PV Line Input Inverter

Blue Planet PVI 5000

KACO GERÄTETECHNIK



Manual

PVI 5000

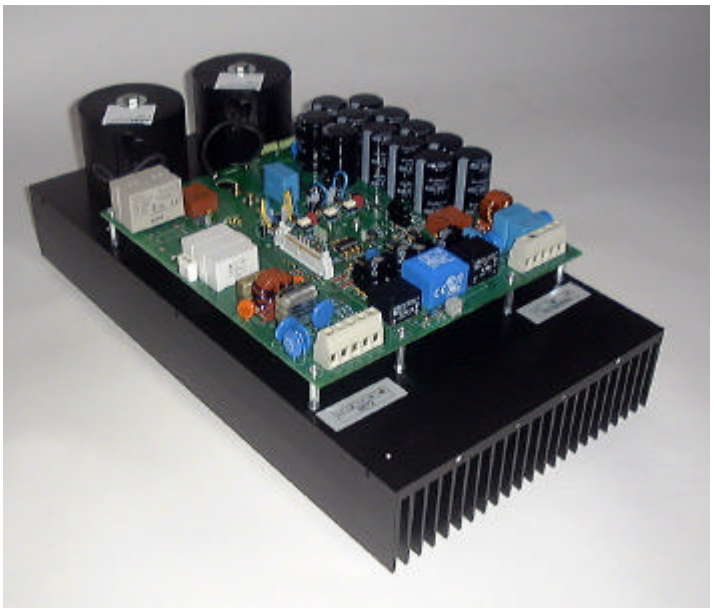

KACO GERÄTETECHNIK GmbH
Gottfried-Leibniz-Str. 1
D-74172 Neckarsulm
Phone +49 7132/3818-0
Fax +49 7132/3818-22
http://www.kaco-geraetetechnik.de
Email: info@kaco-geraetetechnik.de

Status: March 2003

Safety Information

Installation and maintenance of these inverters must be performed by skilled personnel only. Lethal voltages are present inside the device - therefore, the device must be opened by skilled electricians or your responsible dealer only.

Hazardous live voltages may be present even if the device has been disconnected. This manual describes how to operate and handle the device properly. Therefore, please read this manual carefully before putting it into operation.

PV Line Input Inverters

Blue Planet PVI 5000

KACO GERÄTETECHNIK

Table of Contents:

1. Introducing KACO GERÄTETECHNIK 5

2. Short Description of Blue Planet PVI 5000 6

3. Principle of Blue Planet PVI 5000 Functions 7

3.1. Description of Components 8

3.2. Protective Functions 10

4. Inverter Installation 11

4.1. General Information about the Place of Installation 11

4.2. Mechanical Dimensions 13

5. Electrical Connections 14

5.1. General Information 14

5.2. Line connections 15

5.3. PV Generator connections 16

5.4. Multi-Contact Connectors used as DC Separators 17

6. Inverter Operation 18

6.1. Starting-Up the Inverter 18

6.2. Switching-Off the Inverter 19

6.3. Display Operation and Settings 20

6.4. Changing Inverter Parameters 27

6.5. Operation of the RS232 Interface 32

7. Technical Data PVI 5000 35

8. Blue Planet as Part of a PV Installation 38

8.1. Setup 38

8.2. Multi-inverter installations 41

8.3. Selection of solar modules for the solar generator 43

8.4. Orientation of the solar generator 45

8.5. Acceptance of PV installations and documents required by the Electrical Supply company 46

9. EU Declaration of Conformity 47

10. Factory declaration for "Independent Power Generating Plants on low-voltage grids" 49

11. Diagrams 50

11.1. Degree of Efficiency 50

11.2. Delivered Current 50

11.3. EMC Measurements 51

11.4. Typical Daily Yield 53

12. Guarantee and Service 54

13. Troubleshooting and Fault Diagnostics 56

13.1. Troubleshooting 56

13.2 Transport damages 59

14. Status Protocol 60

1. Introducing KACO GERÄTETECHNIK

Device Technology is a powerful partner for system solutions in the field of current inverters and power electronics.

Our location at Heilbronn has been developing, designing and manufacturing current inverters and power electronics for more than 60 years.

Our capable and efficient development and projecting team will meet all your specific demands and ensure very fast response to your queries.

History:

- Founded in 1914 under the name of "Kupfer-Asbest-Company Gustav Bach" (KACO), our company was Germany's first special factory that produced ring gaskets used in the automotive industry.

- In 1927, the product range was extended by electrotechnical products, and it has permanently been enhanced and expanded since that date.

- By 1970 the electrotechnical division had grown significantly and was transferred to a separate company - Bach & Co. KACO Elektrowerk.

- In 1991, the company name was changed to KACO ELEKTROTECHNIK Bach GmbH + Co.

- In 1996, the company, whose name meanwhile had been changed to KACO ELEKTROTECHNIK GmbH, joined the American Danaher Corporation of Washington, DC. focused on

- On 1 January 1999, the strongly expanding Gerätetechnik Profit Center focussed on inverter technology and power electronics was re-established as an independent company under the name of KACO GERÄTETECHNIK GmbH.

2. Short Description of Blue Planet PVI 5000

With Blue Planet PVI 5000 the successful family of KACO photovoltaic line input inverters is now also available with a performance range up to 6.4 kWp.
Its essential features are summarized below:

- Continuous AC output 5.2 kW
- AC peak power 6.0 kW
- Working without transformer
- Soundless
- Degree of efficiency > 95%
- Lightweight: only 28 kg
- Small dimensions
- Extremely easy to install by means of a mounting panel
- Input voltage range 350 to 750 VDC
- MPP range: 350-600VDC
- RS232 interface as a standard
- VDEW conformance
- Optional remote Internet monitoring
- LCD display showing the following operational data (permanent access):

Solar generator voltage	Date and hour
Solar generator current	Daily yield
Mains voltage	Annual yield
Delivered current	Total yield
Delivered power	Daily operating time
Daily peak output	Annual operating time
Temperature inside device	Total operating time
Operating status	

Our name obliges. For more than 60 years, KACO Gerätetechnik has been developing and manufacturing a variety of different current inverter types and techniques at its location in Heilbronn/Germany. High product quality and longevity are our hallmark.

3. Principle of Blue Planet PVI 5000 Functions

The principle of inverter functions is shown in Figure 1.

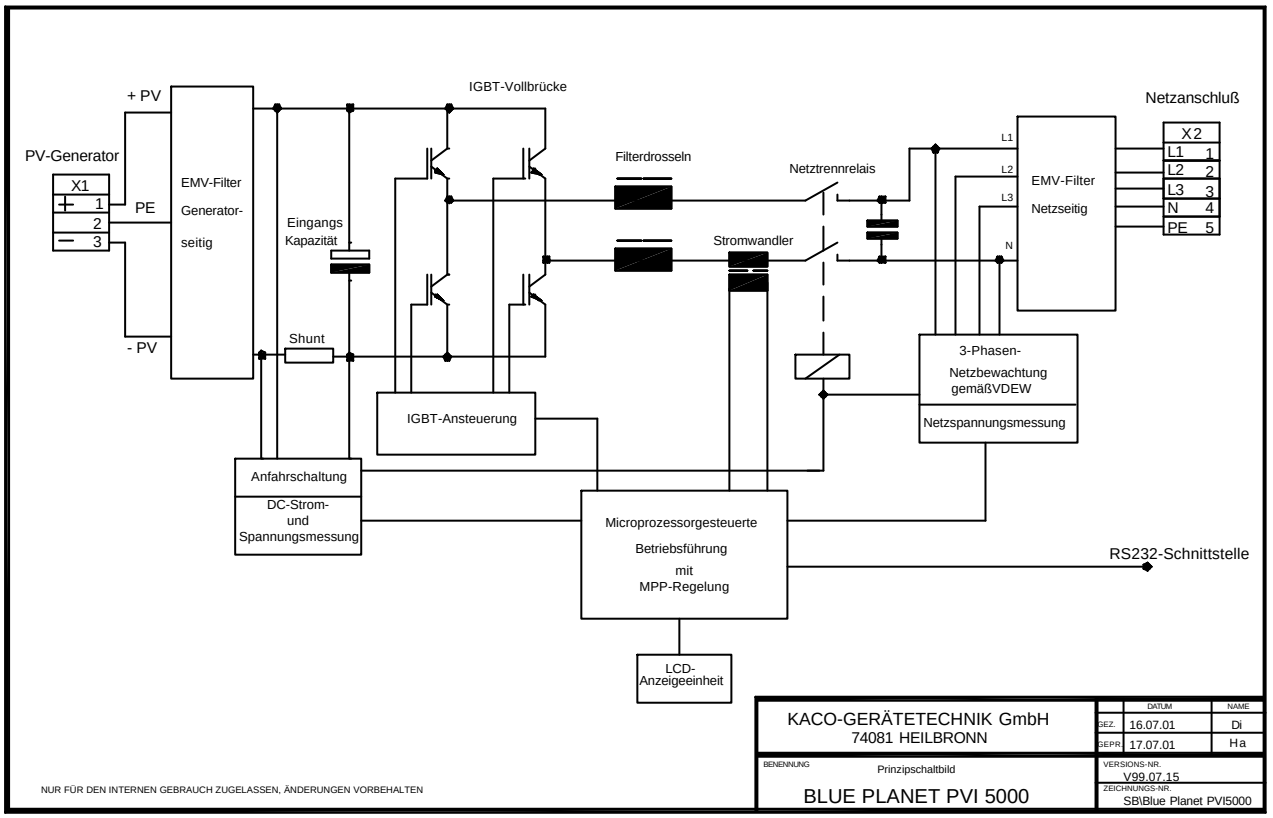

Fig. 1 Principle of Blue Planet PVI 5000 Functions

EMV-Filter, generatorseitig	EMC-Filter, generator side
Eingangskapazität	Input capacity
IGBT-Vollbrücke	IGBT Full Bridge
Filterdrosseln	Inductors
Netztrennrelais	Mains isolation relays
Netzanschluss	Mains/line connection
3-Phasen-Netzbewachung	3-phase mains monitoring
Netzspannungsmessung	Mains voltage measurement
Anfahrschaltung	Start-up circuit
DC-Strom- und Spannungsmessung	DC current and voltage measurement
Mikroprozessorgesteuerte Betriebsführung mit MPP-Reg.	Microprocessor-controlled operation with MPP regulation
RS-232-Schnittstelle	RS232-Interface
LCD-Anzeigeeinheit	LCD Display unit
Prinzipschaltbild	Basic circuit diagram

3.1. Description of Components

EMC Filters
Specially adapted discrete EMC filters are integrated on the board (generator and mains side). These filters ensure compliance with EMC standard threshold values. Due to their high performance there is no need to use ready-made standard line filters. An excerpt of EMC measurements is shown on page 48, Chapter 11.3 - EMC Measurements.

Input Capacities
The inverter works under high insolation conditions and according to a patented MPP algorithm, which ensures highest adaptive degrees of efficiency. This MPP algorithm is based on the voltage and current ripple on the DC side. This high-performance MPP tracker requires an appropriately dimensioned input capacity on the generator side, which has been implemented with special snap-in electrolytic capacitors for Blue Planet.

IGBT Full Bridge
The IGBT full bridge is composed of individual discrete IGBT semiconductors, which are triggered via optocouplers. A special protective circuit ensures that the IGBT components are not damaged even under extreme operating conditions. High-quality semiconductors ensure fast switching times and minimized loss in throughput.

Line Power Inductors
Line power inductors ensure that the delivered current is sinusoidal. These inductors are manufactured in a special process, and their special design guarantees an excellent efficiency degree of the inverter.

Line Power Disconnection
A VDE-approved relay ensures safe disconnection from line power during night shutdown and in the event of failures. The relay meets the requirements for line power disconnection, i.e. a contact spacing of 3 mm.

Start-up Circuit
The start-up circuit monitors the DC voltage of the solar generator and ensures that the inverter “goes to sleep“ at night and “wakes up“ again when the sun rises. In this way, the inverter does not use any mains power during the night shutdown period. Starting from a generator voltage of approx. 310V, the start-up circuit enables the inverter controls and

changes over to a self-holding mode, which avoids any additional load on the generator. Power delivery starts at a generator voltage of approx. 410V.

DC-Voltage and Current Measurement

The generator current and voltage are recorded by a precise measurement circuit. These values are the input values for controlling the delivered current. The generator voltage and generator current values can be read off the integrated display.

Line Power Monitoring

A VDEW-compliant (VDEW = German Association of Power Generating Plants) 3-phase line power monitoring system is integrated in the inverter. This system monitors the voltage of all three phases and disconnects all inverter poles in the event of a line power failure, overvoltage or low voltage condition. As soon as line power has recovered and is within the permissible tolerances again the inverter automatically resumes its operation after completing the start-up routine.

Microprocessor-controlled Guided Operation

The inverter offers a variety of functions.
The analog current regulator provides very fast response to line fluctuations and harmonics of the line voltage. It obtains its nominal values from the MPP tracker (amplitude) and the current line voltage (curve shape). The cos ϕ value of 0.985 is far better than required by law.
The MPP tracker, which is designed in digital technology, uses the line-induced ripple of the generator voltage and, therefore, works without continuous search movements, thus ensuring a very high degree of adaptability.
Guided operation is based on a high-performance 8-bit micro-controller. C-language and an advanced real-time operating system have been used for programming the controls. Therefore, the program can be expanded and the inverter can be adapted to new tasks very easily. The possibility of assigning a variety of priority levels allows safe simultaneous operation of the user interface, serial interface, and power delivery operation.

LCD Display

By means of 2 keys and a dual-line display, users can retrieve information about the actual operating status or stored data (yield and operating times). The only entry that is required is the date and hour (if the system is installed for the first time or has not been used for an extended period of time – please refer to Chapter 6.3, Display Operation/Settings).

Serial Interface

An electrically isolated serial interface transfers operating data to a computer (e.g. notebook) and allows further individual processing with conventional spreadsheet programs. More

details about the data format, connections and data processing are given in Chapter 6.5, “Operation of the RS 232 Interface“.

3.2. Protective Functions

The following monitoring and protective functions are integrated in the inverter:

1. Generator-side overvoltage dischargers/varistors as lightning protection.

2. 3-phase line power monitoring to protect against the risk of personal injuries and the development of an “island effect“ (isolated mains).

3. Overvoltage dischargers/varistors to protect the power semiconductors against high-energy line transients.

4. Heat sink temperature monitoring.

5. EMC filters to protect the inverter against RF line interference.

6. Line input varistors to ground – to protect the inverter against burst and surge pulses.

4. Inverter Installation

4.1. General Information about the Place of Installation

The overall planning of a PV installation should include a suitable inverter location.
Below is a summary of the most important criteria to be observed for an optimal installation site:
Criteria for optimum inverter location:

- Wall assembly in indoor areas
- Do not directly expose the inverter to wetness or humidity
- Note that less current flows on the generator side than on the mains side.
- Installation at eye-level makes it easier to read the display and LCD.
- Ensure accessibility for assembly or service work
- Provide a minimum clearance of 200 mm above the case, i.e. to other devices, cabinets, ceiling, or similar.
- Ensure free air circulation around the case/enclosure and through the heat sink.
- If Blue Planet PVI 5000 is installed in a switch cabinet or similar, ensure that heat is carried-off sufficiently, e.g. by means of forced ventilation.
- The heat sink can reach a temperature of more than 80°C.

Please note:
Due to the high system voltage, the current flowing on the DC side is lower than that on the AC side.
Therefore, power losses on the AC side are higher than on the DC side although cable cross-sections are the same. For this reason and due to thermal aspects, the inverter should be placed in the vicinity of the power meter.

Important:
Depending on the type of wall you should use the appropriate screws and dowel pins for fastening Blue Planet PVI 5000. Conventional dowel pins and screws are usually appropriate for safe fastening of the inverter.

Data referring to the place of installation:

Admissible relative air humidity	:	Less than 95%
Admissible ambient temperature	:	0 ... +50°C
Protection	:	IP21
Case/enclosure material	:	Aluminum

The case/enclosure is solely made of lightweight aluminum. Therefore, there is no risk of corrosion.

An IP 65 version of this inverter has not been provided for the following three reasons:

1.) Good air circulation ensures low operating temperatures of the inverter and, consequently, a longer useful life of its electronic components. IP65-type enclosures are hermetically sealed, which results in higher interior temperatures as compared to IP20 enclosures, and which would reduce the mean useful life of these components.

2.) The condensation water problems stated with IP65 enclosures are not found with IP20 enclosures. Due to the fact that they are hermetically sealed, IP65 inverters must be “drained“ regularly, i.e. a water drain/outlet must be provided.

4.2. Mechanical Dimensions

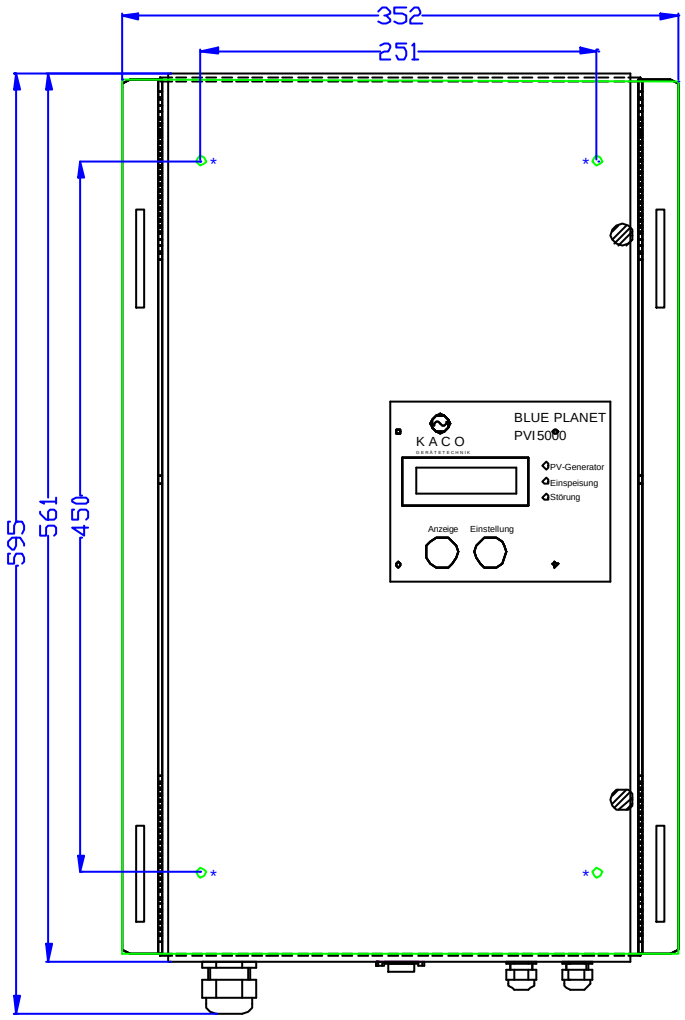

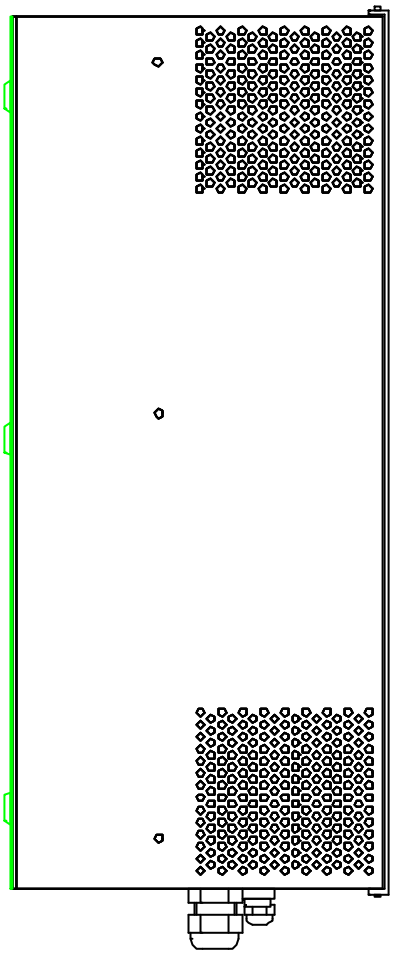

* BEFESTIGUNGSBOHRUNGEN AUF MONTAGEPLATTE
(DURCHM. 6mm)

PVI-5000.dwg

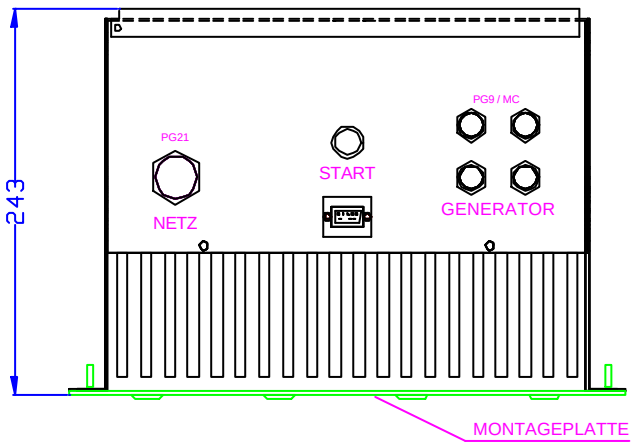

5. Electrical Connections

5.1. General Information

The electrical connections can be established after Blue Planet PVI 5000 has been installed in its fixed location.
The electrical installation of Blue Planet PVI 5000 must only be performed by skilled personnel and by an electrician who has been approved by the responsible Electrical Supply Company. All applicable safety instructions, technical connections stipulated by the responsible Electrical Supply Company, and the relevant VDE regulations must be adhered to.

The PV generator connections and line power connections are implemented by means of PCB terminals in the connection box of the inverter. Open the device door, which is secured by means of two recessed-head screws on the right side of the housing. PV generators for devices that are provided with multi-contact plugs (MC option) are connected as described in Chapter 5.4. multi-contact plugs used as DC separators.

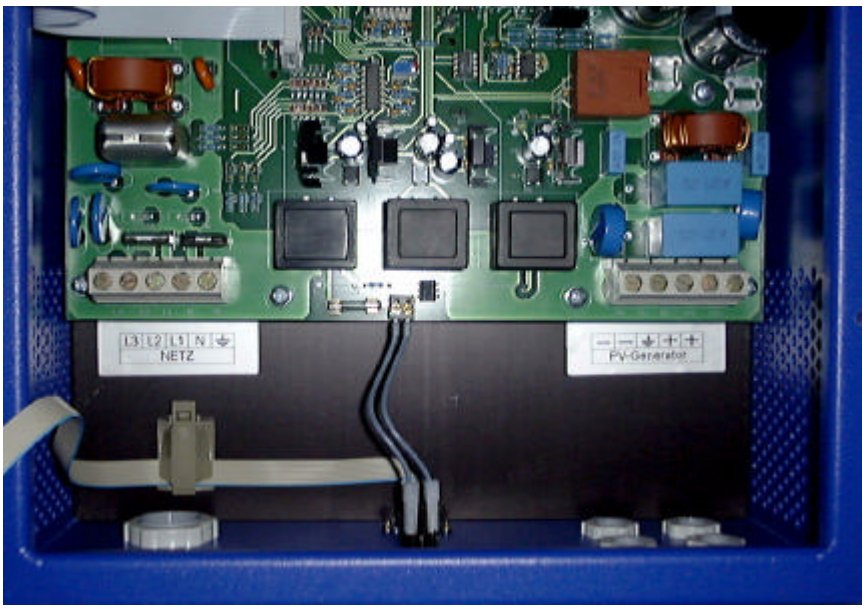

Fig. 2 Connection Box of Blue Planet PVI 5000

The electrical connections of Blue Planet and the connection of DC and AC voltages must be performed in the sequence described below.

5.2. Line connections

5-lead connections are used (L3, L2, L1, N, PE).
PG fittings (PG16) are provided at the underside of the enclosure for inserting the wires.

We recommend wire cross sections of 6 mm^2 (example: NYM-J 5 x 6 mm^2). Wire cross sections of 4 mm^2 (example: NYM-J 5 x 4 mm^2) or 10 mm2 (example NYM-J 5x10 mm^2) can also be used.

According to VDE 0100 Part 430 "Protection of cables and lines in the event of overcurrent", NYM lines should be protected as follows (fixed wiring, ambient temperature 25 °C and installation type B2 (multi-wire lead in a tube or channel on or inside walls or buried):

4 mm^2 $\Rightarrow$ 25 A
6 mm^2 $\Rightarrow$ 35 A
10 mm^2 $\Rightarrow$ 50 A

NEOZED melt fuses of the type gL should be used.
All further components required for line power connection are described in Chapter 8: Blue Planet as Part of a PV Installation.

Please make sure to use sufficiently wide wire cross-sections to avoid excessive line impedance (internal resistance of the electrical grid) between the domestic distribution and the respective Blue Planet installation. The impedance value is calculated by adding the line impedance value of the domestic connection to all resistance values of the remaining leads and terminals.

At a high mains impedance, i.e. long AC-side leads, the voltage at the line terminals will increase during power delivery. This voltage is measured by the inverter. If the voltage at the line terminals exceeds a defined limit (default: 264V), the inverter switches off due to mains overvoltage. This condition must by all means be taken into consideration for dimensioning the AC lead.

Before inserting the line power lead into the device, please check that it does not carry voltage.
Insert the unshielded and stripped lead through the PG21 fitting. Connect the stripped lead according to the marking on the left PCB terminal.
Check that all connected leads are firmly seated.
Tighten the seal of the PG21 fitting.

5.3. PV Generator Connections

The PV generator leads are connected on the right side of the connection box.
Important: Ensure correct polarity by all means. For devices with multi-contact plugs, please observe the instructions given in Chapter 5.4, multi-contact plugs used as DC separators.

To obtain maximum safety and protection against hazardous live voltages during the installation of PV systems, the positive and negative leads must be strictly isolated from earth potential (PE). Prior to installing the PV generator to the Blue Planet unit, please check that the PV generator installation is free from possible ground faults:

1.) Determine the DC voltage between protective earth (PE) and the positive lead or, respectively, between the protective earth (PE) and the negative lead of the PV generator. If stabilized voltages values can be measured, this indicates a ground fault in the PV generator or generator wiring. The ratio between the measured voltages indicates the location of this fault. Make sure to remedy this fault prior to performing any further measurements!

2.) Determine the electrical resistance between the protective earth (PE) and the positive (plus) lead or, respectively, between the protective earth (PE) and the negative (minus) lead of the PV generator.

    A low resistance value (< 2 MΩ) indicates a high-resistance ground fault of the PV generator, which must by all means be remedied prior to further installation!

3.) Before connecting the DC leads to the inverter terminals the voltage of the solar generator must be measured. DC voltage must be 750 VDC maximum. Connecting a higher voltage will destroy the device!

Please read the following Chapter when using multi-contact plugs!

5.4. Multi-Contact Connectors used as DC Separators

A DC separator is required in photo-voltaic installations for safe separation of the solar generator from the inverter. This separator may be in the form of multi-contact connectors.

Connecting multi-contact plugs for Blue Planet PVI 5000 with MC option:

1. Insert the free end of the multi-contact connector into the PV generator lead. The positive (plus) socket and socket insulation must be fitted into the positive lead of the PV generator. The negative (minus) connector and plug insulation are fitted into the negative lead of the PV generator.
2. Connect the appropriate male and female plugs.

Safety information concerning the use of Multi-Contact Connectors:

Disconnecting the PV generator from the Blue Planet PVI 5000 (i.e. pulling the connector cord) must NEVER be performed under load, i.e. NEVER during the inverter's power delivery operation. Always make sure to disconnect the system from mains supply by de-activating the mains fuses.

(Otherwise the plug-in connections might be damaged due to arcing,
and both parts of the respective damaged connector must be exchanged).

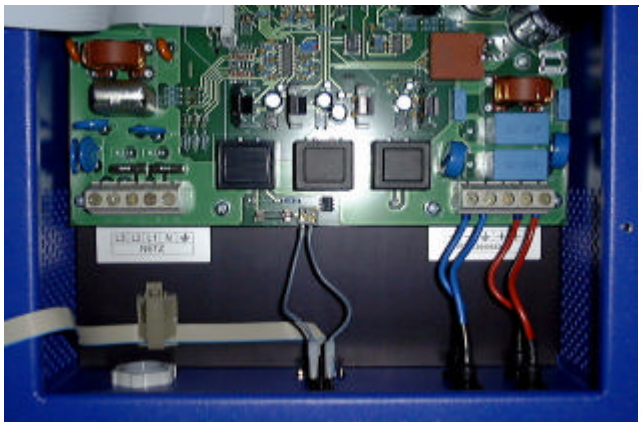

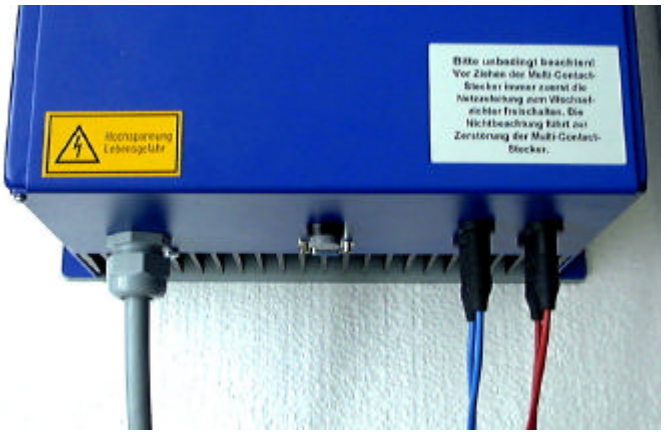

IMPORTANT:
Before disconnecting the multi-contact plugs, ALWAYS disconnect the mains line to the inverter to avoid destruction of the multi-contact connectors.

6. Inverter Operation

6.1. Starting-Up the Inverter

After completing the mechanical and electrical installation of the inverter (see Chapter 4, Inverter Assembly, and Chapter 5, Electrical Connection of the Inverter), you may now put the inverter into operation as follows:

IMPORTANT! The inverter can only be put into operation under daylight conditions (i.e. at a solar generator voltage of > 310 V).
If no daylight or solar generator voltage is present, the inverter can be activated by pressing the gray key (see Chapter 6.3 Operating the Display and Settings), but normal operation will not be possible in this condition.
(Only the values can be read off the display).

1. Switch on the line voltage (via the external automatic safety breakers).

2. Switch-on the solar generator via the DC circuit breaker (or multi-contact connector).
   Response: the green LED “PV generator“ is illuminated (if the generator voltage is greater than 300V). The display shows the start message: “PV 5000-Vxxx."
   After approx. 2 seconds, the display changes and the current generator voltage is measured: “Start from 410 V; measurement xxx V.“ If the measured voltage is greater than 410V, the device will start power delivery after approx. 2 – 3 minutes. This starting-up period of 2-3 minutes is necessary to ensure that the generator voltage is permanently above the power delivery limit of 410V.
   A quick-start routine is provided for test purposes – this routine circumvents the start-up period. This quick-start is menu-controlled and obtained from the set-up mode (see Chapter 6.3, Display Operation and Settings).

3. During the normal start-up procedure the line power relay is switched on after approx. 3-4 minutes (audible acoustic noise), and power delivery is started. This is also signaled by the green “Power Delivery“ LED. The display now shows the delivered power. The “Display“ key can be used to indicate the various measurement values (see Chapter 6.3, Display Operation and Settings).

4. It may be necessary to reset the date and hour (please refer to Chapter 6.3, Display Operation and Settings).

5. The inverter is now fully in operation.

6.2. Switching-off the inverter

1.) Switch off line voltage (de-activate the external automatic safety breakers).

2.) Check that the line power terminals of the inverter do no longer carry voltage.

3.) Switch-off the solar generator by means of the DC circuit breaker (or, respectively, multi-contact connector).

Attention! Especially when using multi-contact connectors, the sequence described above must be followed very carefully, as otherwise there is a risk of arcing, which may destroy the connectors.

Attention – Lethal Hazard! Hazardous Live Voltage can be present in the inverter even if the electrical connections have been switched off.

Please wait for three minutes before accessing the inverter.
If you have to carry out any work on the solar generator, you must additionally disconnect all connections of the DC main switch (or, respectively, the multi-contact connector) – it is not sufficient to switch off the line voltage in this case!

6.3. Display Operation and Settings

General Information:

In the normal operating mode you will only need the '**Display**" key to toggle between the individual measuring values and data. The "Set" key is required for setting the date and hour and to select the quick-start routine and clear the internal power meter of the inverter.

Display Screen and Operation:

After starting-up the inverter (see Chapter 6.1, Starting-Up the Inverter), various measuring values and data are shown on the display. Use the "Display" key to toggle between the different values and data. Keep the "Display" key pressed until the next value is shown. If the Display key on the inverter has not been in use for an extended period of time, the display will automatically indicate the currently delivered power. The following values and data may appear on the display:

No.	Display Message	Explanation
1	Blue Planet PVI 5000-Vxxx	Start message, which appears after starting-up the device. Shows the type of inverter and software version.
2	Start measurement from 410V xxx V	Display shown during the starting-up period (in the morning), after a malfunction or prior to night shutdown. **No power delivery** in this mode of operation. The inverter waits until the voltage has exceeded a value of 410 V. If this value has been exceeded for more than 3-4 minutes the power delivery is started. An audible sound is generated when the mains isolation relay is enabled.
3	Solar generator voltage xxx V	Actual voltage of the solar generator connected to the inverter. Shown in volts; tolerance ± 3%
4	Solar generator current xxx A	Actual current supplied to the solar generator by the inverter. Shown in amps; tolerance ± 5% at rated power. Greater tolerances are possible when smaller generator currents are displayed.

No.	Display Message	Explanation
5	Line voltage xxx V	Actual line voltage (measurement of the phase into which power is delivered); displayed in volts; tolerance: ± 2%
6	Line current xxx A	Actual current that is fed into the mains. Displayed in amps; tolerance: ± 3%
7	Delivered power xxxx W	Power that is currently fed into the mains. Displayed in Watts.
8	Daily peak capacity xxxx W	Short-term peak delivery capacity of the day, displayed in W.
9	Temperature inside the device	Display of the actual heat sink temperature, in °C. The inverter limits the power delivery if the temperature exceeds 65°C. If the device temperature exceeds 80°C it will be switched off automatically.
10	Status: 1.) Power delivery operation 2.) Waiting for start-up 3.) Waiting for shut-down 4.) Power limitation 5.) Overload 6.) Overvoltage 7.) Line voltage failure	Display of the various operating statuses: 1.) Normal delivery operation. Power is fed into the mains. 2.) Waiting for sufficient solar generator power. The generator voltage is not sufficiently high for power delivery, or the power delivery process was stopped and the system is re-started after a failure. 3.) Waiting for night shutdown. The generator capacity is no longer sufficient for power delivery, and the device waits for the night shutdown. 4.) Device has heated up excessively during operation and limits the delivered power until it has cooled down again. 5.) The connected solar generator supplies excessive power. 6.) The connected solar generator supplies excessive voltage. 7.) Line voltage failure prevents proper power delivery operation. The display shows which phase is disturbed (overvoltage or low voltage).

No.	Display Message	Explanation
10	Status (Continued) 8) Device switches off	Device changes to night shutdown
11	Date: xx.xx.2000 Hour: xx.xx.xx	Display of date and hour
12	Yield today: xxxx Wh	Power delivered since sunrise. Display in watt hours (not kWh!!)
13	Annual yield: xxxx kWh	Power delivered during the current calendar year (since January 1st to-date).
14	Total yield: xxxx kWh	Power delivered since the time of inverter start-up.
15	Operating hours today: xx:xx	Today's operating hours since sunrise. Displayed in hours and minutes.
16	Annual operating hours: xx:xx	Operating hours during the past calendar year (since January 1st to-date).
17	Total operating hours: xx:xx	Operating hours since the time of inverter start-up.

Remark:
The display messages 4 and 5 - solar generator voltage and solar generator current, as well as 6, 7 and 8, line voltage, line power and delivered power are shown on the display simultaneously.



Reading the daily values after shutting-down the inverter in the evening:
The device shuts down when it begins to get dark in the evening. After that, there are no further display messages. To read the values of the current day in the evening or at night, you can activate the device by pressing the gray key (see our illustration). Press the key at the underside of the device for approx. 5 seconds until the message is shown on the display. You can now scroll through the menu and view the values of the current day.
If the key is not activated for a period exceeding one minute the device will automatically shut-down again.
The inverter only saves the actual values of the day. After switching-off the inverter these daily values are no longer retrievable. The annual operating hours, total operating hours, annual power delivery, total power delivery, etc. are saved and accumulated. These data will not be lost – even if the device has not been in operation for an extended period of time. However, if the device has not been in use for several days it may be necessary to reset the date and hour.

Please note:
The displayed measuring values, i.e. generator current, generator voltage, mains current, mains voltage, etc. all have a certain tolerance. This will of course affect the values derived therefrom; i.e. delivered power, daily peak capacity and yield data.
The inverter display is designed to monitor the general operation of your system and to provide data about its functionality. However, the actual yield of your PV installation should be determined on the basis of a calibrated power meter, which is provided by your Electrical Supply Company (admissible tolerance of your electric meter: ± 2%).

Attention!
In disturbed mains or installations that have to be disconnected from the grid occasionally due to disturbances, yield data and operating hours may not be displayed properly. This is not an inverter error. Even if such incorrect values are shown the inverter continues to work properly and without any yield loss.
Similarly, disturbed mains may cause inverter shutdowns during the day, although no obvious error has occurred. In this case, the inverter display returns the message “Line Voltage Failure“, and incorrect measurements may be caused as described above. After such shutdown conditions the inverter continues to operate properly.

Accuracy of Measuring Data Acquisition
All measurements and, consequently, all displayed measuring values are subject to tolerances, i.e. measured values do not correspond exactly to actual values. Depending on the specific requirements the appropriate measuring elements and circuits are selected.
The measuring elements and measuring circuits of PVI were selected in a way allowing optimum operation and maximum solar yield. Measuring errors that are within tolerance limits will not reduce the solar yield.

Note: The power meters provided by the Electrical Power Company have an admissible tolerance of ± 2%.

Based on the tolerance values shown in our table above the daily yield displayed on the inverter can deviate from the values of your electrical meter by up to 10-15 %.

Description of LEDs:

PV Generator LED (green):
This LED is illuminated from a generator voltage of approx. 310 V onward and extinguishes as soon as the generator voltage falls below 250 V. The PV generator LED signals that the inverter is in its active state and the inverter controls are enabled. If this LED is not lit up the inverter fails to supply energy. Under normal operating conditions the LED is illuminated in the morning when there is enough daylight, and extinguishes again when it gets dark.

Power Delivery LED (green):
This LED is illuminated when the inverter feeds energy into the mains. To this effect, the generator voltage must first exceed a value of 410 V for 3-4 minutes, ensuring that the PV generator provides enough power. This means that the “Power Delivery“ LED is not lit up unless the PV generator LED is illuminated.
Under normal operating conditions the inverter starts delivering power in the morning and terminates this process as it becomes dark. On cloudy days or during the winter months the power delivery process can be interrupted at certain times, depending on the PV generator and the actual power delivery capacity, and can be resumed again later on. This process can be repeated for several times, especially in the morning and evening.

Disturbance LED (red):
This LED is enabled in the event of the following disturbances:
- Mains overvoltage or low voltage on one of the three phases
- Failure of one of the phases L2 or L3
- Excessive generator voltage
- Excessive generator power
- Shutdown due to excessive temperature
- Device defect.

In general, any of these disturbances will lead to a termination of the power delivery operation. If the cause of the disturbance has been remedied, power delivery will be resumed after a starting-up period of approx. 3-4 minutes.

Exception: Failure of phase L1 (Line phase to which electrical power is fed).
In the event of a failure of the power delivery phase the Disturbance LED is not lit up. In this case, all LED’s and the display are extinguished and the inverter is shut-down completely. Only after the power delivery phase is available again can the inverter resume its normal operation.

Setting the Date and Hour:
To change over to the Set Mode, keep the “Display“ key pressed while simultaneously pressing the “Set“ key.
You have now accessed the Setting Mode in which you can set the actual date and hour.
First press the “Set“ key for several times to adjust the correct hour. Use the “Display“ key to select the minutes and press the “Set“ key until the correct minute is displayed. Press “Display“ again to enter the date, using the same procedure as described above.

Note: Years are set consecutively, i.e. the year is incremented by one and will return to 2001 after the year 2050 has been reached.

If, after setting the date hour, you wish to return to the normal operating mode, keep the “Display“ key pressed while simultaneously pressing the “Set“ key. You have now returned to the starting menu where you can select the various measuring values by means of the “Display“ key.

The Setting mode can also be used for selecting the following parameters:

1.) Output of EPROM data (Key 2): Unique output of internal inverter data for diagnostic purposes via serial interface.

2.) Output of operating data:
Output of operating data via the serial interface. Standard setting: Active.

3.) Clear the power meter: Resets the values shown on the display, i.e. annual operating hours, total operating hours, delivery power per year, total power delivery, etc. (Use the “Set“ key to enter the required code 2).

4.) Quick-start: Start immediately, using key 2 (“Settings“).

Quick Start:
The quick-start routine can be used for test purposes or acceptance tests conducted by your local Electrical Supply Company (EVU). In this case, the inverter is started without any delay within 3-4 minutes.
As described for setting the date and hour, change to the Setting Mode first.
Keep the “Display“ key pressed while simultaneously pressing the “Set“ key.
Using the “Display“ key, scroll through the menu and select the menu item “Start immediately with key 2“. Now press the “Set“ key – the inverter is activated after a short time (with an audible click of the relay), and the green Power Delivery LED is lit up.
If there should not be enough solar generator power the inverter will be shut-down again after a short period of time.

6.4. Changing Inverter Parameters

Various inverter parameters can be changed in a special programming mode.

Attention!!
Changes to inverter parameters must only be performed by qualified personnel! Incorrect settings may result in yield loss or standstill of your installation.

The following parameters can be adjusted:
1. Break threshold of undervoltage protection
2. Break threshold of overvoltage protection
3. Generator starting voltage (i.e. start of inverter input operation)
4. Set generator voltage
5. Set generator current
6. Set line voltage
7. Set line power

Changing to the Programming Mode:
To change to the programming mode the inverter must be disconnected from line voltage. Open the inverter door by loosening the two recessed-head screws on the right side of the door. The inverter control board is located on the rear side of the door. A jumper has to be plugged into another position before you can change into the programming mode - please take note of our illustration below:

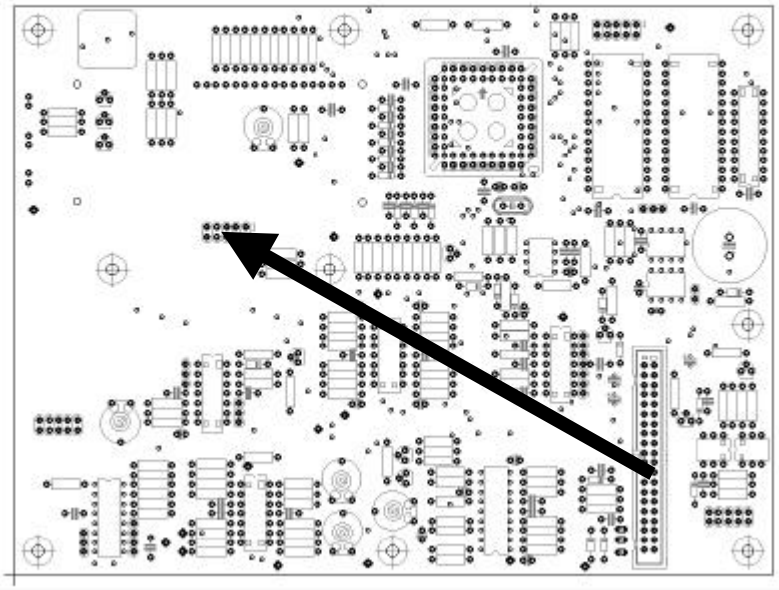

Fig. 4 Jumper position for setting the programming mode

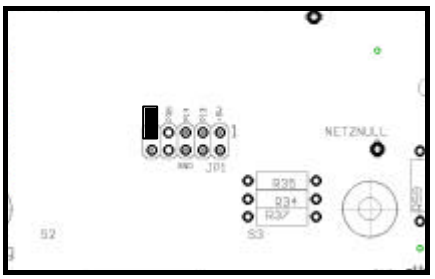

Fig. 5 Jumper position for normal line input operation (delivery status)

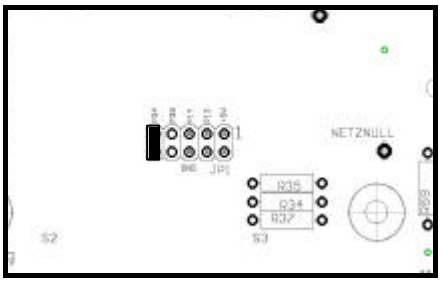

Fig. 6 Jumper position for programming mode

Plug the jumper into the new position as shown in our illustration. Close the inverter door and start-up the inverter.

To change to the programming mode keep the "Display" button pressed and simultaneously press the "Set" key. After approx. 2 seconds, the display should read "MINIMUM LINE VOLTAGE 164V". You are in the programming mode now.

Changing the settings:
Use the "Display" key to scroll through the various menu options. Use the "Set" key to change parameters as needed. If you have reached the end of the menu the display will revert you automatically to the first menu item again.

After you have completed all your parameter changes you must use the "Display" key to scroll to the menu option "Write parameters: No". Use the "Set" key to change this option to "Write parameters: YES". Now use the "Display" key to enter your changes.

On completion of these changes the inverter must be reset to its original status. To do this, disconnect the inverter and set the jumper back to its original position. After that, the inverter can be operated "normally" with the new parameters and will not require any further attention.

Description of parameters:

Minimum voltage break threshold

The inverter is equipped with a 3-phase monitoring according to the VDEW directive (*Association of German power generating plants*). If line voltage should fall below a defined value the inverter must terminate its input operation and disconnect from the mains. According to this directive the defined value can be 1.0-fold to 0.7-fold the line voltage value (161V …230V). Under standard operating conditions the inverter shuts down at 164V and is thus within the permissible range. Under special circumstances your Electrical Supply company can request that the inverter shuts down at a different voltage - in this case you can use the menu item "Minimum line voltage" to set the new break threshold.

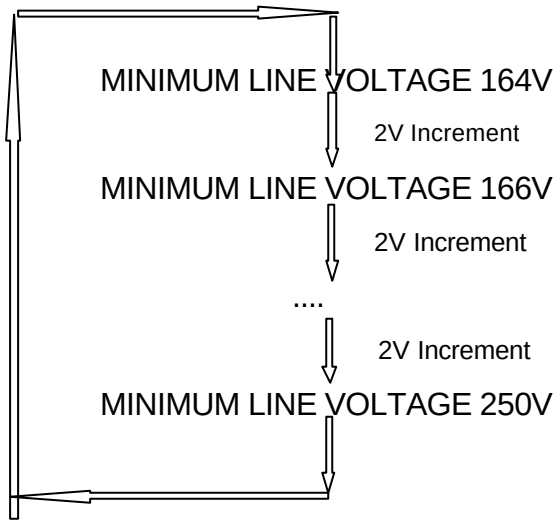

Overvoltage break threshold

The inverter is equipped with a 3-phase monitoring according to the VDEW directive. If line voltage should exceed a defined value the inverter must terminate its input operation and disconnect from the mains. According to the directive, this value can be the 1.0-fold to 1.15-fold of the line voltage value (230V .... 265V). Under standard operating conditions the inverter shuts down at 164V and is thus within the permissible range. Under special circumstances your Electrical Supply company can request that the inverter shuts down at a different voltage - in this case you can use the menu item "Maximum line voltage" to set the new break threshold.

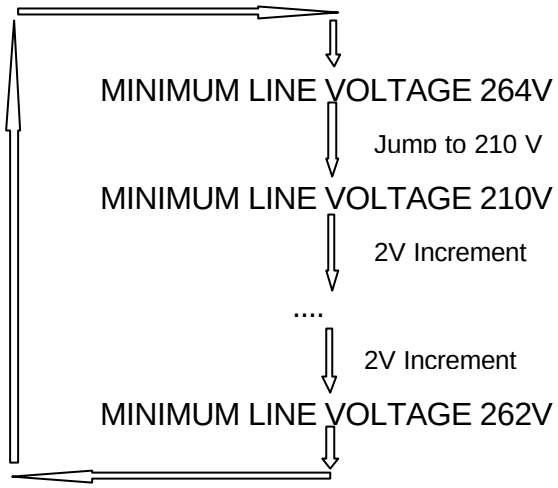

Generator starting voltage (start of inverter input operation)

The inverter starts its input operation at sunrise in the morning from a voltage of 410 V on (Display: Start from 410 V). This setting ensures safe operation of all solar generator configurations. It may be useful in exceptional cases to adjust this starting voltage threshold. In case of low generator voltage (i.e. only few modules connected in series) the starting voltage may be reduced to ensure safe startup even at unfavorable weather conditions. In the case of high generator voltage (many modules connected in series) the starting voltage can be increased to prevent the inverter from being switched on and off too often during startup at low power.

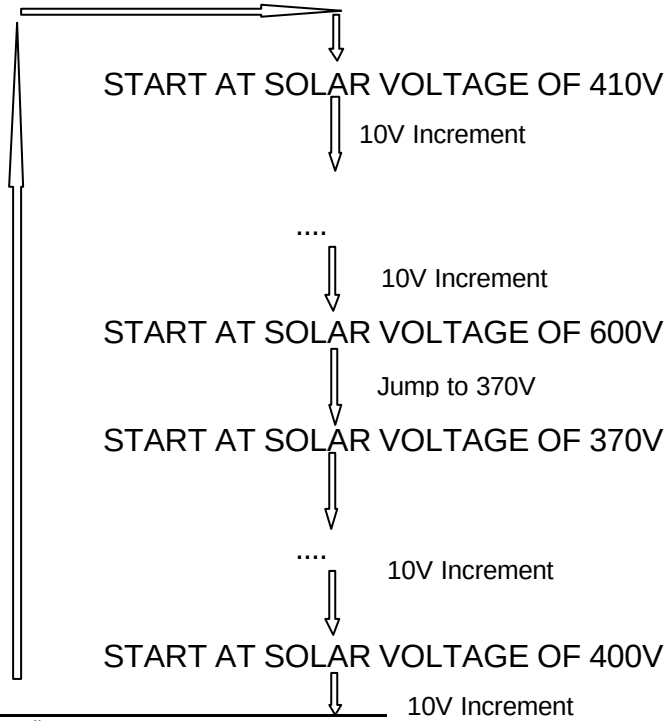

Set Generator Voltage

Prior to shipment all the displayed values are checked and adjusted in our factory. If the generator voltage shown on the display should not correspond to the generator voltage actually measured the value can be adjusted. If the generator voltage shown on the display is too low, you can use the menu item "SCALE SOLAR VOLTAGE +" to increase the value. If the generator voltage shown on the display should be too high you can use "SCALE SOLAR VOLTAGE -" to reduce this value.

Set Generator current

Prior to shipment all the displayed values are checked and adjusted in our factory. If the generator current shown on the display should not correspond to the generator current actually measured the value can be adjusted. If the generator current shown on the display is too low, you can use the menu item "SCALE SOLAR CURRENT +" to increase the value. If the generator current shown on the display should be too high you can use "SCALE SOLAR CURRENT -" to reduce this value.

Set line voltage

Prior to shipment all the displayed values are checked and adjusted in our factory. If the line voltage shown on the display should not correspond to the line voltage actually measured the value can be adjusted. If the line voltage shown on the display is too low, you can use the menu item "SCALE LINE VOLTAGE +" to increase the value. If the line voltage shown on the display should be too high you can use "SCALE LINE VOLTAGE -" to reduce this value.

Set mains current

Prior to shipment all the displayed values are checked and adjusted in our factory. If the mains current shown on the display should not correspond to the mains current actually measured the value can be adjusted. If the mains current shown on the display is too low, you can use the menu item "SCALE MAINS CURRENT +" to increase the value. If the mains current shown on the display should be too high you can use "SCALE MAINS CURRENT -" to reduce this value.

6.5. Operation of the RS232 Interface

A common serial interface cable is suitable for connecting the inverter to a PC. However, the cable length should not exceed 20 m.
Inverter data is transmitted via the serial interface (unidirectionally, text only; no error checks). Below are a few example rows of data transmission:

Column 1	2	3	4	5	6	7	8	9	10
04.10.2001	16:55:30	4	363.8	0.37	134	226.1	0.53	103	23
04.10.2001	16:55:40	4	366.0	0.39	142	226.1	0.53	112	23
04.10.2001	16:55:50	4	359.5	0.41	147	226.1	0.53	116	23
04.10.2001	16:56:00	4	369.8	0.42	155	226.1	0.58	118	23
04.10.2001	16:56:10	4	377.0	0.43	162	226.1	0.63	131	23
04.10.2001	16:56:20	4	373.6	0.45	168	226.1	0.63	133	23
04.10.2001	16:56:30	4	364.0	0.48	174	226.1	0.68	146	23
04.10.2001	16:56:40	4	364.3	0.49	178	226.1	0.68	146	23
04.10.2001	16:56:50	4	365.9	0.49	179	226.1	0.68	144	23

Explanation of abbreviations:

Column	Explanation	Column	Explanation
1	Date	6	Generator power in W
2	Hour	7	Line voltage in V_{AC}
3	Operating mode/status (see below)	8	Line current, delivered current in A_{AC}
4	Generator voltage in V	9	Delivery power in W
5	Generator current in A_{DC}	10	Device temperature in °C

Explanation of Operating Mode Symbols:

Mode	Explanation	Remarks:
0	Inverter has just switched on	Only after the first start-up in the morning.
1	Waiting mode. Testing the mains and solar voltage	The inverter waits until voltages have stabilized and power delivery can be started.
2	Waiting for shut-down	Insufficient generator voltage and generator power. Condition that precedes the night shutdown.
3	Constant voltage regulator	At the start of the power delivery, constant generator voltage is fed-in for a short time (80% of the measured no-load voltage)
4	MPP tracker; continuous search movement	At times of low insolation, power delivery is effected via the searching movements of the MPP tracker.

Mode	Explanation	Remarks
5	MPP tracker, 100 Hz ripple without searching movement	At times of high insolation, maximum yield is ensured by means of a patented MPP tracker.
9	Troubleshooting operation	Initiated whenever an internal error occurs.
10	High-temperature cut-off	The inverter is automatically cut-off in the event of excessive temperatures (heat sink temperature >80°C) due to continuous overload or a lack of air circulation. Possible causes of overheating can be over-dimensioning of the solar generator, excessive ambient temperature, or inverter defects.
11	Power limitation	Protective inverter function – activated if excessive generator power is delivered or if the heat sink of the device has exceeded 65°C.
12	Overload cut-off	Protective inverter function – protects against excessive generator power.
13	Overvoltage cut-off	Protective inverter function – protects against excessive mains voltage
14	Line power failure (3-phase monitoring)	Protective inverter function. Becomes effective if one of the three line phases have failed, or if the voltage is out of tolerance.
15	Transition to night shut-down	The inverter “goes to sleep“.

Note: Codes that are not listed above are not assigned / are not used.

Data transfer as described above is independent of whether or not a computer has been connected. A status line (see above) will be sent every ten seconds via the RS232 interface. At the end of a workday these 10-second-values can be summarized into a complete "profile" of the day.

The interface of the connected PC or laptop must comply with RS232 interface standard. Some computer manufacturers are not fully compliant with this standard - in these cases there may be problems during data transfer.

Please note that the current and voltage measuring data are subject to the tolerances stated. These data are not suitable for measuring the degree of efficiency or yield, and should only be used to monitor the general functions and operation of an installation.

Data can be transmitted by any available terminal emulation supplied with all types of operating systems. An example is the Hyper-terminal setting under Windows 95, 98, 2000, Xp (found under Programs/Accessories/Communication/Hyperterminal).





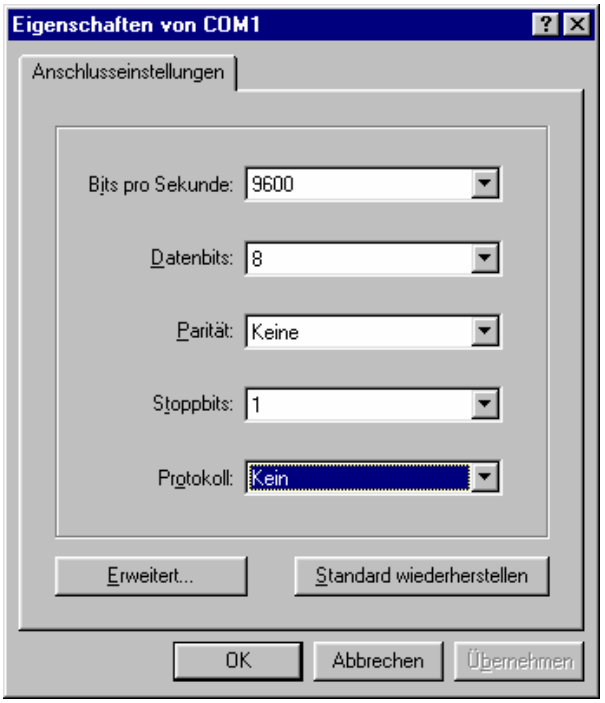

In the CONNECT TO dialog, enter the direct connection via the appropriate serial interface (COM1, COM2, COM3, COM4, etc.), which establishes the connection to the inverter.

After activating the Hyperterminal, start the menu TRANSFER / RECORD TEXT. Enter the path and filename to which data is to be written. (Example: C/OWN FILES/PVI data of 21-10-01.TXT).

On completion of the data transfer you may view the text file "PVI data of 21-10-01.TXT" or import it into a spreadsheet, such as Excel.
The imported data can be further processed in Excel (e.g. for setting up daily curves, etc.).
Also please refer to Chapter 11.4, Typical daily curve.).

As the connected PC has to remain switched-on during the entire input operation we recommend data transfer for technically experienced and interested users or specialist companies only (e.g. for troubleshooting). Continuous data transfer is not recommended due to energy consumption reasons.

7. Technical Data PVI 5000

Input – Electrical Data

Type	**PVI 5000**
DC rated power	5500 W
Max. PV generator power	6400 W
MPP range	350 – 600 V_{DC}
No-load voltage	Up to 750V_{DC}
Monitoring of input voltage	Stand-by starting at U_e>300V_{DC} Night shut-down from U_e<250V_{DC}
DC voltage ripple	< 3%r.m.s.
DC input current	Up to 17.7 A_{DC}
Polarity safeguard	Short-circuit diode
Overvoltage protection	Varistors

Output – Electrical Data

Rated power	5200W
Max. power	6000W
Mains voltage	164 ... 264 V
Rated current	22.6 A
Max. current	26 A
Power factor	≈1
Frequency	50Hz ± 1%
Distortion factor according to VDE0383	<3% at rated power <5% over the entire range

Inverter – Electrical Data

Max. degree of efficiency	95.8%
European degree of efficiency	94.5%
Intrinsic consumption	Night shutdown: 0W Operation: 11W
Min. input capacity /power delivery	40W
Temperature monitoring	>65°C temperature-dependent power adjustment >80°C disconnection from the mains
Circuit concept	Self-contained, transformer-less
Clock frequency	17 kHz
Principle	Single-phase full bridge in IGBT technique
Mains monitoring	3-phase monitoring, VDEW-compliant

Inverter - Mechanical and Technical Data

Optical displays	PV-generator (green) Power Delivery (Input) (green) Disturbance (red) LCD display (2 x 16 characters)
Operating elements	2 keys for display operation
Connections	PCB terminals inside the system/unit Insertion of cables via PG fittings
Temperature	0… +50°C
Temperature monitoring	> 65°C: temperature-dependent power adjustment > 80°: disconnection from the mains
Cooling	Convection cooling
Humidity	0...95%, no condensation
Protection	IP21, according to EN 60529
Noise emission	< 35dB (noiseless)
Enclosure	Aluminum wall housing
Dimensions W x D x H	Approx. 355 x 555 x 235 mm
Weight	28 kg

Standards and Regulations

Protection Class of the device: 1 (Basic insulation + PE connection) Protection Class of connected modules: 2
VDEW Conformance (*VDEW = Association of German Power-Generating Plants*): According to the guideline of the Association of Power-Generating Plants: Parallel operation of photovoltaic power generating plants; guidelines for the parallel operation of independent power generating plants on the low-voltage grid of Electrical Supply Companies 4th Edition 2001.
EMC test procedures according to EN50081-1:1992, EN50082-1:1997 Emitted Interference: EN 55014-1:1993 Interference immunity: EN55014-2: 1997 Harmonic currents: EN61000-3-2: 1995 Voltage fluctuations + flicker: EN 61000-3-3: 1995 Semiconductor inverters: EN 60146 Part 1-1: 1994; EN60146-1-3: 1994
CE marking according to Directive 93/68/EWG Including: Low-voltage directive for electrical operations according to Directive 71/23/EWG Electromagnetic compatibility according to Directive 89/336/EWG

8. Blue Planet as Part of a PV Installation

8.1. Setup

An example of the setup of grid-coupled PV installation with Blue Planet PVI 5000 is shown in our following unipolar circuit diagrams.

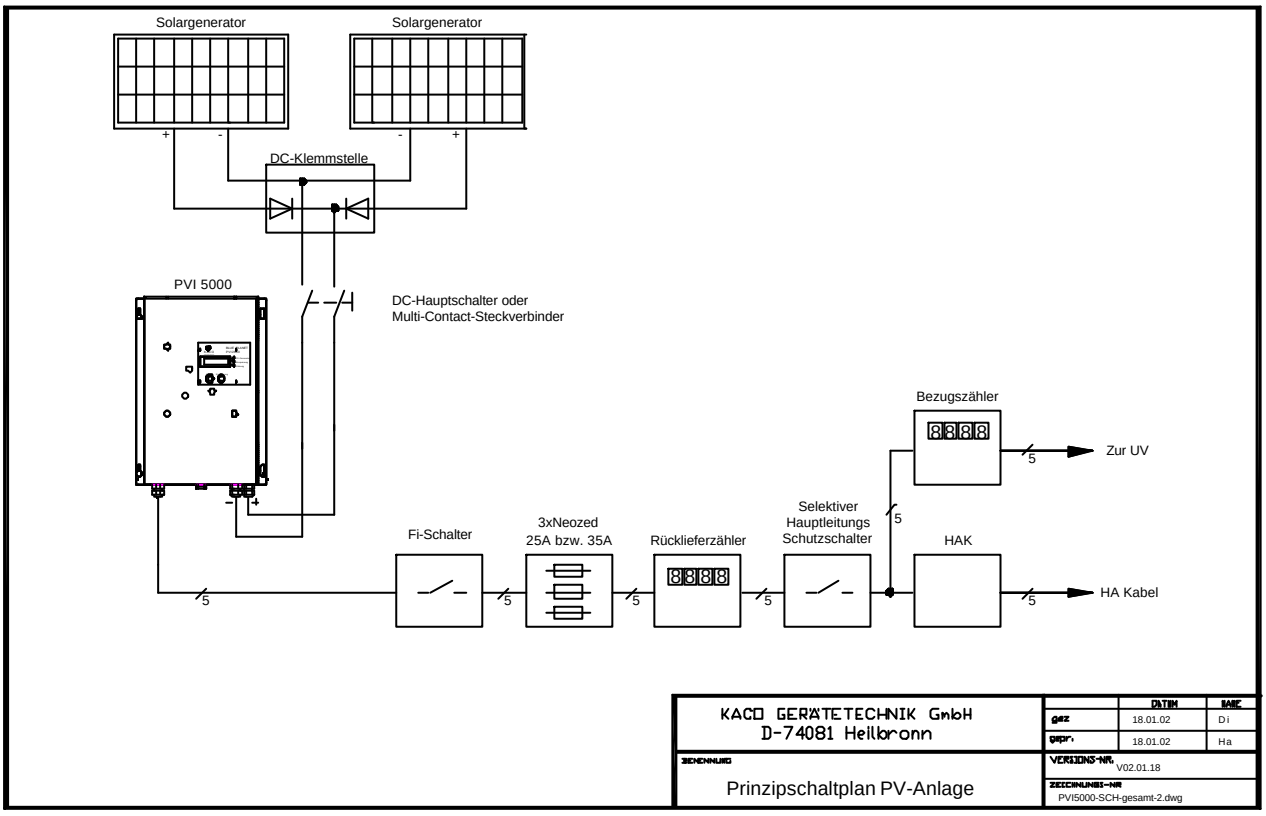

Fig. 7 Unipolar Circuit Diagram for a single-inverter installation

DC-Klemmstelle	DC terminal
DC-Hauptschalter oder Multi-Contact-Steckverbinder	DC main switch or multi-contact connector
FI-Schalter	Circuit breaker
Rücklieferzähler	Return delivery meter
Selektiver Hauptleitungs-Schutzschalter	Selective mains line circuit breaker
Bezugszähler	Reference meter
Zur UV	To UV
HA Kabel	HA cable
Prinzipschaltbild	Basic circuit diagram

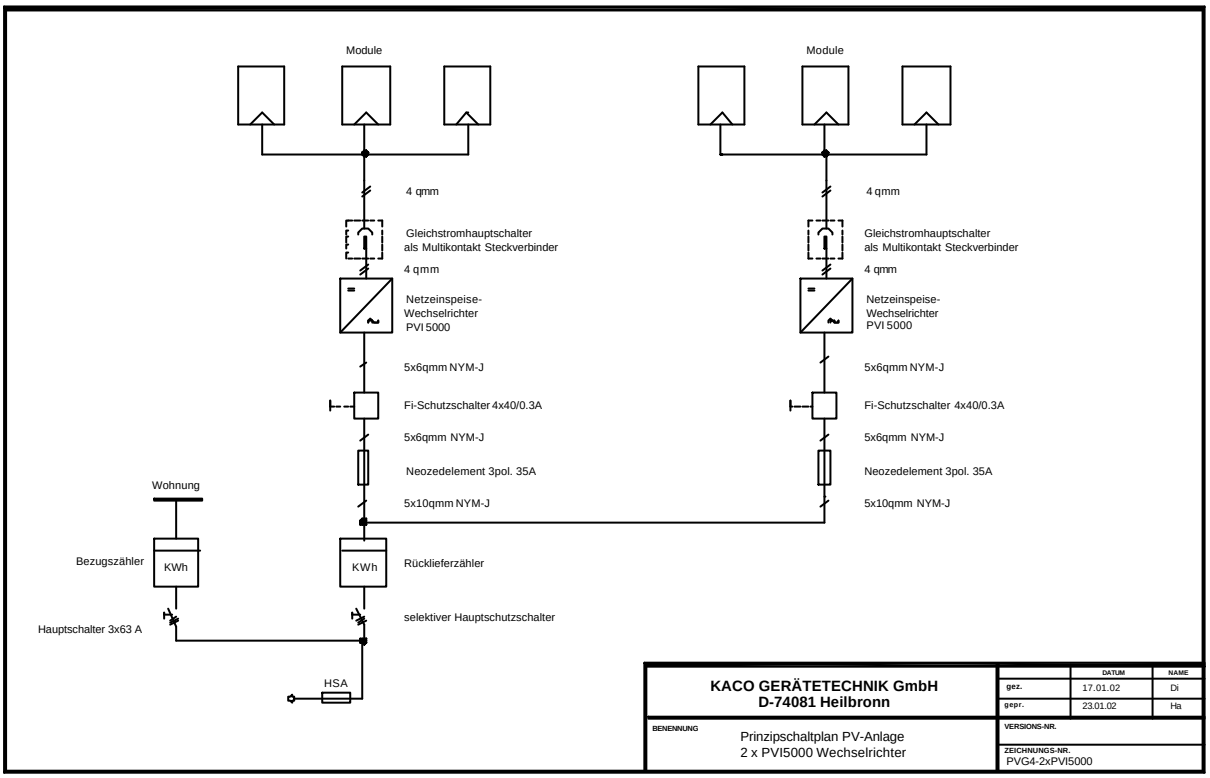

Fig. 8 Unipolar Circuit Diagram for an installation with two inverters

Gleichstrom-Hauptschalter als Multikontakt-Steckverbinder	DC main switch used as multi-contact connector
Netzeinspeise-Wechselrichter PVI 5000	Line input inverter PVI 5000
FI-Schalter	Circuit breaker
Rücklieferzähler	Return delivery meter
Selektiver Hauptleitungs-Schutzschalter	Selective mains line circuit breaker
Bezugszähler	Reference meter
Hauptschalter	Main switch
Wohnung	Residence/Domicile
Prinzipschaltbild	Basic circuit diagram

Overview of components:

1.) Solar generator:
See page Chapter 8.4, selection of solar modules for the solar generator

2.) DC terminal (connection box):
Parallel connection of two generator leads is effected either on a DC terminal between the solar generator and inverter or by means of multi-contact connectors directly on the inverter (the inverter is provided with terminals for two strings). Of course these strings can also be connected directly to the solar generator with a positive and negative lead routed

to the inverter.
To avoid damage or yield losses of your installation both strings are decoupled via diodes, if necessary. Whether or not such diodes are necessary depends on the solar generator being used. In general, strings will only be needed if a different rate of solar insolation is expected for each string or if one of the strings is subject to shading. Please contact your solar installation expert for further questions.

3.) DC Main Switch:
A DC main switch must be provided between the inverter and solar generator in order to disconnect the inverter from generator voltage. When selecting this switch, the current and voltage ratings of the solar generator must be taken into account. Alternatively, multi-contact connectors may be used as a separator on the DC lead of the inverter. However, the line fuses of the inverter must be deactivated prior to disconnecting the multi-contact connectors, preventing the switch from carrying current and preventing arcing, which would destroy the connector.

4.) FI Circuit Breaker
To protect against the risk of personal injuries, a four-pole circuit breaker should be provided. In accordance with DIN/VDE 0664, this circuit breaker should be enabled at pulsing DC fault currents. Alternatively, FI circuit breakers can be used (up to a nominal fault current of 300 mA).

5.) Line fuses:
The inverter lead should be provided with NEOZED fuses.
Depending on the cable cross-section, fuses of the type 25A, 4-6 mm^2 cross-section or 35A, 6mm^2 fuse inserts should be used.

6.) Power (delivery) meter:
The required power meter is specified and installed by the responsible Electrical Supply Company (the tolerance of these meters is ± 2%). Some electrical supply companies also permit the use of own calibrated power meters. In this case, no rent or lease will be charged for the meter, but the energy supply company is entitled to request meter calibration at regular intervals.

7.) Selective Main Switch:
According to TAG 2000 the main switch must be designed as a selective mains line circuit breaker and comply with E DIN VDE 0643: 2000-8 or, respectively, E DIN VDE 0645: 2000-8. If you should have any further queries please contact your responsible power supply company.

8.2. Multi-inverter installations

The following aspects should be observed for installations with several inverters:

1. Unsymmetrical power delivery (phase shifting):
As far as possible, power delivery should be distributed over three phases. Pursuant to the VDEW directive concerning the connection and parallel operation of independent power generating plants on the low-voltage mains, 4th Edition 2001, phase shifting must not exceed max. 5 kWp. Due to the fact that PVI 5000 effects its line input (power delivery) on a single phase, a maximum of 5 kWp generator power is permitted for use with one or two inverters. Several electrical supply companies allow exceptions - please contact your responsible counterparts in these cases. If three inverters are used, each inverter may be charged with a generator power of up to 6.4 kWp.

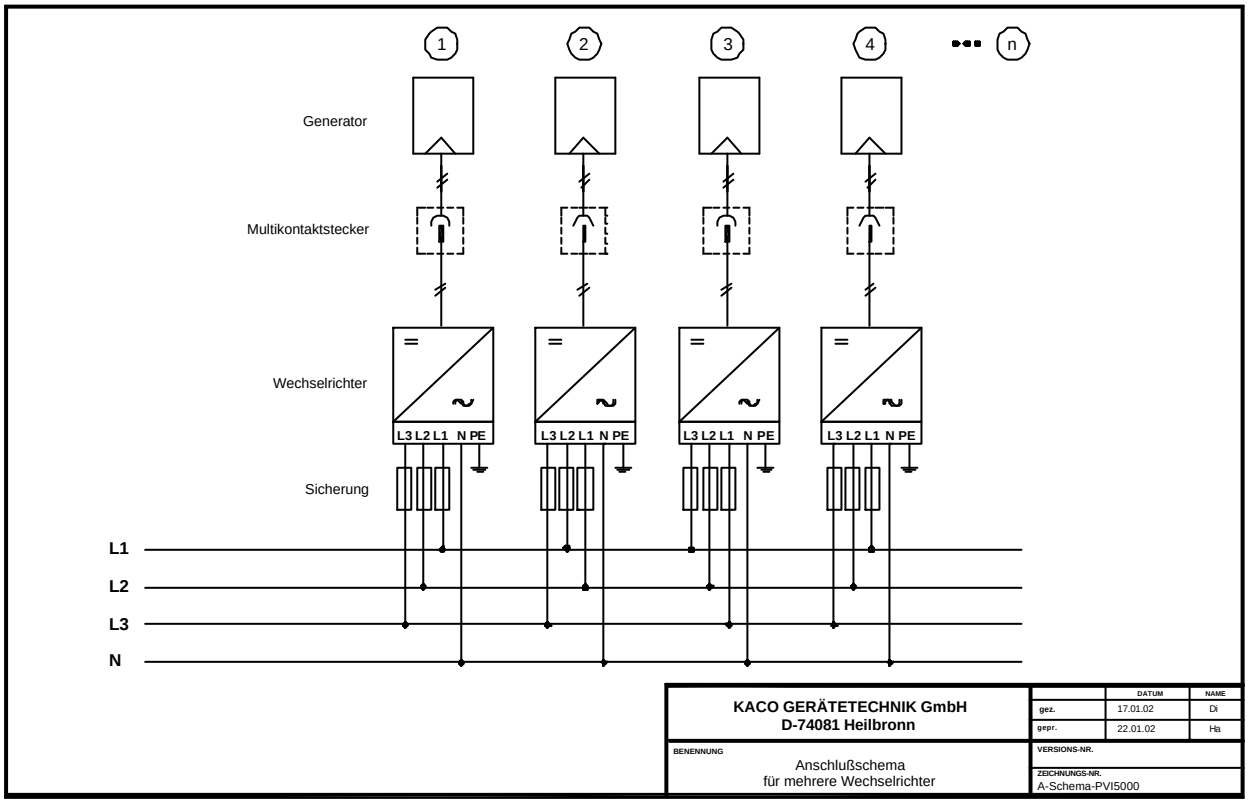

Fig. 9 Mains connection of installations with several inverters

Multikontaktstecker	Multi-contact connector
Wechselrichter	Inverter
Sicherung	Fuse
Anschluss-Schema für mehrere Wechselrichter	Wiring plan for several inverters

2. Electrical connections:

PVI 5000 is equipped with three-phase monitoring, whereas power delivery (line input) only takes place on one phase. To avoid phase-shifting on the grid, the inverters of multi-inverter installations should ensure power delivery on different phases. Power delivery is effected on the phase marked with L1 on the inverter terminals. Therefore, if you are operating several inverters, connect the terminal L1 of the first device to phase L1. For the second device, connect terminal L1 to phase L2, and for the third device, connect terminal L1 to phase L3, and so forth. This will ensure optimal power distribution.

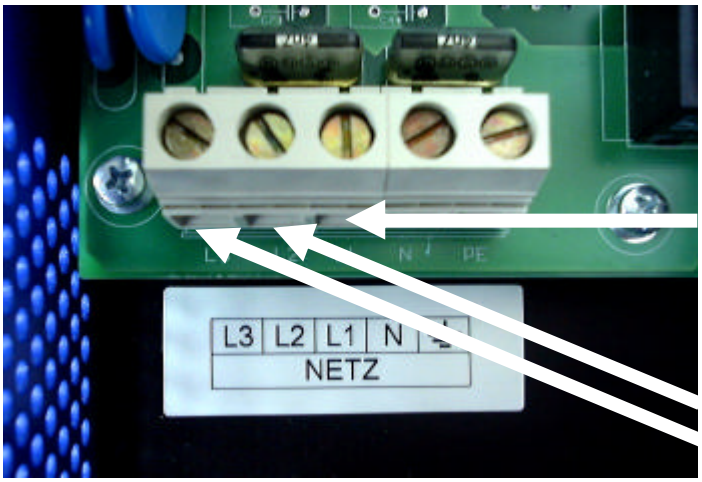

Terminal L1connected for line input

Terminals L2 and L3 are only monitored

Fig. 10 Line (mains) connection terminals

3. Circuit breakers:

To protect persons against electrical hazards the inverters should be provided with a 4-pole circuit breaker. This circuit breaker should be compliant with DIN/VDE 0664 and be activated at AC fault currents and pulsating DC fault currents. Alternatively, a universal circuit breaker (suitable for all currents) may be used. Circuit breakers with a fault current rating of 300mA must be used. Depending on the current load of the circuit breaker, up to 6 inverters may be connected.

8.3. Selection of solar modules for the solar generator

The selection of the solar generator is of central importance for the design of a PV installation. It is vital to ensure that the solar generator is compatible with the inverter.

According to the VDEW directive for the connection and parallel operation of independent power generating plants on the low-voltage mains, 4th Edition 2001, a max. generator power of 5 kWp is permissible for single-phase power delivery (as the inverter power delivery is on one phase only). Several power supply companies allow exceptions - please contact your responsible counterparts in these cases.
Please observe the following data for dimensioning your solar generator:

Feature	**PVI 5000**
Max. generator power	6400 W_p
Min. no-load voltage U_0	Greater than 410 V_{DC}
Max. no-load voltage U_0	Less than 750V_{DC} (at a solar cell temperature of -10°C)
MPP voltage U_{MPP}	350 .... 600V_{DC} (at a solar cell temperature of +70°C)
Number of solar modules, if 12V modules are used	23 ... 32 ea.
Number of solar modules, if 24V-modules are used	12 ... 16 ea.

Max. number of modules: Please consult KACO to obtain a special approval for other module configurations.

In most cases, at least two strings are connected to a PVI 5000 inverter. For some large modules it may be sufficient to use only one string for optimum inverter operation. In the case of 24V-modules, 5 strings or more may be used. The type of installation largely depends on the environmental conditions (site, location). In many cases we recommend an installation configuration using a minimum number of strings to keep the installation costs as low as possible.

Attention! The data shown above refers to standard modules and Central European conditions. The solar generator should be dimensioned on the basis of the following calculations:

Attention! For parallel strings it is vital that each string consists of the same number of modules. The strings are connected directly parallel to the inverter and therefore, must have the same voltage!

Dimensioning of the Solar Generator:
The number of PV modules connected in series must be selected in such a way that the output voltage of the PV generator is maintained within the admissible input voltage range of the inverter – even in the event of extreme external temperatures. In Central Europe, module temperatures between –10°C and +70°C should be assumed. The voltage/ temperature coefficient is approx. –80 mV/°C for 12-V modules and approx. –160 V/°C for 24-V modules.

1. U_o (-10°C) < max. input voltage ($750V_{DC}$)
Even at very low external temperatures (-10°C) , the no-load voltage of the connected string must remain within the admissible input voltage range. For example, if the temperature falls from 25°C to –10 °C, the no-load voltage of 12-V modules increases by approx. 2.8 V per module (5.6 V for 24-V modules). The no-load voltage of the entire string must be less than 750V.

2. U_{Mpp} (+70°C) > min. Input voltage ($350V_{DC}$)
Even at very high external temperatures (+70°C) the MPP of the connected string should remain within the admissible input voltage range. If the temperature rises from 25°C to 70 °C, the MPP voltage of 12-V modules falls by approx. 3.6 V per module (7.2 V for 24-V modules). The MPP voltage of the entire string should be 350 V.
Even if the MPP voltage is beyond the admissible input range, the installation nevertheless continues to work properly. However, the delivered power is slightly less than the maximum yield.

Provided that the input voltage is within the admissible input voltage range, the inverter will not be damaged if a connected PV generator should supply current above the max. usable input current

If the PV generator should supply more than 6.4 kW for a short time, particularly due to clouds and relatively low module temperatures, it is possible that the inverter switches off for safety reasons and automatically switches on again after approx. 2-3 minutes. The overload status is shown on the display in plain language. Under normal circumstances, however, the dynamic control of the inverter ensures that this condition is recognized and the inverter operation is not interrupted.

8.4. Orientation of the solar generator

The solar generator still represents the most substantial cost factor of a solar installation. Therefore, it is very important to obtain maximum energy yields. To achieve this goal, solar generators located in Central Europe should be orientated towards the South at an angle of inclination of 30°, and shading of whatever kind should be prevented under all circumstances.

In many cases, the recommended angle of inclination cannot be implemented for technical reasons. To ensure high energy yield of a solar generator with optimal orientation (South, inclination angle of 30°), the efficiency of the solar generator can be increased by the values listed in our table below (data in %):

Inclination in °	**Deviation from the South Axis in °**									
	90	**80**	**70**	**60**	**50**	**40**	**30**	**20**	**10**	**0**
0° (horizontal)	11	11	11	11	11	11	11	11	11	11
10°	11	11	11	11	5	5	5	5	5	5
20°	11	11	11	5	5	5	5	5	5	0
30°	18	11	11	11	5	5	5	5	0	0
40°	18	18	18	11	11	5	5	5	5	0
50°	25	25	18	18	11	11	11	11	5	5
60°	33	33	25	25	18	18	18	18	11	11
70°	43	43	33	33	25	25	25	25	25	25
80°	54	54	43	43	43	43	33	33	33	33
90° (vertical)	67	67	67	54	54	54	54	54	54	54

For roofs that are orientated towards the East/West we recommend two-string PV installations. To ensure optimum yield of the installation, the first string should be installed on the East side of the roof, whereas the second string should be installed on the West side of the roof.

In exposed mountain areas or Southern regions it is recommended to reduce the efficiency ranges. Please consult your specialist dealer or notify us if you should require any further assistance.

8.5. Acceptance of PV installations and documents required by the Electrical Supply company

Your solar installation expert will apply for approval of your photovoltaic installation by the responsible Electrical Supply company. A major part of the documents required for application and approval of your installation is included in this manual.

The application and approval conditions can vary a lot, depending on the responsible Electrical Supply company. Usually, the startup procedure is as follows:

1.) Submittal of documents to the Electrical Supply company
(responsibility of your solar installation expert)
2.) Installation
3.) Installation of power meter by the Electrical Supply company
4.) Acceptance of your installation by the Electrical Supply company

You will require the following documents:

1. Application / Completion notice by the registered installation company
2. Location plan showing the estate borders and place of installation
3. Complete circuit diagram of installation and utilities
(Unipolar view, see Chapter 8.1, Setup of the installation);
4. Data sheet for independent power generating plants (VDEW form) (responsibility of your solar installation expert);
5. Description of the protection devices indicating the type, circuit, make and function (responsibility of your solar installation expert);
6. Description of the inverter / declaration of conformity of the manufacturer;
7. Information on the short-circuit resistance of circuit components

9. EU Declaration of Conformity

The device described below:

PV Line Input Inverter

Description:	Blue Planet PVI 5000
Rated power:	5200 W
Input voltage:	350 – 750 VDC
Output voltage:	230V / 50Hz

is confirmed to be compliant with the protection requirements set forth in The Council Directive for the Harmonization of Legal Stipulations of the Member States concerning Electromagnetic Compatibility (89/336/EWG) and the Low Voltage Regulations (72/23 EWG).

The assessment of the product concerning its Electromagnetic Compatibility is based on the following standards:

Emitted interference:	**EN 55014-1: 1993**
Interference immunity:	**EN 55014-2: 1997**
Harmonic (upper) waves:	**EN 61000-3-2: 1995**
Voltage fluctuations + flicker:	**EN 61000-3-3: 1995**

The assessment and determination of Electrical Safety is based on the following standard:

Semiconductor inverters	EN 60146-1-1: 1994
	EN 60146-1-3: 1994

This declaration has been given by

KACO GERÄTETECHNIK GmbH,

Gottfried-Leibniz-Str. 1

D-74172 Neckarsulm

and authorized by its responsible representative,

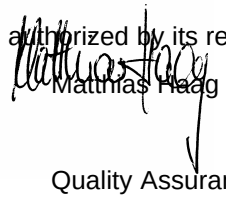

Matthias Haag

Quality Assurance Commissioner

Heilbronn, 08 January 2003
KACO GERÄTETECHNIK GmbH

10. Factory declaration for "Independent Power Generating Plants on low-voltage grids"

The device described below:

PV Line Input Inverter

Description:	Blue Planet PVI 5000
Rated power:	5200 W
Input voltage:	350 – 750 VDC
Output voltage:	230V / 50Hz

is herewith declared to be compliant with the

Directive on the connection and parallel operation of independent power generating plants on the low-voltage mains (4th Edition 2001)

The inverter is equipped with a three-phase undervoltage protection pursuant to Section 2.4.2. As the inverter is not capable of independent current operation, a permanently accessible disconnecting device will not be required (please refer to Section 2.1.2 - disconnecting device/separators). Type testing for compliance with the break values of the three-phase undervoltage protection is performed on each device.

This factory declaration has been given by the responsible manufacturer:

KACO GERÄTETECHNIK GmbH
Gottfried-Leibniz-Str. 1
74172 Neckarsulm

by its authorized representative

Matthias Haag
Quality Assurance Commissioner

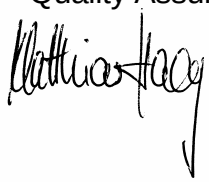

Heilbronn, 08 January 2003
KACO GERÄTETECHNIK GmbH

11. Diagrams

11.1. Degree of Efficiency

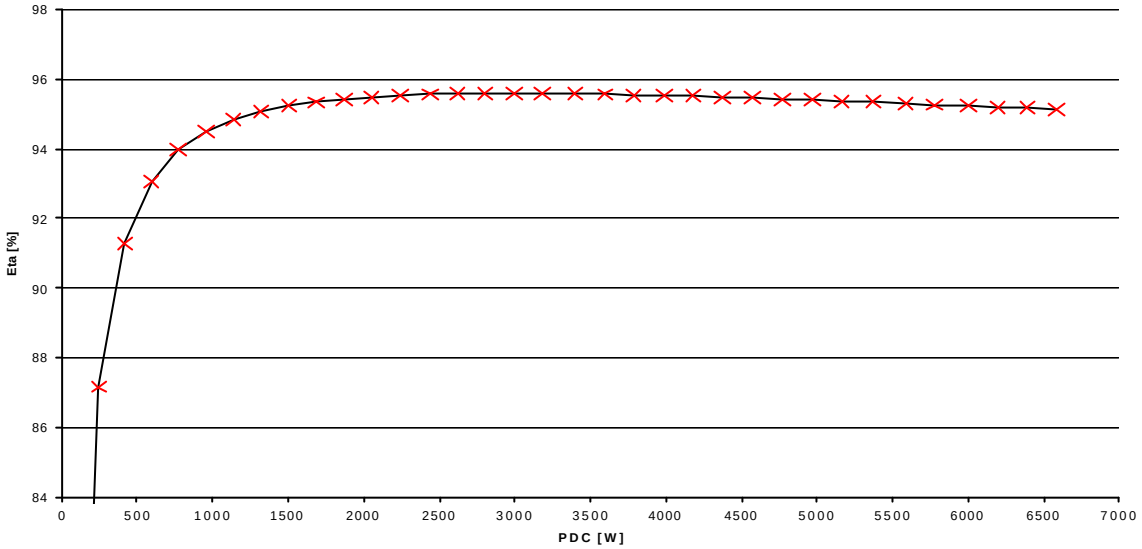

Inverter efficiency is a crucial factor. Our graph above shows the degree of efficiency of a Blue Plant PVI 5000 inverter. This curve shows very clearly that the inverter reaches a degree of efficiency of approx. 91.5% at a rated power of only 10 %.

11.2. Delivered Current

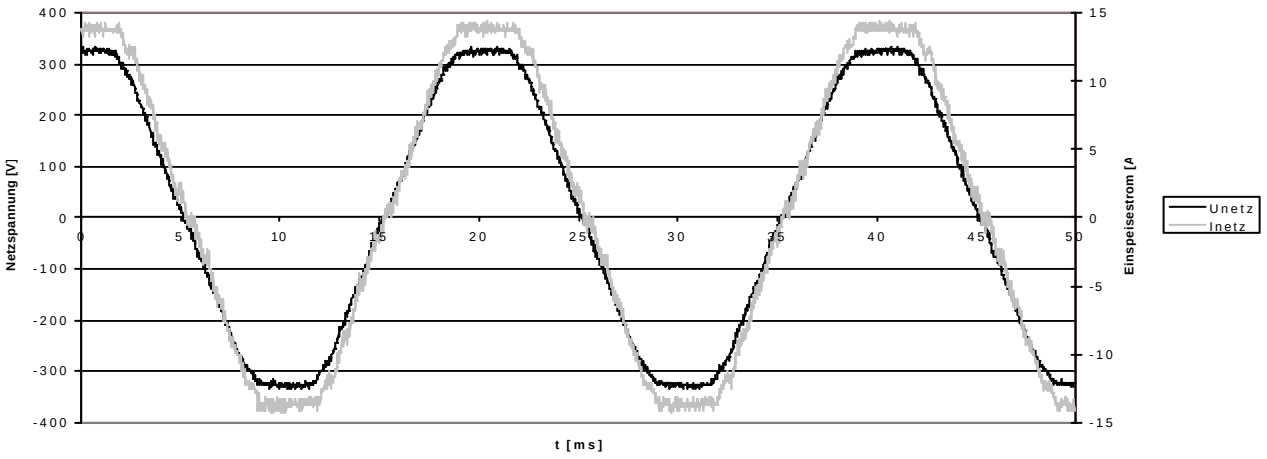

Line voltage curve and curve shape of the delivered current.

11.3. EMC Measurements

Below is an excerpt from the EMC measurements conducted throughout the development. The device complies with all threshold values that are required to obtain CE approval. There will be no technical disturbances or personal hazards in the vicinity of the inverter or PV installation.

RFI Voltage AC

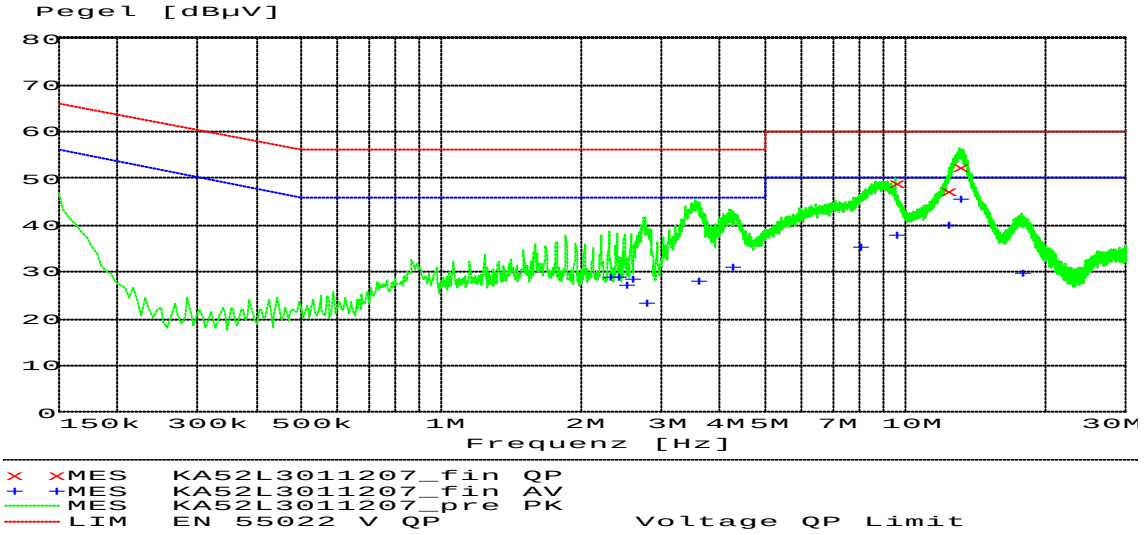

MEASURING RESULT: "KA52L3011207_fin QP"

07.06.01 12:15

Frequency	Level	Transd	Limit	Margin	Line	PE
MHz	dBµV	dB	dBµV	dB		
9.546000	49.00	10.7	60	11.0	L3	GND
12.390000	47.10	10.8	60	12.9	L3	GND
13.101000	52.30	10.9	60	7.7	L3	GND

MEASURING RESULT: "KA52L3011207_fin AV"

07.06.01 12:15

Frequency	Level	Transd	Limit	Margin	Line	PE
MHz	dBµV	dB	dBµV	dB		
2.310000	28.90	10.3	46	17.1	L3	GND
2.395500	28.90	10.3	46	17.1	L3	GND
2.490000	27.10	10.3	46	18.9	L3	GND
2.575500	28.60	10.2	46	17.4	L3	GND
2.760000	23.30	10.2	46	22.7	L3	GND
3.552000	27.80	10.3	46	18.2	L3	GND
4.213500	31.20	10.4	46	14.8	L3	GND
7.966500	35.50	10.5	50	14.5	L3	GND
9.546000	38.00	10.7	50	12.0	L3	GND
12.390000	40.10	10.8	50	9.9	L3	GND
13.101000	45.40	10.9	50	4.6	L3	GND

17.866500	29.60	11.2	50	20.4	L3	GND

11.4. Typical Daily Yield

The following two diagrams show typical daily yields of Blue Planet PVI 5000.
Data has been obtained by data transfer to a PC via the integrated RS-232 interface (standard):

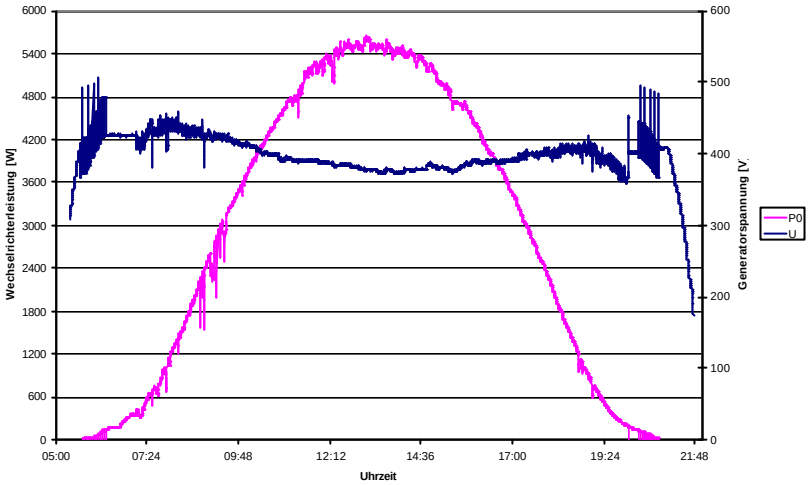

Daily power delivery and solar generator voltage on a sunny summer's day

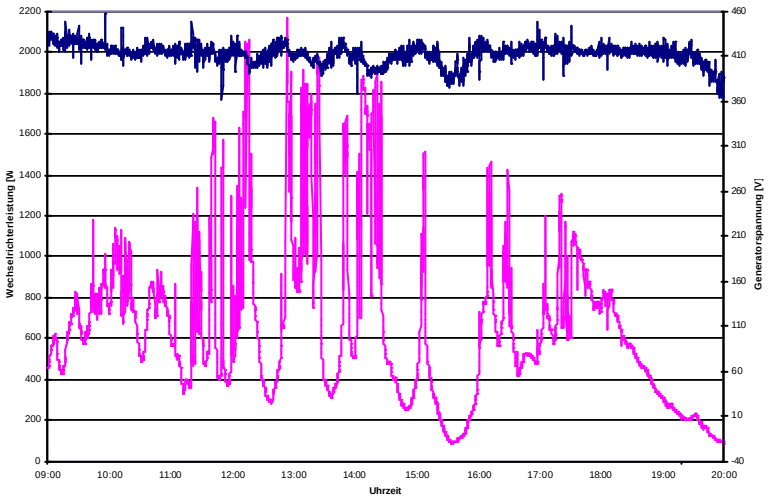

Daily power delivery and solar generator voltage on a partly cloudy and partly sunny summer's day.

12. Guarantee an Service

Guarantee
KACO GERÄTETECHNIK GmbH grants a 5-years‘ guarantee on the Blue Planet PVI 5000 inverter, which starts from the date of installation and expires 66 months after delivery by KACO at the very latest.

Throughout this period KACO GERÄTETECHNIK GmbH will guarantee proper functioning of the devices as well as free factory-repair of any defects that we are accountable for.

If your device should show any signs of a defect or malfunction during this guarantee period, please consult your specialized dealer or installer.

Guarantee claims shall not be accepted under the following circumstances:
- Devices were not used for their intended purpose
- Improper installation; installation was not carried out in accordance with the relevant standards
- Improper operation
- Devices were operated with defective protective devices
- Devices were changed or manipulated by the user
- External influence or Act of God
- Insufficient ventilation of the system
- Non-conformance with valid safety regulations (VDE an others) or Act of God (lightning, overvoltage, tempest, fire)
- Transport damages

In the event that a guarantee claim should have to be settled the defective unit(s) must be disassembled and returned to the factory of KACO GERÄTETECHNIK GmbH. Return shipments must be effected in their original or similar transport packaging. The costs of return shipments cannot be borne by KACO GERÄTETECHNIK GmbH.

KACO shall not grant any guarantee service unless the defective device has been returned together with a copy of the original invoice. The type label on the device must be fully readable. In the event that these conditions should not be met, KACO shall reserve the right to reject any guarantee claims.

The warranty period for rework or replacements shall be 6 months after delivery of the original device, but at least until the end of the original guarantee period granted for the delivered device.

Service

High quality and longevity of our inverters were a central issue for us - already at the time of product development. Our more than 60 years of experience in the field of current inverters are backing up this philosophy.

Despite all quality-assuring measures, however, disturbances may occur in very rare cases. KACO GERÄTETECHNIK GmbH will offer a maximum degree of assistance if one of these cases should arise. KACO GERÄTETECHNIK GmbH will take every effort to remedy any defects fast and without unnecessary bureaucracy. Please contact our service department directly – and you will be aided and supported very quickly. For example, you will be able to make fast appointments for factory repair.

Moreover, we are offering a guarantee on the availability of spare parts for 15 years from the purchasing date.

13. Troubleshooting and Fault Diagnostics

13.1. Troubleshooting

Within the scope of our continuously expanding Quality Assurance System, our goal is to rule out any faults and defects. You have purchased a product that has left our factory in a proper condition. Each individual device has successfully passed extensive inspection tests for proper operation and functioning of protective devices, as well as a long-duration test at our factory.

Should your PV installation not work properly despite all these measures, we recommend the following procedure for remediation:

Check the solar generator and mains connections leading to the PVI 5000, observing all safety instructions given in this manual. Please observe the inverter carefully and take note of the display messages and LED displays.

Below is a summary of possible errors and recommended remedies:

Error	Cause	Remedy / Explanation
Inverter shows an unrealistic daily peak value	Line voltage failure	Even if an incorrect daily peak value is displayed the inverter continues to work properly and without any yield losses. Values are reset overnight. If you wish to reset the display immediately, disconnect the inverter and the DC line voltage supply and switch on the inverter again.
Daily yield values do not correspond to the values shown on the power meter of the Electrical Supply Company.	Tolerances of the inverter's measuring elements	Measuring errors are caused by tolerances of the measuring elements. The tolerances of the individual measuring values are shown in Chapter 6.3, Display Operation and Settings. The daily yield value may deviate from the value shown on the power meter by up to 15%.
No display shown	1.) Device is in the night shut-down mode 2.) No line voltage is present 3.) Solar generator voltage is less than 300 V	The inverter shuts down over night. If the display should not be illuminated during a normal time of the day, you should check on the power meter whether or not the device delivers power. If power is delivered, the display module is defective, and the inverter has to be returned to KACO for repair. If no power is delivered you should check if line voltage is present and the solar generator voltage is higher than 350 V. If this is the case, but the inverter still fails to deliver power, the device has to be returned to KACO for repair.

PV Line Input Inverters

Blue Planet PVI 5000

Error	Cause	Remedy / Explanation
Inverter does not start	4.) Device is in its night shut-down mode 5.) No line voltage is present 6.) The solar generator voltage is less than 410 V	The inverter shuts down over night. If the display should not be illuminated during a normal time of the day, you should check on the power meter whether or not the device delivers power. If power is delivered, the display module is defective, and the inverter has to be returned to KACO for repair. If no power is delivered you should check if line voltage is present and the solar generator voltage is higher than 310 V. If this is the case, but the inverter still fails to deliver power, the device has to be returned to KACO for repair.
Inverter is active, but does not deliver power – the display reads: Start from 410 V Measurement: xxx V	Insufficient generator voltage (measured voltage is less than 410V)	After sunrise, at sunset, and during times of low insolation due to bad weather conditions the generator voltage or, respectively, generator power fed from the roof may be insufficient for power delivery.
Inverter is active, but does not deliver power – the display reads: Start from 410 V Measurement: xxx V (measured voltage is higher than 410V)	The inverter has interrupted its power delivery due to a malfunction.	After an interruption of the power delivery due to a malfunction (Line power failure, overtemperature, overload, etc.) the inverter always waits for 3-4 minutes before resuming its power delivery operation. In the event of line failures, several interruptions are possible during the day. If more than 10 interruptions should occur over several weeks, you should contact your solar installation provider.
Although there is sufficient insolation and the display is illuminated, the inverter does not deliver power or respond to key operation.	"Crash" of the inverter software.	At times of low insolation and disturbed grids system failures may occur during the day. Under the worst circumstances, software "crashes" may occur as a result of continuous grid disturbances. To reset the system immediately, disconnect it from mains power and switch it on again. If this error should occur more frequently, please contact your solar installation expert.
The inverter terminates power delivery shortly after starting-up, although there is enough insolation.	Defective mains isolation relay in the inverter.	Although there is enough insolation, the inverter delivers power for a few seconds only and switches off again. During this short time a power input between 0 – 5 W is displayed. If insufficient generator power can be ruled out in this case, the mains isolation relay is presumably defective and prevents the inverter from being activated.
Mains fuse is initiated	1.) Insufficient mains fuse rating 2.) Inverter hardware is damaged	1.) At times of high insolation the inverter is capable of delivering current up to 25A, depending on the type of solar generator. Therefore, the mains fuse should have a rating of at least 25A. 2.) The mains fuse acts immediately if the inverter changes to power delivery (i.e. on termination of the start-up period). In this case, the inverter hardware is damaged, and the device has to be returned to KACO for repair.

If the defect found should not be able to be remedied by means of the measures described above, please contact your solar installation provider or our Service Department.

Please have the following information ready to enable our Service Department to respond quickly and properly:

Inverter Data

1) Serial number of the device
2) Inverter type
3) Short description of error
4) Is the error reproducible? If so, please provide a short description.
5) Does the error occur sporadically?
6) Describe the insolation conditions prevailing when the error occurred.
7) Hour of the day

Solar generator data:

1.) Module type, manufacturer (please send data sheet, if available).
2.) Number of modules connected in series
3.) Number of strings
4.) Generator power

If it should become necessary to return the PVI 5000 for repair, please use the original packaging.

13.2 Transport damages

To ensure high quality and reliability, Blue Planet PVI 5000 has been subjected to extensive testing and inspections at our inspection site. Our inverters leave our factory in a proper electrical and mechanical condition. Special packaging is used to ensure that nothing can happen during transport. Yet, transport damages are possible, although these damages are usually the carrier's responsibility.

Please inspect the inverter carefully after delivery. If you should discover any damages on the packaging, which indicate that the inverter might be damaged, or if you can state obvious inverter damage, please notify the responsible carrier immediately.

If necessary, your solar installation provider or KACO will assist you in this matter. In any case, written damage reports must be submitted to the carrier within six days after receipt of the goods at the very latest.

14. Status Protocol

Customer:				
Date, Place:				
Solar generator: (Module type and number)				
Orientation				
Hours				
Weather conditions				
Shading				
Inverter type + no.				
Display	Solar generator-voltage		Date + Hour	
	Solar generator current		Yield today	
	Mains voltage		Yield per year	
	Mains current		Total yield	
	Delivered power		Operating hours today	
	Daily peak power		Operating hours per year	
	Temperature inside device		Total operating hours	
Comments				
Date / Issued by				

PV Line Input Inverters

Blue Planet PVI 5000

PV-Netzeinspeise-Wechselrichter

Blue Planet PVI 5000

KACO GERÄTETECHNIK

Notes:

KACO

GERÄTETECHNIK

Our product range:

INVERTERS

FREQUENCY CONVERTERS

DC / DC - CONVERTERS

CHARGE RECTIFIERS

POWER SUPPLIES

COMBINATED POWER SUPPLY UNITS

CHARGING STATIONS

FUSED DC VOLTAGE SUPPLIES

EMERGENCY POWER SUPPLIES

UNINTERRUPTIBLE POWER SUPPLIES (USP)

Your solar installation provider:

We reserve the right to technical alterations.