Conergy IPG K series

The inverters of the Conergy IPG K series have been tried and tested thousand-fold worldwide, stand out due to efficiency, reliability and longevity. The use of high quality components provides for maximum technical availability.

Immediately usable in whole Europe
An especially configured EU type in all power categories is available for the European market as well as a type that complies with German laws.

Maximum yields
With a maximum efficiency factor up to 98.8 % the Conergy IPG K 110, 280, 300 are among the front runners in their class. The very high efficiency factor is achieved by the use of the latest Transistors with trench gate structure. Thanks to the fast and precise MPP tracking the Conergy IPG K central inverters are able to extract maximum power from the PV generator under all weather conditions.

Highest availability
In respect of the operational life time of the inverter, the layout of the technical parameters has been optimised. The trench IGBTs (Insulated Gate Bipolar Transistors) used in Conergy central inverters have crucial advantages compared to conventional IGBTs:
| lower losses
| greater robustness
| gentlier switching behaviour

This results in improved EMC and temperature behaviour of the Conergy IPG K central inverters and a higher technical availability. The intelligent recognition of the minimum output preserves the AC contactor. A fast current surge detection for all transistors protects the IGBTs.

Flexible dimensioning of PV systems
The high input voltage of maximal 965 V of the inverters Conergy IPG K 110, 280 and 300 allow for efficient module wiring and very long module strings. Thus wiring expenses can be reduced significantly.

Installation and maintenance friendly
The clear layout of the devices permits simple connection of the power cables and fast installation. The overall height of the Conergy IPG K central inverter of only 180 cm not only permits transport through normal structural doors, but also problem-free setup in every concrete compact station. In addition, the stand space is very small. Neither assembly nor adjustment of the central inverters after installation are necessary.



Conergy IPG 110K

| European efficiency factor of up to 98.2 % guarantees maximum yields
| Maximal availability thanks overdimensioning of critical components
| Module wiring with very long strings due to
| high input voltage up to 965 V
| Easy installation and service due to generous
| and clear layout



Conergy IPG 280K



Conergy IPG 300K

Conergy IPG K series

	Conergy IPG 110 K	Conergy IPG 280 K	Conergy IPG 300 K
Input side (PV-Generator)			
Recommended solar generator connected load (STC)	110 kWp	280 kWp	300 kWp
Maximum input voltage (V_{dcmax})	965 V	965 V	965 V
Minimum input voltage (V_{dcmin})	493 V	493 V	530 V
Start-up input voltage ($V_{dcstart}$)	515 V	515 V	550 V
Rated input voltage ($V_{dc,r}$)	510 V	510 V	540 V
Maximum MPP voltage (V_{mppmax})	780 V	780 V	780 V
Minimum MPP voltage (V_{mppmin})	493 V	493 V	530 V
Maximum input current (I_{dcmax})	223 A	568 A	566 A
Start-up power	1000 W_{dc}	3000 W_{dc}	2000 W_{dc}
MPP Tracker	1	1	1
DC inputs	Coper busbar for M12 connection bolts , 4 connections per pole.		
Internal (thermal) fuses	250 A	630 A	630 A
MPP accuracy	> 99 %	> 99 %	> 99 %
Output side (Grid connection)			
Maximum grid voltage (V_{acmax})[1]	457 V	457 V	310 V
Minimum grid voltage (V_{acmin})[1]	322 V	322 V	218 V
Rated grid voltage ($V_{ac,r}$)[1]	400 V	400 V	270 V
Maximum output current (I_{acmax})	145 A	361 A	577 A
Rated power ($P_{ac,r}$)	100 kW	250 kW	270 kW
Rated frequency (f_r)	50 Hz (60 Hz)	50 Hz (60 Hz)	50 Hz (60 Hz)
Maximum frequency (f_{max})	52 Hz (61 Hz)	52 Hz (61 Hz)	52 Hz (61 Hz)
Minimum frequency (f_{min})	47 Hz (57 Hz)	47 Hz (57 Hz)	47 Hz (57 Hz)
Cosphi	≥ 0.99	≥ 0.99	≥ 0.99
Required grid type	TN grid / TT grid	TN grid / TT grid	IT grid
Output current distortion (at rated power)	≤ 2 %	≤ 2 %	≤ 3 %
AC outputs	L1, L2, L3, N, PE	L1, L2, L3, N, PE	L1, L2, L3, N, PE
Output terminals	Coper busbar for M12 connection bolts , 2 connections per pole.		
Feed in type	3-phase rotary current feed in without lasting the neutral, the neutral is only necessary for the grid monitoring		
Efficiency factor			
Maximum efficiency factor[2]	97.6 %	97.5 %	98.8 %
European efficiency factor[2]	97.0 %	96.8 %	98.2 %
Auxiliary supply			
Power consumption	55 W	60 W	60 W
Stand-by performance / nighttime performance	55 W	60 W	60 W
Power consumption during operation[3]	min. 55 W / max. 290 W	min. 60 W / max. 770 W	min. 60 W / max. 770 W
Energy demand during 8 hours at 25 °C[4]	1.7 kW	4.2 kW	4.1 kW
Data of auxiliary supply	230 V +/- 20 % / 46-63 Hz / TN grid (L1, N, PE)		
Required fuse	16 A Type B		
Terminals	Spring-type terminal 2,5 mm^2		

	Conergy IPG 110 K	Conergy IPG 280 K	Conergy IPG 300 K
Cooling			
Cooling type	Forced air cooling with thermal regulation		
Necessary air flow	1,500 m³/h	3,500 m³/h	3,500 m³/h
Sum of maximum counterpressure	70 Pa	70 Pa	70 Pa
Necessary air quailty	Cooling air must be filtered with filters type G3 or G4 according EN 779 / air must be free of explosive or corossive gases		
Enviroment requirements	**Conergy IPG 110K**	**Conergy IPG 280K**	**Conergy IPG 300K**
Ambient temperature	–20° C/+45° C	–20° C/+40° C	–20° C / +4° C
Maximum temperature for durable rated power	+45° C	+40° C	+40° C
Relative humidity (not-condensing)	0–95 %	0–95 %	0–95 %
Installation altitude	≤ 2,000 m	≤ 2,000 m	≤ 2,000 m
Noise emission	< 75 dB	< 85 dB	< 85 dB
Protection / Safety			
Protection type	IP 20, according EN 60529		
Protection class	Class I, according EN 61140		
Ground fault monitoring at PV input	Yes, dipole		
DC overvoltage protection	Yes, automatic disconnection if the inverter is running		
Over load behavior	Working point adjustment		
Over temperature behavior	Disconnection (no derating)		
Decoupling PV-Generator – Grid	Galvainc insulation LF-Transformer	Galvainc insulation LF-Transformer	No insulation - galvanic insulation will be done by the MV-Transformer
Surge protection PV input	Basic protection		
Surge protection AC output	Typ II according DIN EN 61643-11 / -12		
Surge protection auxiliary supply	Typ II according DIN EN 61643-11 / -12		
Grid monitoring			
Delay time after grid failure	180 second (EU-Typ)		
Trip time	< 200 millisecond		
Grid monitoring meets the requirements	VDE 0126-1-1, RD661, RD1663, DK5940, France, Czech Republic, Slovenia, Greece; others on demand		
Dimensions / Weight			
Dimensions in mm (B x H x T)[5]	1,210 x 1,800 x 800	2,010 x 1,800 x 800	2,010 x 1,800 x 800
Weight	1,220 kg	2,400 kg	1,540 kg
Conformity			
Transient emissions (EMC)	DIN EN 61000-6-4:2007-09		
Interference resistance (EMC)	DIN EN 61000-6-2:2006-03		
Grid quality	DIN EN 61000-3-11:2001-04 / DIN EN 61000-3-12:2005-09		
Equipment reliability	DIN EN 50178:1998-04		
CE conformity	Yes		
GS approval	Yes		

[1] Voltage between phases; grid measuring between phase and neutral
[2] At DC and AC rated voltage without involvment of auxiliary power
[3] Thermal regulated fans
[4] Values only for your information. Depence on plant, region and thermal situation!
[5] Including transport packaging 200 mm higher and plus 100 mm in length and wide of inverters

Conergy IPG K series

Efficiency curves with different input voltages

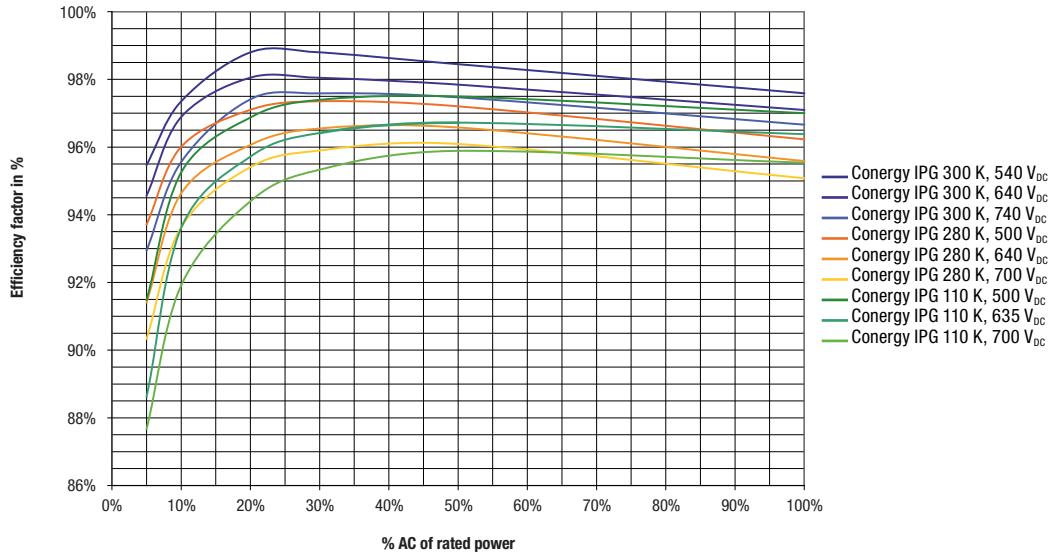

Central inverter Conergy IPG 110 K, 280 K (with transformer)

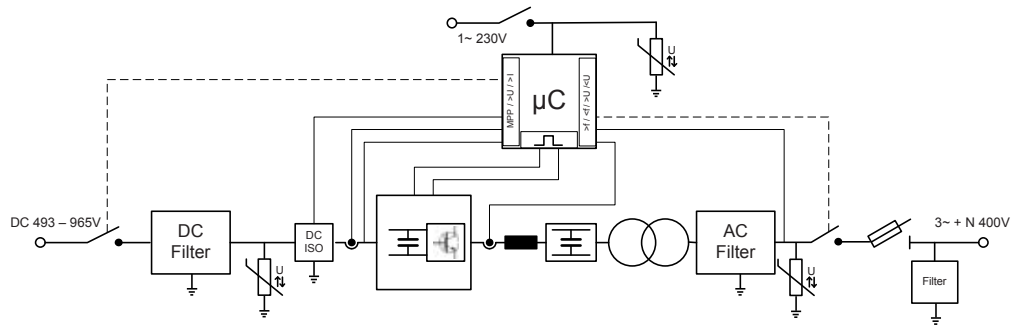

Central inverter Conergy IPG 300 K (transformerless)

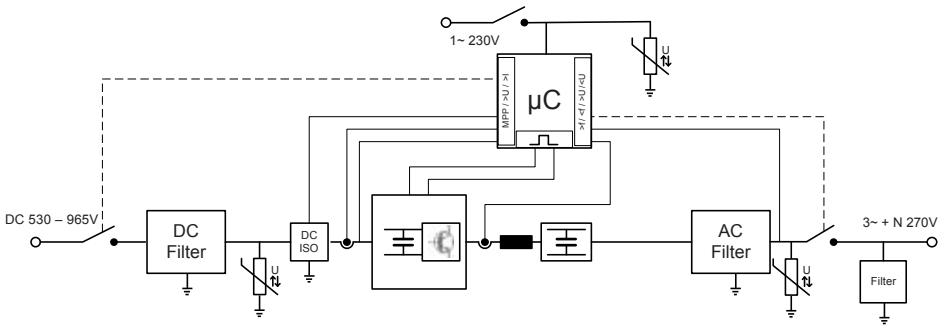

Available at:

Subject to technical modification without notice 2010©Conergy