

KACO new energy.

KACO blueplanet 92.0 TL3 US
KACO blueplanet 110 TL3 US
KACO blueplanet 125 TL3 US

S, XL - Grid Support Interactive Inverter

Manual

■English translation of German original

⚠ Authorized electrician

Important safety instructions

These instructions form part of the product and must be carefully read, observed and stored in a place which is freely accessible at all times.

EN-US

Legal provisions

The information contained in this document is the property of KACO new energy GmbH. Publication, in whole or in part, requires the written permission of KACO new energy GmbH.

KACO warranty

The latest version of our warranty conditions is available for download at http://www.kaco-newenergy.com.

Definitions on product designations

In this , the product "Grid Support Utility Interactive Inverter" is referred to as "device" for ease of reading.

Trademarks

All trademarks are recognised, even if not explicitly identified as such. A lack of identification does not mean that a product or designation/logo is free of trademarks.

Software

This device contains open source software developed by third parties and in some cases licensed under GPL and/or LGPL.

More details on this topic and a list of the open source software used, as well as the corresponding licence texts, can be found in the web interface information display under "Licence List".

KACO new energy.

EN-US

Photovoltaic feed-in inverter

Table of contents

1 General information 4
1.1 About this document 4
1.2 More information 4
1.3 Layout of Instructions 4
1.4 Identification 5
1.5 Warnings on the device 6
1.6 Target group 6

2 IMPORTANT SAFETY INSTRUCTIONS 7
2.1 SAVE THESE INSTRUCTIONS 7
2.2 Intended use 10
2.3 Protection features 11

3 Device description 12
3.1 Function 12
3.2 Structure of the device 12
3.3 Plant layout 14

4 Technical data 15
4.1 Electrical data 15
4.2 General data 17
4.3 Environmental data 17
4.4 Accessories 17

5 Transportation and Delivery 19
5.1 Scope of delivery 19
5.2 Transporting the unit 19
5.3 Installation tools 19

6 Assembly and preparation 20
6.1 Selecting an installation location 20
6.2 Unpacking the unit 21
6.3 Fastening the mount 22
6.4 Installing and securing the device 23

7 Installation 25
7.1 General 25
7.2 Opening the device 25
7.3 Surveying the connection area 25
7.4 Making the electrical connections 26
7.5 Connecting the device to the mains supply 27
7.6 Connecting the PV generator to the device 29
7.7 Inserting the overvoltage protection 32
7.8 Creating equipotential bonding 33
7.9 Connecting the interfaces 34
7.10 Sealing the connection area 38

8 Start-up 39
8.1 Conditions 39
8.2 Preconditions relating to standards 39
8.3 Network topologies 40
8.4 Start-up options 41

9 Configuration and operation 46
9.1 Initial start-up 46
9.2 Signal elements 48
9.3 User interface 50
9.4 Menu structure 53
9.5 Monitoring the device 75
9.6 Carry out firmware update 76
9.7 Access via Modbus 77

10 Specifications 78
10.1 Reactive power control 78
10.2 Regulating active power 87
10.3 FRT 92
10.4 Other grid support functions effective on active power 96
10.5 Advanced islanding detection 99
10.6 Q on demand 100

11 Maintenance and troubleshooting 101
11.1 Visual inspection 101
11.2 Cleaning 101
11.3 Replacing the fans 102
11.4 Replacing overvoltage protection 104
11.5 Shutting down for maintenance / troubleshooting 104
11.6 Faults 105
11.7 Fault messages 107
11.8 Troubleshooting 107

12 Decommissioning and removal 118
12.1 Switching off the device 118
12.2 Disconnecting the connections 118
12.3 Uninstalling the device 119
12.4 Removing the device 119
12.5 Packaging the device 119
12.6 Storing the device 119

13 Disposal 120

14 Service and warranty 121

EN-US

1 General information

1.1 About this document



⚠ WARNING

Improper handling of the device can be hazardous!

1. You must read and understand the manual in order to install and use the device safely.

Other applicable documents

During installation, observe all assembly and installation instructions for components and other parts of the system. These instructions also apply to the equipment, related components and other parts of the system.

Some of the documents which are required to register your system and have it approved are included with the manual.

Storing the documents

These instructions and other documents must be stored near the plant and be available at all times.

– You can download the current version of the manual at www.kaco-newenergy.com.

English translation of German original

This document has been produced in several languages. The German-language version is the original version. All other language versions are translations of the original version.

This document is valid for the following types of device from firmware version V03.59

Modules *[KACO art. no.]*	KACO blueplanet 92.0 TL3 M1 WM OD IIG0 / KACO blueplanet 92.0 TL3 M1 WM OD IIGX	[1001785 / 1001898]
	KACO blueplanet 110 TL3 M1 WM OD IIK0 / KACO blueplanet 110 TL3 M1 WM OD IIKX	[1001786 / 1001892]
	KACO blueplanet 125TL3 M1 WM OD IIK0 / KACO blueplanet 125TL3 M1 WM OD IIKX	[1001942 / 1001952]

1.2 More information

Links to more detailed information can be found at www.kaco-newenergy.com

Document title	Type of document
Technical data sheet	Product flyer
Modbus© protocol RS485 protocol reactive power control	Instructions for use
SunSpec information model reference SunSpec information model reference KACO	Excel files for software version with application note “Modbus protocol” under https://kaco-newenergy.com/downloads/
Software package	Files for current software
EU Declaration of Conformity Country-specific certificates Module-specific certification	Certification

1.3 Layout of Instructions

1.3.1 Symbols used

	General hazard		Fire and explosion hazard
	Electrical voltage		Risk of burns

EN-US

Earthing - ground conductor

1.3.2 Guide to safety instructions

⚠ DANGER

Immediate danger

Failure to observe this warning will lead directly to serious bodily injury or death.

⚠ WARNING

Potential danger

Failure to observe this warning may lead to serious bodily injury or death.

⚠ CAUTION

Low-risk hazard

Failure to observe this warning will lead to minor or moderate bodily injury.

⚠ CAUTION

Risk of damage to property

Failure to observe this warning will lead to property damage.

1.3.3 Additional information symbols

NOTE

Useful information and notes

Information that is important in relation to a specific topic or objective but is not related to safety.

1.3.4 Layout of action steps

↻ Pre-requisite for the action

1. Carry out first action step
2. Next action step
   ⇨ Intermediate outcome of the action step

⇨ Final outcome

1.4 Identification

You will find the name plate with the following data for service and other requirements specific to installation on the right side panel of the product:

- Product name
- Part no.
- Serial no.
- Date of manufacture
- Technical data
- Disposal information
- Certification marking, CE marking.

KACO new energy
Made in Germany

KACO blueplanet 125 TL3 M1 WM OD IIP0

	Part number	1001623
	Serial number	125TL01654321 Year Q4 / 23
Input	Vmax PV / Isc PV (max) / Inom PV	1500 V / 300 A / 160 A
	V-MPP at Pnom / V- range	875V - 1300V / 875V - 1450V
Output	Nominal voltage	600 V (3P+PE)
	Voltage range continuous operation	480 V - 760 V (Ph-Ph)
	Current (maximum continuous)	3 x 132,3 A
	Frequency range	45 Hz - 65 Hz
Output Power	Snom at 600 V Unom	125 000 VA
	Smax at 600 V Unom	137 500 VA
	Reactive power	cos phi 0,3-1 ind/cap
Environment	Temperature range	- 25...+60°C / -13...+140 °F
	Protection class / Ingress protection	I / IP66 / NEMA 4X
No galvanic separation / Ungrounded Arrays Only		Max. Backfeed Current 0 A
Grid Support Interactive Inverter		ARC fault circuit protection none
Interface protection according to country specific requirements, details see manual		

Conf. to UL 1741 & UL 62109-1
Cert. to CSA C22.2 No. 107.1 &
CAN/CSA Std. C22.2 No. 62019-1
CAN/CSA Std. C22.2 No. 62109-2

Fig. 1: Name plate

EN-US

1.5 Warnings on the device

A warning sticker is affixed to the device. Read the warnings carefully.

Do not remove the sticker. If the sticker is missing or is illegible, please contact a KACO representative or distributor.

– Article number: 3013153



Fig. 2: Warning sticker

1.6 Target group

All activities described in the document may only be carried out by specially trained personnel with the following qualifications:

– Knowledge about how an inverter functions and operates
– Knowledge of the modbus specifications
– Knowledge of the SunSpec modbus specifications
– Training in the handling of hazards and risks during the installation and operation of electrical units and plants.
– Education concerning the installation and start-up of electrical units and plants.
– Knowledge of applicable standards and directives.
– Knowledge and adherence to this document with all safety notices.

EN-US

2 IMPORTANT SAFETY INSTRUCTIONS



⚠ DANGER

Lethal voltages are still present in the connections and cables of the device even after the device has been switched off and disconnected!

Severe injuries or death may occur if the cables and/or terminals/busbars in the device are touched.

1. Observe all safety regulations and current technical connection specifications of the responsible power supply company.
2. The device may only be opened and serviced by an authorized electrician.
3. Switch off the grid voltage by turning off the external circuit breakers.
4. Do not touch the cables and/or terminals/busbars when switching the device on and off.
5. Keep the device closed when it is in operation.

The electrician is responsible for observing all existing standards and regulations. The following applies:

- Keep unauthorised persons away from the device and/or system.
- In particular, making sure that the locally applicable version of the standard [1] "Requirements for special installations or locations – solar photovoltaic (PV) power supply systems" is observed.
- Ensure operational safety by providing proper grounding, conductor dimensioning and appropriate protection against short circuiting.
- Observe all safety instructions on the product and in these operating instructions.
- Switch off all voltage sources and secure them against being inadvertently switched back on before performing visual inspections and maintenance.
- When taking measurements on the live device:
  - Do not touch the electrical connections
  - Remove all jewellery from wrists and fingers
  - Ensure that the testing equipment is in safe operating condition.
- Modifications to the surroundings of the device must comply with the applicable national and local standards.
- When working on the PV generator, it is also necessary to switch off the DC voltage with the external DC isolator switch (e.g. at the string combiner or the KACO DC switchbox) in addition to disconnecting the PV generator from the grid.

2.1 SAVE THESE INSTRUCTIONS



⚠ DANGER

Risk of fatal injury due to fire or explosions

Fire caused by flammable or explosive materials in the vicinity of the device can lead to serious injuries.

1. Do not mount the device in an area at risk of explosion or in the vicinity of highly flammable materials.

[1]

Country	Standard
EU	Harmonized document - HD 60364-7-712 (European implementation of the IEC standard)
USA	PV section of NEC 690 and sections in article 100, 690.4, 690.6 and 705.10

Tab. 1: Examples of standards specific to business premises



⚠ DANGER

Risk of fatal injury due to electric shock!

Severe injuries or death may result from improper use of the interface connections and failure to observe protection class III.

1. The SELV circuits (SELV: safety extra low voltage) can only be connected to other SELV circuits with protection class III.



⚠ DANGER

Lethal voltages are still present in the connections and cables of the device even after the device has been switched off and disconnected!

Severe injuries or death may occur if the cables and/or terminals/busbars in the device are touched.

1. The device is only permitted to be put into operation by a specialist.
2. Unauthorized persons must not be able to access the device.



⚠ DANGER

Dangerous voltage due to two operating voltages

Severe injuries or death may occur if the cables and/or terminals/busbars in the device are touched. The discharge time of the capacitors is up to 5 minutes.



1. Only appropriately qualified electricians authorized by the mains supply network operator are permitted to open and maintain the device.
2. Before opening the device: Disconnect the AC and DC side and wait at least 5 minutes.



⚠ DANGER

Risk of fatal injury due to electric shock!

Severe injuries or death will result if the live connections are touched. When there is solar radiation on the PV generator, DC voltage will be present at the open ends of the DC cables.

1. Activate the connection power at the switchbox or string combiner with the DC isolator switch.
2. The DC connection is intended exclusively for PV generators. Other sources fall within the scope of improper operation (e.g. batteries).
3. Only touch the PV generator cables on the insulation. Do not touch the exposed ends of the cables.
4. Avoid short circuits.
5. Do not connect any strings with a ground fault to the device.



⚠ DANGER

When deactivating the `night shut-off` ("Q on Demand" operation), a high DC voltage can continue to be present not only on the string combiner but also on the device, even though the string combiner is switched off.

1. In case of maintenance, the device must also be deenergized on the AC-side.
2. We recommend attaching an appropriate hazard warning on the string combiner.



⚠ WARNING

Hazard when using unsuitable fixing materials!

If unsuitable fixing materials are used, the device could fall and persons in front of the device may be seriously injured.

1. Use only fixing materials that are suitable for the mounting base. The fastening materials supplied are only to be used for masonry and concrete.
2. Only install the device in an upright hanging position.



⚠ WARNING

Risk of burns from hot housing components

Housing components could heat up during operation.

1. Only touch the housing cover of the device during operation.



⚠ WARNING

Danger due to live interface cables.

Damage to the integrated RSS transmitters when connecting to further devices.

1. Make sure the AC cable is disconnected from power.
2. If the system has multiple RSS transmitters, the most effective method for the reduction of interference frequencies is to synchronize the signal between the transmitters in a leader-follower process. This measure is not required in case of only one RSS transmitter.
3. Comply with the following wiring diagram.



⚠ WARNING

Risk of burning due to hot surface

Heat sinks become very hot during operation.

1. Never touch the heat sinks after starting up the device.
2. Wait until a cooling time of at least 10 minutes has elapsed before starting the cleaning process.

⚠ CAUTION

Hazard due to impact; risk of breakage to the device!

1. Pack the device securely for transport.
2. Transport the device using the intended carrying handles of the packaging box.
3. Do not expose the device to any shocks.

EN-US

⚠ CAUTION

Property damage due to gases that have an abrasive effect on surfaces when they come into contact with ambient humidity caused by weather conditions!

The housing of the device may be seriously damaged by gases (ammonia, sulfur, etc.) if it comes into contact with ambient humidity caused by weather conditions.

1. If the device is exposed to gases, it must be installed in a location that is visible.
2. Perform regular visual inspections.
3. Immediately remove any moisture from the housing.
4. Ensure that there is sufficient ventilation at the installation location.
5. Immediately remove dirt, especially on vents.
6. Failure to observe these instructions may result in damage to the device which is not covered by the warranty.

⚠ CAUTION

Damage to property due to condensation build-up

If the device is pre-assembled, moisture can get into the internal area via the dust-proof screw connections. The condensate that forms can cause damage to the device during installation and start-up.

✓ Keep the device sealed during pre-assembly and don't open the connection area until installation.

1. Seal off any screw fittings using sealing covers.
2. Check the interior space for any condensation water prior to electrical installation and, if necessary, allow it to dry out sufficiently.
3. Immediately remove any moisture from the housing.

⚠ CAUTION

Damage to the device from electrostatic discharge

Components inside the unit can be damaged beyond repair by static discharge.

1. Observe the ESD protective measures.
2. Earth yourself before touching a component by touching a grounded object.

NOTE

There are components within the housing that may only be repaired by our customer service team.

1. Do not attempt to rectify faults that are described here (in the troubleshooting chapter). Get in touch with our customer service team. Only carry out maintenance activities that are described here.
2. Log each maintenance activity in the “Service” menu item: “Service log” (exception: “User” interface) [See section 9.4.2 Page 54]
3. The device should be checked for proper operation by a qualified electrician at regular intervals. Always contact the service team of the system manufacturer if you encounter any issues.

2.2 Intended use

The device is a transformerless PV inverter which converts the direct current of the PV generator into grid-compatible three-phase alternating current and then feeds the three-phase alternating current into the public power grid.

The device is built using state-of-the-art technology and in accordance with the recognized safety rules. Nevertheless, improper use may cause lethal hazards for the operator or third parties or may result in damage to the device and other property.

The device is intended for indoor and outdoor applications and may only be used in countries for which it has been approved or for which it has been released by KACO new energy and the grid operator. [2]

Operate the device only with a permanent connection to the public power grid. The country and grid type selection must be commensurate with the respective location and grid type.

For grid connection, the requirements of the grid operator must be implemented. In addition, the authorisation to connect to the grid may be subject to approval by the responsible authorities.

The requirements of the grid operator must be met for grid connection to take place. The permission of the relevant authorities may also be required in order to secure authorisation to connection to the grid.

The name plate must be permanently attached to the product and must be in legible condition.

Any other or additional use is not considered proper or intended use and can lead to an annulment of the product guarantee. This includes:

- Use of a distribution system that is not described (grid type)
- Use of sources other than PV-strings.
- Mobile use
- Use in rooms where there is a risk of explosion
- Use in direct sunlight, rain or a storm or other harsh environmental conditions
- Outdoor use in environmental conditions that exceed the limits stated in the technical specifications > [See section 4.3 Page 17].
- Operation outside the specifications prescribed by the manufacturer
- Overvoltage of more than 1500 V at the DC connection
- Device modification
- Standalone mode

2.3 Protection features

The following monitoring and protection functions are integrated in the device:

- RCMU (Residual Current Monitoring Unit)
- Overvoltage conductor/varistor to protect the power semiconductors from high-energy transients on the grid and generator side
- Device temperature monitoring system
- EMC filter to protect the inverter from high-frequency grid interference
- Grid-side varistors grounded to earth to protect the product against Burst- und Surgeimpulsen
- Anti-islanding detection according to the current standards.
- IMI (Isolation Monitoring Interrupter) detection of a generator insulation fault.

NOTE

If the device is connected, the overvoltage conductors / varistors contained in the device have an impact on the electrical system insulation resistance test as per HD 60364-6 / IEC 60364-6 Low-voltage installations- Part 6: Verification.

IEC 60364-6 6.4.3.3 describes two options for this case. The first option is to disconnect devices with an overvoltage conductor or, if this is not practicable, then the test voltage can be reduced to 250V.

[2] **WARNING! The device is not intended for use in residential areas and cannot ensure adequate protection of radio reception in such environments.**

EN-US

3 Device description

3.1 Function

The device converts the DC voltage generated by the PV modules into AC voltage and feeds it into the grid. The starting procedure begins when there is sufficient sunlight and a specific minimum voltage is present in the device. The feed-in process begins once the PV generator has passed the insulation test and the grid parameters are within the requirements imposed by the grid operator for a specific monitoring time. If, as it gets dark, the voltage drops below the minimum voltage value, feed-in mode ends and the device switches off.

3.2 Structure of the device

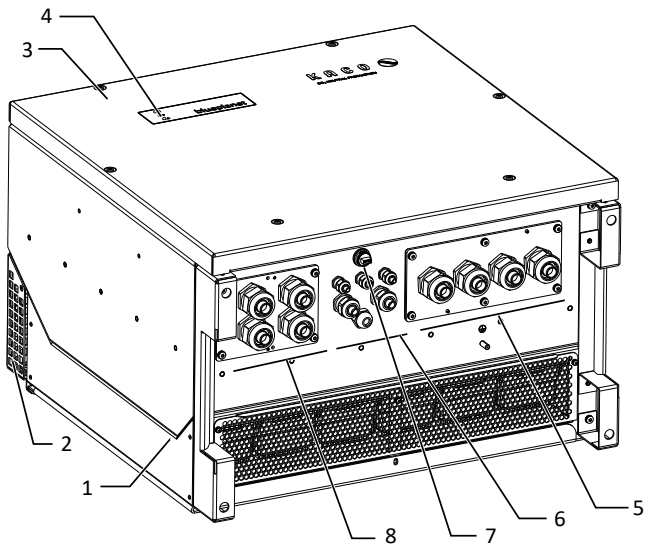

Fig. 3: Device diagram - S version

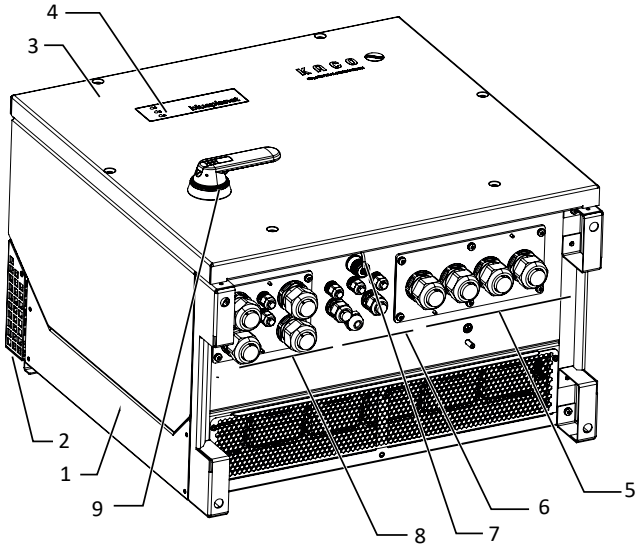

Fig. 4: Device diagram - XL version

Key

1	Housing	6	Interface / cable feed-through
2	Upper cover	7	USB socket
3	Top panel	8	DC connection / cable feed-through
4	Status indicator	9	DC isolator switch (not present in S version)
5	AC connection / cable feed-through		

3.2.1 Mechanical components

DC isolator switch (not present in S version)

The DC isolator switch is located on the housing door. of the device. The DC isolator switch is used to disconnect the device from the PV generator in order to carry out service.

Disconnecting the device from the PV generator

☞ Switch the DC isolator switches from 1 (ON) to 0 (OFF).

Connecting the device to the PV generator

☞ Switch the DC isolator switches from 0 (OFF) to 1 (ON).

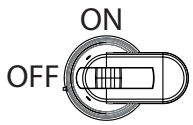

Fig. 5: DC isolator switch

3.2.2 Electrical functions

A potential-free relay contact is integrated into the device. Use this contact for one of the following functions:

Fault signal relay

The potential-free relay contact closes as soon as there is a fault during operation. You use this function, for example, to signal a fault visually or acoustically.

EN-US

3.2.3 Interfaces

You can configure the interfaces and the web server in the Settings menu. The device has the following interfaces for communication and remote monitoring.

Ethernet interface

Monitoring can occur directly on the device using the integrated Ethernet interface. A local web server is installed in the device for this purpose. This can also be used to request measured values remotely.

For monitoring a system comprising several inverters, we recommend you use an external data logging and monitoring system.

Ethernet interface

The device features two switched Ethernet ports to enable the user to, for example, connect several devices in series if the user prefers a linear topology.

RS485 interface

The device features two RS485-Interfaces. One RS485-Interface is earmarked for communication with a string combiner. This can be controlled using the Modbus RTU protocol. Data loggers that cannot be connected via Ethernet can be connected to the other RS485-Interface. The Sunspec and KACO protocol are supported in this case.

USB interface

The device's USB connection is a type A socket. It is located on the communication circuit board. The USB connection is specified to draw 500 mA of power.

Use the USB interface to read out stored operating data, load firmware updates or device configurations using a FAT32-formatted USB stick (max. 4GB).

A connection to the unit's internal web server can be established via a plugged-in USB WiFi stick. In addition to commissioning, service information and firmware updates, more extensive configurations are also possible via the web interface.

"Inverter Off" input / DRM 0 for Australia

In addition to the safety functions, the internal interface switches can also be actuated via the "Inverter Off" input.

If a Powador-protect is used as the central interface protection, the fail-safe disconnection of suitable KACO inverters from the public grid can be carried out by the internal interface switches instead of separate interface switches. This requires the inverters in the photovoltaic system to be connected to the Powador-protect.

Information on installation and use can be found in this manual, in the Powador protect operating instructions and in the instructions for use of the Powador protect on the KACO web site.

At the “Inverter Off” input, instead of the Powador-protect an interface protection device from another supplier can also be connected to actuate the internal interface switches.

EN-US

3.3 Plant layout

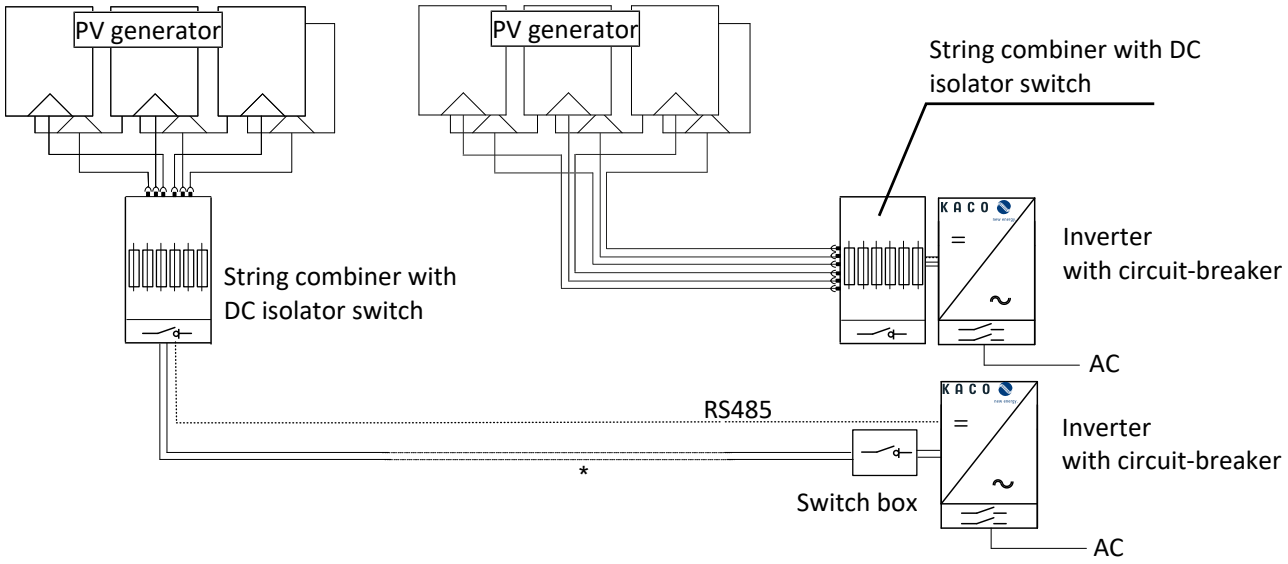

Fig. 6: Circuit diagram with a short or long supply cable to the inverter

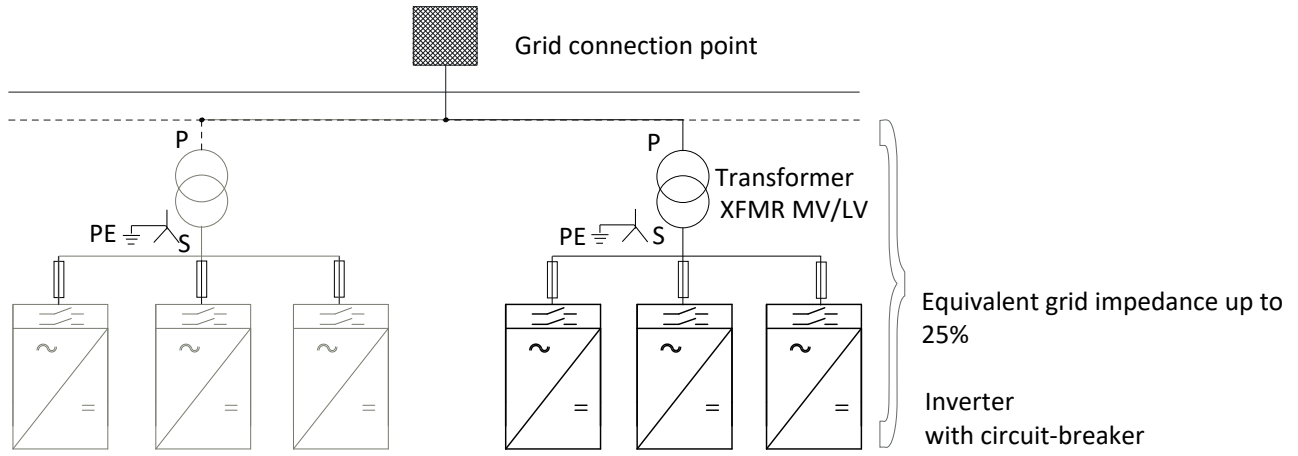

Fig. 7: Circuit diagram from the grid connection point to the inverter

Legend	Definition / Information about the connection
PV generator	The PV generator converts the radiant energy of sunlight into electrical energy.
String combiner	A string combiner can be coupled to the KACO device so that the DC lines can be combined. *) If the supply cable from the PV generator to the device is long, the string combiner can also be installed in the vicinity of the PV generator. An integrated DC isolator switch enables disconnection on the DC-side.
Switch box	A switch box with integrated DC isolator switch enables disconnection from the inverter on the DC-side.
Inverter with circuit-breaker	The PV generator is connected to the device's DC connection.
Trafo **NOTE: The earthing is carried out in the outgoing neutral point.(Dy5) – for more information see Downloads - Application note "Grid Type and impendance requirements ..."**	All three phases need to be set up on the medium-voltage transformer or medium-voltage/high-voltage transformer. In this case, the total impedance of the transformer stations must be below 25%.
Grid connection point	The clean PV-current is made available at the grid connection point.

EN-US

4 Technical data

4.1 Electrical data

blueplanet	92.0 TL3	110 TL3 US	125 TL3
DC Input levels	Input levels (DC)		
Maximum recommended PV generator power	138 kW	165 kW	187.5 kW
MPPrange@Pnom	591 V - 1300 V	705 V - 1300 V	
Working range	591 V-1450 V	705 V-1,450 V	
Nominal voltage	620 V	730 V	
Starting voltage	675 V	805 V	
Open circuit voltage [3]	1500 V	1,500 V	
Max. input current [4]	160 A		183 A
Number of strings	1-2		
Number of MPP controls	1		
Max. short-circuit current (ISC max.)	300 A		
Input source feedback current	0 A		
Polarity safeguard	no		
String fuse	no		
DC overvoltage protection (Type)	1 + 2		

[3] A brief open circuit voltage of up to 1600 V_{dc} (max. 15 hours a year) is admissible for the device.

Due to the brief open circuit voltage exceedance, there is no guarantee that the integrated overvoltage protection will work correctly if the ambient temperature is > 40°C.

[4] The "Max. input current" is the maximal theoretical value for operation with full power when the feed-in power is low. The device is limited to the maximum AC power.

The "Max. short-circuit current ($ISC_{max.}$)" defines together with open circuit voltage (U_{DCmax}) the characteristic of the connected PV generator. This is the relevant value for string sizing and is the absolute maximal limit for inverter protection. The connected PV-Generator must be designed, that the max short circuit current is below or equal to the ISC_{max} of the inverter under all foreseeable conditions and therefore complies with IEC 61730 Class A. In no condition the design may result in a greater short circuit current than ISC_{max} of the inverter [See section 7.6.2 Page 29].

EN-US

blueplanet	92.0 TL3	110 TL3 US	125 TL3
AC Output levels	Output levels (AC)		
Nominal power	92 kVA	110 kVA	125 kVA
Nominal voltage	400 V (3P+PE)	480 V (3P+PE)	
Voltage range: continuous operation	300 V - 460 V	300 V - 552 V	300 V - 552 V
Nominal current	3 x 132.3 A	3 x 132.3 A	3 x 150.5 A
Max. continuous current	3 x 132.3 A		3 x 152 A
Contribution to peak short-circuit current ip	193 A		260.8 A
Initial short-circuit alternating current (Ik" first single-period effective value)	137 A		150.8 A
Short circuit current continuous (max output fault current)	134 A		150 A
Inrush current	5 A [RMS (20ms)]		
Nominal frequency	50/60 Hz		
Frequency range	45 - 65 Hz		
Reactive power	0-100 % Snom		
cos phi	0.3 - 1 ind/cap		
Number of feed-in phases	3		
Distortion factor (THD)	< 3 %		
Max. voltage range (up to 100 s)	500 V	600 V	
AC overvoltage protection (Type)	Base		

blueplanet	92.0 TL3	110 TL3 US	125 TL3
Max. efficiency	98.9 %	99.1 %	98,98 %
European efficiency	98.6 %	98.8 %	98.73 %
CEC efficiency	98.6 %	98.8 %	98.70 %
Self consumption: Standby	< 10 W		
Infeed from	> 200 W		
Protection class / over voltage category	I / III (AC) II (DC)		
Transformer	no		
Grid monitoring	Country-specific		
Distribution system	TN-C system, TT system, Solid grounded wye		

EN-US

4.2 General data

General data	
Display	LEDs
Control elements / operating control	Web server
Menu language	EN; DE; FR; IT; ES; PL; NL; PT; CZ; HU; SL; TR; RO
Interfaces	2 x Ethernet, USB, 2x RS485 (1x reserved for string combiner com.)
Fault signal relay	yes (integrated switch)
DC switch / AC switch	no / yes (XL version) / no
Cooling	temp. regulated fan, max air throughput 364 m³/h
Number of fans	3x outside, 1x inside
Noise emission	<60 db(A)
Housing material	AL
H x W x D	28,30 inch x 28,30 inch x 18,11 inch
Weight	172 lb
Safety	EN 62109-1, EN 62109-2
Safety	+ UL62109-1, UL1741, CSA-C22.2 No.107.1, CSA-C22.2 No.62109-1, CSA-C22.2 No.62109-2
Footnote	Compliant with IEEE 1547a-2014 (Amd. 1)”
Grid connection directive	Overview: see homepage, download area

4.3 Environmental data

Environmental conditions	
Max. installation height	9842 ft (Derating at 6561 ft)
Distance to coastline from installation	>1640 ft
Betriebstemperaturbereich von	-13 °F - 140 °F
Power derating from	> 113 °F BP 92.0 + BP 110 TL3 US > 95 °F BP 125 US
Protection rating	IP66 /NEMA 4X
Relative humidity, non-condensing (in operation)	100 %

4.4 Accessories

Accessory articles	KACO order no.
KACO blueplanet DC-Breaker	1001860
Bending box	1001917 (absolutely mandatory for UL market!)

Accessory articles	KACO order no.
Bending box	1001917
AC inverter input plate kit	1001882 (double row) / 1001906 (M63/32)
AC inverter overvoltage protection kit	1001884
DC inverter overvoltage protection kit	1001885
LAN inverter overvoltage protection kit	1001886
RS485 inverter overvoltage protection kit	1001887
PID connection set	1001888

Accessory articles	KACO order no.
WLAN adapter, Digitus 150N micro	3013222

Accessory articles	KACO order no.
Replacement fuses (10x85mm 1500V 5A PID)	1001883

EN-US

5 Transportation and Delivery

Every product leaves our factory in perfect electrical and mechanical condition. Special packaging ensures that the devices are transported safely. The shipping company is responsible for any transport damage that occurs.

5.1 Scope of delivery

- Inverter
- Mount
- Installation kit
- Manual [online] / Quickguide [multi-language]

Checking the scope of supply

1. Inspect your device thoroughly.
2. Immediately notify the shipping company in case of the following:
   - Damage to the packaging that indicates that the device may have been damaged.
   - Obvious damage to the device.
3. Send a damage report to the shipping company immediately.
4. The damage report must be received by the shipping company in writing within 6 days following receipt of the device. We will be glad to help you if necessary.

5.2 Transporting the unit

⚠ CAUTION

Hazard due to impact; risk of breakage to the device!

1. Pack the device securely for transport.
2. Transport the device using the intended carrying handles of the packaging box.
3. Do not expose the device to any shocks.

For safe transportation of the product, use the hand recesses in the carton.

Packaging	Folding cardboard box
Height x width x depth	31,1x29,9x21,6 inch
Total weight	182 lb

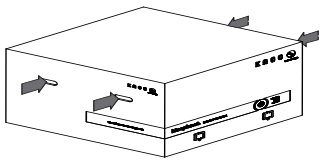

Fig. 8: Transporting the device

5.3 Installation tools

The abbreviations listed in the following table are used when referring to the tools and tightening torques to be used in all assembly/installation/maintenance and disassembly instructions.

Shortsign (en)	Shape of the connector
W	External hex
A	Internal hex
T	Torx
S	Slot

Tab. 2: Key and description of tool codes

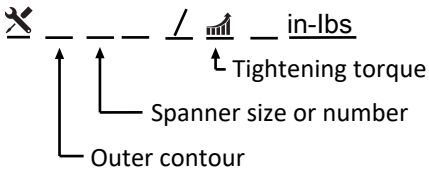

Fig. 9: Presentation format

EN-US

6 Assembly and preparation

6.1 Selecting an installation location

⚠ DANGER

Risk of fatal injury due to fire or explosions

Fire caused by flammable or explosive materials in the vicinity of the device can lead to serious injuries.

1. Do not mount the device in an area at risk of explosion or in the vicinity of highly flammable materials.

⚠ CAUTION

Property damage due to gases that have an abrasive effect on surfaces when they come into contact with ambient humidity caused by weather conditions!

The housing of the device may be seriously damaged by gases (ammonia, sulfur, etc.) if it comes into contact with ambient humidity caused by weather conditions.

1. If the device is exposed to gases, it must be installed in a location that is visible.
2. Perform regular visual inspections.
3. Immediately remove any moisture from the housing.
4. Ensure that there is sufficient ventilation at the installation location.
5. Immediately remove dirt, especially on vents.
6. Failure to observe these instructions may result in damage to the device which is not covered by the warranty.

NOTE

Access by maintenance personnel for service

Any additional costs arising from unfavorable structural or mounting conditions shall be billed to the customer.

Installation space

- As dry as possible, climate-controlled, the waste heat must be dissipated away from the device.
- Unobstructed air circulation.
- Close to the ground, accessible from the front and sides without requiring additional resources.
- In outdoor areas, KACO new energy recommends protecting the device from direct weather exposure and sunlight. Realisation through constructional measures (e.g. wind catchers) in order to reduce thermal heating of the components, earlier derating and greater wear of the fans.

Installation surface

- Must have adequate load-bearing capacity
- Must be accessible for installation and maintenance
- Must be made out of heat-resistant material (up to 194 °F)
- Flame-retardant
- Minimum clearances to be observed during installation: [See figure 17 [▸ Page 22]

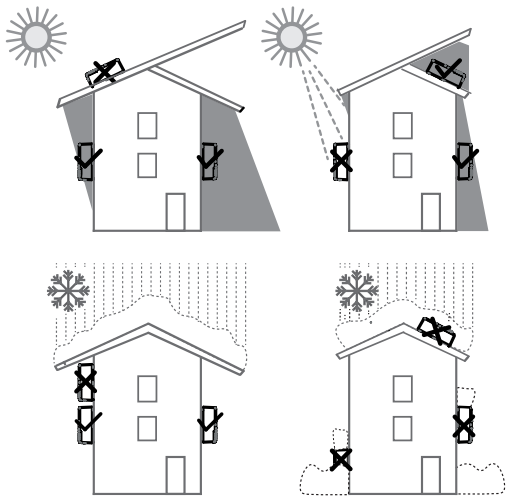

Fig. 10: Device for outdoor installation

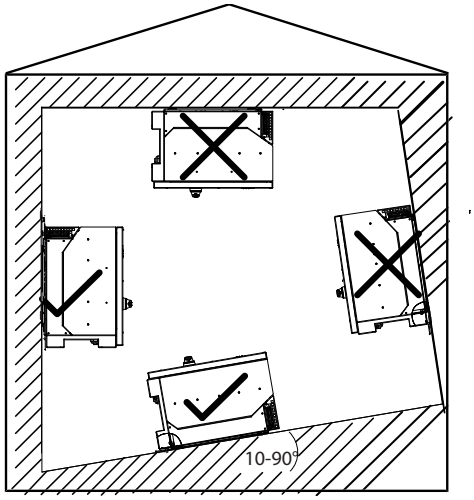

Fig. 11: Permissible installation location

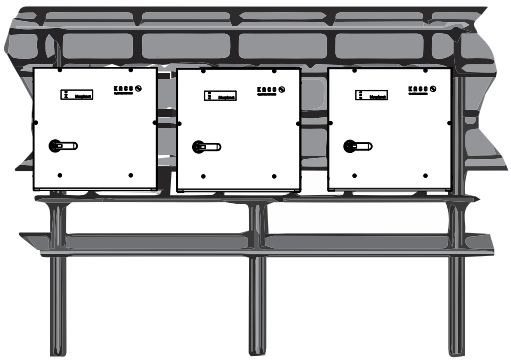

Fig. 12: Free-standing installation beneath PV system

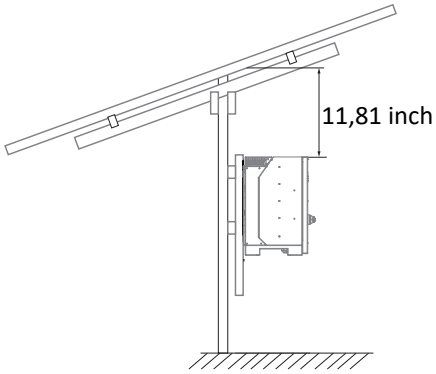

Fig. 13: Mounting advice for installation beneath PV system

6.2 Unpacking the unit

⚠ CAUTION

Risk of injury if the body is overloaded!

Lifting the device for transportation, to change location and during installation can lead to injuries (e.g. spinal injuries).

1. Only lift the device using the openings provided.
2. The device must be transported and installed by at least 2 persons.

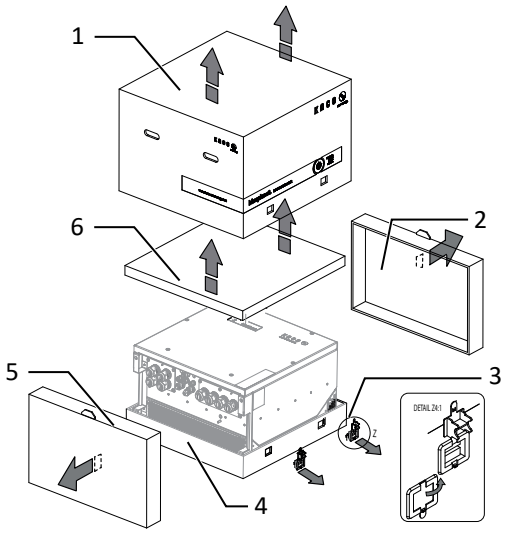

Fig. 14: Opening the cardboard packaging

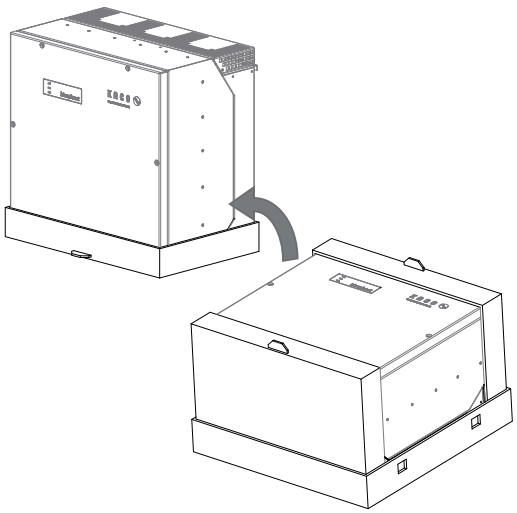

Fig. 15: Setting the device upright

EN-US

Legend			
1	Hood	4	Base section
2	Upper side section	5	Lower side section
3	Clip lock (4x)	6	Cardboard packaging with mount and mounting kit

↻ The device is transported to the installation location.

1. Remove the plastic strap from the pallet and packaging.
2. Pull the clip lock off the packaging.
3. Pull the hood upwards to remove it and place the cardboard packaging to one side together with the mount and accessories.
4. Set the device upright with the base section and side sections.
5. Remove the uppermost side section and base section from the device.

⇨ If the device is in the correct installation position: Proceed with the installation of the mount.

6.3 Fastening the mount

⚠ WARNING

Hazard when using unsuitable fixing materials!

If unsuitable fixing materials are used, the device could fall and persons in front of the device may be seriously injured.

1. Use only fixing materials that are suitable for the mounting base. The fastening materials supplied are only to be used for masonry and concrete.
2. Only install the device in an upright hanging position.

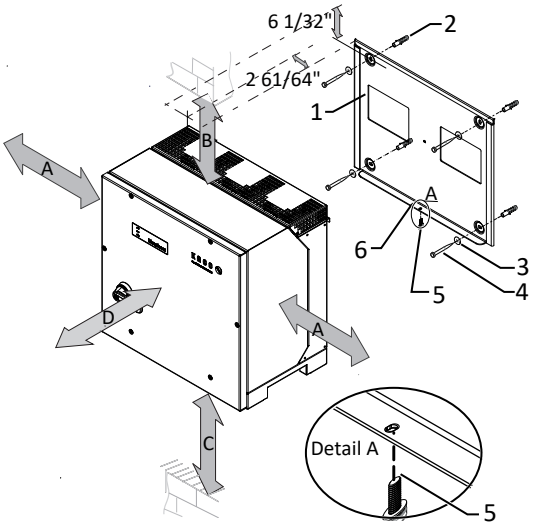

Fig. 16: Minimum clearances for wall mounting

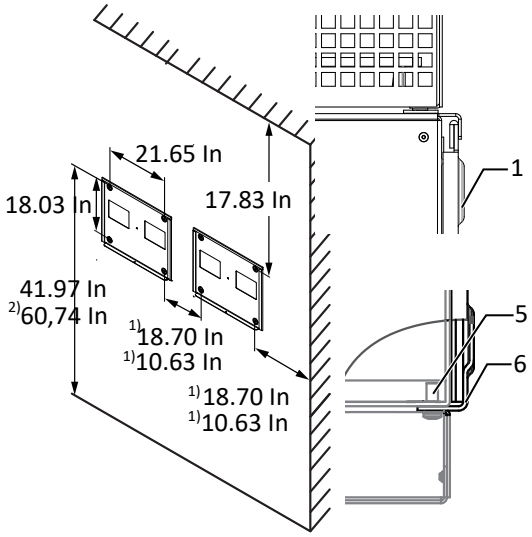

Fig. 17: Wall mounting

Legend			
1	Mount	4	Screw for mounting (4x) [SW 13 / [See section 6.3 Page 22]]
2	Fastening anchors [S12-Ø0.47 In / 0,98 In]	5	Securing screw (1x)
3	Lock washer	6	Lug to mount the device
A	Minimum clearance: 4.72 In	1)	Minimum clearance excluding device:10.63 In
	Recommended clearance: 15.75 In	1)	Recommended clearance excluding device:18.70 In
B	Minimum clearance: 11.81 In	-	-
C	Minimum clearance: 19.69 In	-	-
D	Recommended clearance: 39.37 In	2)	Recommended clearance with DC breaker:60,74 In

EN-US

↻ Cardboard packaging with mount and mounting kit removed from the packaging and opened.

1. Check condition and minimum room height according to specified dimensional data.
2. Mark the suspension position on the wall surface according to the bore holes in mounting plate.

. **NOTE: The minimum clearances between two devices, or the device and the ceiling/floor have already been taken into account in the diagram.**

3. Fix the mount to the wall using suitable mounting fixtures from the mounting kit.

. **NOTE: Make sure that the mount is oriented correctly.**

⇨ Proceed with the installation of the device.

6.4 Installing and securing the device

⚠ CAUTION

Risk of injury from improper lifting and transport.

Lifting the device improperly can cause the device to topple and fall over.

1. Only ever raise the device vertically using the openings provided.
2. Use a climbing aid for the chosen installation height.
3. Wear safety gloves and safety shoes when lifting and lowering the device.

NOTE

Power reduction due to heat accumulation!

If the recommended minimum clearances are not observed, the device may go into power regulation mode due to insufficient ventilation and the resulting heat build-up.

1. Observe the minimum clearances and provide for sufficient heat dissipation.
2. Any objects on the housing of the device must be removed prior to operation.
3. Make sure that foreign objects cannot hinder heat dissipation following installation of the device.

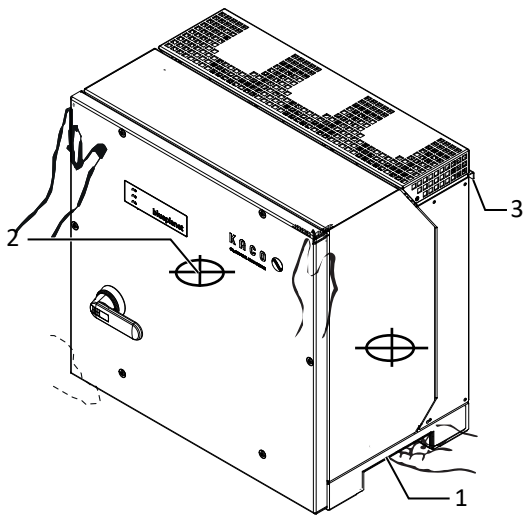

Fig. 18: Lifting the device by the opening

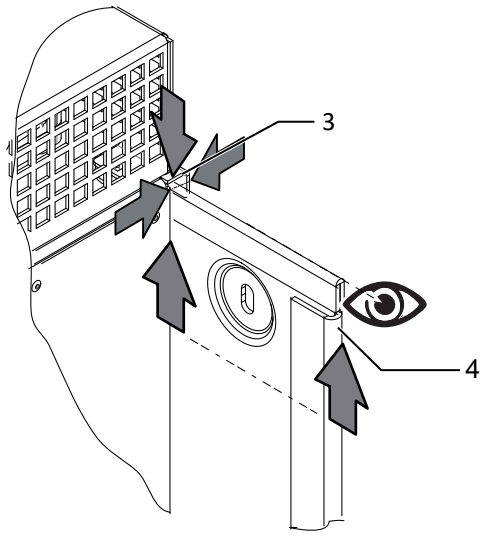

Fig. 19: Fitting the device onto the mount

Legend			
1	Opening	3	Mounting bracket
2	Center of gravity	4	Mount

Lifting and mounting the device

↻ The mount has been installed.

EN-US

1. Lift the device using the lateral openings. Have regard to the position of the device's center of gravity!

. **NOTE: Do not lift the device by the lid or cover!**

2. Fit the device onto the upper mount by means of the mounting bracket. Fit the device onto the lower mounting bracket in full so that the device sits flush with its rear side on the mount. ([See figure 17 [▶ Page 22]).
3. Insert the screw provided into the lug of the mount and [T30 / 17.70 In-Ibs] ([See figure 16 [▶ Page 22]).

. **NOTE: Alternatively: At this point, the screw mentioned above can be replaced with a special-purpose screw for protection against theft.**

⇨ The device is installed. Proceed with the electrical installation.

⚠ CAUTION

Damage to property due to condensation build-up

If the device is pre-assembled, moisture can get into the internal area via the dust-proof screw connections. The condensate that forms can cause damage to the device during installation and start-up.

✓ Keep the device sealed during pre-assembly and don't open the connection area until installation.

1. Seal off any screw fittings using sealing covers.
2. Check the interior space for any condensation water prior to electrical installation and, if necessary, allow it to dry out sufficiently.
3. Immediately remove any moisture from the housing.

EN-US

7 Installation

7.1 General

↻ **NOTE: S version: Gerät extern am Stringsammler abschalten**.

1. Switch the DC isolator switch from 1 (ON) to 0 (OFF).
2. Press in the safety catch (1) from behind.
3. Attach the hanging lock (2) to the safety catch.

. **DANGER! A measurement in a live state may be required for tests. Only appropriately qualified electricians authorised by the mains supply network operator are permitted to open and maintain the device.**

. **DANGER! Observe all safety regulations for protection against contact with live parts.**

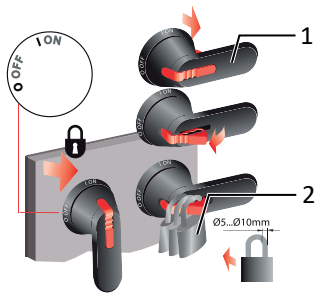

Fig. 20: Secure the DC isolator switch to prevent it from being switched back on

1 Switch with securing bracket
2 Padlock

7.2 Opening the device

↻ The device has been installed on the mount.

↻ Wipe any moisture off the frame of the housing cover using a cloth.

☞ Undo the 6 screws (2) and carefully remove the housing cover (1) [🛠T_25]

☞ Be careful not to damage or soil the seals or optical fibers when setting the housing cover down.

⇨ Proceed with the installation of the device.

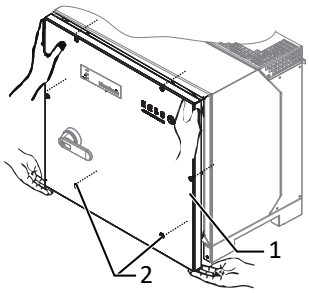

Fig. 21: Removing the housing cover

7.3 Surveying the connection area

The connection point for the AC supply is situated inside the housing. The DC input source is also connected inside the housing.

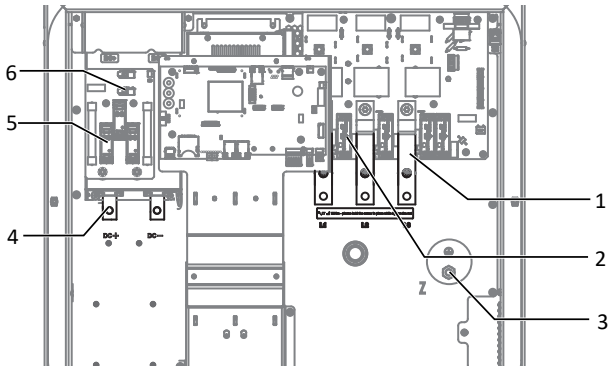

Fig. 22: Connection area on DC side (left) / AC side (right)

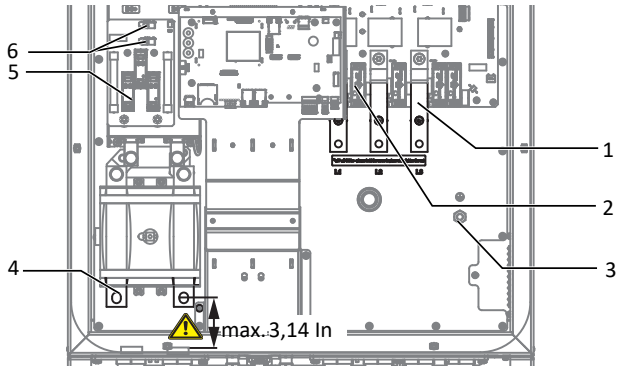

Fig. 23: Connection area (XL - Version)

Key			
1	AC connection point	4	DC connection point
2	AC overvoltage protection base	5	DC overvoltage protection
3	AC earthing bolt	6	PID connection point

EN-US

7.4 Making the electrical connections

NOTE

Select conductor cross-section, safety type and safety value in accordance with the following basic conditions:

Country-specific installation standards; power rating of the device; cable length; type of cable installation; local temperature

NOTE

All electrical installations must be carried out in accordance with local electrical standards and conform to the National Electrical Code® ANSI / NFPA 70 or the Canadian Electrical Code® CSA C22.1.

This document does not replace any local, federal or national laws, regulations or regulations that apply to the installation and use of the product, and is not intended to replace them, including the applicable electrical safety regulations.

All installations must conform to the laws, regulations and standards that are applicable in the country of installation. KACO new energy does not assume any responsibility for compliance or lack of compliance with such laws or codes in connection with the installation of the product.

7.4.1 Supply line and fuse requirements

DC-side	
Max. cable cross-section	450 kcmil
Min. cable cross-section	in accordance with local installation standards
Diameter of cable for cable fitting	0,63 - 1,10 inch
Cable lug dimension b width max.	1,65 inch
Length of insulation to be stripped off	Depending on the cable
Recommended cable type	Solar cable
Cable lug Ø connection bolt	Bore for M10 screw
Tightening torque	265.50 In-lbs
Fitting for DC connection	M40
Torque for cable fitting	88.5 In-lbs
AC-side	
Max. cable cross-section	450 kcmil [5]
Min. cable cross-section	in accordance with local installation standards
Diameter of cable for cable fitting	0,63 - 1,10 inch
Length of insulation to be stripped off	Depending on the cable lug
Cable lug Ø connection bolt	Bore for M10 screw
Tightening torque	265.50 In-lbs
Connection type	Cable lug (use the appropriate cable lug depending on the cable material!)
Cable lug dimension w - maximum width	1,65 inch
Ground conductor connection	M10
Ground conductor connection tightening torque	88.5 In-lbs
Electrical protection in installation (provided by the customer)	max. 250A
Fitting for AC connection	M40
Torque for cable fitting	88.5 In-lbs

[5] This requires the optionally available input plate! [See section 4.4 Page 17]

EN-US

Interface	
Diameter of cable for cable fitting	(2x) 0,31 - 0,67 inch
Torque for cable fitting	44.25 In-lbs
RS485 connection type	Spring-type terminal
RS485 terminal cable cross-section	23 - 15 AWG
Diameter of cable for cable fitting	(3x) 0,19 - 0,39 inch
	22 In-lbs
Ethernet connection type	RJ45

7.5 Connecting the device to the mains supply

7.5.1 Preparing the grid connection

- ↻ A connection cable with 4 cores (4 individual cores or multi-core) up to max. cable cross-section 0,63 In - is available on the device.
- ↻ Time required for AC connection: 30 min
- ↻ Nominal grid voltage matches the VAC nom name plate details.

1. For improved accessibility: Unfasten the AC input plate using the 6 screws [🔧 T_30]
2. Unfasten the cable fitting for AC connection and PE earth (ground) [🔧W_46].
3. Remove sealing plug.
4. Guide the AC leads through the cable fittings.
5. Strip the insulation from the AC cables.
6. Strip the insulation from individual wires for L1 / L2 / L3 (ABC) and PE (ground) so that the strand and insulation can be pressed into the cable lug shaft.

. **CAUTION! Risk of fire due to chemical corrosion. Cable lugs must be suitable for the conductor material and copper busbars being used.** [6]

7. Press on cable lug.
8. Affix shrink tubing (not included as standard) over the shaft of the ring cable lug of the AC cable.
9. Fasten the input plate using the 6 screws [🔧T_30 / 53.10 In-lbs]

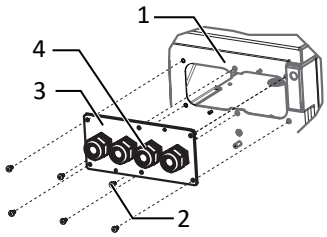

Fig. 24: Removing the AC input plate

1	Housing base – AC-side
2	Screws for mounting
3	Input plate
4	Cable fitting

[6] When using aluminum cable lugs we recommend using cable lugs with galvanic tin plating or, alternatively, AL/CU cable lugs with suitable AL/CU washers.

Otherwise, with the electrolytes present (e.g. Condensation water), the aluminum could be destroyed by the copper bus bars.

EN-US

7.5.2 Making the grid connection

4-pole connection, TN, TT system

↻ Grid connection is prepared.

1. Loosen nut and lock washer at the marked grounding point.
2. Lay the grounding cable onto the grounding point. Secure it with the nut and lock washer provided [W_17 / 88.50 In-lbs]. [7]
3. Place the cable lug of cores L1 / L2 / L3 on the busbar in accordance with the labeling and secure it with a nut, screw and lock washer (fastening elements in scope of supply) [W_17 / 265.52 In-lbs].
4. Check secure fit of all connected cables.

⇨ The device is connected to the power grid.

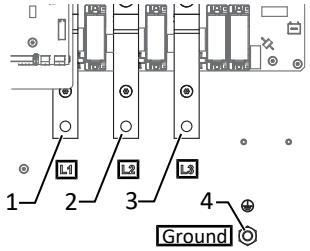

Fig. 25: 4-Pole AC grid connection

1	L1 busbar
2	L2 busbar
3	L3 busbar
4	Ground - earthing point

Residual current monitoring unit (RCMU):

The device is equipped with an AC/DC-sensitive residual current monitoring unit in accordance with IEC/EN 62109-2 and VDE 0126-1. The AC/DC-sensitive residual current monitoring unit monitors AC and DC residual currents and redundantly disconnects the device from the grid in the event of residual current jumps of > 30 mA. In the event of a malfunction in the residual current monitoring unit, all poles of the device are immediately disconnected from the public grid. The functionality of the integrated RCMU is described in the document 'RCMU functionality +device type' on our website.
If local regulations require an external residual current circuit breaker (RCD), the recommendations in the document "Confirmation of compatibility with residual current circuit breakers (RCD)" on our website must be observed.

NOTE

Observe the general earthing recommendation of the existing mains system.

NOTE

If an external residual current circuit breaker is necessary due to the installation specification, a type A residual current circuit breaker must be used.

If the type A is used, the insulation threshold must be set to greater than/equal to (≥) 200 kOhm in the “DC parameters” menu [see [See section 9.4.2 Page 54]].

For questions regarding the appropriate type, please contact the installer or our KACO new energy customer service.

[7] If the connection is made in a TN-C grid, connect the PEN grounding cable to the ground earthing point.

EN-US

7.6 Connecting the PV generator to the device

7.6.1 Checking the PV generator for a ground fault



⚠ DANGER

Risk of fatal injury due to electric shock!

Severe injuries or death will result if the live connections are touched. When there is solar radiation on the PV generator, DC voltage will be present at the open ends of the DC cables.

1. Activate the connection power at the switchbox or string combiner with the DC isolator switch.
2. The DC connection is intended exclusively for PV generators. Other sources fall within the scope of improper operation (e.g. batteries).
3. Only touch the PV generator cables on the insulation. Do not touch the exposed ends of the cables.
4. Avoid short circuits.
5. Do not connect any strings with a ground fault to the device.

Ensuring that there is no ground fault

1. Measure the DC voltage between the protective earth (PE) and the positive cable of the PV generator.
2. Measure the DC voltage between the protective earth (PE) and the negative cable of the PV generator.
   ⇨ If stable voltages can be measured, there is a ground fault in the DC generator or its wiring. The ratio between the measured voltages gives an indication as to the location of this fault.
3. Rectify any faults before taking further measurements.
4. Measure the electrical resistance between the protective earth (PE) and the positive cable of the PV generator.
5. Measure the electrical resistance between the protective earth (PE) and the negative cable of the PV generator.
   ⇨ In addition, ensure that the PV generator has a total insulation resistance of more than 2.0 MOhm, since the device will not feed in if the insulation resistance is too low.
6. Rectify any faults before connecting the DC generator.

7.6.2 Configuring the PV generator

⚠ CAUTION

Damage to components due to faulty configuration

In the expected temperature range of the PV generator the values for the no-load-voltage and the short circuit current must never exceed the values for U_{DCMAX} and I_{SCMAX} in accordance with the technical data.

1. Observe limit values in accordance with the technical data.



NOTE

Dimensioning of the PV generator

The device is designed with a reserve of DC short-circuit current resistance. This enables an overdimensioning of the connected PV generator The absolute limit for the PV generator is the value of the maximal short circuit current ($ISC_{max.}$) and the maximal open circuit voltage ($U_{DCmax.}$). See Footnote under Electrical data

EN-US

7.6.3 Connecting the PV generator



⚠ DANGER

Risk of fatal injury due to electric shock!

Severe injuries or death will result if the live connections are touched. When there is solar radiation on the PV generator, DC voltage will be present at the open ends of the DC cables.

1. Activate the connection power at the switchbox or string combiner with the DC isolator switch.
2. The DC connection is intended exclusively for PV generators. Other sources fall within the scope of improper operation (e.g. batteries).
3. Only touch the PV generator cables on the insulation. Do not touch the exposed ends of the cables.
4. Avoid short circuits.
5. Do not connect any strings with a ground fault to the device.



NOTE

Type and configuration of the PV modules

Connected PV modules must be dimensioned for the DC system voltage in accordance with IEC 61730 Class A, but at least for the value of the AC grid voltage



NOTE

Use of suitable cable lug sizes

Devices with DC switch have a limited connection space ([See section 7.3 Page 25]) The maximum cable lug length of 3,78 In extends into the cable gland to ensure proper function and use [See figure 27 [Page 31].

1. For the UL market, a larger connection space is required by standard. For this purpose, the DC input plate must be replaced by an external bending box (see chapter Accessories under Technical data).

EN-US

↻ Time required for DC connection: 15 min

↻ PV generator checked to ensure there is no ground fault.

↻ A DC cable with 2 x 1 or 2 x 2 cores is available on the device.

↻ DC polarity checked before connection made to device.

1. Activate the connection power at the switchbox or string combiner with the DC isolator switch.
2. For improved accessibility: Secure the DC input plate using the 4 screws [🔧 T_30].
3. Undo the cable fitting for DC connection [🔧W_46]
4. Remove the sealing plug in the cable fitting used.
5. Remove the outer cladding of the DC cables and insert them through the cable fitting.
6. Strip the insulation from the DC cables pursuant to the M10 ring cable lug so that the stranded wire and insulation can be pushed into the shaft of the cable lug.

. **CAUTION! Risk of fire due to chemical corrosion. Cable lugs must be suitable for the conductor material and copper busbars being used** [8].

. **WARNING! Risk of short circuit due to incorrect size of the cable lug! Observe the dimensions for the selection.** [See figure 27 [▷ Page 31]

7. Push the ring cable lug onto DC cores. When crimping, ensure that the ring cable lug is rotated in accordance with the final installation position.

. **CAUTION! Use a shrink tubing (>= 6 kV/mm dielectric strength), as the clearance is insufficient. This prevents a surge in voltage.**

8. Guide the shrink tubing over the uninsulated crimping point and a maximum of 0.79 $^{+0/-0.08}$ inch over the cable insulation and shrink-fit using manual shrink-fitting equipment.
9. Secure the input plate using the 4 screws [🔧T_30 / 53.10 In-lbs]

⇨ DC cable configured. Continue with the connection to the DC filter or DC switch.

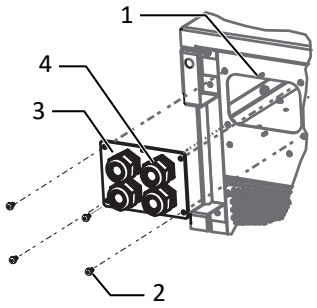

Fig. 26: Removing the DC input plate

1 Housing base – DC side
2 Screws for mounting
3 Input plate
4 Cable fitting

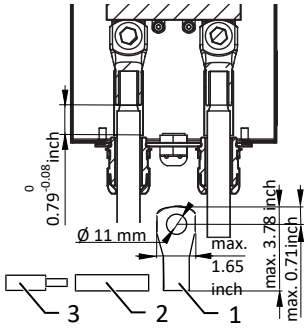

Fig. 27: Configuring the DC cable

1 Cable lug
2 Shrink tubing*
3 DC cable

Connecting the DC cable to the DC filter

↻ DC cables equipped with a ring cable lug [max width b.1,65 In].

1. Place the cable lug of cores DC- and DC+ on the busbar in accordance with the labeling and secure it with a nut, screw and lock washer (fastening elements in scope of supply) [🔧W_17 / 265.52 In-lbs].
2. Check that the connected cables are fitted securely.
3. Tighten the cable fittings [🔧W_46 / 88.50 In-lbs].

⇨ The device is connected to the PV generator.

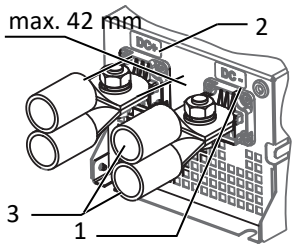

Fig. 28: DC connection with 2 DC+/- inputs

1 DC- busbar
2 DC+ busbar
3 Cable lug (optional with 2 DC+/- inputs)

[8] When using aluminum cable lugs we recommend using cable lugs with galvanic tin plating or, alternatively, AL/CU cable lugs with suitable AL/CU washers.

Otherwise, with the electrolytes present (e.g. Condensation water), the aluminum could be destroyed by the copper bus bars.

EN-US

Connecting the DC cable to the DC switch

1. For mounting the DC cables, use a torque wrench and the open-end wrench included in the scope of delivery for counterholding.
2. Pre-fit DC cable pair with the pre-installed screw and counternut onto the DC+ and DC busbar of the DC switch.
3. **Option for 2 cable pairs**: Insert spacer sleeve between 2 DC cables and pre-assemble in pairs with the provided screw and counternut onto the DC+ and DC busbar of the DC switch.
4. DC-Eingangsplatte an Gehäuseboden hochschieben und befestigen. [T_30 / 53.10 In-lbs]
5. Secure the screws and counternuts onto the DC+ and DC busbar of the DC switch. [W_16/17] / 265.52 In-lbs]
6. Tighten the cable screw fitting. [W_46 / 88.50 In-lbs]

⇨ The device is connected to the PV generator.

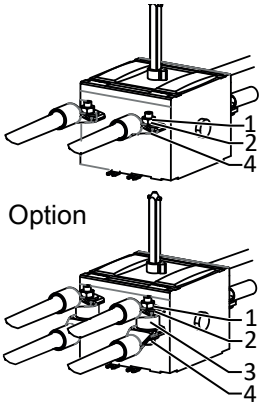

Fig. 29: Fit DC cables to switch

1	Nut
2	Lock washer
3	Spacer sleeve
4	Fixing screw

7.7 Inserting the overvoltage protection

AC overvoltage protection

↻ Absence of AC/DC voltage ensured and device open [[See section 7.2 Page 25]].

↻ On initial delivery, remove intermediate plug-in frame on the AC surge protection device.

☞ Position and secure intermediate plug-in frame onto AC surge protection socket.

NOTE: Different AC surge protection modules are used. The designation on the PCB must match the module code (GTD/MOV).

1. Insert AC surge protection modules individually into the AC surge protection socket.[See installation instructions in the [See section 4.4 Page 17] package.
2. Remove SPD monitoring jumper for automatic monitoring.
3. Remove SPD monitoring jumper for automatic monitoring.

⇨ Proceed with the installation of the device.

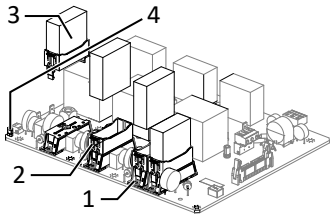

Fig. 30: Upgrading the AC surge protection

1	AC surge protection socket
2	AC intermediate plug-in frame
3	AC surge protection module (4 slots)
4	SPD monitoring jumper

DC overvoltage protection

↻ **NOTE: Absence of AC/DC voltage ensured.**

. **NOTE: The coding at the base plug-in position must match the coding on the module.**

1. Insert the DC overvoltage protection modules into the DC base one after another. [See installation instructions in the [See section 4.4 Page 17] package]
2. Secure new modules using the locking latch.
3. Remove SPD monitoring jumper for automatic monitoring.
4. Ensure that all protective elements are properly secured.

⇨ Proceed with the installation of the device.

EN-US

Installing the RS485 overvoltage protection

↻ Ensure that the device is completely free of AC/DC voltage.

↻ The device has been opened [[See section 7.2 Page 25]].

. **NOTE: Clip the RS485 base element for overvoltage protection bottom end first into the top-hat rail as shown in the drawing.**

1. The following color coding scheme must be adhered to for the internal/external RS485 cable:
   Data A => white (WH); Data B => blue (BU); GND => violet (VT)
2. The internal RS485 cable is to be connected to the overvoltage socket on the socket. [See installation instructions in the [See section 4.4 Page 17] package]

. **NOTE: At input/output on the RS485 external, the output of the overvoltage base is to be assigned twice.**

3. Insert the RS485 through the interface cable fitting into the connection area.
4. Remove the insulation from the RS485 cable [approx. 20 mm] and isolate the individual wires [8 mm].
5. Adern mit Adernendhülsen bestücken und nach Anschlussschema an das RS485-Basiselement anklemmen [S_M3 / 4,42 In-lbs].
6. Connect the output cable with RS485 connector (included in the scope of supply of the overvoltage kit) to the RS485 base element and insert the RS485 connector into the RS485 socket on the communication circuit board.
7. Affix the output cable to the cable guide.
8. Insert the RS485 overvoltage protection module into the base.
9. Ensure that the protective elements are properly secured.

⇨ Proceed with the installation of the protective elements.

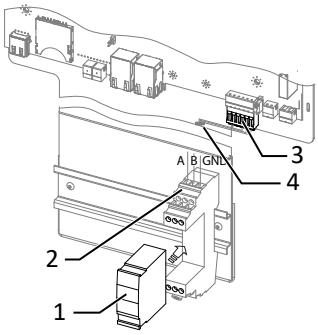

Fig. 31: Inserting the RS485 overvoltage protection

1	RS485 overvoltage protection module (optional)
2	RS485 overvoltage protection base assembly on top-hat rail
3	RS485 communication connector
4	Cable guide

Installing the Ethernet surge protection

↻ It has been ensured that there is no AC/DC voltage present.

1. Clamp Ethernet overvoltage protection module on the top hat rail from top to bottom.
2. Connect the short Ethernet cable with an Ethernet port on the communication board. [See installation instructions in the [See section 4.4 Page 17] package
3. Insert Ethernet cable through the corresponding cable fitting and insert into overvoltage protection module.

⇨ Proceed with the installation of the device.

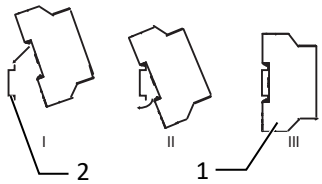

Fig. 32: Inserting the Ethernet overvoltage protection

1	Ethernet overvoltage protection module (optional)
2	Top-hat rail

7.8 Creating equipotential bonding

NOTE

Depending on the local installation specifications, it may be necessary to earth the device with a second ground connection. To this end, the threaded bolt on the underside of the device can be used.

EN-US

↻ The device has been installed on the mount.

1. Strip the cable for equipotential bonding.
2. Furnish the stripped cable with an M8 ring cable lug.
3. Lay the cable for equipotential bonding onto the grounding point and attach with an additional M8 nut and lock washer [W_13/ 88.50 In-lbs].
4. Check that the connected cable is fitted securely.

⇨ The housing is included in the equipotential bonding.

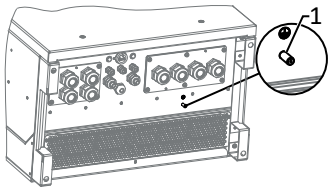

Fig. 33: Additional grounding point

1 Earthing bolt

7.9 Connecting the interfaces

7.9.1 Overview

⚠ DANGER

Risk of fatal injury due to electric shock!

Severe injuries or death may result from improper use of the interface connections and failure to observe protection class III.

1. The SELV circuits (SELV: safety extra low voltage) can only be connected to other SELV circuits with protection class III.

⚠ CAUTION

Damage to the device from electrostatic discharge

Components inside the unit can be damaged beyond repair by static discharge.

1. Observe the ESD protective measures.
2. Earth yourself before touching a component by touching a grounded object.

All interfaces are located on the communication circuit board (HMI board) inside the housing.

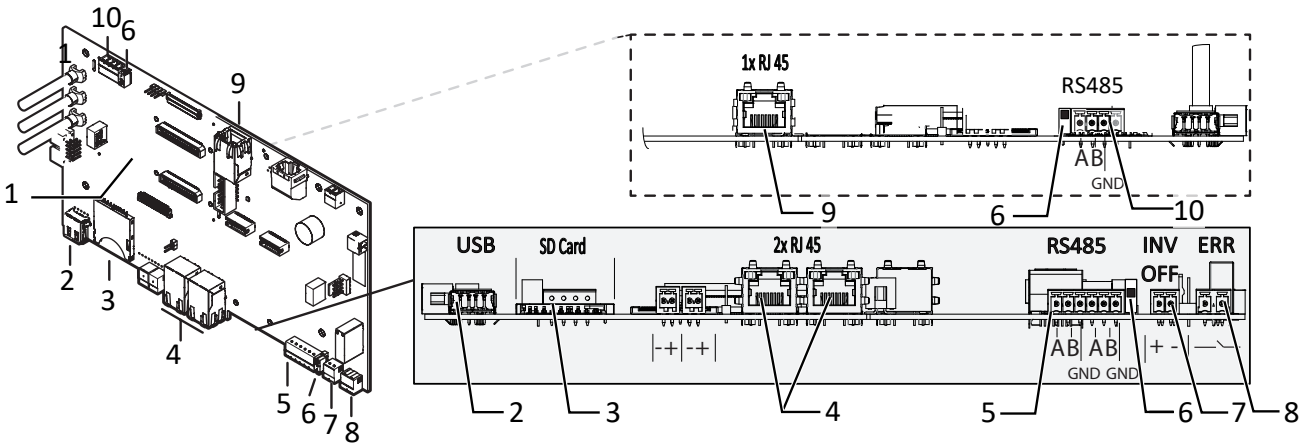

Fig. 34: Communication circuit board (HMI board)

1	Communication circuit board	6	DIP switch - activate terminator (2x)
2	USB socket	7	INV OFF - connection for external grid protection component - 24V(+/- 20%) / 1A (at least 15mA)
3	SD slot	8	ERR – fault signal relay
4	Ethernet for network connection DHCP	9	Ethernet – only for starting up by means of static IP ([See section 8.4.2 Page 42])
5	RS485 - default	10	RS485 - connection for string combiner (CON 200)

EN-US

7.9.2 Inserting and laying the cables

↻ Time required for connecting the interface cables: 10 min

1. Observe the instructions on the recommended cable for the interface used.
2. Unfasten the cover on the cable fitting [W_20].
3. Feed the signal cable into the connection area.

⇨ Signal cable inserted.

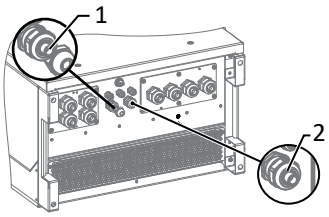

Fig. 35: Insert signal cables

1 Cable fitting for routing the Ethernet cable

2 Cable fitting for routing the signal cable

Inserting the Ethernet cable

1. Unfasten and remove the cover on the cable fitting [W_29].
2. Remove the sealing insert.
3. Thread the connection cable through the cover of the cable fitting and the sealing insert.
4. Insert the sealing insert into the cable fitting.
5. Feed the connection cables into the connection area.

⇨ Ethernet cable inserted.

7.9.3 Connecting via Ethernet

NOTE

The connection plug of an RJ45 cable is larger than the opening of an M25 cable fitting when it is installed. For this reason, remove the sealing insert before installation and thread the Ethernet cable outside of the cable fitting through the sealing insert.

NOTE

Use a suitable category 6 network cable. The maximum distance between two devices is 100 m (328 ft). The Ethernet switch allows for the repeater function and supports auto-sensing. Ensure that the cable is correctly assigned. You can use both crossed and 1:1 protectively-wired Ethernet connection cables.

↻ Connecting cable inside the device.

1. Plug in an Ethernet cable at one of the two Ethernet ports on the communication circuit board.
2. Check that the connecting cable is fitted securely.

⇨ Connect additional signal cables.

Connecting the device to the network

↻ The Ethernet cable has been connected to the device.

1. Connect the Ethernet cable to the network or a computer.
2. Configure the Ethernet settings and the webserver in the Settings menu.

7.9.4 Connecting the RS485 bus

NOTE

Ensure that the DATA+ and DATA- wires are properly connected. Communication is not possible if the wires are reversed. Different manufacturers do not always interpret the standard on which the RS485 protocol is based in the same way. Note that the wire designations (DATA+ and DATA-) for wires A and B may vary from one manufacturer to another.

EN-US

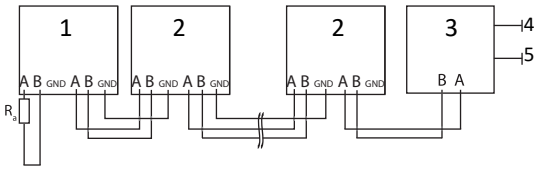

Fig. 36: RS485 interface wiring diagram

1 Inverter, terminal unit	4 Communication
2 Inverter	5 Power supply
3 Data monitoring unit	

Properties of the RS485 data line	
Maximum length of the RS485 bus line	Max. 3940 ft This length can be reached only under optimum conditions. Cable lengths exceeding 1640 ft generally require a repeater or a hub.
Maximum number of connected bus devices	99 devices + 1 data monitor device or max. 49 devices and 49 string combiners + 1 data monitor device
Data cable	Twisted, shielded.
Recommendation	Black twisted pair for laying cable outside and in the ground, (2x2) max. 20 AWG Gray twisted pair for dry and damp indoor spaces, (2x2) max. 20 AWG

Compatibility list of RS485 smart meter

↻ To prevent interference during data transmission:
- Observe the wire pairing when connecting DATA+ and DATA-.
Do not lay RS485 bus lines in the vicinity of live DC/AC cables.

1. Loosen the cable fitting [W_20]
2. Thread the connection cables through the cable fitting.
3. To place the shield, strip the RS485 data cable at the position of the shield clamp up to the wire mesh (approx. 20mm).
4. Connect the connection cables to the corresponding connection terminals.
5. The following must be connected to all inverters and to the data monitor unit in the same way:
   - Wire A (-) to wire A (-) and wire B (+) to wire B (+)
   - GND to GND
6. Tighten cable fittings [W_20 / 13,27 In-lbs].

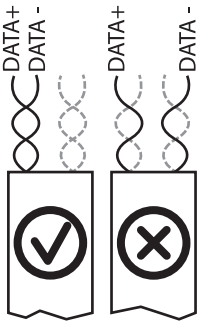

Fig. 37: Assignment of twisted-pair wires

NOTE

When using the RS485 bus system, assign a unique address to every bus device (inverter, sensor) and terminate the terminal units (see the “Settings” menu) .

↻ Check whether one of the devices represents the terminal unit.

☞ Only activate the terminating resistor on the communication circuit board of the terminal unit using the DIP switch.

⇨ RS485 connection made. Lay signal cable correctly.

7.9.5 Connecting the fault signal relay

The contact is designed as an N/O contact and is labeled "ERR" or "Relay" on the circuit board.

Maximum contact load	
DC	30 V/1A

EN-US

↻ Connection area cover open.

1. Loosen the cable fitting to pass the signal cable through [W_20]
2. Thread the connection cables through the cable fitting.
3. Attach the connection cables to the terminals. [See section 7.9.1 Page 34]
4. Tighten cable fitting [W_20 / 13,27 In-lbs].

7.9.6 Connecting external grid protection components

Connect the Powador-protect (only in the case of 380/400V blueplanet 87.0TL3 / 92.0TL3 / 105TL3)

↻ The cable to the external grid protection device is available on the device.

↻ Cover of the device has been opened.

1. Undo the cable fittings [W_20]
2. Pass the connection cable through the cable fittings.
3. Connect wire A (+) to the terminal marked "INV OFF+" on the first device via the "DO1" terminal of the protective device.
4. Connect wire B (-) to the terminal marked "INV OFF-" on the first device via the "GND" terminal of the protective device..
5. Connect the other devices to one another as follows:
   - wire A (+) to wire A (+) and wire B (-) to wire B (-).
6. Tighten cable fitting [W_20 / 13,27 In-lbs]
7. After commissioning in the menu entry Features / Functions configure the `external` Overvoltage protection - in Powador-protect.

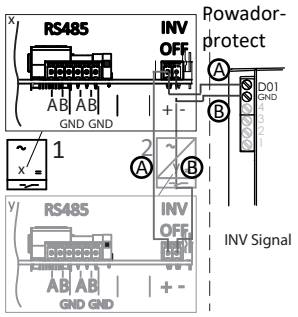

Fig. 38: Connect the device to Powador-protect

Connecting a foreign device

NOTE: When using a third-party device, a separate power supply is also required. Some third-party devices only have a normally closed contact and do not supply any voltage.

↻ The cable to the external mains protection unit is available on the device.

↻ External power supply is available at the mains protection unit.

↻ Open the cover of the appliance.

1. Loosen the cable glands [W_20]
2. Guide the connection cable through the cable glands.
3. Connect the corresponding output of the external N/A protection to "INV_OFF+", observe the operating instructions of the external device.
4. Connect the corresponding output of the external N/A protection to "INV_OFF"-, -", observe the operating instructions of the external device.
5. Connect the other units together as follows:
   - Connect wire A (+) to wire A (+) and wire B (-) to wire B (-).
6. After commissioning: In the menu item Features / Functions of `External` Overvoltage protection - Configure external device.

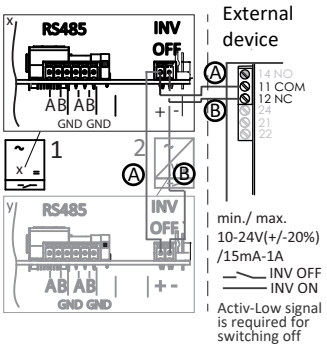

Fig. 39: Connecting the device to the external grid protection

EN-US

7.10 Sealing the connection area

↻ Grid connection is prepared.

1. Lift the housing cover onto the housing and loosely tighten the fastening screws.
2. Secure the housing cover (1) by tightening all 6 screws (2) in a diagonally opposite sequence [T_25 / 44.25 In-lbs].

⇨ The device has been mounted and installed.

⇨ Put the device into operation.

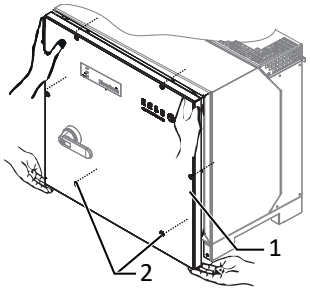

Fig. 40: Close the housing cover

EN-US

8 Start-up

8.1 Conditions

⚠ DANGER

Lethal voltages are still present in the connections and cables of the device even after the device has been switched off and disconnected!

Severe injuries or death may occur if the cables and/or terminals/busbars in the device are touched.

1. The device is only permitted to be put into operation by a specialist.
2. Unauthorized persons must not be able to access the device.

↻ The device has been mounted and electrically installed.

↻ The PV generator supplies a voltage above the configured start voltage.

1. Connect the grid voltage using the external circuit breakers.
2. Connect the PV generator using the DC isolator switch (0 > 1)

⇨ The device begins operation.

⇨ During initial start-up: Follow the instructions of the New Connection Wizard.

NOTE

A mobile terminal device with Wi-Fi interface is required in order to put the device into operation.

The following functions are only available via the WEB interface:

1. Initial start-up
2. Parameterization
3. Resetting the device to its factory defaults

NOTE

We recommend using an up-to-date Firefox or Chrome browser or the default browser that is available on the mobile terminal devices to configure the device via the web interface.

8.2 Preconditions relating to standards

Attachment of safety label in accordance with UTE C15-712-1

The code of practice UTE C15-712-1 requires that, upon connection to the French low-voltage distribution network, a safety sticker showing a warning to isolate both power sources when working on the device must be attached to each device.

☞ Attach the provided safety sticker to the outside of the device housing where it is clearly visible.

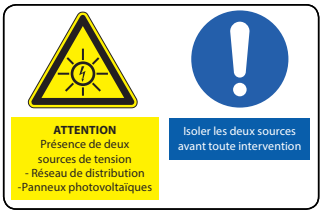

Fig. 41: Adhesive label UTE_C15-712-1

EN-US

Attach the DRM 0 safety label

According to AS/NZS 4777.2:2015, in Australia PV devices are marked that support the "Mode 0" remote control command.

1. Attach the supplied safety sticker next to the name plate on the device housing where it is clearly visible.
2. Please note the Powador-protect application note in the download area on our homepage. Here you will find the corresponding "Demand Response Modes" listed in the chapter "Referencing for power control".

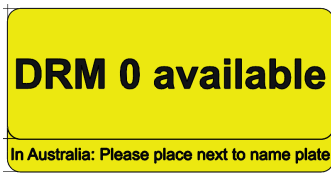

Fig. 46: Sticker DRM 0 for Australia

8.3 Network topologies

Plant segmentation

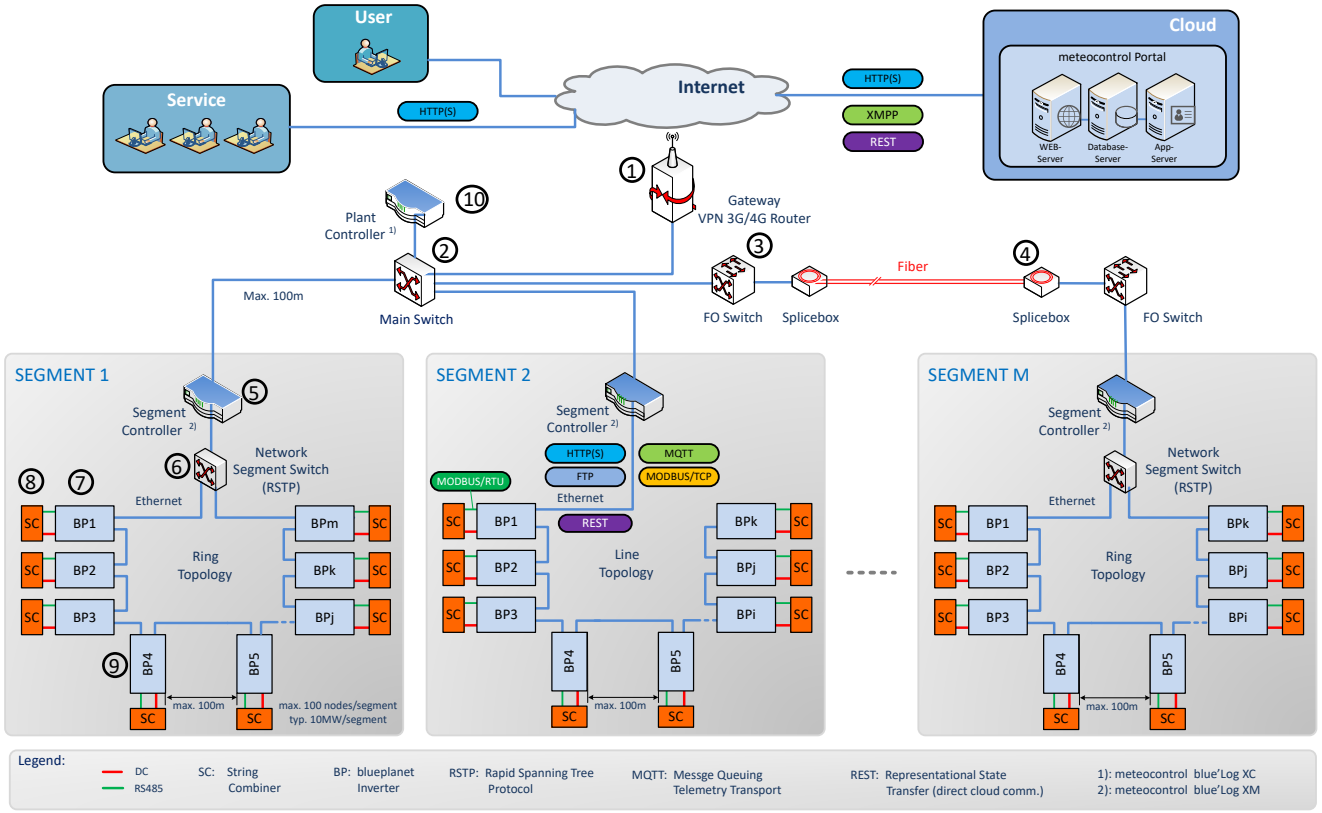

Fig. 47: Segmentation of a plant

1	Gateway VPN 3G/4G Router	6	Network Segment Switch
2	Main network switch	7	Inverter
3	FO – Switch (Fiber Optic)	8	String-Combiner
4	Slicebox (for Fiber Optic Data transfer)	9	Connection cable and protocol -DC / Modbus RTU / RS485
5	Segment Controller	10	Plant Controller

NOTE

Protection of your system against cyberattacks

The internet and communication systems, which **fall outside** the scope of KACO, must incorporate **comprehensive protection measures**, such as **VPNs**, but not limited to these, and adhere to the most current cybersecurity best practices to ensure the security of the facilities.

While a gateway to the Internet, a data logger and one instance for the higher-ranking power control are generally sufficient in smaller systems, larger systems must be divided into separate network segments because there are certain limits with regard to the number of manageable nodes for monitoring/control.

EN-US

This illustration shows a possible variant for multiple segments. Depending on the local conditions, a different positioning of the components may also be preferable (e.g. position Segment Controller at a central location and connect in the segment switch via glass fibre cable).

Located directly after the Gateway VPN-Router, is the Main network switch via which the Segment Controller is connected in. With the corresponding system size (distance from Main network switch to the Segment Controller >100m) it may also be necessary to connect in segments that are further away via a glass fibre connection.

Within a segment, it is possible to link KACO devices to one another as part of an Ethernet daisy-chain by way of an integrated switch, whereby the Segment Controller is connected at the first element in the chain. For this purposes of an example, this topology is shown in segment 2. A Segment Controller an manage up to 100 nodes. A node in this sense is any data source that is monitored by theSegment Controller überwacht wird.

(Example: 45 pairs consisting of inverter and string combiner (90 nodes) + 10 reserve nodes for other substation/segment data sources

If additional failure safety is desirable, the KACO devices can also be arranged in a ring via a correspondingly configured Network Segment Switch (that supports the Rapid Spanning Tree Protocol "RSTP"). This switch is then also coupled to the Segment Controller. This configuration is shown as an example in segments 1 and M.

As can be seen in the figure, a String combiner is assigned to each KACO device. In terms of communication, these are coupled in directly to the device via an RS485 cable (green cable – note connection port in [See section 7.9.1 Page 33]. To this end, MODBUS RTU is used as a communication protocol.

The monitoring of the string combiner is also carried out via the segment controller, whereby the KACO device undertakes the role of a MODBUS gateway. The string combiner must be coupled using a DC-Combiner. There is no restriction as the compatibility depends on the selected segment controller and string combiner. (e.g. blue'Log is compatible with Weidemüller DC-Combiner)

When using a blue'Log device, the only 3rd party String-Combiner device currently available, which can also be addressed in this manner via the segment controller , comes from "Kernel Sistemi".

Depending on the network load, the device can support up to 10 Modbus clients.

8.4 Start-up options

Option 1: Locally guided commissioning via WIFI	– Installer connects to a KACO inverter via WIFI. – Installation wizard interactively guides you through the commissioning steps.
Option 2: Local LAN connections	– Installer connects to a KACO inverter via LAN. – Installation wizard interactively guides you through the commissioning steps.
Option 3: Local commissioning with pre-assembled configuration	– Installer uses USB memory stick that already contains a prepared configuration of a device. – The device imports these settings and is then ready for operation.
Option 4: Commissioning in a network without segment controller	– Commissioning in an existing network. – Installer can carry out commissioning using the installation wizard as described in option 1. The device can be addressed via its host name.
Option 5: Central commissioning via segment controller	– An existing device configuration on the Segment Controller can be uploaded to several KACO inverters. – Once this configuration has been activated, the devices are ready for operation.

Tab. 3: Commissioning variants for individual device or system segment

8.4.1 Start-up via WIFI

To start up the device directly, the first option is to carry out the installation interactively with a WIFI-compatible adapter approved by KACO. If such an adapter is not available, the other option is to perform an automatic configuration using a USB memory stick.

EN-US

The following figure provides an example of the structure of a KACO device with string combiner (SC) and mobile devices connected without cables.

The following figure provides an example of the structure of a KACO device with wirelessly connected mobile devices.

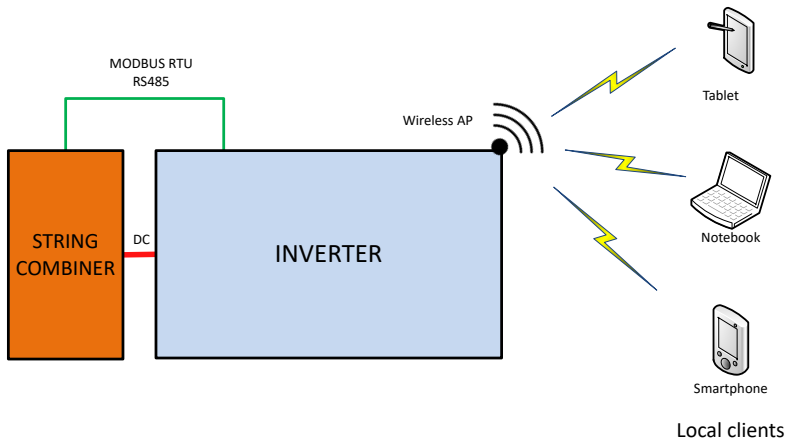

Fig. 48: Start-up via a direct WiFi connection

Application

The planned network infrastructure or AC-coupling is not yet in place or has not been completed.

A DC supply to the KACO device is sufficient for start-up.

Required components

- WiFi-compatible notebook, tablet or smartphone (Android or iOS devices can be used).
- USB WiFi stick (KACO accessory, type: WLAN adapter Digitus 150 N micro article no.: 3013222)

Establishing a connection to the KACO device via WiFi

☞ Insert the USB WIFI stick into the device and connect it to the access point created by the device using a notebook or mobile device. The WIFI SSID corresponds to the serial number of the device, which is printed on the type plate.

☞ Name of access point: <Device designation serial number> (e.g. “bp87-<serial number>” or “bp150-<serial number>”)

1. Password: kacowifi
2. Start the browser on the end device and enter server name a) or server address b):

☞ http:// 192.168.1.1

☞ Confirm entry.

⇨ The device configuration page is displayed.

1. At the Login/register icon, log in as:
2. User name: user
3. Password: kaco-user

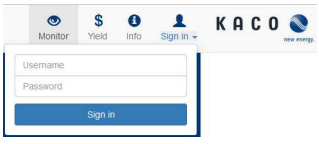

Fig. 49: Login screen

8.4.2 Commissioning via LAN connection

The following figure provides an example of the structure of a KACO device with string collector (SC) and directly connected mobile devices via Ethernet.

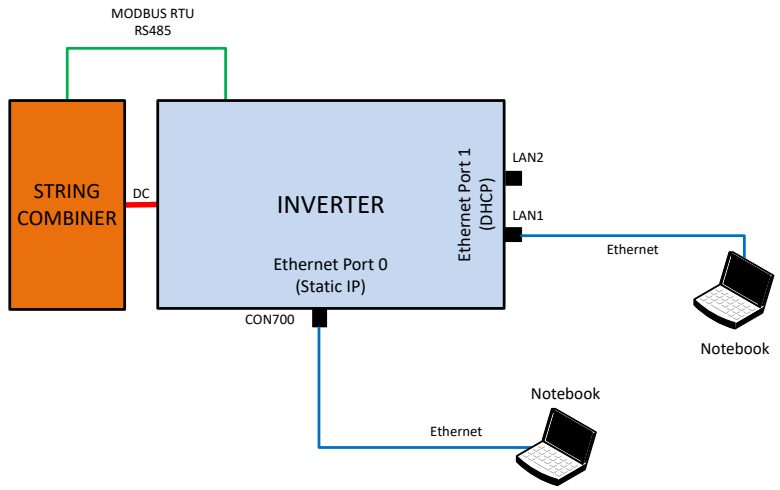

Fig. 46: Start-up via Ethernet

Application

The planned network infrastructure or AC-coupling is not yet in place or has not been completed.

A DC supply to the KACO device is sufficient for start-up.

Required components

– Notebook with Ethernet interface

– Ethernet cable (uncrossed patch cable)

Establishing a connection to the KACO device

1. The device must be opened in order to connect the Ethernet cable! For safety reasons, KACO therefore recommends establishing a connection via WiFi.
2. The device's communication circuit board has 3 Ethernet ports that can be used:

– The 2 neighboring shielded Ethernet ports are marked LAN1 and LAN2. These ports have an internal switch and, in their factory default state, they expect to receive an IP address from a DHCP server. As such, these can only be used if the connected PC makes a DHCP service available.

– The port marked CON700 that can be used to speak to the device using the static IP address 169.254.1.1. This option is preferable if you have decided to go with a wired solution.

. **NOTE: Please do not under any circumstances connect the Ethernet cable to the unshielded RJ45 slot marked J200 as this typically causes damage to the printed circuit board!**

1. Launch the browser on the terminal device and enter the IP address of the device:
2. http://<Geräte-IP-Adresse> (if ports LAN1 or LAN2 have been used)
3. http://169.254.1.1 (if the port marked CON700 has been used)

⇨ The device configuration page is displayed.

8.4.3 Start-up via a USB memory stick

Application

The installation technician has saved a pre-prepared device configuration on a USB memory stick (e.g. a configuration that he has uploaded during the guided installation of a device or one that has been given to him by a third party).

Required components

– USB memory stick with pre-prepared start-up configuration file.

Procedure

1. Connect the USB memory stick to the USB slot on the underside of the device.
   ⇨ The device checks the saved configuration and emits a flash code via the LEDs on the front of the device which allows conclusions to be drawn about the validity of the configuration ([See section 9.2 Page 48]).
2. Bei gültiger Konfiguration werden die Parameter übertragen.

EN-US

⇨ Once the parameters have been adopted and the device has been restarted, the device is put into operation.

8.4.4 Starting up a network

The following illustration provides an example of the structure of a KACO unit with a string collector (SC) and an external network connection.

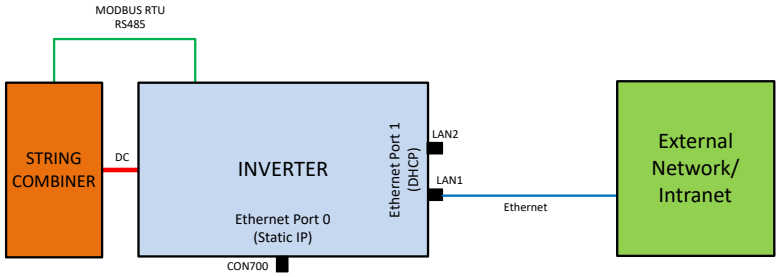

Fig. 47: Start-up via a network without Segment Controller

Application

If the device is to be integrated into an existing network, then the configuration shown in the figure should be used. It is immaterial whether port LAN1 or LAN2 is used.

Required components

– A notebook that is logged into the external network.

– Ethernet cable (uncrossed patch cable)

The device can also be operated without an external Segment Controller or data logger. In this case however, the internal logging options are limited and log data are only available for a certain period of time.

Establishing connection to the KACO device

1. The device must be opened to plug in the Ethernet cable! The device offers on the with labeled circuit board 3 Ethernet ports that can be used. For this application, only one of the 2 neighboring shielded Ethernet ports (designated LAN1 and LAN2) should be used. These ports have an internal switch and expect an IP address from a DHCP server on delivery.

   . **NOTE: Please do not under any circumstances connect the Ethernet cable to the unshielded RJ45 slot marked J200 as this typically causes damage to the printed circuit board!**

2. Use a functional Ethernet socket on the external network side.
3. Additional configuration measures may be required on the IT side in the external network so that the device is assigned an IP address.
4. Then start the browser on the end device and enter the device IP address:

   ⇨ http://<Geräte-IP-Adresse>

   ⇨ The IP address can either be requested from the network administrator or determined using an IP scanner tool.
5. There is also the option of addressing the device using its host name. In its factory default state, the host name consists of a combination of the device derivative designation and the serial number, as shown below:
   <Device designation serial number>, for example:

↻ http://bp125-125TL01234567 *or* http://bp87-87-0TL01234567 [9]

☞ If this is unsuccessful, please use the full domain name:
http://bp125-125TL01234567<ExternalNetworkDomainName> or http://bp87-87-0TL01234567<ExternalNetworkDomainName>

8.4.5 Starting up a plant segment

The following figure provides an example of the structure of a plant segment consisting of a Segment Controller and a certain number of KACO devices with string combiner (SC) combinations.

[9] If the device serial number features a "." dot, then this "." dot is replaced with a "-" dash in the host name as, according to RFC229, host names must not contain any "." dots.

For local host names, only characters in the range [a-z], [A-Z] and the minus character are permitted.

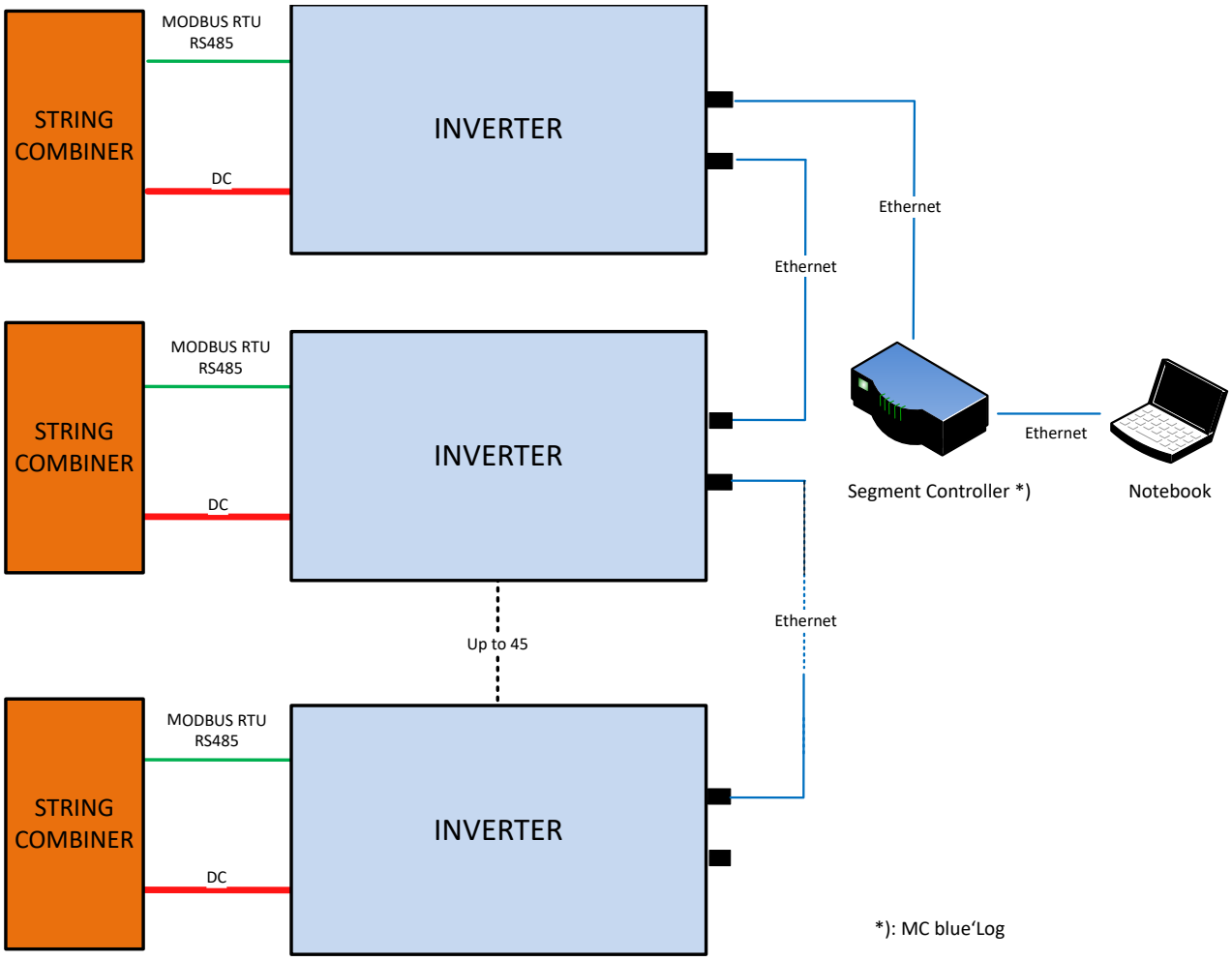

Fig. 48: Commissioning via segment controller

Application

Network infrastructure is already in place. All KACO units in the segment are accessible via a segment controller via Ethernet.

NOTE: Note that if there are several segment controllers in the system, they must not be connected to each other via the network during commissioning. [10]

After commissioning (assigning the units to the individual segment controllers), they can be connected via a `Main network switch` in the network.

Required components

- Notebook with Ethernet interface and pre-prepared start-up configuration file
- Segment Controller

Procedure

1. Connect the notebook to the Segment Controller via Ethernet (or to a switch that provides access to the Segment Controller).
2. Upload a pre-prepared device configuration (e.g. a device configuration that has been set up successfully on a single device).
3. Using the Segment Controller's WEB server, it is then possible to display and select all of the connected devices on the Segment Controller that should have this configuration.
4. Once the configuration has been uploaded to the respective devices, they will go into operation automatically following a restart.

[10] Note: Otherwise all inverters would be visible for the respective Segment Controller.

EN-US

9 Configuration and operation

9.1 Initial start-up

NOTE

The DC power supply must be guaranteed during initial start-up. [11]

The sequence of the settings required for initial start-up is preset in the configuration assistant.

After successful authorisation and selection of the main menu entry - Configuration ,The installation wizard is called up directly (if the unit is still in the delivery state and commissioning has not yet been carried out).

The installation wizard can also be called up again at a later time to make changes to the original configuration.

The installation consists of several steps, which are listed below.

Step: Language selection

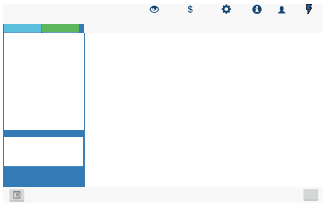

Fig. 49: Menu item: [See section 9.4.2 Page 54]

↻ The installation wizard has been started or re-started.

1. Select `Menu language` via the dropdown menu.
2. Confirm the action field.

⇨ Pressing the `Next` button will take you to the next installation step.

Step: Country configuration

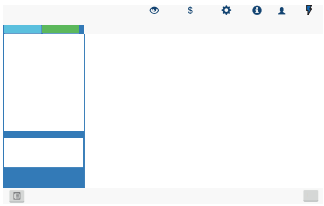

Fig. 50: Menu item: [See section 9.4.2 Page 54]

↻ A language has been selected.

1. Select `Country` and `Grid type` from the dropdown menu.
2. Confirm the action field.

⇨ Pressing the `Next` button will take you to the next installation step.

Step: Network parameters

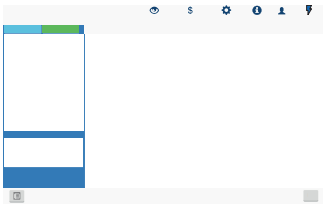

Fig. 51: Menu item: [See section 9.4.2 Page 54]

↻ The country and grid type have been selected.

. **NOTE: By default, IP addresses are assigned via the plant DHCP server.**

. **NOTE: If static IP addresses are required, you will have to assign these.**

. **CAUTION! In this case, it is no longer possible to distribute the configuration via the Segment Controller as this would then be part of the configuration and ultimately all inverters in the same segment would be assigned the same IP address.**

1. Activate `DHCP` or enter the `IP address` at the deactivated DHCP.
2. Confirm the action field.

⇨ Pressing the `Next` button will take you to the next installation step.

[11] It is only possible to configure the grid parameters with DC voltage. The further parameters can also be configured with a present AC voltage.

EN-US

Step: Power limitation

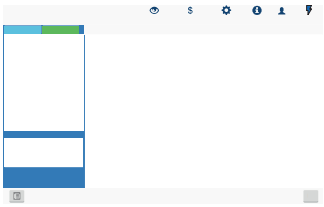

Fig. 52: Menu item: [See section 9.4.2 Page 54]

↻ The country and grid type have been selected.

. **NOTE: The permanent power limitation of the maximum active and apparent power for generation plants is agreed between the grid operator and the plant operator.**

1. Activate `power limitation` if required
2. Set `maximum apparent power` and `maximum active power`.
3. Activate `password protection` if required.
4. Confirm the action field.

⇨ The `Forward` button jumps to the next installation step.

Step: Localization

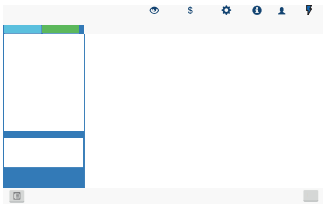

Fig. 53: Menu item: [See section 9.4.2 Page 54]

↻ The network parameters have been set up.

1. Set the `date`, `time and time zone` or arrange for synchronization with the client.
2. **NOTE: An NTP server needs to be activated for synchronization purposes** [12]
3. Select temperature unit from the dropdown menu.
4. Confirm the action field.

⇨ Pressing the `Next` button will take you to the next installation step.

Step: ModBus

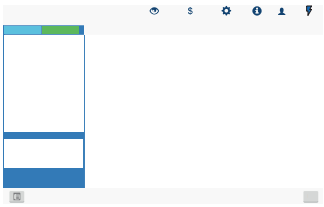

Fig. 54: Menu item: [See section 9.4.2 Page 54]

↻ Portal configuration completed.

. **NOTE: The device supports MODBUS/TCP and conventional SUNSPEC models. If there are concerns over security, write access can be deactivated.**

1. Specify the `Modbus port` and determine `Read/write access`.
2. Confirm the action field.

⇨ Pressing the `Next` button will take you to the next installation step.

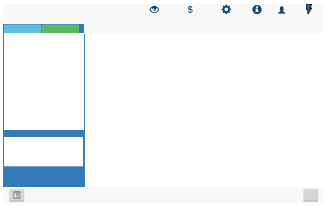

Fig. 55: Menu item: [See section 9.4.2 Page 54]

[12] It is preferable to install this on a plant component. It is also possible to select an NTP server localized on the internet provided the device has direct access to the internet.

EN-US

Step: String combiner

↻ Modbus has been specified.

1. If available, activate `string combiner monitoring`.

. **NOTE: When a blue´Log device is used, the only 3rd party string combiner device currently available, which can also be addressed in this manner via the Segment Controller, comes from “Kernel Sistemi”.**

2. Set other parameters.
3. Confirm the action field.

⇨ Pressing the `Next` button will take you to the next installation step.

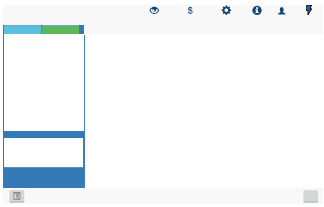

Fig. 56: Menu item: [See section 9.4.2 Page 54]

Step: Optional parameters

↻ String collector monitoring has been set up.

. **NOTE: Using the plant ID, the device followed by its firmware version can be detected automatically in the Cloud/portal and assigned to the relevant plant.**

1. Enter the device name used to reach the device in the network.

. **NOTE: The coordinates identify the device installation location.**

2. Confirm the action field.

⇨ Pressing the `Next` button will take you to the next installation step.

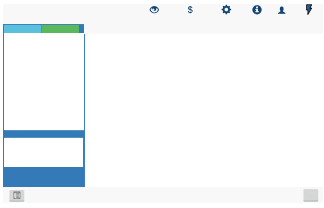

Fig. 57: Menu item: Only on the installation wizard!

Step: Finalisation

↻ Optional parameters have been set.

1. Generate installation report (includes listing of all relevant parameters for acceptance purposes)
2. Specify a name for the device installation report.
3. Confirm the action field.

NOTE: All settings can also be transferred to another unit of the same series (provided that no individual parameters are required, e.g. static IP address).

1. Optional: Export current unit settings to the client.
2. Device configuration completed successfully. Please click "Finalise" to put the device into operation.

⇨ The initial installation is now complete. Specify access for device(s).

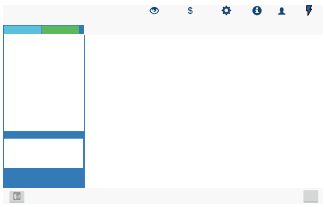

Fig. 58: Menu item: Only on the installation wizard!

9.2 Signal elements

The 3 LEDs on the device show the different operating states. The LEDs can display the following states:

 LED illuminated

 LED flashing

 LED not illuminated

Operating status	LED status	Description
		
Start		The green "`Operating`" LED is illuminated when AC and DC voltage is present. If the LED is flashing, internal communication between the components is being established. When the LED stops flashing, the device is ready to feed in.

EN-US

Operating status	LED status	Description
		If the LED continues to flash for a long time, there is an internal communication error.
Feed-in start		The green "Operating" LED is illuminated. The green "Feed-in" LED is illuminated after the country-specific waiting period*. The device feeds into the grid. You can hear the circuit-breaker / interface switch switch on. **NOTE: Both LEDs are also illuminated in Q on Demand operation mode.**
Feed-in mode with reduced power		The green “Operating” LED is lit. The green LED "Feed" is flashing because one of the modes: internal power reduction, external power reduction, external reactive power request or standalone mode is active. The device feeds into the grid. You can hear the circuit-breaker / interface switch switch on.
Non-grid feed mode		The green "Operating" LED is illuminated.
Fault		None of the LEDs is illuminated or the red "Fault" LED is illuminated. Fault in the AC/DC source Conditional special cases: – There is no DC voltage present (e.g. DC isolator switch open) – DC voltage too low (< starting voltage) DC voltage is present (> starting voltage), but communications connection between the front end (operating unit) and back end (control unit) is faulty, or interrupted.

The 3 LEDs also signal the **firmware update process** when a USB stick is inserted. The LEDs can assume other states for this purpose:

 LED flashing quickly

 LED flashing slowly

 LED flashing alternating

Operating status	LED status	Description
		
Procedure in progress		The green “Operating” LED is illuminated when the device is ready for use. **Note:** When updating via the web server and a USB stick is inserted in parallel, the unit remains inactive until the USB stick is removed or then performs a reset and restarts.
Procedure has commenced (initialization)		The green “Operating” LED and the green “Feed-in” LED are flashing **quickly yet alternately**. **Note:** The procedure will last up to 5 mins for firmware updates or up to 30 secs for parameter updates.
Process is initiated (update)		The green “Operating” LED and the green “Feed-in” LED are flashing **quickly**.
Procedure completed successfully.		The green “Operating” LED and the green “Feed-in” LED are flashing **slowly and in tandem**. **Note:** Check the new SW version via the web interface [See section 9.3 Page 50].

EN-US

Operating status	LED status	Description
Fault		The red "`Fault`" LED is **flashing slowly**. **Note:** The procedure has not been completed successfully or a time limit has elapsed. **Important:** If the USB stick is removed during the initialization phase, a device fault is triggered. Inserting the USB stick initiates a device restart.
No fault		No fault present.

9.3 User interface

NOTE

Depending on the tolerances of the measuring elements, the measured and displayed values are not always the actual values. However, the measuring elements ensure maximum solar yield. Due to these tolerances, the daily yields shown on the display/screen may deviate from the values on the grid operator's feed-in meter by up to 15%.

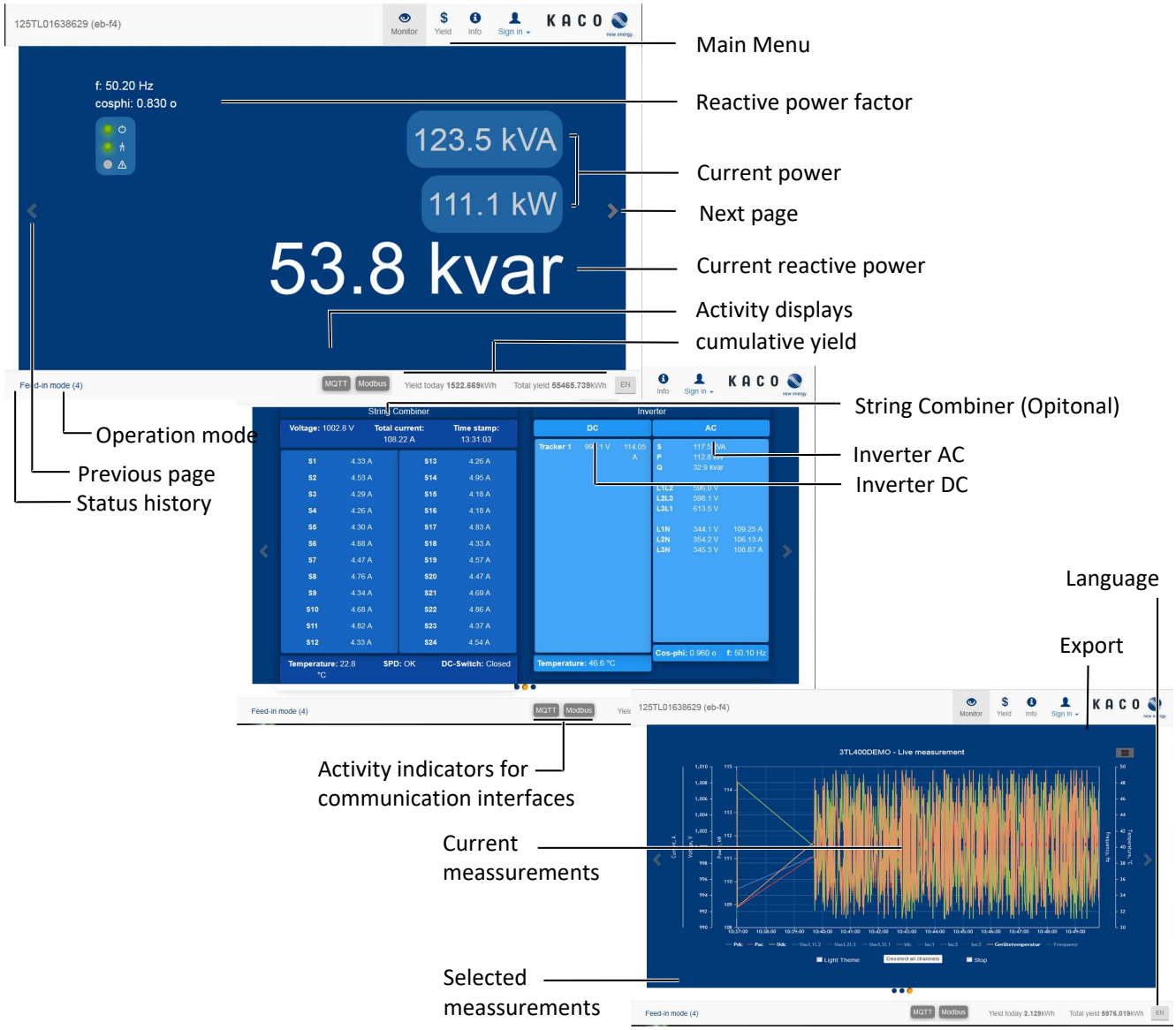

Fig. 59: Monitoring interface

EN-US

Area	Description
Basic layout - 1st tab	Displays the current reactive power factor Displays the current output
Basic layout - 2nd tab	Displays AC and DC voltages
Basic layout - 3rd tab	Current measurement values with export function

Tab. 4: Description of the areas

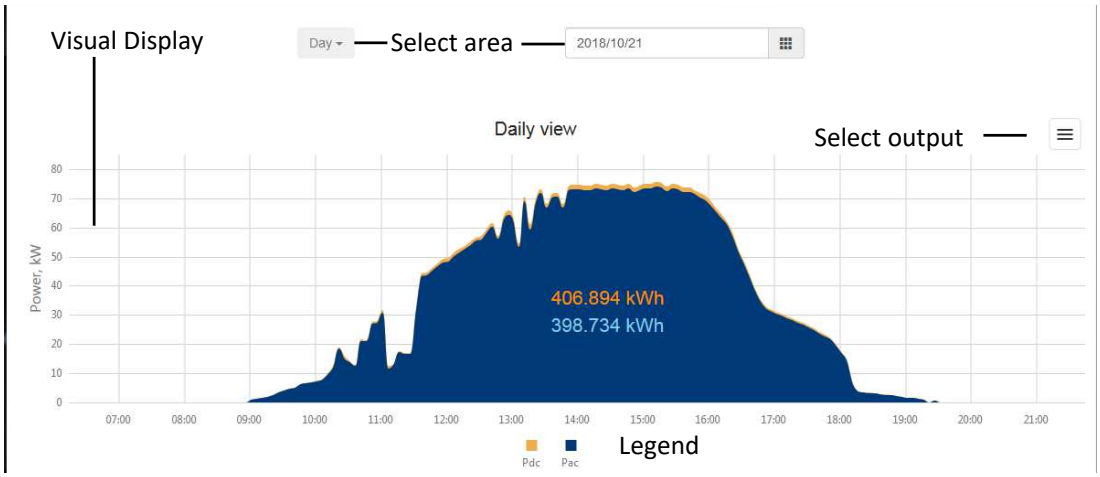

Fig. 60: Interface for evaluating the yields

Area	Description
Selection area	Filtering options for daily and annual values
Visual representation	Graphical bar chart
Legend	Meaning of color coding

Tab. 5: Description of the areas

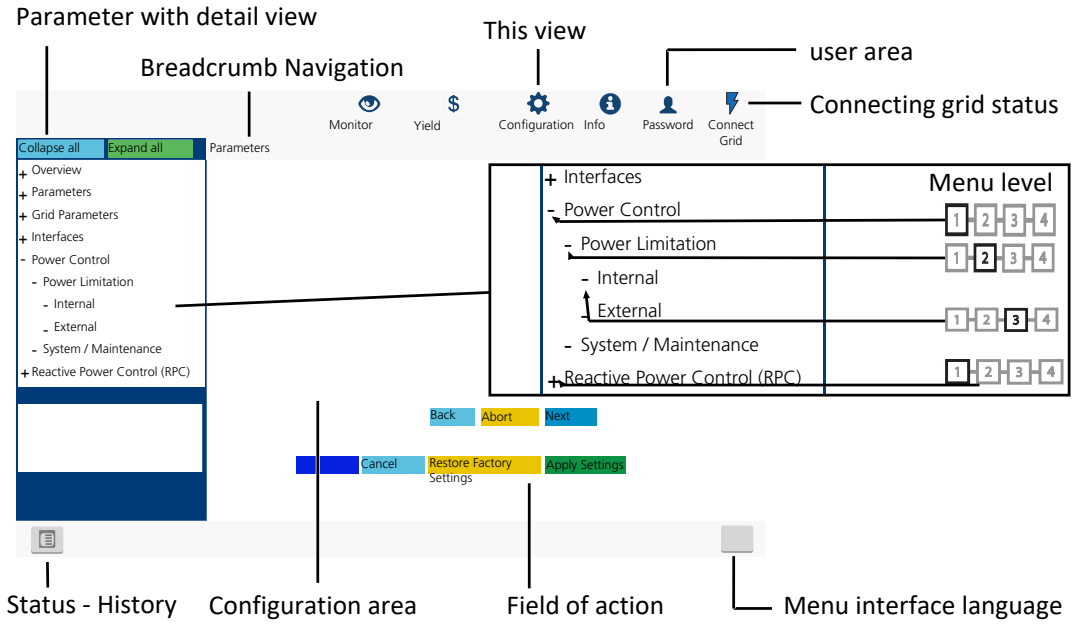

Fig. 61: Parameterization interface

Area	Description
Menu bar	Menus and commands for operating the interface.
Tool bar	

EN-US

Area	Description
Scope of application	Displays parameter values, graphs or input options relative to the view, function and parameter selected.
Navigation area	Displays the user level and error messages. Enables selection of connected interfaces. Enables selection of devices connected at the interface. Enables selection of functions in relation to the parameter selected.

Tab. 6: Description of the areas

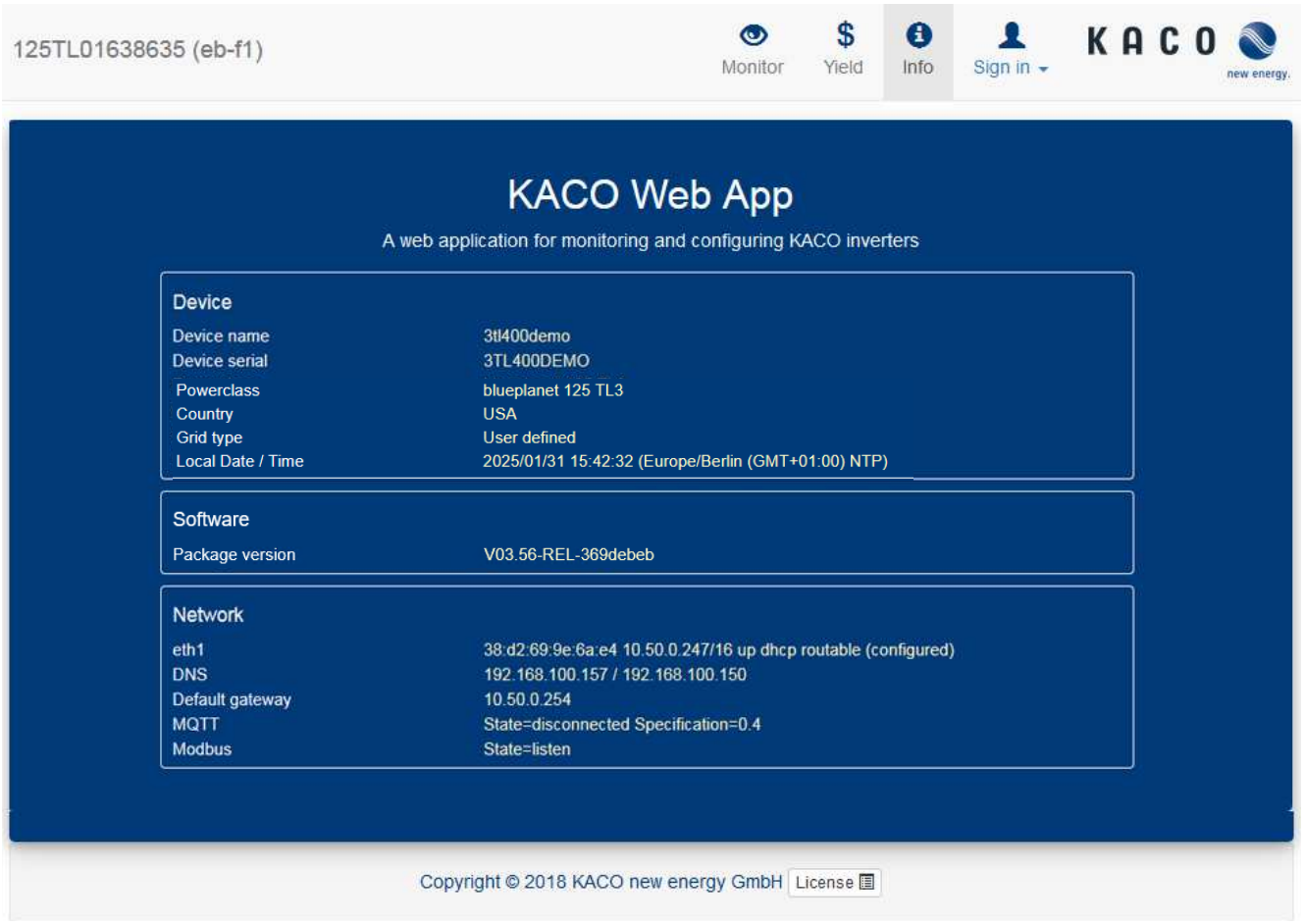

Fig. 62: >Device and hardware information interface

Bereich	Description
Device	Displays the serial number, device name, grid type, local installation location and time
Software	Displays the firmware package installed
Network	Displays the current grid parameters

Tab. 7: Description of the areas

EN-US

9.4 Menu structure

NOTE

Protection of special grid parameters [x] **by means of a password** ([x] not network parameters!)

1. As soon as the password has been activated, this also applies to external change requests (e.g. via MODBUS or other external interfaces).
2. You will be asked to enter the password if you would like to change a protected grid parameter. Once you have entered the password, protection will be disabled for all protected grid parameters (including the password protection setting) for 15 minutes. Protection is reactivated automatically after this time has elapsed.
3. If you attempt to disable a protected parameter group, you will have to enter the password first unless it was entered earlier in the session.
4. As soon as a set of configuration parameters has been exported, the password is part of this configuration.
5. If the configuration has been imported into another device, then the other device will have the same protection status. If the other device already had protection and the password for the new configuration is different, then the new configuration will be rejected.

NOTE

We recommend using an up-to-date Firefox or Chrome browser or the default browser that is available on the mobile terminal devices to configure the device via the web interface.

Symbols used

1 2 3 4	Menu level (0,1,2,3) [See section 9.3 Page 50] Submenu		Password-protected menu (password can be requested from KACO customer service)
	Display		Option box Setting range
	Option menu		Default value Interval

9.4.1 Yield via web user interface

Country-spec. Settings	Level	Display/ settings	Action in this menu/meaning
	1 2 3 4	Daily view	Displays the recorded operating data graphically. ☞ Select a day. ⇨ The web interface shows the selected data.
	1 2 3 4	Weekly view	**NOTE: Displays the recorded operating data graphically.** ☞ Select a week. ⇨ The web interface shows the selected data.
		Month display	Displays the recorded operating data graphically. ☞ Select a month. ⇨ The web interface shows the selected data.
		Yearly view	Displays the recorded operating data graphically. ☞ Select a year. ⇨ The web interface shows the selected data.

EN-US

Country-spec. Settings	Level	Display/ settings	Action in this menu/meaning
	1 2 3 4	Total view	Displays the total yield up to now.
	1 2 3 4	Export / print Print PNG | PDF | JPEG | SVG | GIF	**NOTE: Opportunity to print out or save the chart.** 1. Select an output format. 2. Specify the storage location.

9.4.2 Configuration via web user interface

Country-spec. Settings	Level	Display/ settings	Action in this menu/meaning
	1 2 3 4	Overview	Input screens for basic settings
	1 2 3 4	Language (14 languages)	1. Select the required language for the user interface. 2. Confirm the action field.
	1 2 3 4	Localization Status	1. Select the current date and enter the time or press the button „ Sync with client device now". 2. Select time zone. 3. Activate NTP server and assign name. 4. Obtain NTP server setting via DHCP. 5. Set temperature unit. 6. Confirm action field.
	1 2 3 4	Miscellaneous	1. Enter the device name. 2. Enter the degree of longitude and latitude of the installation location. 3. Enter the plant ID. 4. Confirm the action field.
	1 2 3 4	DC-Parameters	Input masks for DC source (PV generator)

EN-US

Country-spec. Settings	Level	Display/ settings	Action in this menu/meaning
	1 2 3 4	String Combiner	**NOTE: Opportunity to configure a string combiner.**
		String combiner monitoring Deactivated | By inverter and segment controller / SCADA system | By Segment Controller / SCADA System	☞ Activate monitoring function, if necessary.
		Serial number of assigned string combiner	☞ Enter the serial number once the device has been installed. **NOTE: The serial numbers of the string combiner that are not connected directly to the device are entered on the segment controller.**
		Baud rate & number of data capture units 9600 *8n1*	1. Specify the baud rate and capture interval. 2. If necessary, enter the number of the data capture unit.
		Unit address Unit channels	1. Specify the IP address of the string combiner. 2. Specify the number of monitored strings. 3. Confirm the action field.
	1 2 3 4	Constant voltage control	**NOTE: Opportunity to deactivate the MPP seek mode in order to operate the device with a constant DC voltage.** **NOTE: With activated constant voltage control and "Q on Demand" function, energetic recovery may develop on the PV generator. Please observe the module manufacturer's instructions and approval.**
		Constant voltage mode Off | On	☞ Activate or deactivate the constant voltage controller.
		Constant voltage / [See section 4 Page 15] [V] / 1 [V]	1. Set value for constant voltage control. 2. Confirm the action field.
	1 2 3 4	DC starting voltage / [See section 4 Page 15] [V] / 1 [V]	**NOTE: The device begins feed-in as soon as this DC voltage is present.** 1. Set the starting voltage. 2. Confirm the action field.
	1 2 3 4	Insulation resistance 100 – 2000 [kOhm] / 300 [kOhm] / 1[kOhm]	1. Set threshold value at which the insulation monitor reports a fault. 2. Confirm the action field.
	1 2 3 4	Grid Parameters	Input screens for grid parameters

EN-US

Country-spec. Settings	Level	Display/ settings	Action in this menu/meaning
	1 2 3-4	Country & Grid type	**NOTE: This option influences the country-specific operating settings of the device. Please consult KACO service for further information.** 1. Select country and grid type. 2. Observe the note for [See section 9.4.2 Page 75]
		Nominal grid voltage & Nominal grid frequency Password protection Status	☞ Specify optional nominal grid voltage. **NOTE: The device switches off if the grid frequency deviates from the nominal grid voltage by more than 9.5Hz.** 1. Select optional nominal grid frequency. 2. Activate optional password protection. 3. Activate optional password protection.
	1 2 3-4	FRT (Fault Ride Through)	**NOTE: The device supports dynamic grid stabilization (Fault Ride-Through).NOTICE! More detailed information at** [See section 10.3 Page 92]
		Operating mode – On | Off	☞ Select a control process. **On**: Activates dynamic grid support using dynamic reactive current. **Off**: Deactivates dynamic grid support using dynamic reactive current. Dynamic grid support remains active on account of immunity to interference.
		Setting | Manual |Predefined zero current	☞ Select a control process.
		Priority – Reactive current limitation | Active current priority	☞ Select a control process.
		Constant k positive sequence dip & Constant k positive sequence swell k 0 – 10 2 0.1	☞ Set amplification factor k for the pos. sequence for drop and increase in the grid voltage.
		Constant k negative sequence dip Constant k negative sequence swell k 0 – 10 2 0.1	☞ Set amplification factor k for the neg. sequence for drop and increase in the grid voltage.
		Dead band 2 – 120 [% Uref] 10.0 0.1	☞ Set dead band in %.
		Dynamic reactive current only Off | On	**NOTE: With FRT mode activated, the pre-fault reactive current can be added.** ☞ If necessary, activate pre-fault reactive current.
		Dead band mode Mode 1 | Mode 2	☞ Select dead band mode for the active control process.
		Reference voltage 80.0 – 110.0 [% Unom] 100 0.1	☞ Set reference voltage for the active control process.

EN-US

Country-spec. Settings	Level	Display/ settings	Action in this menu/meaning
		Minimum operating voltage activation 45.0 – 125.0 [% Unom] 0.1 & Maximum operating voltage activation 45.0 – 125.0 [% Unom] 0.1 Password protection Status	☞ Set voltage range for the active control process.
		Zero current threshold undervoltage 0 – 80 [%Unom] 0.1 Zero current threshold overvoltage 110 – 141.8 [% Unom] 0.1	☞ Set voltage threshold for zero current mode. If one or more phase/phase or phase/neutral conductor voltages move below or above the configured threshold, the inverter changes to zero current mode. The total current is regulated to virtually zero.
		Reactive current limitation 0 – 100 [% Imax] / 100 [% Imax] / 1	☞ Set the reactive power limitation.
		Minimum support time 1,000 – 15,000 [ms] / 5,000 [ms] 10	☞ Set the minimum support time.
	1 2 3 4	Islanding detection	**NOTE: Grid operators require shutdown of the device with standalone grid detection. More detailed information at:** [See section 10.5 Page 99]
		Mode Off / ROCOF / ROCOF enhanced / Frequency shift Password Protection	**NOTE: Function is active at the factory and may only be deactivated during island operation (without grid).** 1. Select mode and observe menu items. 2. Activate password protection if necessary. 3. Confirm action field.
		ROCOF operation mode passive Off | On	☞ Activate passive grid influence by application of a frequency.
		ROCOF operation mode active Off | On	☞ Activate active grid influence by application of a frequency.

EN-US

Country-spec. Settings	Level	Display/settings		Action in this menu/meaning
	1 2 3 4	ROCOF threshold stage 1 value ⚙ 0.1 – 6.0 [Hz / s] / 🕾 0.1 ROCOF threshold stage 2 value ⚙ 0.1 – 6.0 [Hz / s] / 🕾 0.1		☞ Define threshold for ROCOF.
		ROCOF threshold stage 1 time ⚙ 0.10 – 5.00 [s] / 🕾 0.1 ROCOF threshold stage 2 time ⚙ 0.10 – 5.00 [s] / 🕾 0.1		☞ Define time value for ROCOF.
	1 2 3 4	ROCOF enhanced		**NOTE: Active detection after exceeding the first threshold.**
	1 2 3 4	ROCOF threshold stage 1 value ⚙ 0.1 – 6.0 [Hz / s] / 🕾 0.1 ROCOF threshold stage 2 value ⚙ 0.1 – 6.0 [Hz / s] / 🕾 0.1		☞ Define threshold for ROCOF.
		ROCOF threshold stage 1 time ⚙ 0.10 – 5.00 [s] / 🕾 0.1 ROCOF threshold stage 2 time ⚙ 0.10 – 5.00 [s] / 🕾 0.1		☞ Define time value for ROCOF.
	1 2 3 4	ROCOF proportionality factor ⚙ -5000 – 5000 [‰ / Hz / s] / 🕾 1 Status		1. Define the proportionality factor. 2. Confirm the action field.
	1 2 3 4	Frequency shift Off | On		☞ Activate frequency shift.
	1 2 3 4	Pulse period repetition time ⚙ 40 – 6000 [ms] / 1000 [ms] / 🕾 1 [ms]		☞ Define period for detection.
	1 2 2 3 4	Ramp Rate Limitation		**NOTE: Opportunity to limit power in the case of an increasing and decreasing grid frequency.**
		Operation mode Status		☞ Select operation mode.
		Increasing gradient & Decreasing gradient ⚙ 1 – 65534 [%/min] / 65534 / 🕾 1 Password protection Status		☞ Set gradient. This percentage relates to the nominal frequency. 1. Activate optional password protection. 2. Confirm the action field.

EN-US

Country-spec. Settings	Level	Display/ settings	Action in this menu/meaning
	2	Connection Conditions	**NOTE: According to their network conditions, exact connection conditions must be set.**
	2 3 4	Min. conn. voltage after grid mon. 10 – 110 [% Unom] / 0.1 & Max. conn. voltage after grid mon. 90 – 125 [% Unom] / 0.1	☞ Specify switch-on voltage range after grid error.
	2 3 4	Min. conn. frequency after grid mon. 45 – 65 [Hz] / 0.01 & Max. conn. frequency after grid mon. 45 – 65 [Hz] / 0.01	☞ Specify switch-on frequency range after grid error.
	2 3 4	Min. conn. voltage after grid failure 10 – 110 [% Unom] / 0.1 & Max conn. voltage after grid failure 90 – 125 [% Unom] / 0.1	☞ Specify switch-on voltage range after grid error.
	2 3 4	Min. conn. frequency after grid failure 45 – 65 [Hz] / 0.01 & Max. conn. frequency after grid failure 45 – 65 [Hz] / 0.01	☞ Specify switch-on frequency range after grid error.
	2 3 4	Monitoring time grid voltage 1000 - 1800000 [ms] / 60000 / 1000 **&** Monitoring time PV voltage 1000 - 1800000 [ms] / 60000 / 1000	☞ Zeit für die Beobachtung der Netzspannung und PV-Spannung definieren.
	2 3 4	Waiting time after grid failure 1000 - 1800000 [ms] / 60000 / 1000 Password protection Status	1. Set waiting time after grid error. 2. Activate optional password protection. 3. Confirm the action field.

EN-US

Country-spec. Settings	Level	Display/ settings	Action in this menu/meaning
		Trip Settings	**NOTE: Activate switch-off according to generic parameters, frequency or voltage..**
	1 2 3 4	Generic parameters	**NOTE: Opportunity to activate standard protective shutdown**
	1 2 3 4	Trip with intentional delay Status	1. If necessary, activate delayed trip-off. 2. Activate optional password protection. 3. Confirm the action field.

EN-US

Country-spec. Settings	Level	Display/ settings	Action in this menu/meaning
	1 2 3 4	Frequency	**NOTE: Opportunity to monitor frequency trip-off**
	1 2 3 4	Trip underfrequency monitoring Status	☞ Activate if necessary.
	1 2 3 4	Number of trip underfrequency levels 1- 5 / 2 / 1	☞ Specify the number of support levels.
	1 2 3 4	Trip underfrequency level 1 45 – 65 [Hz] / 47.5 [Hz] / 0.01 Trip underfrequency time level 1 0– 1000000 [ms] / 100 / 1	**NOTE: If the grid frequency is within the deactivation range for the duration of the deactivation time, then the function is deactivated.** ☞ Define range and trip-off time.
	1 2 3 4	Trip underfrequency level 2 - 5 42.5 – 65 [Hz] / 47.5 [Hz] / 0.01 Trip underfrequency time level 2 – 5 0– 1000000 [ms] / 100 / 1	
	1 2 3 4	Trip overfrequency monitoring Status	☞ Activate if necessary.
	1 2 3 4	Number of trip overfrequency levels 1- 5/ 2 / 1	☞ Specify the number of support levels.
	1 2 3 4	Trip overfrequency level 1 45.0– 65 [Hz] / 51.5 [Hz] / 0.01 Trip overfrequency time level 1 0 – 10000000 [ms] / 100 / 1	**NOTE: If the grid frequency is within the deactivation range for the duration of the deactivation time, then the function is deactivated.** 1. Define range and trip-off time. 2. Activate optional password protection. 3. Confirm the action field.
	1 2 3 4	Trip overfrequency level 2 – 5 45,0– 67.5 [Hz] / 51.5 [Hz] / 0.01 Trip overfrequency time level 2 – 5 0 – 10000000 [ms] / 100 / 1 Password protection Status	

EN-US

Country-spec. Settings	Level	Display/ settings		Action in this menu/meaning
	3	Voltage		**NOTE: Option to monitor the voltage shutdown.**
	3 4	Trip undervoltage monitoring Status		☞ Activate if necessary.
	3 4	Number of trip undervoltage levels ⚙ 1- 5 / ◦ 2 / ◠ 1		☞ Specify the number of support levels.
	3 4	Trip undervoltage level 1 ⚙ 10 – 100 [% U_{nom}] / ◦ 80 [% U_{nom}] / ◠ 0.1 Trip undervoltage time level 1 ⚙ 0–120000 [ms] / ◠ 1		☞ Define range and trip-off time.
	3 4	Trip undervoltage level 2 – 5 ⚙ 10 – 100 [% U_{nom}] / ◦ 45 [% U_{nom}] / ◠ 0.1 Trip undervoltage time level 2 – 5 ⚙ 0–120000 [ms] / ◠ 1		
	3 4	Trip overvoltage monitoring Status		☞ Activate if necessary.
	3 4	Number of trip overvoltage levels ⚙ 1- 5 / ◦ 2 / ◠ 1		☞ Specify the number of support levels.
	3 4	Trip overvoltage level 1 ⚙ 100 – 125 [% U_{nom}] / ◦ 110.1 [% U_{nom}] / ◠ 0.1 Trip overvoltage time level 1 ⚙ 0–120000 [ms] / ◠ 1		1. Define range and trip-off time. 2. Activate optional password protection. 3. Confirm the action field.
	3 4	Trip overvoltage level 2 – 5 ⚙ 100 – 125 [% U_{nom}] ◦ 114.8 [% U_{nom}] / ◠ 0.1 Trip overvoltage time level 2 bis 5 ⚙ 0–120000 [ms] / ◠ 1		
		Password protection Status		

EN-US

Country-spec. Settings	Level	Display/ settings	Action in this menu/meaning
	1 2 3 4	10 min. mean value Overvoltage averaging / country-dependent [% Unom] / 0,1 %	☞ Set the voltage in % using the mean value formation.
	1 2 3 4	Overvoltage protection	**NOTE: Shutdown carried out within a grid cycle.**
	1 2 3 4	Transient overvoltage protection 114.8 – 139.0 [% Unom] / [See section 4 Page 15] / 0.1 % Password protection Status	1. Shutdown carried out within a grid cycle. 2. Activate optional password protection. 3. Confirm action field.
	1 2 3 4	Interfaces	Input screens for configuring the interfaces.
	1 2 3 4	Ethernet	**NOTE: Possibility to parameterise the Ethernet interface.**
	1 2 3 4	IP Settings	**NOTE: Parameterization of network access.**
		DHCP Status	☞ Activate or deactivate the DHCP. **On**: Once the DHCP server becomes available, the IP address, subnet mask, gateway and DNS server are automatically applied and the aforementioned menu items are filled in. **Off**: Apply settings manually.
		IP Address	☞ Allocate a unique IPv4 address in the network.
		Subnet Mask	☞ Assign a subnet mask.
		Default gateway	☞ Enter IPv4 address of the gateway.
		DNS server settings via DHCP Status	☞ Activate or deactivate the DNS server from the DHCP. **On**: Once the DHCP server becomes available, the IP address is automatically applied and the aforementioned menu items are filled in. **Off**: Apply settings manually.
		Primary DNS & Secondary DNS (optional)	1. Enter IPv4 address of DNS server. 2. Confirm the action field.
	1 2 3 4	Modbus	**NOTE: Option to set the Modbus port.**
		Activation Status	☞ Allow Modbus TCP read access.
		Write access Status	☞ Allow Modbus TCP write access. Enabling the write access allows system critical settings to be changed over Modbus TCP. Really enable write access? ☞ Confirm the action field.

EN-US

Country-spec. Settings	Level	Display/ settings	Action in this menu/meaning
	1 2 3 4	Port	☞ Set up network port.
	1 2 3 4	MQTT	**NOTE: The MQTT protocol is used to implement the advanced functions between the Segment Controller and the inverter (in particular, firmware updates, distribution of device configurations etc.).**
	1 2 3 4	Broker IP	1. Displays the IP address transmitted by the Segment Controller.
	1 2 3 4	Broker port	. **NOTE: The standard settings allow for successful communication with the Segment Controller.** 2. Confirm the action field.
	1 2 3 4	RS485	**NOTE: Option to parameterise the RS485 interface. The parameters of the RS485 (CON901) are (as with all KACO inverters): 9600 Baud, 8n1 and cannot currently be reconfigured via the web interface**
	1 2 3 4	RS485 address	**NOTE: The address must not be the same as that of any other device or data logger.** ☞ Assign a unique RS485 bus address to the device. Bus termination is carried out on the HMI board by means of a dip-switch. ☞ Confirm the action field.
	1 2 3 4	Power Limitation	**NOTE: The output power of the device can be set permanently to a lower value than the maximum output power by the internal power limitation. This may be necessary in order to limit the maximum power rating of the plant at the grid connection point, upon the grid operator's request.**
	1 2 3 4	Power Limitation	**NOTE: Opportunity to limit the power internally More detailed information at:** [See section 10.4.1 Page 96]
	1 2 3 4	Internal Status	☞ Specify the activation status.
	1 2 3 4	Maximum apparent power Slim 1000 -125000 / [See section 4 Page 15] [VA] / 100 [VA]	**NOTE: The max. apparent power limits the internal power of the device.** ☞ Enter the value or set the value using the slider.
	1 2 3 4	Maximum active power Plim 1,0 – 100,0 [% Slim] / 100[% Slim] / 0.1 Password protection Status	**NOTE: Max. Active power limits the internal power of the unit** ☞ Enter the value or set the value using the slider.

EN-US

Country-spec. Settings	Level	Display/ settings	Action in this menu/meaning
		External	**NOTE: The output power of the device can be set permanently to a lower value than the maximum output power by the external power limitation.**
		Power Limitation Status	☞ Specify the activation status.
		AC fallback active power 0 – 100 [%Plim] / 100 [%Plim] / 1	☞ Set fallback power. Specifies the standard power in the event of a communication failure. If no active power command is received within the configured fallback time, the device sets the power to the configured fallback power.
		Fallback time 0 – 43200 [s] / 300 [s] / 1	☞ Set the fallback time for the external power specification. **WARNING! After the set fallback time, external (RS485 or Modbus) specifications for cos-phi, Q and P are reset to the respective set fallback value (cos-phi constant, Q-con-stant or fallback power).** **NOTE: If the fallback time is set to 0s, external settings for cos-phi, Q and P are not reset (operation continues with the last received setpoint).**
		Output gradient limitation increase & Output gradient limitation decrease 1 – 65534 [% Slim / min] / 65534 [% Slim / min] / 1	1. Maximum change in the reactive power in the event of a change to over-excited mode. 2. Maximum change in the reactive power in the event of a change to under-excited mode.
		Settling time 200 – 60,000 [ms] / 1,000 [ms] 10 Password protection Status	1. Specify the settling time. 2. Activate optional password protection. 3. Confirm the action field.
		Power Rampup Power rampup gradient	**NOTE: Power ramp-up is used to ramp up the power gradually. More detailed information at** [See section 10.4.2 Page 98]
		Gradient 1 – 600 [% / min] / 10 [% / min] / 1	☞ Set increase.
		Rampup on every connect Rampup on first connect Rampup after grid failure Status	1. Activate option. 2. Activate optional password protection. 3. Confirm action field.

EN-US

Country-spec. Settings	Level	Display/ settings	Action in this menu/meaning
	1 2 3 4	Reactive Power Control (RPC)	**NOTE: Activate the reactive power process in the mode menu. More detailed information at** [See section 10.1 Page 78]
	1 3 4	Mode Cos-phi const. | Q const. | Cos-phi(P/Plim) | Q(P) | Q(U) | Password protection Status	1. Select a control process. 2. Activate optional password protection. 3. Confirm the action field.
	1 3 4	Cos-phi constant	**NOTE: Define the cos ϕ constant.**
	1 3 4	cos-phi const. 0,3 – 1 / 1 / 0,001	☞ Determine the specified power factor.
	1 3 4	Power gradient increasing & power gradient decreasing 1 – 65,534 [% Slim / min] / 65,534 / 1	1. Maximum change in the reactive power %S_{lim}/min in the event of a change to over-excited mode. 2. Maximum change in the reactive power %S_{lim}/min in the event of a change to under-excited mode.
	1 3 4	Settling time 1,000 – 120,000 [ms] / 5,000 [ms] 10 Password protection Status	1. Set the settling time in the event of an abrupt change in the reactive power target value (e.g. caused by a voltage jump). 2. Activate optional password protection. 3. Confirm the action field.
	1 3 4	Q constant	**NOTE: Define the Q constant.**
	1 3 4	Q constant 0 – 100 [% Slim] / 0 [% Slim] / 0.1	☞ Set the reactive power Q to a fixed value.
		Under-excited | over-excited	☞ Select the type of phase shift. **NOTE: Under-excited relates to inductive load, over-excited relates to capacitive load.**
	1 3 4	Output gradient limitation increase & Output gradient limitation decrease 1 – 65534 [% Slim / min] / 65534 [% Slim / min] / 1	1. Maximum change in the reactive power in the event of a change to over-excited mode. 2. Maximum change in the reactive power in the event of a change to under-excited mode.
	1 3 4	Settling time 1,000 – 120,000 [ms] / 5,000 [ms] 10 Password protection Status	1. Set the settling time in the event of an abrupt change in the reactive power target value (e.g. caused by a voltage jump). 2. Activate optional password protection. 3. Confirm the action field.
	1 3 4	Cos-phi (P/Pn)	**NOTE: Define the cos ϕ (P).**

EN-US

Country-spec. Settings	Level	Display/ settings	Action in this menu/meaning
	1 2 3 4	Lock-In voltage 10 – 126.6 [% Unom] / 80 [% Unom] / 0.1	☞ Set the voltage above which control is activated.
	1 2 3 4	Lock-Out voltage 10 – 126.6 [% Unom] / 80 [% Unom] / 0.1	☞ Set the voltage below which control is deactivated.
	1 2 3 4	Power gradient increasing & power gradient decreasing 1 – 65,534 [% Slim / min] / 65,534 / 1	1. Maximum change in the reactive power %S_{lim}/min in the event of a change to over-excited mode. 2. Maximum change in the reactive power %S_{lim}/min in the event of a change to under-excited mode.
	1 2 3 4	Settling time 1000 – 12000 [ms] / 5000 [ms] / 10	☞ Einschwingzeit bei einer sprunghaften Änderung des Blindleistungssollwertes einstellen.
	1 2 3 4	Number of nodes 2 - 10	**NOTE: The maximum number of configurable nodes depends on the selected grid type.** ☞ Specify the number of nodes.
	1 2 3 4	Node 1- Node 10 Power Curve 1 TMP 0-100% [% Slim] / 0 , 50 , 100 % [% Slim] / 1	☞ Define power factor for 1st , 10th ... interpolation point as a percentage of the maximum power. **NOTE: The power must be 0% at the first interpolation point and 100% at the last interpolation point. The power values of the interpolation points must be continuously increasing.**
		Cos-phi Curve 1 TMP 0,3 – 1 [ind/cap] / 1 / 0.001	☞ cos φ of the interpolation point.
		Overexcited | Underexcited	☞ If not equal to 1 is selected for the reactive power: Select the type of phase shift.
		Password protection Status	**NOTE: Overexcited corresponds to a capacitive load, underexcited corresponds to an inductive load.** 1. Optionally activate password protection. 2. Confirm the action field.
	1 2 3 4	Q(P) - NOT US DEVICES	**NOTE: Define Q(P). NOT US DEVICES**
	1 2 3 4	Power gradient increase& Power gradient decrease 0 – 65535 [% Slim] / 65535 [% Slim] / 1	☞ Set increasing and decreasing power gradient.
	1 2 3 4	Settling time 1000 – 12000 [ms] / 5000 [ms] / 10	☞ Einschwingzeit bei einer sprunghaften Änderung des Blindleistungssollwertes einstellen.
	1 2 3 4	Number of nodes 2 - 10	**NOTE: The maximum number of configurable nodes depends on the selected grid type.** ☞ Specify the number of nodes.

EN-US

Country-spec. Settings	Level	Display/ settings	Action in this menu/meaning
		Q(P) Active curve ⚙ 1 - 10	☞ Select active curve. **NOTE: Up to 10 characteristic curves can be configured independently and one of them can be activated for regulation each time.**
		Node 1- Node 10 Power Curve 1 TMP ⚙ 0-100% [% Slim] / ◦ 0 , 50 , 100 % [% Slim] / ◓ 1	☞ Define power factor for 1st , 10th ... interpolation point as a percentage of the maximum power. **NOTE: The power must be 0% at the first interpolation point and 100% at the last interpolation point. The power values of the interpolation points must be continuously increasing.**
		Cos-phi Curve 1 TMP ⚙ 0,3 – 1 [ind/cap] / ◦ 1 / ◓ 0.001	☞ cos φ of the interpolation point.
		☑ Overexcited | Underexcited Password protection ☑ Status	☞ If not equal to 1 is selected for the reactive power: Select the type of phase shift. **NOTE: Overexcited corresponds to a capacitive load, underexcited corresponds to an inductive load.** 1. Optionally activate password protection. 2. Confirm the action field.
	1 2 3 4	Q(U)	↳ **NOTE: Define Q(U).**
	1 2 3 4	Lock-In power ⚙ 0 – 100 [% Slim] / ◦ 100 [% Slim] / ◓ 1	☞ Set the active power as % of rated power above which control is activated.
		Lock-Out power ⚙ 0-20 [% Slim] / ◦ 5 [%Slim] / ◓ 1	☞ Set the active power as % of rated power below which control is deactivated.
		Lock-In time ⚙ 0 – 60,000 [ms] / ◦ 30,000 [ms] / ◓ 1,000 [ms] Lock-Out time ⚙ 0 – 60,000 [ms] / ◦ 30,000 [ms] / ◓ 1,000 [ms]	☞ Set the length of time that the active power must remain above the lock-in / lock-out power level before control is activated.
		Dead time ⚙ 0 -10,000 [ms] / ◦ 0 [ms] / ◓ 1	☞ Set the intentional delay for the start of the Q(U) function.
		Output gradient limitation increase & Output gradient limitation decrease ⚙ 1 – 65534 [% Slim / min] / ◦ 65534 [% Slim / min] / ◓ 1	1. Maximum change in the reactive power in the event of a change to over-excited mode. 2. Maximum change in the reactive power in the event of a change to under-excited mode.
		Settling time ⚙ 1,000 – 120,000 [ms] / ◦ 1,000 [ms] ◓ 10	☞ Set the response speed of the control.

EN-US

Country-spec. Settings	Level	Display/ settings	Action in this menu/meaning
		Minimum cos-phi Q1 - Minimum cos-phi Q4 0 – 1 / 0 / 0.001	☞ Enter the minimum cos φ factor for quadrants 1 and 4.
		Q(U) active curve 1 - 4	☞ Select the active curve. **NOTE: Up to 4 characteristic curves can be configured independently and one of them can be activated for regulation each time.**
		Priority mode Q-Priority | P-Priority	☞ Set priority for reactive power - Q or active power - P. **NOTE: When it comes to P priority, the reactive power adjustment range is limited subject to the active power that is currently available and fed in.**
		Number of nodes 2 - 10	**NOTE: The maximum number of configurable nodes depends on the selected grid type.** ☞ Specify the number of nodes.
		Node 1- Node 10 Power / Excitation / Voltage 0 – 100 [% Slim] / 43.6 [% Slim] / 0.1	☞ Set the reactive power of the node as a percentage of the maximum power.
		Over-excited | under-excited	☞ Art der Phasenverschiebung auswählen. **NOTE: Übererregt entspricht einer kapazitiven Last, untererregt entspricht einer induktiven Last.**
		0 – 125.0 [% Unom] / 90 ... 110.0 [% Unom] / 0.1 [% Unom]	☞ Enter the voltage of the node in volts.. **NOTE: The voltage values of the nodes must increase continuously. At voltages below the 1st node and voltages above the last node, the reactive power value of the 1st or last node is used each time.**
	1 2 3 4	P(f)	↳ **NOTE: Activate frequency-dependent power reduction in the P(f) menu.**
Not for IL, IT		Operation mode Off | Mode 1 | Mode 2	☞ Specify the operation mode. **NOTE: Mode 1 = Hysteresis active; Mode 2 = Hysteresis inactive**
	1 2 3 4	Power reference mode with underfrequency Actual power | Nominal power Power reference mode with overfrequency Actual power | Nominal power	1. Determine control method for underfrequency. 2. Determine control method for overfrequency.
		Dynamic gradient mode On | Off	☞ Activate dynamic gradient.

EN-US

Country-spec. Settings	Level	Display/ settings	Action in this menu/meaning
		Gradient in the event of overfrequency - feed-in 0 – 200 (%/Hz) 40 (%/Hz) Gradient in the event of underfrequency - feed-in 0 – 200 (%/Hz) 40 (%/Hz)	1. Determine the gradient for feed-in in the event of overfrequency. 2. Determine the gradient for feed-in in the event of underfrequency.
		Activation threshold at underfrequency 40 – 60 [Hz] / ⏠ 0.01 [Hz] Activation threshold at overfrequency 50 – 70 [Hz] ⏠ 0.01 [Hz]	1. Frequency thresholds for activating the power limitation with undervoltage. 2. Frequency thresholds for activating the power limitation with overvoltage.
		Gradient on falling frequency 0 – 200 [% Pref/ Hz] / 40 [% Pref/ Hz] / ⏠ 1	☞ Specify gradient in the case of a decreasing frequency as a ‰ (per thousand) / minute (if mode "1" or mode "2" is active).
Not at IL, IT		P(f) Deaktivierungszeit 0 – 6000000 [ms] / 0 [ms] / ⏠ 1000 [ms]	☞ Specify time for power reduction (if mode 1 is active).
		P(f) deactivation gradient 0 – 65,534 [% Smax / min] / 10 / ⏠ 1	☞ Specify deactivation gradient.
		P(f) intentional delay 0 – 5,000 [ms] / 0 [ms] ⏠ 1	☞ Set delay of the power limitation.
		P(f) minimum deactivation frequency 45 – 61.5 [Hz] / ⏠ 0.01 & P(f) maximum deactivation frequency 45 – 70 [Hz] / ⏠ 0.01	☞ Specify the minimum deactivation frequency in Hz. **NOTE: Only evaluated in mode 1.** The function is disabled if the frequency returns to the range between the minimum and maximum deactivation threshold and remains within this range for the duration of the deactivation time.
		Output gradient limitation increase & Output gradient limitation decrease 1 – 65534 [% Slim / min] / 65534 [% Slim / min] / ⏠ 1	☞ Specify the increasing and decreasing output gradient.

EN-US

Country-spec. Settings	Level	Display/ settings	Action in this menu/meaning
		P(f) settling time 200 – 2,000 [ms] / 200 [ms] / 1 [ms] Password protection Status	1. Set the P(f) settling time mode. 2. Activate optional password protection. 3. Confirm the action field.
	2	P(U)	**NOTE: Activate voltage-dependent power reduction via the P(U) menu.**
	3	Operation mode OFF | ON	☞ Regelverfahren aktivieren. **Off**: Deactivates dynamic grid support using dynamic reactive current. Dynamic grid support remains active on account of immunity to interference.
		Reference power Actual power | Nominal power	☞ Select the power-dependent control method.
		Evaluated voltage Maximum phase voltage | Positive sequence voltage	☞ Select the voltage to be rated. Defines which voltage in a three-phase system is to be evaluated.
		Hysteresis mode Off | On	**NOTE: Hysteresis mode affects the shutdown response of P(U).** ☞ Activate the mode.
		Deactivation gradient 0 – 65,534 [% / min] / 100 [% / min] / 1	☞ Set the gradients for the power limitation.
		Deactivation time 0 – 60000000 [ms] / 0 [ms] / 1000 [ms]	☞ Specify the time for voltage reduction.
		Output gradient limitation increase & Output gradient limitation decrease 1 – 65534 [% Slim / min] / 65534 [% Slim / min] / 1	☞ Specify the increasing and decreasing output gradient.
		Settling time 500 – 120000 [ms] / 2000 [ms] / 10 [ms]	☞ Specify the settling time.
		Active curve 1 - 5	☞ Select the active curve. **NOTE: Up to 5 characteristic curves can be configured independently and one of them can be activated for regulation each time.**

EN-US

Country-spec. Settings	Level	Display/ settings	Action in this menu/meaning
		Number of nodes 2 – 5	☞ Specify the number of nodes.
		Power 0,0 – 100,0 [% Pref] / 100 [% Pref] / 1	☞ Specify power for 1st, 5th ... Node as a percentage of the maximum power.
		Voltage 80,0 – 125,0 [%Unom] / 112 / 0.1 Password protect Status	1. Specify voltage for 1st, 5th ... node as a percentage of the maximum voltage. 2. Activate optional password protection . 3. Confirm the action field.
	1 2 3 4	Features / Functions	**NOTE: Input screens for advanced device functions**
	1 2 3 4	External grid protection disconnection	**NOTE: Option to detect the external grid protection devices**
	1 2 3 4	External grid protection Status	☞ Select the device.
		Powador-protect	**NOTE: Configures the grid shutdown via a Powador-protect connected to the „INV OFF“ input of the device.**
		Powador-protect operation mode Auto | On | Off	↻ Auto/On: A Powador-protect is operating in the photovoltaic plant and is connected to the device at the „INV OFF“ input. ☞ Set the operating mode for Powador-protect. **Auto**: The device automatically detects a Powador-protect integrated into the photovoltaic plant. **On**: The digital signal of the Powador-protect must be present at the digital input of the device for the device to start with feed-in. **Off**: The device does not check whether a Powador-protect is integrated into the PV plant.
	1 2 3 4	3rd party device	**NOTE: Configures the grid shutdown via an external device connected to the digital input of the device**
		3rd party device name	☞ Enter the name of the external device.
		3rd party device operation mode On | Off	☞ Select operating mode. **On:** The digital signal of the external device must be present on the digital input so that the device does not shut down. **Off**: The device does not check whether an external system is integrated into the PV system.
		Password protection Status	1. Option to set password protection. 2. Confirm the action field.

EN-US

Country-spec. Settings	Level	Display/ settings	Action in this menu/meaning
	2 3 4	SPD monitoring	**NOTE: Opportunity to check the overvoltage protection with appropriate status messages**
	3 4	SPD monitoring AC SPD monitoring DC Status Password protection Status	1. Activate overvoltage protection. 2. Activate optional password protection. 3. Confirm the action field.
	2 3 4	Q on Demand	**NOTE: Activate function only with explicit permission of the network operator. Additional conditions:** **- No PID solution connected to the unit.** **- Constant voltage regulator in the unit is deactivated**. See table : Configuration via web user interface [Page 55]
	3 4	Night Shutdown Check to activate	1. Q on Demand is activated by deactivating the night shutdown. 2. Transfer selection to memory. 3. Observe the information window and activate the function with the "OK" button if necessary. **NOTE: The currently specified reactive power settings are used. Power-dependent functions are not used.** **NOTE: If AC is disconnected during the night, the function is only available the next day.**
	2 3 4	Digital Inputs /Outputs	**NOTE: Opportunity to configure the fault signal relay [ERR].**
	3 4	Relay Positive logic | Negative logic inactive | active	1. Select the type of logic. 2. Select the form of activity. 3. Confirm the action field.
		String combiner logging interval 10 [sec] 1, 5, 10, 15, 30, 60 [min]	☞ Specify the time period between 2 log data recordings.
	1 2 3 4	Logging Management	**NOTE: Input screens for log and service data and default settings.**
		Settings	Specify the interval for data capture and base meters.
		User logging interval 1 | 5 | 10 | 15 [minutes] / 5	☞ Specify the time period between 2 log data recordings. **NOTE: Setting and duration until memory is overwritten: 1min – 5 days; 5min – 4,5 years; 10 min – 9 years; 15 min – 14 years.**
		Service logging interval 1 – 120 [sec] / 10 [sec] / 1	☞ Specify the time period between 2 log data recordings. **NOTE: Setting and duration until memory is overwritten: 1 sec – 9 days; 10 sec – 92,5 days; 120 sec - 1110 days**
		PCU logging interval 1 – 120 [sec] / 10 [sec] / 1	☞ Specify the time period between 2 log data recordings. **NOTE: Setting and duration until memory is overwritten: 1 sec – 9 days; 10 sec – 92,5 days; 120 sec - 1110 days**

EN-US

Country-spec. Settings	Level	Display/ settings	Action in this menu/meaning
	2	Analyze Log Data	**NOTE: All measurement data can be transferred to a USB stick by making individual and multiple selections.**
	2	User logs cosPhi | fac (Hz) | lac 1 (A) | lac2 (A) | lac3 (A) | idc (A) | Qac (var)	1. Select a date in the calendar. 2. Select measurement data from the dropdown field. 3. Update the measurement data. 4. Move the selected measurement data to the storage device or move the data selectively.
	1	Parameter Management	**NOTE: Option to reset configured values and the import and export of specific parameters.**
	2	Factory setting	1. Compare all parameters / country-specific parameters / network-specific parameters with default setting. 2. If necessary, reset the parameters by clicking on the "Restore" button.
	2	Config. export.	1. Exporting parameters for device-independent settings / Export all settings. 2. Select the parameters for export into a file or the plant manager.
	2	Import configuration	1. Select the parameter file using the "Browse" button. 2. Import the parameters by clicking on the “Upload” button.
	2	Password protection Country selection | Connection conditions | Advanced islanding detection | FRT | ... | ... |	1. Opportunity to set up password protection for individual parameters. 2. Confirm the action field.
	2	Firmware update	**NOTE: Opportunity to update the device. Parameter data are not overwritten when the firmware is updated.**
	3	Instant Update	1. Select and confirm the firmware update file with the “Browse...” button 2. Load the firmware with the “Browse” button. 3. Note: During the entire update process, the AC and DC supply of the inverter must be ensured. A loss of supply may damage the device. Continue with update?
	2	Installation Wizard	**NOTE:** The installation wizard is described in the chapter [See section 8.4 Page 41]. When the installation process is complete, the text: Installation wizard was completed appears
	2	Service	**NOTE: Opportunity to specify the service interval.**

EN-US

Country-spec. Settings	Level	Display/ settings	Action in this menu/meaning
	3	Service Log	**NOTE: Display of all logged installations. You should also add all maintenance activities manually via the "Service" and "Installer" interface.** 1. Enter additional service activities (exception: "user" interface) 2. Export service logs, if necessary.
	3	Export Service Package	**NOTE: Possibility to send an error log to KACO new energy.** ☞ Press Export button and send file to our service staff.
	3	Network Statistics	**NOTE: Display of sent and received data packets** ☞ Press Update.
	3	Remote Access	When remote access is enabled, KACO can access the device remotely and assist you. ☞ Activate on request.
	2	History	**NOTE: Displays all of the actions performed in the system and on the web interface.**
	2	Account Management	1. Enter your User name. 2. Enter your new user-defined Password. **NOTE: The following is specific to KACO: Following initial start-up, it is necessary to** Change password
	2	Restart the Device	**NOTE: Transfer safety-related parameters to a storage medium.** ☞ If necessary, re-start the device.

NOTE

With regard to the selection of country settings, KACO new energy attests:

1. that the relevant certificates are only valid if the corresponding country settings have been selected.
2. that all configured grid parameters must be configured in accordance with the requirements of the grid operators.
3. that the configuration of parameters using IEEE 1547: 2003 table 1 is possible but is only permitted if it is requested by the grid operators.

NOTE

Setting values according to pictogram refer only to the blueplanet 125TL3 device type. For your device please note the slider in the web interface.

9.5 Monitoring the device

↻ You have connected the device to the network.

1. When using a DHCP server: Activate DHCP.
2. For manual configuration (DHCP off):
3. Open the Settings/Network menu.
4. Assign a unique IP address.
5. Assign a subnet mask.
6. Assign a gateway.
7. Assign DNS server.

EN-US

8. Save your settings.

9.6 Carry out firmware update

NOTE

The DC power supply must be guaranteed during initial start-up. [13]

The sequence of the settings required for initial start-up is preset in the configuration assistant.

⚠ CAUTION

Damage to the device from incorrect power supply

The update can fail if the power supply is interrupted during the update process. Parts of the software or of the device itself can then be damaged.

1. Never disconnect the DC and AC power supply for or during a firmware update.
2. Do not remove the USB stick during a firmware update.

NOTE

The firmware update can take several minutes. The "Operating" LED flashes during the update process. The device may restart several times.

Perform Firmware Update

You can upload the current firmware to the devices directly via the web interface. Note the menu entries under „`Firmware Update`“ See table : Configuration via web user interface [Page 74]

You can find the firmware on the homepage kaco-newenergy.com under `Downloads` / `Software`.

Optionally firmware update is possible at the USB socket of the device. Observe the following procedure:

↻ Ensure that the power supply is connected.

↻ Pay attention to signal elements (LEDs) and statuses during the process.

↻ Note the description of the LED states during the process. [See section 9.2 Page 48]

1. Load the firmware from the KACO website onto a FAT32-formatted USB stick.
2. Insert the USB stick into the USB port of the device.
   ⇨ The update process starts once the firmware has been validated and the status LEDs flash to indicate this.
3. When the status LEDs "Operating" and "Feed-in" LED **flash slowly** at the same time **remove** the USB stick.
4. Once the update has been successfully completed, all 3 LEDs light up briefly and the device restarts.
5. Checking the firmware version on the Info web interface. [See section 9.3 Page 50]
6. When an error occurs, the update process must be repeated.

⇨ Update process completed successfully.

NOTE

Firmware update via Muli-function button

In the previous hardware versions, the firmware update was realized via multifunction buttons. This is no longer necessary since firmware version 3.3x and is also no longer possible in this new hardware version.

1. Previous manual versions contain this option. You can find them on our homepage in the respective device folder under Downloads/Archive.

[13] It is only possible to configure the grid parameters with DC voltage. The further parameters can also be configured with a present AC voltage.

EN-US

Access to archive folders

↻ You have officially signed up via mykaco.com already registered. If not, please catch up via our link mykacocom-kundenportal.

1. In the login screen, enter your full email address and password.
2. Now check if you have access to the archive folder shown in the graphic.

⇨ In the archive you will find all previous document versions as well as already expired certificates for your device.

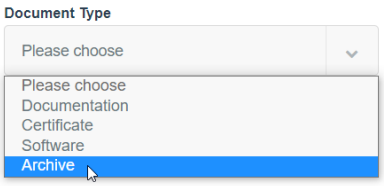

Fig. 63: Archive folder for previous documents

9.7 Access via Modbus

NOTE

In order to make use of the Modbus functionality, we recommend using the “SunSpec-Modbus-Interface” specification we have made available for the firmware version installed on your device.

Follow the description in the document “Modbus-Protokol.pdf” in order to use the two Excel files with a high level of process reliability.

↻ Firmware version of device is identical to the specifications of the Sunspec® Modbus®.

1. Enable the entry `Network – Modbus TCP - Operation mode` / `Network services – Modbus TCP – Operation mode` in the menu on the device or on the web interface.
2. If necessary, allow `write access`.
3. Set up the `Port` for access. [Default: `502`]

⇨ Access via Modbus enabled.

EN-US

10 Specifications

10.1 Reactive power control

Reactive power can be used in electrical energy supply networks to bolster the level of voltage. As such, feed-in inverters can contribute to statistical voltage stability. Reactive power brings about a voltage drop at the inductive and capacitive components of the equipment which can either bolster or reduce the level of voltage. If the generating plant draws inductive reactive power while active power is being fed in, part of the voltage swing caused by the active power feed can be compensated for by the supply of reactive power.

This reactive power mode and the respective control process are specified by the grid operator. If no control process has been specified, then the plant should be operated using a reactive power specification of 0%.

10.1.1 Operating power range depending on grid voltage

The device can be operated within the respective fixed voltage range provided. The maximum apparent power is stated in the following table. In the event of undervoltage determined by the maximum continuous current subject to the grid voltage.

The following figures show the reactive power operating range subject to active power and the apparent power operating range subject to the grid voltage for various devices.

Maximum apparent power [p.u.]	**bp 87.0 TL3** Voltage U_N: 380V	**bp 92.0 TL3** Voltage U_N: 400V	**bp 105 TL3** Voltage U_N: 400V	**bp 125 TL3** Voltage U_N: 600V	**bp 137 TL3** Voltage U_N: 600V	**bp 150 TL3** Voltage U_N: 660V	**bp 155 TL3** Voltage U_N: 590V	**bp 165 TL3** Voltage U_N: 630V	**bp 110 TL3 US** Voltage U_N: 270V / 480V	**bp 125 TL3 US** Voltage U_N: 480V
1,10	-	-	-	≥ 600	-	-	-	-	-	-
1,00	≥ 380	≥ 400	≥ 380	545	≥ 600	≥ 660	≥ 590	≥ 630	≥ 480	≥ 475
0,95	361	380	361	520	570	627	560	599	456	450
0,90	342	360	342	492	540	590	530	567	432	430
0,85	323	340	323	464	510	561	502	536	408	404

Tab. 8: Maximum continuous apparent power depending on grid voltage

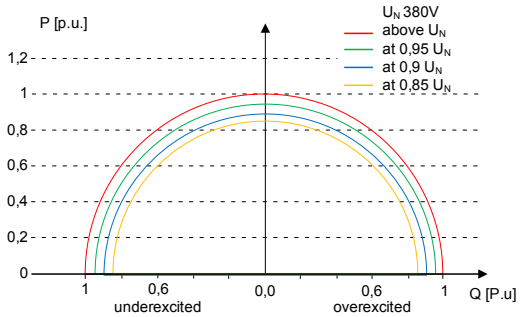

Fig. 64: P-Q operating range for bp 87.0 TL3 (Q_{max}=S_{max})

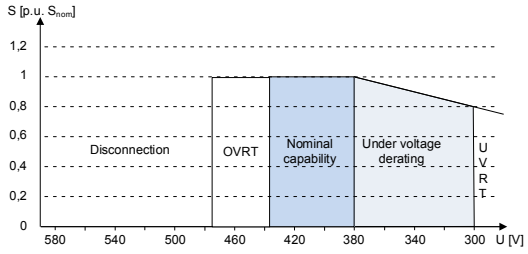

Fig. 65: Apparent power subject to the grid voltage for bp 87.0 TL3

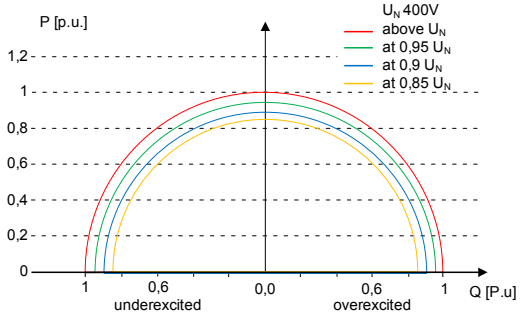

Fig. 66: P-Q operating range for bp 92.0 TL3 (Q_{max}=S_{max})

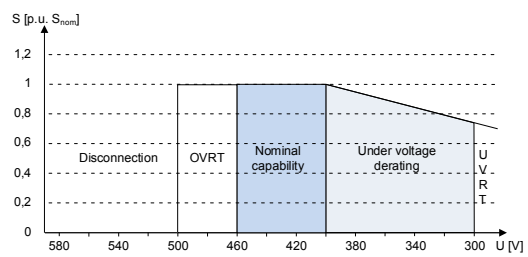

Fig. 67: Apparent power subject to the grid voltage for bp 92.0 TL3

EN-US

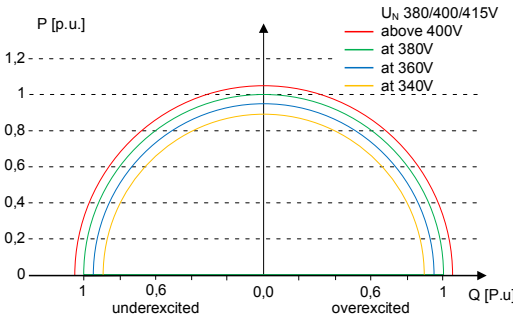

Fig. 68: P-Q operating range for bp 105 TL3 (Q_{max}=S_{max})

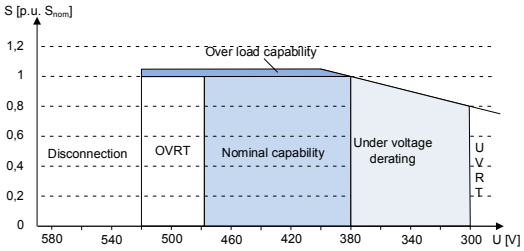

Fig. 69: Apparent power subject to the grid voltage for bp 105 TL3

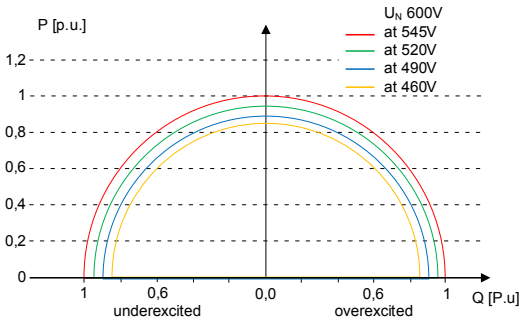

Fig. 70: P-Q operating range for bp 125 TL3 (Q_{max}=S_{max})

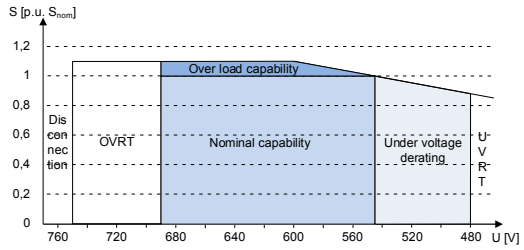

Fig. 71: Apparent power subject to the grid voltage for bp 125 TL3

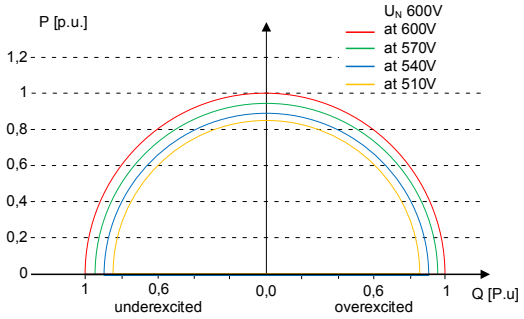

Fig. 72: P-Q operating range for bp 137 TL3 (Q_{max}=S_{max})

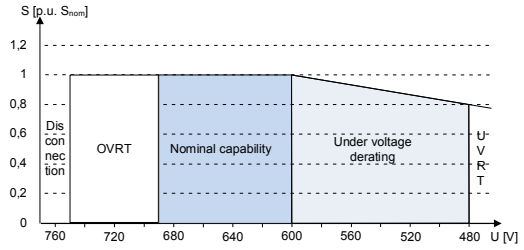

Fig. 73: Apparent power subject to the grid voltage for bp 137 TL3

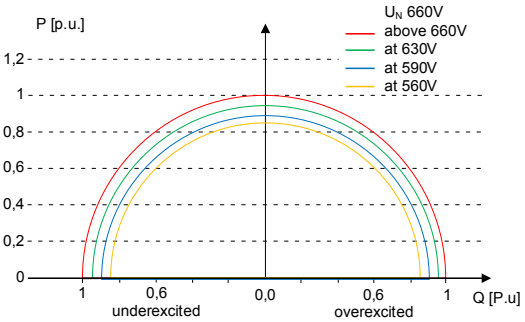

Fig. 74: P-Q operating range for bp 150 TL3 (Q_{max}=S_{max})

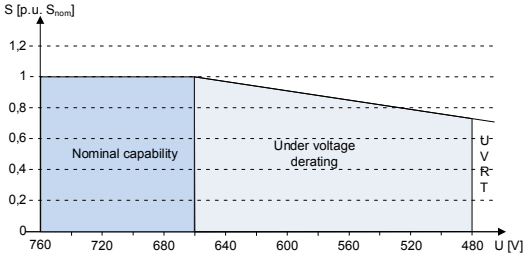

Fig. 75: Apparent power subject to the grid voltage for bp 150 TL3

EN-US

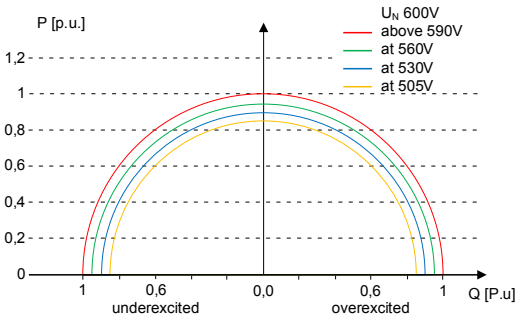

Fig. 76: P-Q Betriebsbereich für bp 155 TL3 (Q_{max}=S_{max})

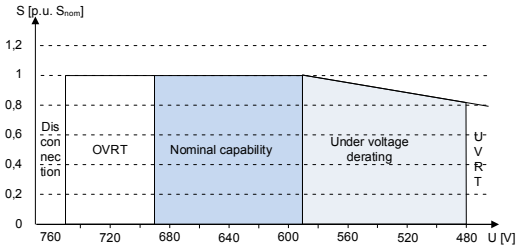

Fig. 77: Apparent power subject to the grid voltage for bp 155 TL3

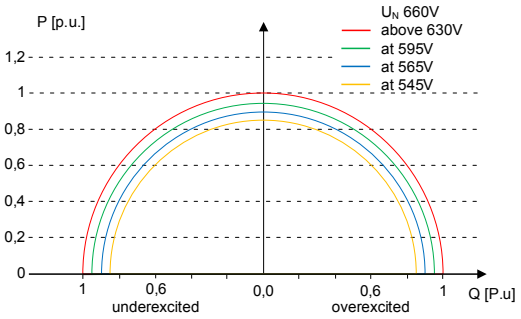

Fig. 78: P-Q operating range for bp 165 TL3 (Q_{max}=S_{max})

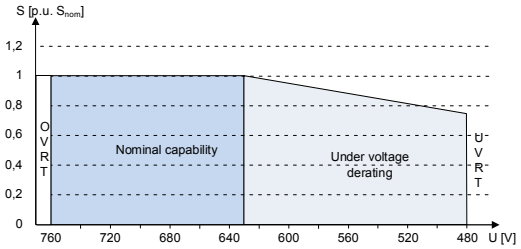

Fig. 79: Apparent power subject to the grid voltage for bp 165 TL3

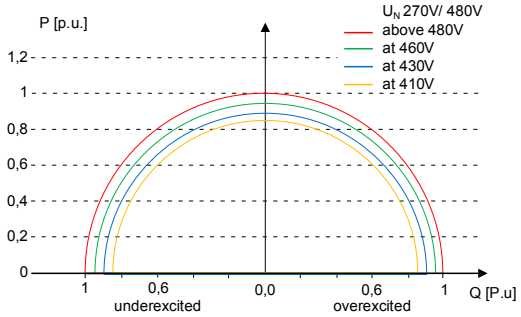

Fig. 80: P-Q operating range for bp 110 TL3 US (Q_{max}=S_{max})

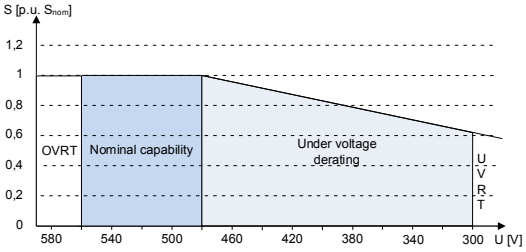

Fig. 81: Apparent power subject to the grid voltage for bp 110 TL3 US

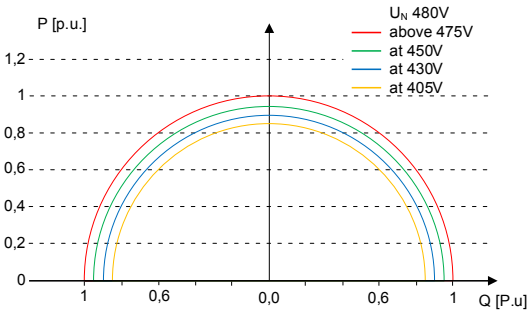

Fig. 82: P-Q operating range for bp 125 TL3 US (Q_{max}=S_{max})

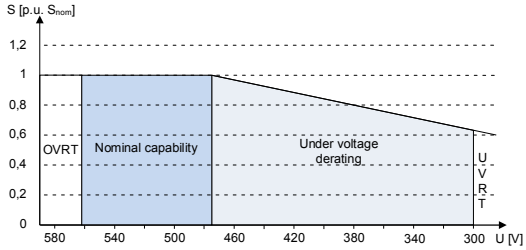

Fig. 83: Apparent power subject to the grid voltage for bp 125 TL3 US

10.1.2 Dynamics and accuracy

In all control methods the specified target value at the inverter's connection terminals is adjusted using a stationary deviation of the reactive power of maximum 2% S_N. This maximum deviation always relates to the specified value as reactive power.

If the power factor cos φ is specified in the control method, then the deviation relates to the reactive power value brought about by the current power level.

EN-US

The transient response of the control methods is determined by a PT-1 filter. In this case, the settling time corresponds to 5 Tau, or in other words, achieving approx. 99% of the final value for a PT-1 filter. Subject to the control method selected, there are also other parameters that determine dynamic behavior.

10.1.3 Reactive power functions

The following functions for controlling the reactive power are implemented in the devices listed above:

- cos φ constant
- Q constant
- cos φ (P)
- Q(P) 10 nodes
- Q(U) 10 samples

NOTE: In the basic setting, reactive power is prioritized in each method, which can be deactivated accordingly. The priority can be selected when using the Q constant and the Q(U) mode. The maximum possible active power that can be fed in is reduced in line with the P-Q operating range when the maximum effective power is reached.

Model	Parameter	Scaling factor	R/RW	Range	Description
126.	ModEna	ModEna	RW	0 / 1	The reactive power method that is selected in the device can only be indirectly activated/deactivated via Sunspec.

cos φ constant

In cos ϕ constant mode, the specified power factor is permanently set by the inverter. In doing so, the reactive power level is set in line with Q=P*tan φ as a function of the power that continuously generates the specified power factor. If the setting value is changed, the new value is adopted by way of a filter in a muted manner. The settling time is parameterizable and is 1s (this corresponds to 5 Tau (according to SunSpec, 3 Tau is ideal) with the transient response of a first-order filter (PT-1) with a time constant of Tau=200ms. The specified power factor can be configured on the display or by way of communication via the KACO RS485 protocol and MODBUS/SunSpec.

If the applicable grid code stipulates that the cos-φ should react to the target value slower than the configured Tau=200 ms by way of a defined gradient or settling time, this gradient or settling time must be implemented in the system control.

Model	Parameter	Scaling factor	R/RW	Range	Description
123.	OutPFSet cos-phi const.	OutPFSet_SF	RW	1-0,3 [°]	Set the power factor to a certain %value.
123.	OutPFSet_RmpTms Power gradient increasing & power gradient decreasing		R	1 – 65524 [% Slim / min]	Specifies the dynamic behaviour when changing the power factor cos φ. The power factor is changed with the set gradient. **Note**: The gradient is overlaid with the settling time.
123. Not implemented!	OutPFSet_WinTms Settling time	VArPCt_SF	RW	1000 – 120000 [ms]	Set the settling time in case of a sudden change of the reactive power setpoint (e.g. due to a voltage jump).
123.	OutPFSet_RvrtTms Timeout		RW	0 – 1000 [s]	Sets the time after which the inverter, if it does not receive a new power factor specification, falls back to the previously valid reactive power procedure.

EN-US

Model	Parameter	Scaling factor	R/RW	Range	Description
					If the Timeout is set to 0 econds, the trans-mitted power factor specification is permanently retained, even in the event of a communication failure. Note: when the unit is restarted, the Timeout is reset to the set fallback time.

Q constant

In Q-constant mode, the specified reactive power value is permanently set by the inverter. If the constant is changed, the new value is adopted by way of a filter in a muted manner. The settling time and gradient limitation can be configured on the web user interface. The settling time is 1s with the transient response of a first-order filter (PT-1) with a time constant of Tau=200ms. The specified reactive power can be configured on the display or by way of communication via the KACO RS485 protocol and MODBUS/SunSpec.

If the applicable grid code stipulates that the reactive power should react to the target value slower than the configured Tau=200 ms by way of a defined gradient or settling time, this gradient or settling time must be implemented in the system control.

Model	Parameter	Scaling factor	R/RW	Range	Description
123.	VArWMaxPct Q constant	VArPCt_SF	RW	0-100 [$\%_{Pmax}$]	Setpoint of the reactive power can be adjusted depending on the set maximum active power.
123.	VArPct_RvrtTms Timeout		RW	0 – 1000 [s]	Sets the time after which the inverter, if it does not receive a new reactive power specification, falls back to the previously valid reactive power procedure. If the timeout Timeout is set to 0 seconds, the transmitted reactive power specification is permanently retained, even in the event of a communication failure. Note: When the unit is restarted, the Timeout is reset to the default value.
123.	VArPct_RmpTms Increasing output gradient & Decreasing output gradient		R	1 – 65524 [% Slim / min]	Determines the dynamic behavior in the event of a change in the reactive power value. The reactive power is changed with the specified gradient. **Note:** The gradient is overlaid with the settling time.
123.	VArPct_RmpTms Settling time		RW	1000 – 120000 [ms]	Determines the dynamic behavior in the event of a change in the active power set value. The active power is changed according to a PT-1 characteristic curve with a settling time of 5 Tau. **NOTE: The settling time is overlaid with the increasing and decreasing gradient.**

cos φ(P)

In the cos φ (Pn) operating mode, the setpoint value of cos φ and the setpoint for the reactive power derived from it are continuously calculated depending on the actual power level. This function ensures that grid support is provided by the reactive power when a significant voltage boost is anticipated due to a high feed level. In this case, a characteristic curve

is specified which can be used to configure up to 10 nodes, value pairs for active power and cos φ. The active power is entered as a % in relation to the set maximum apparent power Slim. Other parameters allow you to limit functionality and to limit activation to certain voltage ranges.

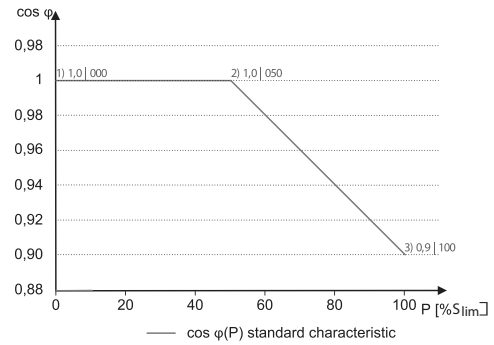

Fig. 84: cos φ (P) standard characteristic curve with 3 nodes

Q(U) 10 nodes

When it comes to mode Q(U), the nominal value of the reactive power is continuously calculated depending on the grid voltage. This function ensures that grid support is provided by the reactive power as soon as the voltage actually deviates from the target voltage. In this case, a characteristic curve is specified which can be used to configure up to 10 nodes, consisting of value pairs for voltage and reactive power. Other parameters allow you to limit functionality and to limit activation to certain voltage ranges as well as parametrise the transient response.

The zero sequence voltage is used to calculate the reactive power target for three-phase units.

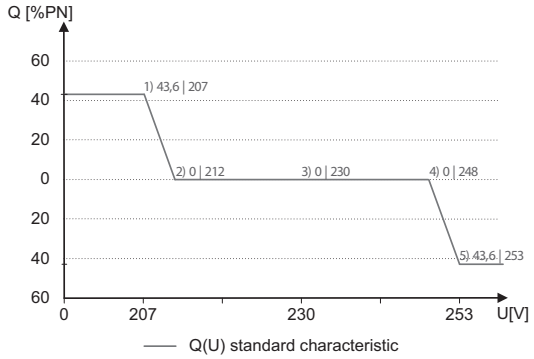

Fig. 85: Q(U) standard characteristic curve with 5 nodes

Q(P) 10 nodes

When it comes to Q(P) mode, the nominal value of the reactive power is continuously calculated depending on the active power. In this mode, a characteristic curve is specified which can be used to configure up to 10 nodes, consisting of value pairs for power and reactive power. The function allows the parameterization of the transient response.

The zero sequence power is used to calculate the reactive power target for three-phase units.

10.1.4 Parameters for reactive power control

Country-spec. Settings	Menu level	Display/ Setting	Action in this menu/meaning
		Mode Cos-phi constant | Q constant | Cos-phi(P/ Plim) | Q(U) | Q(P)	Select the active method for Reactive Power Control (RPC) and define the parameters in the respective method.
		Cos-phi constant	

EN-US

Country-spec. Settings	Menu level	Display/ Setting	Action in this menu/meaning
		Cos-phi constant 0,3 – 1 / 1 / 0,001	Specified power factor.
		Over-excited | under-excited	Reactive power mode Under-excited relates to inductive load, over-excited relates to capacitive load.
		Power gradient increasing & power gradient decreasing 1 – 65,534 [% S_{lim}/min] / 65,534 [% S_{lim}/min] / 1	Maximum change in the reactive power %S_{lim}/min in the event of a change to over-excited mode **NOTE: The gradient is overlaid with the settling time.**
		Settling time 1,000 – 120,000 [ms] / 1,000 [ms] 10	Determines the dynamic behaviour in the event of a change in the cos φ set value. With a reative power change, the cos φ is changed according to a PT-1 characteristic curve with a settling time of 5 Tau.
		Q constant	
		Q constant 0 – 100 [% Slim] / 0[% Slim] / 0.1	Set as a percentage of the maximum reactive power.
		Under-excited | over-excited	Reactive power mode Under-excited relates to inductive load, over-excited relates to capacitive load.
		Output gradient increase & Output gradient decrease increasing | decreasing	In addition to configuring the dynamic behavior using the transient time corresponding to a first-order filter, the reactive power setting can be determined by a maximum gradient - this means the maximum change in the reactive power per time period.
		1 – 65,534 [% S_{lim}/min] / 65,534 [% S_{lim}/min] / 1	Maximum change in the reactive power %S_{lim}/min in the event of a change to over-excited mode **NOTE: The gradient is overlaid with the settling time.**
		Settling time 1,000 – 120,000 [ms] / 1,000 [ms] 10	Determines the dynamic behaviour in the event of a change in the Q target value. With a change of the reactive power or the lock-in and lock out voltage, the Q is changed according to a PT-1 characteristic curve with a settling time of 5 Tau.
		Cos-phi(P)	
		Lock-in voltage 10 – 126.6 [% Unom] / 80 [% Unom] / 1 [0.1]	The control is activated above this voltage.
		Lock-out voltage 10 – 126.6 [% Unom] / 80 [%Unom] / 0.1	The control is deactivated below this voltage.
		Power gradient increasing & power gradient decreasing 1 – 65,534 [% S_{lim}/min] / 65,534 [% S_{lim}/min] / 1	Maximum change in the reactive power %S_{lim}/min in the event of a change to over-excited mode **NOTE: The gradient is overlaid with the settling time.**

EN-US

Country-spec. Settings	Menu level	Display/ Setting	Action in this menu/meaning
		Settling time 1,000 – 120,000 [ms] / 5,000 [ms] 10	Determines the dynamic behaviour in the event of a change in the cos φ set value. With a change of the active power or the lock-in and lock out voltage, the cos φ is changed according to a PT-1 characteristic curve with a settling time of 5 Tau.
		Number of nodes 2 – 10	Specify the number of nodes for the cos φ/(p/pn) characteristic curve
		1. Stützstelle … 10. Stützstelle 0V - Max. voltage in continuous operation	Power of the node as a percentage of the maximum power. For the 1st node, the power must be 0%; for the last node, the power must be 100%. The power values of the nodes must increase continuously. Note: Storage inverters only for feed-in operation
		1 – 0,3 / 1 / 0.001	Reactive power of the node as a percentage of the maximum power
		Over-excited | under-excited	Reactive power mode Under-excited relates to inductive load, over-excited relates to capacitive load.
		Q(U) 10 nodes	
		Power gradient increasing & power gradient decreasing 1 – 65,534 [% S_{lim}/min] / 65,534 [% S_{lim}/min] / 1	Maximum change in the reactive power %S_{lim}/min in the event of a change to over-excited mode **NOTE: The gradient is overlaid with the settling time.**
		Settling time 1,000 – 120,000 [ms] / 1,000 [ms] 10	Determines the dynamic behaviour in the event of a change in the Q target value. With a change of the reactive power or the lock-in and lock out voltage, the Q is changed according to a PT-1 characteristic curve with a settling time of 5 Tau.
		Number of nodes 2 – 10	Specify the number of nodes for the Q(U) characteristic curve.
		1. Stützstelle … 10. Stützstelle 0V - Max. voltage in continuous operation	Power of the node as a percentage of the maximum power. For the 1st node, the power must be 0%; for the last node, the power must be 100%. The power values of the nodes must increase continuously. Note: Storage inverters only for feed-in operation
		1 – 0,3 / 1 / 0.001	Reactive power of the node as a percentage of the maximum power
		Over-excited | under-excited	Reactive power mode Under-excited relates to inductive load, over-excited relates to capacitive load.
		Q(U) 10 nodes	
		Lock-in power 0 – 100 [% S_{lim}] / 20 [% S_{lim}] / 1	Power threshold, function is activated if limit value is exceeded.
		Lock-out power 0 – 100 [% S_n] / 5 [% S_n] / 1	Power threshold, function is activated if limit value is undershot.
		Lock-In time 0 – 60,000 [ms] / 30,000 [ms] / 1,000 [ms]	Length of time that the active power must remain below the lock-in power level before control is deactivated.

EN-US

Country-spec. Settings	Menu level	Display/ Setting	Action in this menu/meaning
		Lock-Out time 0 – 60,000 [ms] / 30,000 [ms] / ⏠ 1,000 [ms]	Length of time that the active power must remain below the lock-out power level before control is deactivated.
		Downtime 0 -10,000 [ms] / 0 [ms] / ⏠ 1	If the voltage switches from a characteristic curve section with Q=0 to a characteristic curve section with Q≠0 under active control, then the reactive power setting process is delayed by the set dead time. Once the dead time has expired, the control circuit is no longer subject to a delay and the set transient time determines the transient behaviour.
		Output gradient increase & Output gradient decrease increasing | decreasing 1 – 65,534 [% S_{lim}/min] / 65,534 [% S_{lim}/min] / ⏠ 1	In addition to configuring the dynamic behavior using the transient time corresponding to a first-order filter, the reactive power setting can be determined by a maximum gradient - this means the maximum change in the reactive power per time period. Maximum change in the reactive power %S_{lim}/min in the event of a change to over-excited mode **NOTE: The gradient is overlaid with the settling time.**
		Settling time 1,000 – 120,000 [ms] / 2,000 [ms] ⏠ 10	Settling time in the event of an abrupt change in the reactive power target value (e.g. caused by a voltage jump). The transient behavior corresponds to a first-order filter (PT-1) with settling time = 5 Tau. **NOTE: The settling time is overlaid with the increasing and decreasing gradient.**
		Min. cos-phi Q1 - Min. cos-phi Q4 0 – 1 / 0 / ⏠ 0,001	In the event of a significant voltage deviation, the maximum reactive power adjustment range can be limited by a minimum cos φ in order to prevent an excessive reactive power supply and, as a result, a significant reduction in the maximum active power that can be fed in.
		Q1	Minimum cos φ in over-excited operating mode (in-feed).
		Q4	Minimum cos φ in under-excited operating mode (in-feed).
		Q2	Minimum cos φ in over-excited operating mode (charge).
		Q3	Minimum cos φ in over-excited operating mode (charge).
		Priority mode Q priority | P priority	P priority can be selected as an alternative to the standard setting Q priority. When it comes to P priority, the reactive power adjustment range is limited subject to the limited apparent power of the inverter and the active power that is currently available and fed in.
		Active curve 1 – 4 / curve 1 TMP / curve 2 / curve 3 / curve 4	Up to four characteristic curves can be configured independently and one of them can be activated for regulation each time.
		Number of nodes 2 – 10	Specify the number of nodes for the Q(U) characteristic curve.
		1. Stützstelle … 10. Stützstelle **Power** | Voltage | Excitation 0 – 100 [% S_{lim}] / 43.6 [% S_{lim}] / ⏠ 0.1	Power of the node as a percentage of the maximum power. For the 1st node, the power must be 0%; for the last node, the power must be 100%. The power values of the nodes must increase continuously.

EN-US

Country-spec. Set-tings	Menu level	Display/ Setting	Action in this menu/meaning
		Power | **Voltage** | Excitation 0 – 125 [% S_{lim}] / 43.6 [% U_{nom}] / 0.1	Voltage of the node in volts. The voltage values of the nodes must increase continuously. At voltages below the 1st node and voltages above the last node, the reactive power value of the 1st or last node is used each time.
		Over-excited | under-excited	Reactive power mode Under-excited relates to inductive load, over-excited relates to capacitive load.

10.2 Regulating active power

Dynamics / accuracy

In all of the control methods described below the specified target value at the inverter's connection terminals is adjusted using a stationary deviation of the reactive power of maximum 2%$_N$ SN.

The transient response of the control methods is determined by a PT-1 filter. In this case, the settling time corresponds to 5 Tau, or in other words, achieving approx. 99% of the final value for a PT-1 filter. Subject to the control method selected, there are also other parameters that determine dynamic behaviour.

Methods for active power regulation

Methods for regulating the active power of feed-in inverters may be necessary for local management of load flows, for voltage stability in the distribution network and for ensuring the stability of the interconnected grid.

The device makes use of the following functions in order to regulate the active power. These are described in the following section:

- P target value (MPPT(communication)) [See section 10.2.1 Page 87]
- P limit (communication) [See section 10.2.2 Page 87]
- P(U) (characteristic curve) [See section 10.2.3 Page 88]
- P(f) (characteristic curve) [See section 10.2.4 Page 90]

10.2.1 P target value

The function "P target value" is integrated into the MPP tracking of the inverter on all PV inverters. The P target value is continuously re-calculated on the basis of the MPP tracking algorithm.

10.2.2 P limit

The function "P limit" is available for limiting the maximum feed-in power. If necessary, this can be used to reduce the maximum possible feed of an inverter, e.g. for managing bottlenecks for the operator of the distribution grid.

P limit is only available via the MODBUS/SunSpec inverter model 123 `Immediate Inverter Controls` and via RS485 communication. You can find detailed information on the communication protocol at www.kaco-newenergy.de in the "Software" subsection of the "Downloads" section.

When a target value is received for P limit, the output power of the inverter is limited to the specified power value. If the limit value is changed, the new value is adopted by way of a filter and a gradient limitation. The current power may be below the specified limit value because the available power (PV) or the target power value (storage) may be below the specified limit value. Depending on the inverter series, the settling time and gradient limitation may be adjustable.

Model	Parameter	Scaling factor	R/RW	Range	Description
123	`WMaxLimPct` Power Limitation	`WMaxLimPct_SF`	RW	0 – 100 [%]	Set power limitation to a specific % value.
123	`WMaxLimPct_RvrtTms` Timeout		RW	0 – 1000 [s]	Sets the time after which the inverter, if it does not receive a new power limit, will cancel it.

EN-US

Model	Parameter	Scaling factor	R/RW	Range	Description
					If the `Timeout` is set to `0` seconds, the transmitted power limit is permanently maintained, even in the event of a communication failure. Note: When the unit is restarted, the `Timeout` is reset to the set fallback time.
123	`WMaxLimPct_RmpTms` Increasing output gradient		RW	1 – 65534 [% S_{lim}/min]	Determines the dynamic behaviour in the event of a change in the active power set value. The active power is changed with the specified gradient. **NOTE: The gradient is overlaid with the settling time.**

If the applicable grid code requires the active power response to set point by a defined gradient or settling time, the device can be configured to comply with this gradient. It is also possible to implement the gradient in the plant control system. This second solution must be applied for all other inverters.

10.2.3 Voltage-dependent power reduction P(U)

If it is not possible to compensate adequately for voltage increase in the upstream distribution network by consumption of reactive power, it may be necessary to curtail the active power. In this case, P(U) control is available for making optimum use of the capacity of the upstream grid.

P(U) control reduces the active power that is fed-in as a function of the grid voltage using a prescribed characteristic curve as a basis. The P(U) control is implemented as an absolute power limit. The actual power of the inverter may vary freely below this limit based on possible fluctuation of the available power or set point, but will never increase above the absolute power limit.

[See figure 86 [▶ Page 88] and [See figure 87 [▶ Page 88] are two example configurations. In case of the Figure 1 without hysteresis the function is activated once the voltage exceeds the configured voltage of data point 1 (dp1). The power limit follows the characteristic, a straight line between dp1 and dp2. The function is deactivated once the voltage falls below dp1. In case of [See figure 87 [▶ Page 88] the function is activated once the voltage exceeds the configured voltage of dp2. dp1 is not activating the function in this case as the power limit remains at 100%. The power limit follows the characteristic, a straight line between dp2 and dp3, but due to the activated hysteresis, the power limit is not increased at falling voltage. The function is deactivated once the voltage falls below dp1.

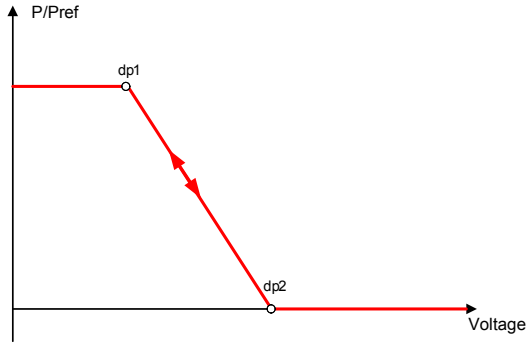

Fig. 86: Example characteristic without hysteresis

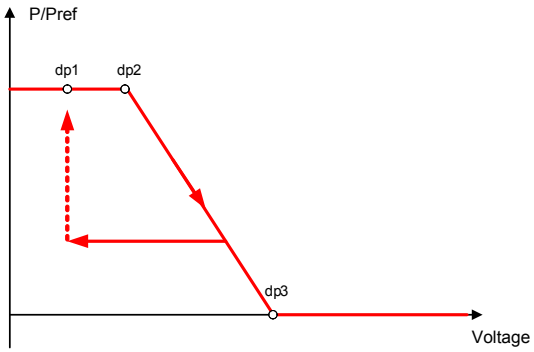

Fig. 87: Example characteristic with hysteresis and a deactivation threshold lower than the activation threshold.

EN-US

10.2.3.1 Parameters for P(U)

Country-spec. Settings	Menu level	Display/ Setting	Action in this menu/meaning
	1 2 3 4	Operation mode OFF | ON	☞ Regelverfahren aktivieren. **Off**: Deactivates dynamic grid support using dynamic reactive current. Dynamic grid support remains active on account of immunity to interference.
		Reference power Actual power | Nominal power	Specifies the power reference for the characteristic. 100 % to be the nominal power or the actual power at the instant of activation of the function, the instant when the voltage passes the configured node.
		Evaluated voltage Maximum phase voltage | Positive sequence voltage	☞ Select the voltage to be rated. Defines which voltage in a three-phase system is to be evaluated.
		Hysteresenmodus Off | On	**Off:** In Non-Hysteresis mode, the active power is increase immediately in cases of falling voltage. **On:** In Hysteresis mode the power is not increased in case of falling voltage.
		Deactivation gradient 0 – 65,534 [% / min] / 100 [% / min] / ⏠ 1	If the available power is above the actual output at the time of deactivation, the power increase back to the maximum power is limited. The limitation is implemented by an absolute power limitation that increases with a continuous gradient up to the maximum power. The actual power of the inverter may vary freely below this limit due to a possible fluctuation in the available power or the target value, but at no time increases above the absolute power limit.
		Deactivation time 0 – 60,000,000 [ms] / 100 [ms] ⏠ 1	Only evaluated with activated hysteresis mode: Monitoring time during which the voltage must remain below the lowest configured node before the function is deactivated.
		Output gradient limitation increase & Output gradient limitation decrease 1 – 65,534 [%/Min] / 65,534 [%/min] / ⏠ 1	Specifies the dynamic response on changing the active power for power increase. With a voltage change, the active power is changed with the specified gradient. The gradient is overlaid with the settling time. Specifies the dynamic response on changing the active power for power decrease. With a voltage change, the active power is changed with the specified gradient. The gradient is overlaid with the settling time.
		Settling time 1000 – 120,000 [ms] / 2,000 [ms] / ⏠ 10 [ms]	Determines the dynamic behaviour in the event of a change in the active power set value. With a voltage change, the active power is changed according to a PT-1 characteristic curve with a settling time of 5 Tau. **Note:** The settling time is overlaid with the increasing and decreasing gradient.
		Active curve 1 - 5	☞ Select the active curve. **NOTE: Up to 5 characteristic curves can be configured independently and one of them can be activated for regulation each time.**

EN-US

Country-spec. Set-tings	Menu level	Display/ Setting	Action in this menu/meaning
		Number of nodes 2 - 5 Power 0.0 – 100.0 [% P_{ref}] / 100.0 [% P_{ref}] / 0.1 Voltage 80.0 – 126.0 [% U_{nom}] / 112.0 [% U_{nom}] / 0.1	up to 5 support points definable The power value of the first and last value pair is also used as the maximum or minimum active power value that is valid across the limits of the characteristic curve.

10.2.4 P(f)

P(f) Active power response to overfrequence

Feed-in inverters must assist with frequency stability in the grid. If the grid frequency leaves the normal tolerance range (e.g. ±200 mHz), the grid is in a critical state. In the event of overfrequency, there is a generation surplus, in the event of underfrequency, there is a generation deficit.

PV-Systems must adapt their active feed-in power in relation to the frequency deviation. In case of overfrequency the adaption of power is defined by a maximum feed-in limit. The actual power of the inverter may vary freely below this limit based on possible fluctuation of the available power or set point, but will never increase above the absolute power limit.

$$P_{max-limit} = P_M + \Delta P$$

Fig. 88: Equation 1

$$\Delta P = g \cdot P_{ref} \cdot (f_1 - f)$$

Fig. 89: Equation 2

Equation 1 [See figure 88 [▶ Page 90] defines the maximum limit with ΔP according to Equation 2 [See figure 89 [▶ Page 90], P_M the actual power at the moment of activation and P_{ref} the reference power. In KACO PV inverters P_{ref} is defined as P_M, the actual power at the moment of activation. f is the actual frequency and f_1 is the activation threshold as configured.

$$\Delta P = \frac{1}{s} \times \frac{(f_1 - f)}{fn} \times Pref$$

Fig. 90: Equation 3

$$g = \frac{1}{s \cdot f_n}$$

Fig. 91: Equation 4

In some standards the power adaption is not defined by a gradient – g but by a droop – s as in Equation 3 [See figure 90 [▶ Page 90]. The droop s can be converted to a gradient g according to Equation 4 [See figure 91 [▶ Page 90].

During an overfrequency event the frequency f is above the activation threshold f_1 Therefore the term ($f_1 - f$) is negative and ΔP is a in-feed power reduction.

The measurement accuracy of the frequency is better than 10mHz.

The specific mode of operation of the function is specified by the grid operator or by applicable standards or grid codes. The configurability of the function makes it possible to meet a wide variety of standards and grid codes. Certain configuration options are not available in some country settings because the applicable standards or grid codes prohibit adjustments.

EN-US

P(f) Active power response to underfrequency

Some grid codes also require P(f) active power response to underfrequency. As PV plants typically operate at maximum power point there is no available power reserve to increase power in case of underfrequency.

However, in case of curtailment of the Plant due to market control, active power increase up to the available power is possible. As the inverter is not able to distinguish P constant set values between mandatory congestion management of the grid operator and market control this needs to be implemented in the site specific plant control infrastructure.

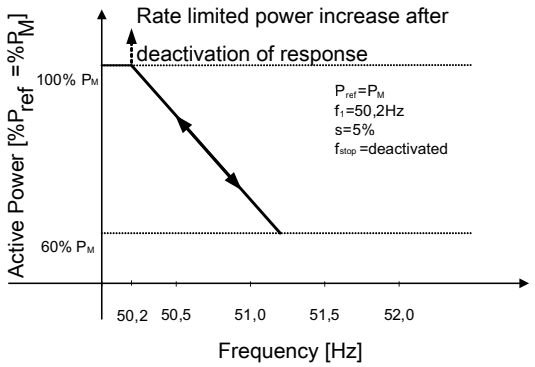

Fig. 92: Example behaviour without hysteresis (mode 2)

10.2.4.1 Parameters for P(f)

Country-spec. Settings	Menu level	Display/ Setting	Action in this menu/meaning
		P(f) Operation mode Off | Mode 1 | Mode 2	Activate or deactivate function. **Mode 1:** With hysteresis activated. See figure 3. **Mode 2:** Without hysteresis activated. --- FEHLENDER LINK ---
		Dynamic gradient mode On | Off	☞ Activate dynamic gradient.
		Maximum dynamic gradient frequency 50,22 – 70,5 [Hz] ◓ 0.01 [Hz] Minimum dynamic gradient frequency 45 – 50 [Hz] ◓ 0.01 [Hz]	**Dynamic gradient maximum frequency:** If dynamic gradient mode is activated, the gradient is calculated in order to guarantee a linear power adjustment and reach the maximum charging power if the frequency rises to the maximum configured frequency. **Dynamic gradient minimum frequency:** If dynamic gradient mode is activated, the gradient is calculated in order to guarantee a linear power adjustment and reach the maximum feed-in power if the frequency drops to the minimum configured frequency.
		Activation threshold with underfrequency: 40 – 50 [Hz] / 40 [Hz] / ◓ 0.01 Activation threshold with overfrequency: 50 – 60 [Hz] / 50.02 [Hz] / ◓ 0.01	**Activation threshold (f1) underfrequency:** Determines the frequency threshold for activating the function in case of underfrequency incidents. The active power adjustment is activated if the frequency falls below the configured value and mode 1 or 2 is activated. In mode 2, the function is deactivated if the frequency rises above the configured value. **Activation threshold (f1) overfrequency:** Determines the frequency threshold for activating the function in case of overfrequency incidents. The active power adjustment is activated if the frequency rises above the configured value and mode 1 or 2 is activated. In mode 2, the function is deactivated if the frequency falls below the configured value.

EN-US

Country-spec. Settings	Menu level	Display/ Setting	Action in this menu/meaning
		Threshold Area lower limit [Hz] 40 – 50 [Hz] / 47.5 [%/Hz] / 0.01	Only evaluated in mode 1. The function is deactivated if the frequency returns to the deactivation range and remains in this range for the duration of the deactivation time.
		Threshold Area upper limit [Hz] 50 – 60 [Hz] / 50.5 [Hz] / 0.01	
		P(f) Deaktivierungszeit 0 – 6,000,000 [ms] / 0 [ms] 1	Only evaluated in mode 1. The function is disabled if the frequency returns to the range between the minimum and maximum deactivation threshold and remains within this range for the duration of the deactivation time.
		P(f) intentional delay 0 – 5,000 [ms] / 0 [ms] 1	The activation of the function based on the activation threshold is delayed by the configured time. Note 1: This function is considered to be critical for the stability of the transmission grid and is therefore forbidden by many domestic grid connection directives. Note 2: This function is stipulated as a requirement by some domestic grid connection directives in order to prevent any negative impact on island detection. However, P(f) has no negative impact on KACO's enhanced island detection.
		P(f) settling time 200 – 2,000 [ms] / 200 [ms] 1	Determines the dynamic behaviour in the event of a change in the active power limit. In the event of a change in frequency, the active power is altered subject to a PT-1 characteristic curve using a settling time of 5 Tau. The settling time is overlaid with the increasing and decreasing gradient.
		Output gradient limitation increase & Output gradient limitation decrease 0 – 65,534 [%/Min] / 65,534 [%/min] / 1	Specifies the dynamic response on changing the active power for power increase and decrease. With a voltage change, the active power is changed with the specified gradient. **Note:** The gradient is overlaid with the settling time.
		P(f) deactivation gradient 1 – 65,534 [% S_{lim}/ min] / 10 [% S_{lim}/ min] / 1	If the available power is above the actual output at the time of deactivation, the power increase back to the maximum power is limited. The limitation is implemented by an absolute power limitation that increases with a continuous gradient up to the maximum power. The actual power of the inverter may vary freely below this limit due to a possible fluctuation in the available power or the target value, but at no time increases above the absolute power limit.

10.3 FRT

Dynamic grid support (Fault Ride Through)

A generator plant's ability to remain immune to voltage drops and voltage spikes in the supply system is a key element in establishing a reliable energy supply. Immunity to interference ensures that brief disruptions do not result in a loss of generation capacity in a larger range of an interconnected grid. Grid support by a fast feeding of residual current also limits the spatial extent of the incident.

With its dynamic grid support by way of immunity, the device has this characteristic. The ability to remain on the grid is particularly relevant. The protective settings also determine the device's ability to remain on the grid or not. Protective settings take the upper hand over the capacity of immunity to interference.

EN-US

10.3.1 Dynamic grid support by way of immunity to interference

Interference immunity against undervoltage

Voltage drop above the limit curve in can be overcome without the need for shutdown from the grid. The feed-in power remains constantly within the limits of the maximum continuous current of the inverter.

If a reduction in power occurs, the power is brought back up to the pre-fault level within 100 ms of the voltage returning.

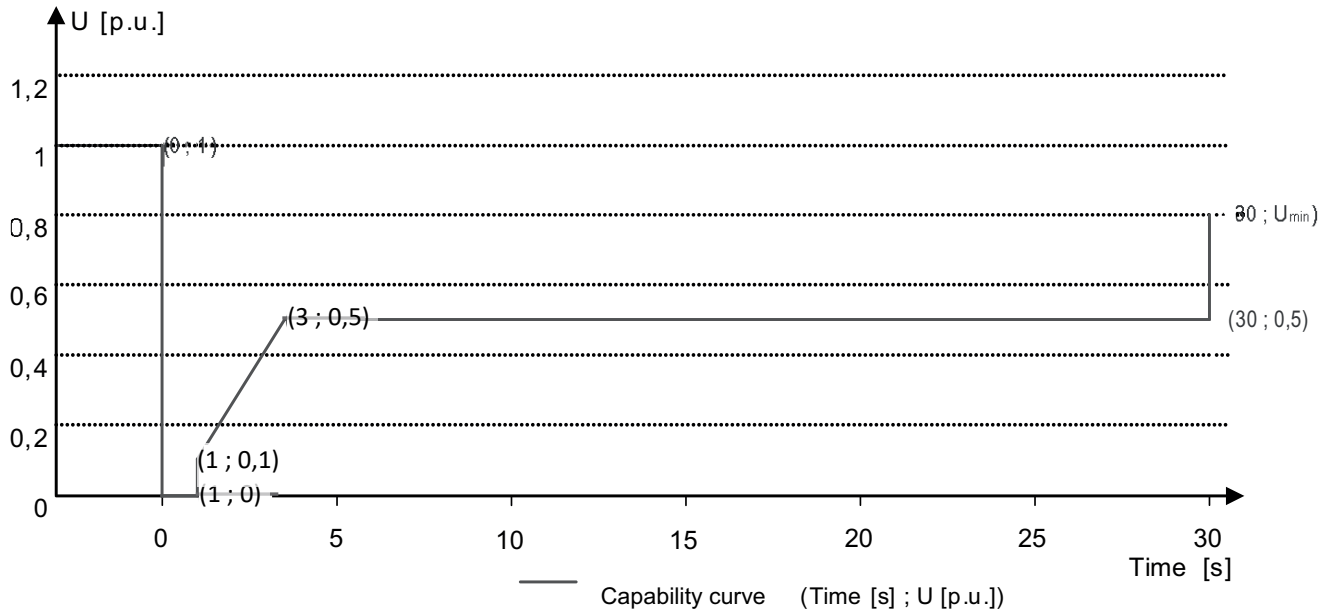

Fig. 93: Immunity to interference characteristic curve relative to the nominal voltage (p.u.) of the blueplanet 125.0TL3

The inverters can ride through voltage swells provided the voltage level does not remain above the continuous operation voltage range for longer than 100 s and does not increase beyond the short-term max. operating voltage range (up to 100s). The values specific to each inverter can be found here.

The interface protection (voltage,frequencey, ant-islanding) integrated in the inverter is configurable in a range allowing the behaviour above. However, if the interface protection setting is limiting the voltage time characteristic, the interface protection will trip and interrupt the ride through as configured.

10.3.2 Dynamic grid support using a fast feeding of residual current

Bei Aktivierung der dynamischen Netzstützung durch schnelle Fehlerstromeinspeisung wird zusätzlich zu den oben beschriebenen Eigenschaften der Störfestigkeit gegen Einbrüche und Spitzen Fehlerstrom eingespeist.

Der Wechselrichter passt bei Auftreten eines Einbruches oder einer Spitze sofort seine Stromeinspeisung an, um die Netzspannung zu stützen. Die Stützung erfolgt bei einem Spannungseinbruch mit übererregtem Blindstrom (entsprechend einer kapazitiven Last), bei einer Spannungsspitze mit untererregtem Blindstrom (entsprechend einer induktiven Last). Im Blindstrom-Prioritätsmodus wird der Wirkstrom soweit reduziert, wie zur Einhaltung der Grenzen des maximalen Dauerstroms des Wechselrichters notwendig ist.

Ein Einbruch oder eine Spitze wird erkannt, wenn entweder der eingestellte normale Betriebsspannungsbereich durch mindestens eine Phase-Phase- oder Phase-Neutral-Spannung überschritten wird oder wenn ein Spannungssprung der Mit- oder Gegensystemkomponente auftritt, der größer als das eingestellte Totband ist. Die Höhe des Spannungssprungs des Mit- und Gegensystems entspricht der Differenz zwischen der Vorfehlerspannung und der Ist-Spannung basierend auf der Referenzspannung. Die Vorfehlerspannung wird als Mittelwert über 50 Perioden berechnet.

$$\Delta u = \frac{U - U50per}{Uref}$$

Fig. 94: Formula n° 1

Die Anpassung des Blindstroms erfolgt mit einer Anschwingzeit von <20 ms und einer Einschwingzeit von <60 ms nach Eintritt des Ereignisses. Mit der gleichen Dynamik wird während des Ereignisses auf Spannungsänderungen oder bei Ereignissende auf die Spannungswiederkehr reagiert.

Der eingespeiste dynamische Blindstrom berechnet sich für das Mit- und Gegensystem gemäß folgender Formel:

EN-US

$$I_b = \Delta u * k * I_N$$

Fig. 95: Formula n° 2, depending from the nominal current IN of the inverter

Δu berechnet sich für Mit- und Gegensystem jeweils aus der Differenz der Vorfehlerspannung und der aktuellen Spannung bezogen auf die Referenzspannung. Die Vorfehlerspannung wird als 1-Min.-Mittelwert berechnet.

$$\Delta u = \frac{U - U1min}{Uref}$$

Fig. 96: Formula n° 3

Die Definition eines Spannungssprungs in Vornorm EN 50549-2 sowie in VDE-AR-N 4120 und VDE-AR-N 4110 hat zur Folge, dass in der Regel bei Ereignissende, Fehlerklärung und Rückkehr der Spannung in den fehlerfreien Zustand erneut ein Spannungssprung erkannt wird. Dies führt dazu, dass in einem aktiven Betriebsmodus die dynamische Netzstützung durch schnelle Fehlerstromeinspeisung auch nach Ereignissende aktiv bleibt und Blindstrom nach Formel (2) und (3) eingespeist wird. Die dynamische Netzstützung durch schnelle Fehlerstromeinspeisung wird dann nach der konfigurierten minimalen Support-Zeit, in der Regel 5 s, deaktiviert.

When exceeding the Zero current threshold the inverter stops feeding in any current. If the inverter is injecting reactive power before the fault, the reactive power will resume to its pre fault Q with the settling time adjusted in the activated reactive power control mode after the end of the fault.

$$I_b = (\Delta u_1 - tb) * k * I_N$$

Fig. 97: Formula n° 4

10.3.3 Extract from FRT menu

Country-spec. Settings	Menu level	Display/ Setting	Action in this menu/meaning
	1 2 3 4	FRT (Fault Ride Through)	**NOTE: The device supports dynamic grid stabilization (Fault Ride-Through).NOTICE! More detailed information at** [See section 10.3 Page 92]
		Operating mode – On | Off Setting | Manual |Predefined zero current	**Setting: Manual** All parameters can be configured independently. **Setting: Predefined zero current** Dynamic grid support active on account of immunity to interference and zero current feed-in. During a voltage incident, the current in the inverter is reduced to zero. All parameters are pre-configured, only the activation threshold for zero current has to be configured.
		Priority – Reactive current limitation | Active current priority	**Priority: Reactive current priority** Dynamic grid support active on account of immunity to interference and fast feeding of residual current. The inverter feeds additional reactive current according to the formulae (2) and (4). **Priority: Effective current priority** Dynamic grid support active on account of immunity to interference and fast feeding with active current priority. The inverter feeds in as much active power as available. If, as a result of this, the maximum continuous current is not achieved, the device supplies additional reactive current according to the formulae (2) and (4) up to the limit of continuous current.

EN-US

Country-spec. Settings	Menu level	Display/ Setting	Action in this menu/meaning
		Zero current undervoltage threshold Zero current threshold over voltage 0 – 80 [% Unom] / 10 [% Unom] / 0.1 108 – 129 [% Unom] / 125 [% Unom] / 0.1	If one or more phase/phase or phase/neutral conductor voltages move above the configured threshold, the inverter changes to zero current mode. The total current is regulated to virtually zero.
		Reference voltage 80 – 110 [% Unom] / 100 [% Unom] / 0.1 [Unom]	Nominal value of the phase/neutral conductor voltage used as a reference voltage for formula (1) and (3). Adjustable in the range from level 1 undervoltage protection to level 1 overvoltage protection.
		Constant k negative sequence dip Constant k negative sequence swell k 0 – 10 / 2 / 0.1	Amplification factor for the negative sequence used in the calculation of the reactive current using formulae (2) and (4) Can be configured independently for drops and spikes.
		Constant k positive sequence dip & Constant k positive sequence swell k 0 – 10 / 2 / 0.1	Amplification factor for the negative sequence used in the calculation of the reactive current using formulae (2) and (4) Can be configured independently for drops and spikes.
		Dead band 2 – 120 [% Uref] / 10.0 [% Uref] / 0.1	Dynamic grid support through fast feeding of residual current activated in the case of voltage events with a voltage change greater than the dead band.
		Dynamic reactive current only Off | On	**Standard**: The reactive current according to the formulae (2) and (4) is fed as **additional** reactive current. The means that sum of the pre-fault and additional reactive current is fed in. **Only dynamic:** The reactive current according to the formulae (2) and (4) is fed in as absolute reactive current. This means that regardless of the reactive current before the voltage event, only the reactive current is fed in according to the formulae (2) and (4) is fed in during the voltage event.
		Dead band mode Mode 1 | Mode 2	**Mode 1**: When calculating the reactive current, the value of the dead band is not subtracted from the amount of voltage change. For overvoltage and undervoltage events, formula (2) therefore applies. **Mode 2:** When calculating the reactive current, the value of the dead band is subtracted from the amount of voltage change. For overvoltage and undervoltage events, formula (4) therefore applies: $I_b=(\Delta u_1-tb)*k*I_N$

EN-US

Country-spec. Settings	Menu level	Display/ Setting	Action in this menu/meaning
		Reference voltage 80 – 110,0 [% Unom] / 100 [% Unom] / 0.1 & Minimum operating voltage activation 45 – 125,0 [% Unom] / 80 [% Unom] / 0.1 & Maximum operating voltage activation 45 – 125,0 [% Unom] 80 [% Unom] / 0.1	Dynamic grid support via fast feeding of residual current is activated on voltage events with at least one phase/phase or phase/neutral conductor voltage outside the configured normal operating voltage range. Dynamic grid support via fast feeding ore residual current is deactivated when the voltage returns to the reference operating voltage range.
		Reactive current limitation 0 – 100 [% Imax] / 100 [% Imax] / 1	The reactive power component of the fast feeding of residual current is limited to permit a defined proportion of active power components.
		Minimum support time 1,000 – 15,000 [ms] / 5,000 [ms] 10	If due to a voltage jump in accordance with formula (1) and the configured dead band is activated, the dynamic grid support is deactivated via fast feeding of residual current after the minimum support time elapses.

10.4 Other grid support functions effective on active power

10.4.1 Permanent power gradient limitation

The maximum active and apparent power to be installed for a generation plant is agreed between the grid operator and plant operator. The device capacity of a plant can be set to the exact agreed value using the S_{lim} and P_{lim} settings. To ensure that the load on the devices in the plant is uniform, we recommend distributing the performance reduction evenly across all devices.

Some grid connection rules insist that the agreed reactive power be supplied from every operating point of the plant without a reduction in the actual active power. Considering the fact that all KACO TL3 inverters have a semi-circular(PV) full-circular(BI) P-Q operating range, a reduction in the active power is, however, required during operation at maximum active power because an apparent power reserve is not available. By adjusting P_{lim} the maximum active power can be restricted in order to establish an apparent power reserve and ensure that the agreed reactive power can be delivered from any active power operating point. The graphic [See figure 98 [Page 96] shows the appropriate P-Q operating range with a required example active power of 48% of the maximum apparent power of the plant or 43% of the maximum active power of the plant.

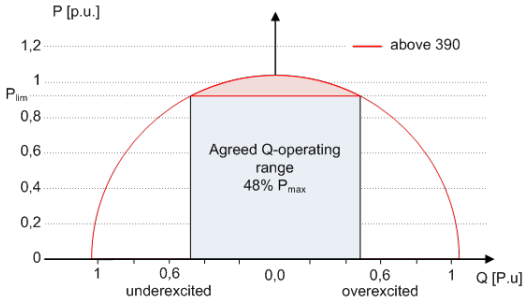

Fig. 98: P-Q operating range with limited active power (Qmax=Smax≠Pmax) for PV inverters

The power reduction parameters can be adjusted in SunSpec model DID123. During this process, you should also check whether internal and/or external power reduction is active.

EN-US

Internal power limitation	Parameters for external power limitation	Parameters for power limitation
Status = Aktiv	Status = Aktiv	Parameter im SunSpec Model 123:
Maximum apparent power S_{lim}=**100000 VA**		„WMaxLimPct" = 50% P_{lim} (**ca. 40000 W**)
Maximum active power P_{lim}= **80% (ca. 80000 W)**	AC fallback active power Pfb = **75%** P_{lim} **(ca. 60000 W)**	„WMaxLimPct_RvrtTms" = **60s** "WMaxLimPct_RmpTms" = **2s**
	PT1 Settling time = 1s	"WMaxLim_Ena" = **1**

Tab. 9: >Sample parameters for power limitation

If the ramp time "`WMaxLimPct_RvrtTms`" in the SunSpec model is specified as 0 s, then the internal output gradient is used. Otherwise, the set value will be used.

Irrespective of the communication protocol used, the settling time "`WMaxLim_Ena`" is used in order to transfer the new power value. Otherwise, the internally configured value will be used.

The additional ramp time "`WMaxLimPct_RmpTms`" specifies the jump time from a power value to the new power value.

The following formulae are used to calculate the gradient $S_{lim/min}$:

$$\text{GradientWattPerMin} = \frac{\left(\frac{WMaxLimPct}{100} \times Plim - Pactual\right)}{WMaxLimPct_{RmpTms}} \times 60 \times \frac{100}{Slim}$$

$$\text{GradientWattPerMin} = \frac{\left(\frac{50\%}{100} \times 80000\ W - 60000\ W\right)}{2\ s} \times 60 \times \frac{100}{100000 VA}$$

$$\textbf{GradientWattPerMin} = -600\ \%\ \boldsymbol{Slim\ /min}$$

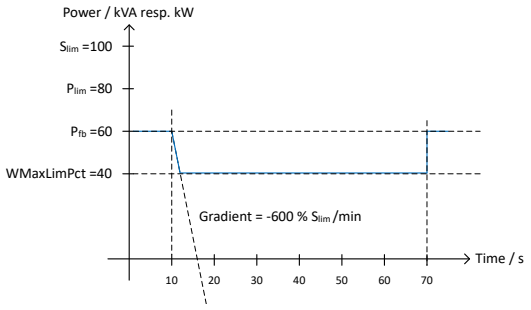

Fig. 99: Power gradient according to sample parameters and calculation

The following formulae are used to calculate the Q filter parameter and cos φ gradient:

$$\text{GradientVArPerMin} = \frac{\left(\frac{VArMaxPct}{100} \times Slim - Qactual\right)}{VArPct_RmpTms} \times 60 \times \frac{100}{Slim}$$

Fig. 100: Formula for calculating the Q filter parameter

$$\text{GradientVArPerMin} = \frac{\left(\frac{VArMaxPct}{100} \times Slim - Qactual\right)}{OutPFSet_RmpTms} \times 60 \times \frac{100}{Slim}$$

Fig. 101: Formula for calculating the cos φ gradient (internal power gradient)

10.4.1.1 Parameters for permanent power limitation

Country-spec. Settings	Menu level	Display/ Setting	Action in this menu/meaning
		Power limitation Check activation	Activate or disable the power limitation.

EN-US

Country-spec. Settings	Menu level	Display/ Setting	Action in this menu/meaning
		Maximum apparent power (S_{lim}) 1000 – S_{max} [VA]	The apparent power is limited globally to the configured value in VA. As soon as S_{lim} has been configured, all of the active and reactive power control values will use S_{lim} as 100% instead of S_{max}.
		Maximum active power (P_{lim}) 1 – 100 [% S_{lim}]	Active power is limited globally to the configured value in % S_{lim}.

10.4.2 Soft start up / power ramp-up limiting

A soft start-up function is available to prevent the grid from being negatively impacted by a sudden increase in feed-in power from the inverters.

When the inverter is activated or switched on, the increase in power is restricted by the set gradient. It is possible to configure whether the soft start-up should occur every time the device is switched on, only upon initial start-up each day or only upon start-up after the device has been switched off by grid protection. Due primarily to the fact that there is the risk that many plants could increase their power levels simultaneously after they have been switched off by grid protection, a soft start-up is usually only required for start-up after a device has been switched off by grid protection.

The soft start up is implemented by an absolute power limitation that increases with a continuous gradient up to the maximum power. The actual power of the inverter may vary freely below this limit due to a possible fluctuation in the available power or the target value, but at no time increases above the absolute power limit.

10.4.2.1 Parameters for soft start-up

Country-spec. Settings	Menu level	Display/ Setting	Action in this menu/meaning
		Power ramp	**NOTE: The power ramp allows a moderate increase of the Performance possible.**
		Gradient 1 – 600 [% / min]	Gradient of power limit. The maximum power limit increase to 100% of nominal power with the gradient specified.
		After every connect	Soft start ramp up is activated for every connection of the inverter to the grid.
		After first connect	Soft start ramp up is activated for the first connection of the inverter to the grid on a particular day or after complete reboot of the inverter (AC and DC disconnected).
		After grid error	Soft start ramp up is activated for connection of the inverter to the grid after trip of the internal interface protection or via the external grid protection port (Powador-protect)

10.4.3 Normal operation power gradient

In the case of very large plants, it may also be necessary to restrict the change in power level during normal operation. If the set value (for increase and decrease in power level) and the solar irradiation change (for increase in power level), then the grid feed-in power is increased or decreased in line with the configured gradient. A limitation is not possible if the solar irradiation is reduced.

This function isn't active for changes in the power, which are defined by another grid support action such as the return of power after Fault Ride Through, P(f), P(U).

EN-US

10.4.3.1 Parameters for power gradient in normal operation

Country-spec. Settings	Menu level	Display/ Setting	Action in this menu/meaning
		Operation Mode On / Off	Activate or disable the power gradient limtitation in normal operation.
		Increasing gradient 1-65534 [% S_{max} / min]	The change in the active power is limited to a configured power increase gradient.
		Decreasing gradient 1 – 65534 [% S_{max} / min]	The change in the active power is limited to a configured power decrease gradient.

10.5 Advanced islanding detection

Due to decentralized generation, there is the possibility that a deactivated part of the grid will remain live in an unintended island due to the balance of load and generation in this part of the grid. The detection of unintended island formation is an important function of decentralized generating units and is related to the prevention of damage to equipment as well as safety of personnel.

Depending on the structure and the operation of the distribution grid several dangers exist:

- In case of maintenance work in a distribution grid, personnel may be placed in danger if the deactivated part of the grid remains live as an island. This is especially the case if not all safety rules are followed.
- If fast auto-reclosure is used in a distribution grid and the deactivated part of the grid remains live as an island, reclosure will likely happen during phase displacement which might cause damage to rotating machinery on the grid.
- In the event of a fault in a medium voltage grid, the faulty part of the grid is disconnected. If the fault has a significant resistance, the deactivated part of a medium-voltage grid remains live as an island. Depending on the type of fault, but explicitly in case of a fault in the transformer, dangerous medium voltage might be accessible or even present in low-voltage appliances.

Especially for the last example very fast disconnection of the generating units to cause collapse of the forming island is necessary. At the same time any island formation detection method may cause false tripping. The industry is therefore in constant research to develop methods that are fast and reliable and at the same time reliably prevent false tripping.

Enhanced island detection method

KACO new energy's advanced islanding detection, uses a strategy to reliably detect islanding formation that is based on the characteristic differences between an interconnected grid and an islanded grid, thus ensuring reliable fast detection and prevention of false tripping.

An interconnected grid is dominated by rotating machinery, as a consequence frequency is proportional to active power balance and voltage is proportional to reactive power balance. In contrast an islanded grid behaves like a resonant circuit, as a consequence frequency is proportional to reactive power balance and voltage is proportional to active power balance. The active enhanced island detection method detects this difference by monitoring the behaviour of the grid. The enhanced island detection is monitoring the natural fluctuation of the grid frequency and injects a minimal reactive power proportional to the rate of change of frequency. In the moment an island is formed, the connected power grid closes a positive feedback loop which allows the inverter to detect the changed situation and to disconnect. In case of formation of an island, the inverter disconnects within some 100 ms, well below 1000 ms.

- The number of parallel inverters does not affect the reliability of this function.
- This method also guarantees the minimisation of effects on the distribution grid.
- In normal operation no effects on harmonic content, flicker and grid stability are detected.

This detection method is combined with a two stage passive rate of change of frequency (ROCOF) observation.If the ROCOF of the grid exceeds the configured disconnection threshold of stage 1 for the configured disconnection time, the device switches to zero current mode. If the ROCOF of the grid exceeds the configured disconnection threshold of stage 2 for the configured disconnection time, the device switches off. In case of an island, this will shut down the island instantaneously. If the grid stabilizes, what might be the case if the ROCOF event was due to a short disturbance in the power

EN-US

grid, the inverter will resume normal operation. With stage 1 active, the device has switched to zero current mode and will recommence feed-in after only 100 ms. With stage 2 active, the device has switched off and the set reconnection conditions shall apply.

10.6 Q on demand

⚠ DANGER

When deactivating the `night shut-off` ("Q on Demand" operation), a high DC voltage can continue to be present not only on the string combiner but also on the device, even though the string combiner is switched off.

1. In case of maintenance, the device must also be deenergized on the AC-side.
2. We recommend attaching an appropriate hazard warning on the string combiner.

The "Q on Demand" function can also provide reactive power Q outside the PV feed-in times (e.g. at night) to stabilize the grid. The function is only available from the named firmware version [See section 1.1 Page 4].

Important requirements:

- "Night shutdown" function deactivated in the menu
- Device is connected on the AC side
- Device was in feed-in operation.

First priority is given to the specifications that the inverter receives from the grid operator via the park controller via Ethernet or RS485. Second priority is given to the parameters for Q constant and Q(U) stored in the inverter.

In the event of AC disconnection during "Q on Demand" operation outside of feed-in operation, renewed use of the "Q on Demand" function is only possible after proper feed-in operation (with sufficient DC supply). The existing deactivated "night shutdown" also remains active.

The following illustrations show normal operation in the P-Q operating range, during the day (feed-in operation) (1) and „Q on Demand" operation at night (2).

Only reactive power is generated at night. Inevitably, some active power is required for the internal power supply to maintain the preset reactive power functions in "Q on Demand" mode (see pos. 2 in the negative P range).
Setting of the reactive power mode: See table : Configuration via web user interface [Page 66].

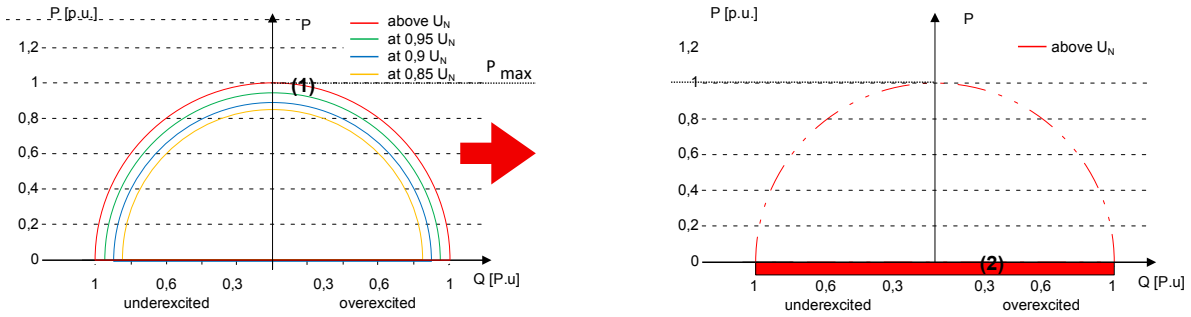

Key

(1) Normal operation: Active power and reactive power provision at different voltages.

(2) „Q on Demand" operation : Reactive power provision at nominal grid voltage outside of feed-in operation.

EN-US

11 Maintenance and troubleshooting

11.1 Visual inspection

Inspect the product and cables for visible external damage and note the operating status display, where applicable. In the event of damage, notify your installation engineer. Repairs may only be carried out by authorised electricians.



⚠ DANGER

Dangerous voltage due to two operating voltages

Severe injuries or death may occur if the cables and/or terminals/busbars in the device are touched. The discharge time of the capacitors is up to 5 minutes.



1. Only appropriately qualified electricians authorized by the mains supply network operator are permitted to open and maintain the device.
2. Before opening the device: Disconnect the AC and DC side and wait at least 5 minutes.



NOTE

There are components within the housing that may only be repaired by our customer service team.

1. Do not attempt to rectify faults that are described here (in the troubleshooting chapter). Get in touch with our customer service team. Only carry out maintenance activities that are described here.
2. Log each maintenance activity in the “Service” menu item: “Service log” (exception: “User” interface) [See section 9.4.2 Page 54]
3. The device should be checked for proper operation by a qualified electrician at regular intervals. Always contact the service team of the system manufacturer if you encounter any issues.

11.2 Cleaning

11.2.1 Cleaning the housing

⚠ CAUTION

Risk of damage to the device during cleaning!

1. Do not use compressed air or high-pressure cleaners.
2. Use a vacuum cleaner or a soft brush to remove dust from the fan cover and from the top of the device on a regular basis.
3. Remove dust from the ventilation inlets if necessary.

11.2.2 Cleaning the heat sink



⚠ WARNING

Risk of burning due to hot surface

Heat sinks become very hot during operation.

1. Never touch the heat sinks after starting up the device.
2. Wait until a cooling time of at least 10 minutes has elapsed before starting the cleaning process.

EN-US

NOTE

Refer to our service and guarantee conditions on our homepage.

✓ The cleaning intervals must be adapted to match the ambient conditions of the installation location.

1. In sandy environments, we recommend cleaning the heat sinks and fans every quarter.

↻ Cleaning the heat sink requires the fan to be removed.

↻ Switch off the device and secure it against restart.

↻ Keep a suitable brush ready for cleaning.

1. Remove the hood and fan [See section 11.3 Page 102].
2. Clean the free space between the cover and the heat sink using suitable brushes.
3. Clean the heat sink with a suitable brush.

. **NOTE: Do not use any aggressive cleaning agents and ensure that no other components come into contact with fluids.**

⇨ Cleaning completed – if necessary, remount the fans.

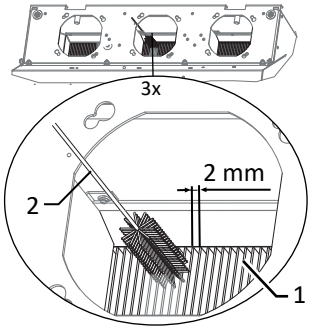

Fig. 102: Cleaning the cooling fins from above

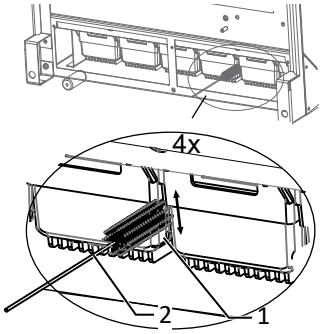

Fig. 103: Cleaning the cooling fins from below

1	Heat sinks / space between heat sinks
2	Brush (max. wire diameter 2mm)

11.3 Replacing the fans

Removing the cover

↻ It has been ensured that there is no AC/DC voltage present

1. Remove the fastening screws on the cover from both sides [🛠_T20]
2. Lift up the cover from both sides and press it out of the mounting clips.
3. Set the cover to one side.

⇨ Proceed with the cleaning or removal of the fans.

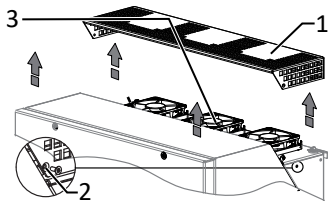

Fig. 104: Removing the cover

1	Cover
2	Fastening screw
3	Mounting clips
4	Fans

EN-US

Dismounting the fan

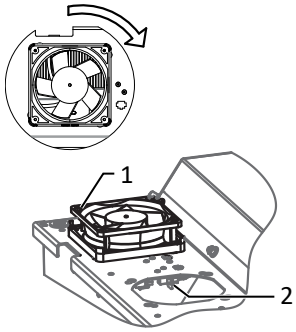

Fig. 105: Removing the fans

1 Fans
2 Connector

↻ Replace fan time requirement: (10 min each fan) 30 min

↻ It has been ensured that there is no AC/DC voltage present.

↻ **DANGER! Risk of injury from starting fans: If the device is not completely disconnected from the voltage source, the fan may start up unexpectedly and sever or injure limbs. This may also cause damage to the fan and impair the functionality of the device.**

↻ Cover hood for fans removed.

1. Wait until the 3 fans have stopped rotating.
2. Rotate the defective fan through approx. 10° in the clockwise direction and remove it carefully using the collar.
3. Release the interlock and remove the connector plug from the inside of the housing.
4. Remove the fan.
5. If necessary, clean the heat sink from above.

⇨ Install the replacement fan.

Installing the fans

↻ You have removed the defective fan.

1. Plug in the connector plug of the new fan at the connection socket provided within the housing and check the interlock.
2. Insert the replacement fan into the collar holder.
3. Turn the fan approx. 10° anticlockwise.
4. If necessary, replace another fan.

⇨ Fit the cover back in place.

Fitting the interior fan

NOTE: If an internal fan fails, an error message is displayed and the device limits its power to max. 50% of the max. possible power, in contrast to external fans.

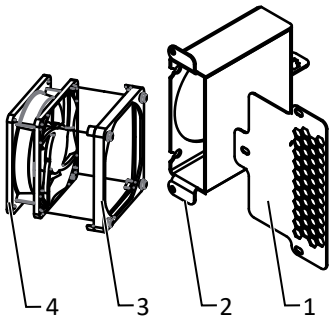

Fig. 106: Disconnecting the interior fan

1 Fan grille
2 Housing
3 Collar
4 Fan

↻ You have removed the interior fan.

1. Slide the collar with the fan lengthways off the housing and lift it out.
2. Carefully pull the connected fan off the collar.
3. Press the replacement fan into the collar holder.
4. Plug the connector plug of the interior fan into the connection socket provided and check that it is locked.
5. Insert the collar with the fan into the housing and check that it is firmly seated.
6. Mount the fan grille on the housing.
7. Mount the ventilating plate on the board.

⇨ Interior fan successfully replaced.

EN-US

Fitting the cover

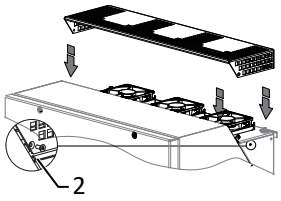

Fig. 107: Fitting the cover

2 Fastening screw

↻ The fan has been correctly installed and all impurities in the area of the cover have been removed.

1. Lift up the cover from both sides, place it on the mounting clips and carefully press it in.
2. Insert the fastening screws into the cover on both sides and tighten them [_T20 / 17.70 In-lbs].

⇨ You may now start up the device [See section 8 Page 39].

11.4 Replacing overvoltage protection

AC overvoltage protection

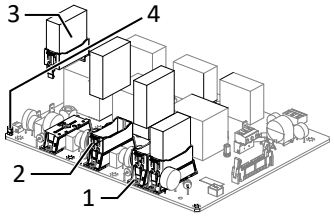

Fig. 108: Inserting AC overvoltage modules

1 AC surge protection socket
2 AC intermediate plug-in frame
3 AC surge protection module (4 slots)
4 SPD monitoring jumper

↻ **NOTE: If the message "Overvoltage protection module defective" appears in the web interface, these modules must be replaced.**

↻ **NOTE: Ensure that the device is completely free of AC/DC voltage.**

1. [[See section 7.2 Page 25]].
2. Remove faulty modules individually from the plug-in frame and replace with a module of the same type.

NOTE: Different AC surge protection modules are used. The designation on the PCB must match the module code (GTD/MOV).

1. Insert the AC overvoltage protection modules into the plug-in frame one after another.
2. Ensure that all protective elements are properly secured.

⇨ Proceed with the installation of the device.

DC overvoltage protection

↻ **NOTE: If "defective" appears in the status display of the overvoltage protection module, it must be replaced.**

↻ **NOTE: Absence of AC/DC voltage ensured.**

1. [See section 7.2 Page 25].
2. Unlock faulty modules via the locking latch.
3. Remove the defective modules one-by-one out of the DC base and replace with a module of the same type.

. **NOTE: The coding at the base plug-in position must match the coding on the module.**

4. Insert the DC overvoltage protection modules into the DC base one after another.
5. Secure new modules using the locking latch.
6. Ensure that all protective elements are properly secured.

⇨ Proceed with the installation of the device.

11.5 Shutting down for maintenance / troubleshooting

Shutdown sequence

1. Switch off the grid voltage by turning off the external circuit breakers.
2. Disconnect the DC side using the DC isolator switch.

. **DANGER! The DC cables are still live**

⇨ After shutdown, wait 5 minutes before opening the device.

11.6 Faults

11.6.1 Procedure



⚠ DANGER

Lethal voltages are still present in the connections and cables of the device even after the device has been switched off and disconnected!

Severe injuries or death may occur if the cables and/or terminals/busbars in the device are touched.

1. If a fault occurs, notify an appropriately authorized and qualified electrician or KACO new energy GmbH Service.
2. The operator can only carry out actions marked with a B.

EN-US

11.6.2 Rectifying faults

B = Action of the operator; E = The indicated work may only be carried out by an authorized electrician! ; K = The indicated work may only be carried out by a service employee of KACO new energy GmbH!

Fault	Possible cause	Explanation/remedy	By
The LEDs do not light up	Grid voltage not available	› Check whether the DC and AC voltages are within the permitted limits (see Technical Data)	E
		› Notify KACO Service.	E
The device stops feeding into the grid shortly after being switched on, even though there is sunlight present.	Defective circuit-breakers in the device	If the circuit-breakers are defective, the device will recognize this during the self-test.	K
		› Ensure that there is sufficient PV generator power.	E
		› If the grid separation relay is defective, have it replaced by KACO Service.	
		› Notify KACO Service.	
Device is active but not connected to the grid. A grid fault is displayed on the status LED.	Grid-feed is interrupted due to a grid fault.	Due to a grid fault (over/undervoltage, over/underfrequency), the device stopped the feed-in process and disconnected from the grid for safety reasons.	
		› Change the grid parameters within the permitted operating limits (see the "Start-Up" section).	E
The grid fuse trips.	The grid fuse capacity is too low.	In case of a high level of solar radiation, the inverter exceeds its rated current for a short period, depending on the PV generator.	
		› Select the capacity of the device's pre-fuse to be somewhat higher than the maximum feed-in current (see the "Installation" section).	E
		› Contact the grid operator if the grid failure continues to occur.	E
The grid fuse trips.	Damage to the device's hardware.	If the grid fuse trips immediately when the device goes into feed-in mode (after the start-up period is complete), the device's hardware is probably damaged.	
		› Contact KACO Service to test the hardware.	E
The device is displaying an impossible daily peak value.	Faults in the grid.	The device continues to operate as normal without losses to the yield, even when an erroneous daily peak value is displayed. The value is reset overnight.	
		› To reset the value immediately, switch the device off by disconnecting it from the grid and switching off the DC, then switch it back on.	E
Daily yields do not correspond to the yields on the feed-in meter.	Tolerances of the measuring elements in the device.	The measuring elements of the device have been selected to ensure maximum yields. Due to these tolerances, the daily yields shown may deviate from the values on the feed-in meter by up to 15%.	E
		› No action.	
Device is active but not connected to the grid.	Generator voltage too low; grid voltage or PV generator voltage unstable.	The PV generator voltage or power is not sufficient for feed-in (solar radiation is too low). The inverter checks the grid parameters before the feed-in process begins. The length of time it takes to switch back on again differs from country to country, depending on applicable standards and regulations, and may be several minutes. The starting voltage may have been set incorrectly.	
		› Adjust starting voltage in the Parameters menu if required.	E
		› No action	

EN-US

Fault	Possible cause	Explanation/remedy	By
Even with high radiation levels, the device does not feed the maximum power into the grid.	Particular ambient conditions.	Because the temperatures inside the device are too high, the device reduces its power to prevent damage to the device. Note the technical data. Ensure that the convection cooling is not impeded from the exterior. Do not cover the cooling fins.	
		› Ensure sufficient cooling of the device.	B
		› Remove any foreign bodies that may be on the device.	B
		› Clean the cooling fins	E
	DC fuse defective	A generator string is disconnected from the device due to a defective fuse. Establish the cause of tripping by measuring all DC strings with a clip-on ammeter. - If there is no current flowing in a string, then the associated DC fuse is defective.	
		Check the no-load voltage and layout of the PV generator. Replace the damaged modules if necessary.	B, E
		› Replace the PV fuse with a fuse size that is of the same type.	

Tab. 10: Troubleshooting

11.7 Fault messages

Many event messages indicate a fault in the grid. They are not operational faults of the device. The triggering levels are defined in standards, e.g. VDE0126-1-1. The device shuts down if the values exceed or fall below the approved levels.

Fault LED (red)	Status	Explanation	LED
rx	FS (fault status)	– The fault relay has switched.	On
		– Feed-in was ended due to a fault.	
	OS (operating status)	– The fault relay releases again.	Off
		– The device feeds back into the grid again after a country-specific time period.	

11.8 Troubleshooting

The following table lists the possible ProLog© status messages that the device can display by means of the LC display / web user interface and the LEDs.

No.	Result message	Explanation	Remedy	Pers.
_	0	Device waiting until the start voltage is reached.	PV modules must be sufficiently supplied with daylight => if necessary, remove covers.	-
1	Waiting for feed-in	Message will be displayed when the device is started. The generator voltage is lower than the starting voltage (pre)set on the device or the grid is still being checked for stability.	Start voltage set too high. => Check the DC configuration of the PV system and reduce the “Start voltage” in the menu, if necessary.	-
2	Insufficient generator voltage / insufficient battery voltage	Insufficient generator voltage and power, status before the transition to night shutdown.	> Is the web user interface showing the correct voltage measured on the DC terminals? => If necessary, check the wire voltage individually. > XL version: Is the DC isolator switch switched off? => Switch off the DC isolator switch > Is a DC polarity reversal present? => Check polarity according to chapter 7.5. > Is the firmware completely installed? => Reinstall the firmware according to “Software-Update-Guide xxx”.	-

EN-US

No.	Result message	Explanation	Remedy	Pers.
4	Yield counter for daily and annual yields are displayed	Message indicates regular feed-in mode. If irradiation is sufficient, MPP controls are used for feed-in to gain maximum yield.	Is the expected power not fed in? => Check open no-load voltage with multimeter and check PV system if: - DC polarity reversal is present - frequent power limitation due to undersizing - if constant voltage operation is active: check if no-load voltage is less than set constant voltage.	E
8	Self-test in progress	During the self-test before grid feed-in, the following sequence is run through: 1. S8 grid relay self-test 2. S79 ISO measurement 3. S8 filter relay self-test 4. S75 (load DC link) 5. S8 pre-synchronization 6. S4 feed-in	The events from the self-test can indicate the cause on the PV system or device. Observe the last displayed status.	-
10	Temperature in unit too high	The device was switched off due to overheating caused by lack of air circulation.	Were the minimum clearances for installation on the other side observed? => Check information in chapter 6. Was the device accidentally covered? =>Remove object or cool off the area. Is the fan or, if accessible, the heat sink contaminated? => Clean fan & heat sink according to chapter 11.2.	B B E
11		Power limitation: If the generator power is too high, the device limits itself to the maximum power (e.g. around noon if the PV generator capacity is too large).	see Status 8 in Remedy	-
17	"Powador-protect disconnection" or "External grid protection shutdown"	Due to a grid fault (e.g. under/overvoltage or under/overfrequency), a shutdown has been initiated by the higher level grid system protection. Set limit value was exceeded.	> Has the grid plant protection been supplied with power correctly? => Check the “grid parameters” on the grid plant protection. (external device) > Is the cabling routed correctly? => If external grid plant protection is not needed, it must be deactivated in the menu of the device. See chapter 9.4 “Menu structure”.	E
18	Resid. current shutdown	The integrated all-current sensitive residual current circuit breaker has registered an impermissibly high leakage current to PE. Tripped with a jump of 30mA, 60mA & 150mA each with the corresponding shutdown times. The reconnection time is country-specific.	> Was the PE cable routed correctly or does this fault occur frequently when it rains? => Measure the insulation resistance of the system and ground the PE cable correctly, if necessary.	E
20	Power rampup active	Internal power limitation e.g.: “Ramp Up" 10 %/min The result when the power is increased with a ramp is country-specific (after P(f), restart, after grid error, after every connect)	This is required in the country-specific standard.	-
31	RCD module error	A fault has occurred in the all-current sensitive residual current circuit breaker.	N/A	-

EN-US

No.	Result message	Explanation	Remedy	Pers.
33	DC feed-in error	The DC proportion of the feed-in current is outside the permissible limit values.	When this is shown once, the system attempts a recalibration. When this is shown frequently or continuously, contact Service. Note: Because of the country-specific specification (e.g., Italy), the limit values for switching off are very low.	E
34	Internal communication error	A communication error has occurred in the internal data transmission.	If an installation technician is on site, the communication cable between the display board and the AC power unit should be checked for secure fit or a conventional CAT5 cable should be used for the check. Note: A high-temperature-proof cable is prescribed for use in the device. Please contact Service.	E
35	Protection shutdown SW	On account of a measured value that lies outside the permissible range, a shutdown has been performed to protect the device Possible reasons for shutdown: - Grid overvoltage (each phase is monitored) - Intermediate circuit overvoltage - Intermediate circuit asymmetrical - Grid current (each phase is monitored) - internal reference voltage	Does the fault only occur sporadically? How is the device connected on the grid end (heavily inductive grid (on the transformer itself))? -> If the system has its own transformer, the short-circuit voltage of the transformer provides information on the inductance of the grid for the system (4% short-circuit voltage is a very good value). SW from V3.14 also supports 8% and more. => update SW. If the error is present continuously, it can be assumed that there is a device fault -> Contact service department The error can be caused by poor connection/cabling on the AC side. Check all connection terminals from the device through to the grid connection. A fluctuating or missing AC voltage can indicate this connection problem.	K
36	Protection shutdown HW	Group message for all trip zone shutdowns.	Grid-related shutdown of the grid operator. The grid reconnects automatically. Please wait...	-
37	Unknown hardware	No valid version of the power unit was detected.	Restart of the device attempted? (Disconnect AC/DC - switch it back on after 5 minutes.) => If unsuccessful, contact Service.	-
38	Error: Generator Voltage too high Error: Battery overvoltage	The voltage of the PV generators has exceeded the permissible maximum value (limit values, see data sheet).	Are the PV-strings connected in series instead of in parallel? => Check PV voltage with suitable measuring device and check planning and assignment.	E
41	Grid failure undervoltage L1	The limit value is country-dependent. This is a legally required check of the network supplier.	Your solar installer must check the AC voltage at the terminals and AC wiring. If the settings in the menu are also correct, contact Service.	E
42	Grid failure overvoltage L1	See explanation in Status 41	See remedy in Status 41	E
43	Grid failure undervoltage L2	See explanation in Status 41	See remedy in Status 41	E
44	Grid failure overvoltage L2	See explanation in Status 41	See remedy in Status 41	E

No.	Result message	Explanation	Remedy	Pers.
45	Grid failure undervoltage L3	See explanation in Status 41	See remedy in Status 41	E
46	Grid failure overvoltage L3	See explanation in Status 41	See remedy in Status 41	E
47	Grid failure phase-to-phase voltage	The phase angle between the individual phases of the three-phase supply network is not correct, possibly no three phase connection.	Measure the voltages on the device terminal and compare to the country-specific limit as appropriate. Check setting values in the parameters menu. Check the AC fuses: A phase may be missing. This fault can be caused by a poor connection/cabling on the AC side. Check all connection terminals from the inverter through to the grid connection. A fluctuating or missing AC voltage can indicate this connection problem.	B/K
48	Grid failure underfrequency	Measured value for grid frequency lies outside the permitted limit. Limit is country-specific.	Is the country setting correct? => Check setting values in the parameters menu. Your solar installer should check the AC connection and the connection to the device. Otherwise, contact Service.	E
49	Grid failure overfrequency	See explanation in Status 48	See remedy in Status 48	E
50	Grid failure average voltage	The grid voltage measurement according to EN 50160 (10 min. mean value) has exceeded the maximum permitted limit value.	In case of frequent occurrence, check the settings in the menu. > If applicable, was the firmware installed incorrectly? => Unpack firmware according to instructions in the download area.	E
56	SPI Remote shutdown	Remote-controlled shutdown by digital input. (e.g., CEI 0-21)	This was caused by the grid operator.	-
57	Waiting for reactivation	The waiting time following a fault is country-specific and can take several minutes.	Does the message appear frequently? => Find out the reason for the shutdown via error logs, Prolog status	-
58	Control board overtemp.	The temperature inside the device was too high. The device shuts down to avoid hardware damage.	This message only appears at high ambient temperatures (<60°C) > Has the power been checked? => Observe derating temperature according to data sheet > Is the fan or heat sink covered? => Clean device according to chapter 11.2.	E
59	Self-test error	A fault occurred during a self-test.	If the result also appears after a restart, contact Service.	E
60	Generator voltage too high Battery voltage too high	This can occur briefly with designs with high open circuit voltage and very low external temperatures and is a protective function of the device.	Are the PV-strings connected in series instead of in parallel? => Check PV voltage with suitable measuring device and check planning and assignment.	-
61	External limit x%	The grid operator requires an active power reduction. If only reactive power is specified, this message does not appear.	This is a requirement of the grid operator.	-
62	Standalone mode	N/A	N/A	-

EN-US

No.	Result message	Explanation	Remedy	Pers.
63	Frequency-dependent power change	) This requirement is country-dependent. The response can be configured. Normative requirements. No indication on display (behaves in the same way as normal feed-in mode status 4, therefore no flashing "Feed-in" LED). Can be viewed in service log files and via proLOG/portal. When certain country settings are activated, the frequency-dependent power change is activated.	This is a normative requirement.	-
64	Output current limiting	Power limitation because the max. permissible value for the feed-in current per phase has been reached.	That this is a normal safety function of the device due to the grid voltage being too low.	-
70	Fault in fan 1	Failure in the interior fan or the corresponding tacho signal. The power is reduced to 50% Pnom. All 3 LEDs light up on the device.	Is the fan jammed? => Service the fan according to chapter 11. For trained electricians: Are plugs connected correctly? Perform check.	E
71	Fault in fan 2	Failure in the 1st external fan or the corresponding tacho signal. The power is not reduced. This is done by way of temperature curtailment. All 3 LEDs light up on the device.	See remedy in Status 70	E
72	Fault in fan 3	Failure in the 2nd external fan or the corresponding tacho signal. The power is not reduced. This is done by way of temperature curtailment. All 3 LEDs light up on the device.	See remedy in Status 70	E
73	Standalone grid error	Standalone mode was detected.	Device was shutdown in PV system after event. Contact Service.	B
75	Self-test in progress	Self-test sequence is documented in S8.	See remedy in Status 8	-
78	Resid. current shutdown (AFI)	A static residual current causes the device to shut down. The shutdown threshold is determined by the power class and the relevant regulations. For devices in USA/Canada (with UL certification), the device can be reconnected a maximum of 4 times within 24h. F78 therefore stops once the 5th fault is triggered within 24h.	If the fault occurs in the event of precipitation, or high air humidity, this indicates an increased discharge current => check location in the system. Otherwise, contact Service.	E
79	Insulation measurement	Insulation resistance of the system is calculated before connection. More information in Status 19.	Normal device behavior In case of continuous persistence in this status, contact Service.	B
80	Insulation meas. not possible	Not possible to calculate the insulation resistance.	Solar installer to check the PV module installation. => If the message persists, contact Service.	E
81	Protect. shutdown grid volt. L1	Protection shutdown due to an excessively high grid voltage It is the live value which is decisive for the shutdown. As such, a single peak value is enough to cause a shutdown.	Does the message appear frequently? => The solar installer must check the installation and contact Service, if applicable.	E
82	Protect. shutdown grid volt. L2	See explanation in Status 81	See remedy in Status 81	E

EN-US

No.	Result message	Explanation	Remedy	Pers.
83	Protect. shutdown grid volt. L3	See explanation in Status 81	See remedy in Status 81	E
84	Protection shutdown undervolt. DC link	Display when the min/max. value of the intermediate circuit voltage is not reached. If the device stops feeding in, then there is a fault in the device. Otherwise, a highly inductive grid is responsible for this.	Is the location on the Ac-side to the device correct? => Check all connection terminals from the device through to the grid connection. A fluctuating or missing AC voltage can indicate this connection problem. Note: Check the AC-side wiring (transformer inductance capacity) N-conductor is theoretically permitted to have reduced specifications.	E
85	Protect. shutdown overvolt. DC link	See explanation in Status 84	See remedy in Status 84	E
86	Protect. shutdown DC link asymmetry	Protection shutdown due to excessive asymmetry of the two DC link halves	Is the message present after restarting the feed-in? => Contact Service.	E
87	Protection shutdown overcurrent L1	Protection shutdown due to an excessive grid current.	Is the AC wiring correct? => The current measurement may be incorrect. Contact Service.	E
88	Protection shutdown overcurrent L2	See explanation in Status 87	See remedy in Status 87	E
89	Protection shutdown overcurrent L3	See explanation in Status 87	See remedy in Status 87	E
91	Protect. shutdown drop 2.5V	Reference voltage outside the permissible range.	If this occurs repeatedly, contact Service.	-
97	Protection shutdown overcurrent HW	The protection shutdown has tripped due to an overcurrent to the grid. Triggered by a TripZone.	Restart of the device attempted? (Disconnect AC/DC - switch it back on after 5 minutes.) => If unsuccessful, contact Service.	E/K
100	Protect. shutdown HW overheating	See explanation in Status 97	See remedy in Status 97	B E
101	Temperature plausibility error	The individual temperatures in the device are compared with one another. This message appears if a certain limit value is exceeded.	If this occurs repeatedly, contact Service.	K
102	Plausibility fault efficiency	The degree of efficiency of the device must remain within certain limits.	If this occurs repeatedly, contact Service.	K
104	Plausibility fault AFI module	The device has shut down because of implausible internal measured values.	If this occurs repeatedly, contact Service.	K
105	Relay plausibility error	See explanation in Status 104	See remedy in Status 104	K
106	Plausibility error DCDC converter	See explanation in Status 104	See remedy in Status 104	K
107	Check surge protection device	Overvoltage protection device (if present in the device) has tripped and must be replaced. AC, DC & interfaces are monitored for triggered overvoltage protection. All 3 LEDs light up on the device.	Check overvoltage protection in the device. The overvoltage protection module has a corresponding function display. With a red function display, the overvoltage protection module must be checked, and replaced if necessary. The device continues to feed in.	K

EN-US

No.	Result message	Explanation	Remedy	Pers.
108	Grid failure overvoltage L1	Device has detected a fault on one phase and was shut down.	Are the settings in the menu according to the grid voltage correct? => After the check, visually inspect all connection terminals from the device through to the grid connection. A fluctuating or missing AC voltage can indicate this connection problem.	E
109	Grid failure overvoltage L2	See explanation in Status 108	See remedy in Status 108	-
110	Grid failure overvoltage L3	See explanation in Status 108	See remedy in Status 108	-
111	Grid failure undervoltage L1	See explanation in Status 108	See remedy in Status 108	-
112	Grid failure undervoltage L2	See explanation in Status 108	See remedy in Status 108	-
113	Grid failure undervoltage L3	See explanation in Status 108	See remedy in Status 108	-
125	Relay control error	The enable signal for the relay control is read back.	If this occurs repeatedly, contact Service.	K
126	AFI measurement technology error	N/A	N/A	-
127	AC voltage measurement technology error	N/A	N/A	-
128	Internal memory error 1	Write or read access fault to the internal RAM.	Restart of the device attempted? (Disconnect AC/DC - switch it back on after 5 minutes.) => If unsuccessful, contact Service.	B
129	Power reduction P(U)	Message present if the function P(U) sets the power level according to the specified parameters subject to the AC voltage.	This function can be requested by the grid operator, for example. If a request is not present, the function can be deactivated.	B
148	Error external memory 1	The device has internal permanent memories to store the hardware that is used, for example. The parameters for the operation are derived from there.	Restart of the device attempted? (Disconnect AC/DC - switch it back on after 5 minutes.) => If unsuccessful, contact Service.	B
150	Protect. shutdown drop 1.65V	Internal protection function to maintain the required measuring accuracy.	Restart of the device attempted? (Disconnect AC/DC - switch it back on after 5 minutes.) => If unsuccessful, contact Service.	B
158	Power limitation	Power limitation because the internal temperature is too high. The temperature is measured on the control board. This is a protective function of the device.	Check if the device is cooled: Heat sink clean and installation instructions observed according to the manual (distances)?	-
159	Waiting for configuration	The DSP is waiting for configuration data from the HMI.	The configuration of the device via the web user interface must be completely finished.	B
160	Error: Grid relay L1	The self-test detected a fault for the grid-side relay.	If this occurs repeatedly, contact Service.	-
161	Error: Grid relay L2	See explanation in Status 160	See remedy in Status 160	-
162	Error: Grid relay L3	See explanation in Status 160	See remedy in Status 160	-
163	Error: Grid relay N	N/A	N/A	-
164	Error: Filter relay L1	The self-test detected a fault for the relay in the device.	If this occurs repeatedly, contact Service.	-

EN-US

No.	Result message	Explanation	Remedy	Pers.
165	Error: Filter relay L2	See explanation in Status 164	See remedy in Status 164	-
166	Error: Filter relay L3	See explanation in Status 164	See remedy in Status 164	-
167	Error: Filter relay N	See explanation in Status 164	See remedy in Status 164	-
169	Error: AFI sensor	The AFI sensor is demagnetized prior to infeed. If this is not possible, this message appears	If this occurs repeatedly, contact Service.	-
170	Check overvoltage protection on DC-side	N/A	N/A	-
171	Check overvoltage protection on AC-side	N/A	N/A	-
172	Internal fan error	Failure of an interior fan or the corresponding tacho signal. The power is reduced to 50% Pnom. All 3 LEDs light up on the device.	Is the fan jammed? => If applicable, clean according to chapter “Maintenance”. For trained electricians: Are plugs connected correctly?	-
173	External fan error	Failure of an external fan or the corresponding tacho signal. The power is reduced to 50% Pnom. All 3 LEDs light up on the device.	See remedy in Status 172	-
180	Pre-synchronization not possible	Adequate voltage pre-synchronization with the AC grid not possible.	Restart of the device attempted? (Disconnect AC/DC - switch it back on after 5 minutes.) => If unsuccessful, contact Service.	B
181	Insulation error, center	The insulation error is located close to the center of a PV string. The area covers +-15% of the half of the modules based on the total number of modules.	Is the insulation correct? => Check the insulation resistance of the system. Note: Insulation error messages following the update to V4.xy indicate insulation errors in the PV system, which were not previously detected. They must be rectified in order to operate the PV system safely.	E
182	Insulation error, minus	The insulation error is located between the center of a string and the minus terminal on the inverter. If the insulation error is located very close to the minus inverter terminal, then the error occurs even if the insulation error <150 kOhm and is above the set value.	See remedy in Status 181	-
183	Insulation error, plus	The insulation error is located between the center of a string and the plus terminal on the inverter. If the insulation error is located very close to the plus inverter terminal, then the error occurs even if the insulation error is less than 150 kOhm and is above the set value.	See remedy in Status 181	-
184	Protect. shutdown overcurrent L1 int.	Protection shutdown due to an excessively high grid current in the interleaved path (channel B) on phase Lx It is the live value which is decisive for the shutdown.	Restart of the device attempted? (Disconnect AC/DC - switch it back on after 5 minutes.) => If unsuccessful, contact Service.	-
185	Protect. shutdown overcurrent L2 int.	See explanation in Status 184	See remedy in Status 184	-
186	Protect. shutdown overcurrent L3 int.	See explanation in Status 184	See remedy in Status 184	-

EN-US

No.	Result message	Explanation	Remedy	Pers.
187	Fault in fan 4	Failure in the 3rd external fan or the corresponding tacho signal. The power is not reduced. This is done by way of temperature curtailment. All 3 LEDs light up on the device.	Is the fan jammed? For trained electricians: Are plugs connected correctly?	E
188	Semiconductor test not possible	The measurement or actuation of the semiconductors failed. If applicable, the integrated AC filter can no longer be discharged below 50 V.	Make sure there is no grounding problem. Disconnect the device on the AC and DC side. Observe the wait time on the warning sign. Switch the device on again. If this message is displayed again, contact Service.	B
189	Semiconductor module 1 in channel A defective	Semiconductor module x in channel A is defective or the corresponding filter relay does not close correctly.	Restart of the device attempted? (Disconnect AC/DC - switch it back on after 5 minutes.) => If unsuccessful, contact Service.	B
190	Semiconductor module 2 in channel A defective	See explanation in Status 189	See remedy in Status 189	-
191	Semiconductor module 3 in channel A defective	See explanation in Status 189	See remedy in Status 189	-
192	Semiconductor module 1 in channel B defective	Semiconductor module x in channel B is defective or the corresponding filter relay does not close correctly.	Restart of the device attempted? (Disconnect AC/DC - switch it back on after 5 minutes.) => If unsuccessful, contact Service.	-
193	Semiconductor module 2 in channel B defective	See explanation in Status 191	See remedy in Status 191	-
194	Semiconductor module 3 in channel B defective	See explanation in Status 191	See remedy in Status 191	-
195	DESAT failure	The DESAT of the IGBTs has tripped or the power supply (24 V) of the gate drivers is too low.	If this occurs repeatedly, contact Service.	-
203	Protect. shutdown grid volt. L1	Protective shutdown due to an excessively high grid voltage. It is the effective value which is decisive for the shutdown procedure.	Is the error displayed frequently? =>Check the installation again. Otherwise, contact Service. Note: Error can be caused by a poor location on the AC side. Check all connection terminals from the inverter through to the grid connection. A fluctuating or missing AC voltage can indicate this connection problem.	E
204	Protect. shutdown grid volt. L2	See explanation in Status 203	See remedy in Status 203	-
205	Protect. shutdown grid volt. L3	See explanation in Status 203	See remedy in Status 203	-
206	Protection shutdown overcurrent HW	AC overvoltage trip-off that was triggered by a hardware comparator.	If this occurs repeatedly, contact Service.	-
207	Detection of hardware detection failed: Control board	The data saved on the control card is erroneous.	Restart of the device attempted? (Disconnect AC/DC - switch it back on after 5 minutes.) => If unsuccessful, contact Service.	B

EN-US

No.	Result message	Explanation	Remedy	Pers.
208	Detection of hardware detection failed: AC power board	The data saved on the AC power board is erroneous.	See remedy in Status 207	B
209	Detection of hardware detection failed: AC relay board	The data saved on the AC relay board is erroneous.	See remedy in Status 207	B
216	Protect. shutdown HW - overvoltage DC link halves	One of the two DC link halves has exceeded the maximum value. Shutdown occurs by way of HW-detection and TripZone shutdown.	Restart of the device attempted? (Disconnect AC/DC - switch it back on after 5 minutes.) => If unsuccessful, contact Service.	B
217	Protect. shutdown HW - 24V supply voltage	The supply voltage in the device has exceeded its max. permitted value. Shutdown occurs by way of HW-detection and TripZone shutdown.	Restart of the device attempted? (Disconnect AC/DC - switch it back on after 5 minutes.) => If unsuccessful, contact Service.	B
224	External limitation	This is a relative specification of the desired active power adjustment.	N/A	-
225	Battery voltage too low	N/A	N/A	-
226	Inverter is manually disconnected from the grid	The device can be disconnected from the grid manually after logging in via the web user interface. This message then appears.	Activate the grid connection via the icon on the web user interface.	B
227	Protective shutdown current asymmetry	Protective shutdown that enables safe shutdown of the device in the event of (high-ohm) grid failures. Grid events can cause asymmetrical currents in the inverter. They are detected and shut down accordingly.	If this occurs repeatedly, contact Service.	-
228	Protective shutdown voltage asymmetry	Protective shutdown that enables safe shutdown of the device in the event of (high-ohm) grid failures. Grid events can cause asymmetrical voltages in the inverter. They are detected and shut down accordingly.	See remedy in Status 227	-
230	AC voltage limitation	This is a protective function of the device that allows it to be switched off quickly in case of incidents or switching operations at the medium voltage level.	Normative requirement of the grid operator	-
231	External active power value	External specification of a setpoint value for the fed-in active power. The fed-in active power can be increased or decreased with the grid support procedure. Grid support procedures thereby have a higher priority.	Normative requirement of the grid operator	-

NOTE

Event number not found?

Event numbers that are displayed in the device and not listed here generally require a service call by your installation partner.

EN-US

NOTE

If an event occurs irregularly, our service technician needs to have the service package stored on the device. You must download and send this under the menu item “Service” – “Export Service Package” See table : Configuration via web user interface [Page 75]

EN-US

12 Decommissioning and removal

12.1 Switching off the device



⚠ DANGER

Lethal voltages are still present in the connections and cables of the device even after the device has been switched off and disconnected!

Severe injuries or death may occur if the cables and/or terminals/busbars in the device are touched.

1. Observe all safety regulations and current technical connection specifications of the responsible power supply company.
2. The device may only be opened and serviced by an authorized electrician.
3. Switch off the grid voltage by turning off the external circuit breakers.
4. Do not touch the cables and/or terminals/busbars when switching the device on and off.
5. Keep the device closed when it is in operation.



⚠ WARNING

Risk of burns from hot housing components

Housing components could heat up during operation.

1. Only touch the housing cover of the device during operation.

12.2 Disconnecting the connections

12.2.1 AC connection

↻ It has been ensured that there is no AC/DC voltage present.

↻ Remove the housing cover and put it aside.

1. Detach cables (L1/L2/L3) from the AC connection terminal [🔧W_17].
2. Detach the PE line from the earthing bolt [🔧W_17].
3. Unfasten the cable fitting and remove the cables through the cable fitting [🔧W_46].

. **NOTE: If the AC cable does not fit through the cable fitting due to the size of the cable lug, then the AC cable must be severed at the cable lug.**

4. Place protective caps on the ends of the AC cables.

12.2.2 DC connection

↻ Ensure that the device is completely free of DC voltage.

↻ Housing cover removed and set to one side.

1. Detach the line ends from the PV generator at the DC+ and DC- busbar [🔧W_17].
2. Place the fastening elements back in the fittings bag.
3. Loosen the cable fitting and pull the DC cable through the cable fitting [🔧W_46].

. **NOTE: If the DC cable does not fit through the cable fitting due to the size of the cable lug, then the DC cable must be severed at the cable lug.**

4. Place protective caps on the ends of the DC cables.

EN-US

12.3 Uninstalling the device



⚠ DANGER

Dangerous voltage due to two operating voltages

Severe injuries or death may occur if the cables and/or terminals/busbars in the device are touched. The discharge time of the capacitors is up to 5 minutes.



1. Only appropriately qualified electricians authorized by the mains supply network operator are permitted to open and maintain the device.
2. Before opening the device: Disconnect the AC and DC side and wait at least 5 minutes.

↻ The device is switched off and a check has been performed to ensure that it is de-energized.

↻ AC cable disconnected [See section 12.2.1 Page 118].

↻ DC connection disconnected [See section 12.2.2 Page 118].

1. Undo the cable fitting for Ethernet cables [W_29].
2. Undo the cable fitting for RS485 cables [W_20].
3. Disconnect the plug from the communication circuit board.
4. Pull the interface cables out of the device.
5. Insert sealing plugs into all open cable fittings.

⇨ The device has been uninstalled. Proceed with removal.

12.4 Removing the device

↻ Device has been switched off and uninstalled.

1. Remove the screw that prevents the device from being lifted off the mount.
2. Use the lateral openings and lift the device off the mount.

⇨ The device has been removed. Proceed with packaging.

12.5 Packaging the device

↻ The device has been uninstalled.

1. If possible, always pack the device in the original packaging. If this is no longer available, an alternative is to use equivalent packaging.
2. You must be able to close the box completely and it must be able to accommodate the weight and size of the device.

12.6 Storing the device



NOTE

Damage to property due to condensation build-up

If the device is stored incorrectly, condensation may build up within the device and impair the functionality of the device (e.g. due to storage that does not conform to the specified environmental conditions or if the device is transported from a cold environment to a warm environment for a brief period of time.

1. Check the interior space for any condensation water prior to electrical installation and, if necessary, allow it to dry out sufficiently.
2. Storage in accordance with the technical data > Environmental data

↻ The device is packaged.

☞ Store the device in a dry place, in accordance with the ambient temperature range Environmental data.

EN-US

13 Disposal



⚠ CAUTION

Risk to the environment if disposal is not carried out in the correct manner

For the most part, both the device and the corresponding transport packaging are made from recyclable raw materials.

Device: Do not dispose of faulty devices or accessories together with household waste. Ensure that the old device and any accessories are disposed of in a proper manner.

Packaging: Ensure that the transport packaging is disposed of properly.

EN-US

14 Service and warranty

If you need help solving a technical problem with one of our KACO products, please contact our service hotline.

Please have the following information ready so that we can help you quickly and efficiently:

- Device name / serial number
- Date of installation / Start-up report
- Fault message indicated by status LEDs / Description of the fault / Did you notice anything unusual? / What has already been done to analyze the fault?
- Module type and string circuit
- Consignment identification / Delivery address / Contact person (with telephone number)
- Information about the accessibility of the installation site

You can find the following items and other information at our website Kaco-newenergy

- our current warranty conditions
- a complaint form
- a form for registering your device. Please register your device without delay. In this manner, you can assist us in providing you with the quickest service possible.

NOTE

The maximum length of the warranty is based on the currently applicable national warranty conditions.



The text and figures reflect the current technical state at the time of printing. Subject to technical changes. No liability for printing errors.

KACO new energy.



4040 Binz-Engleman · San Antonio · TX U.S.A · Tel. 800 7132 896 1000 · service.pv.us@siemens.com · www.siemens.com/pvebop