Conergy WR 1700-5900E



Instruction Manual

Dear Reader

Introduction

Thank you for placing confidence in us - and congratulations on your new, technically high-grade product! This instruction manual will help you get to know your new machine. Read the manual carefully and you will soon be familiar with all the many great features of your new product. This really is the best way to get the most out of all the advantages that your machine has to offer.

Please also take special note of the safety rules - and observe them! In this way, you will help to ensure more safety at your product location. And of course, if you treat your product carefully, this definitely helps to prolong its enduring quality and reliability - things which are both essential prerequisites for getting outstanding results.

Safety rules

Danger!

"Danger!" indicates an imminently hazardous situation which, if not avoided, will result in death or serious injury. This signal word must be limited to the most extreme situations. This signal word is not used for hazards relating to property damage unless there is also a risk of personal injury appropriate to this level.

Warning!

"Warning!" indicates a potentially hazardous situation which, if not avoided, could result in death or serious injury. This signal word is not used for hazards relating to property damage unless there is also a risk of personal injury appropriate to this level.

Caution!

"Caution!" indicates a potentially hazardous situation which, if not avoided, may result in minor or moderate injury. It may also be used to draw attention to unsafe practices that may cause damage to property.

Note!

"Note!" indicates a situation which implies a risk of impaired welding results and damage to the equipment.

Important!

"Important!" indicates practical hints and other particularly useful information. It is not a signal word for a harmful or dangerous situation.

Whenever you see any of the symbols shown above, you must pay even closer attention to the contents of the manual!

General Remarks



This equipment has been manufactured in accordance with the state of the art and general safety-engineering principles. Nevertheless, incorrect operation or misuse may still endanger

- the life and well-being of the operator or of third parties,
- the equipment and other tangible assets belonging to the owner/operator,
- working efficiently with the equipment.

All persons involved in any way with starting up, servicing and maintaining the equipment must

- be suitably qualified
- have good knowledge of dealing with electrical installations and
- read this instruction manual thoroughly and follow the instructions to the letter.

The instruction manual must be kept at the machine location at all times. In addition to the instruction manual, it is important to comply with both the generally applicable and local accident prevention and environmental protection regulations.

General Remarks
(continued)

All the safety instructions and warning signs on the machine itself:
- must be kept in a legible condition
- must not be damaged
- must not be removed
- must not be covered, pasted or painted over

For information about where the safety instructions and warning signs are located on the machine, please refer to the section of your machine's instruction manual headed "General Remarks".

Any malfunctions which might impair machine safety must be remedied immediately - meaning before the equipment is next switched on.

Your safety is at stake!

Utilisation for Intended Purpose Only



The machine may only be used for jobs as defined by the "intended purpose".

Utilisation for any other purpose, or in any other manner, shall be deemed "not in accordance with the intended purpose". The manufacturer shall not be liable for any damage resulting from such improper use.

Utilisation in accordance with the "intended purpose" also comprises
- thorough reading of and compliance with all the instructions, safety instructions and warnings given in this manual
- performing all stipulated inspection and servicing work
- installation in accordance with the instruction manual

Where appropriate, the following guidelines should also be applied:
- regulations of the power supply company for input to the grid
- information provided by the manufacturer of the solar modules

Ambient Conditions



Operation or storage of the machine outside the stipulated range is deemed "not in accordance with the intended use". The manufacturer shall not be liable for any damage resulting therefrom.

Please refer to the technical data in your instruction manual for accurate information about the permissible ambient conditions.

Qualified Staff



The servicing information provided in this instruction manual is only intended for qualified staff. An electric shock can be fatal. Please do not carry out any activities other than those referred to in the documentation. This also applies even if you are suitably qualified.



All cables and other leads must be firmly attached, undamaged, properly insulated and adequately dimensioned. Have loose connections, scorched, damaged or under-dimensioned cables and wires repaired immediately by an authorised specialist company.

Qualified Staff
(continued)



Maintenance and repair may only be carried out by an authorised specialist company.

There is no guarantee in the case of parts sourced from other suppliers that these parts have been designed and manufactured to cope with the stresses and safety requirements that will be placed on them. Use only original spare parts (this also applies to standard parts).

Do not carry out any alterations, installations or modifications to the machine without first getting the manufacturer's permission.

Replace immediately any components that are not in perfect condition.

Safety Precautions at the Machine Location

Ensure when installing machines with cooling-air vents that the cooling air can flow freely through the air vents without obstruction. Only operate the machine with the degree of protection specified on the rating plate.

EMC Precautions



Care must be taken during installation to ensure that there is no occurrence of electromagnetic interference with electrical and electronic equipment.

Electrical Installations



Electrical installations may only be executed in accordance with the relevant national and regional standards and specifications.

ESD Protective Measures



Danger of damage to electronic components due to electrostatic discharge. Take appropriate protective measures when replacing and installing the components.

Safety Precautions in Normal Operation



Only operate the machine if all its protective features are fully functional. If any of the protective features are not fully functional, there is a danger to:
- the life and well-being of the operator or other persons
- the equipment and other tangible assets belonging to the owner/operator
- working efficiently with the equipment.

Have any safety features that are not fully functional repaired by an authorised specialist company before switching the machine on again.

Never bypass or disable safety features.

Safety markings

Equipment with the CE mark fulfils the basic requirements of the Guideline Governing Low-Voltage and Electromagnetic Compatibility. (More detailed information about this may be found in the Annex or in the section of your documentation headed “Technical Data”.)

Data security

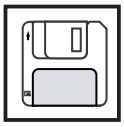

The user is responsible for backing up data relating to changes made to factory settings. The manufacturer will not accept liability if personal settings are deleted.

Copyright



Copyright to this instruction manual remains the property of the manufacturer.

The text and illustrations are all technically correct at the time of going to print. The right to make modifications is reserved. The contents of the instruction manual shall not provide the basis for any claims whatever on the part of the purchaser. We should be most grateful for your comments if you have any suggestions for improvement, or can point out to us any mistakes which you may have found in the manual.

Table of Contents

Safety of persons 4
Safety 4
Housing unit 4
Galvanic insulation 4
Monitoring the electrical mains network 4
Photovoltaic generator 5
Mains connection 5
DC plugs 5
AC plugs 5

The Safety Concept 6
Standards and Regulations 6
Conformity Declaration 6

How a photovoltaic system works 7
General information 7
Your roof is your power generator 7

General Introduction 7
Electricity is converted under the roof 8

The Conergy WR unit in the Photovoltaic System 9
General information 9
Transforming DC into AC electricity 9
Fully automatic operation management 9
Voltage transformation and galvanic insulation 9
Monitoring the mains network 10
Display function and data communication 10
Your advantage 11

Product description 12

The Conergy WR Unit 12
How it functions 12
Startup phase 12
Overview for Conergy WR 14
LED for operating status 15

Operating scheme 17

The Display 17
General information 17
Functions of the keys 17
Symbols 17

Navigating in the Display 18
Display illumination 18
Menu level 19
Select display mode 19
Scrolling between display functions 20

Display Modes 20
Scheme of display modes 20
Scheme of display readings 21
Display mode „Now“ 22
Display mode „Day / Year / Total“ 25
The Setup Menu 28
List of menu items 28
Display mode „Setup“ 29
Enter the setup menu 29
Scroll among menu items 29
Setting the menu items 30
Additional information 39
Upgrading the system 39
Forced ventilation 40
Installation manual 41
Open the housing 42
Conergy WR 42
Installation 43
Choosing the location general 43
Choosing the location 43
Fixing the wall mounting frame 44
Connection 46
Connection to the Solar Modules and to the Public Mains 46
Solar modules 46
Mains network monitoring 46
Schemes with more than one inverter 46
Connection alternatives 47
1. Terminal block 47
2. DC plug 48
3. DC plug and AC connection 49
Start up Operation 51
Configuring your Inverter 51
Factory pre-set configuration 51
Your personal configuration 52
LocalNet 52
System upgrading / slot-in board system 52
Data recorder 52
COM Card 52
Insert slot-in boards, Conergy WR 53
Configuration 54
Example 54
Status diagnosis and repair 55

Service-Codes Displayed 55
Service display 55
General service codes 55
Complete failure 56
Conergy WR with several power stage sets 56
Class 1 57
Class 2 58
Class 3 59
Class 4 60
Class 5 62
Class 5 63
(continued) 63
Customer service 63

Annex 64

Technical Data 64
Conergy WR 1700 / 2300 / 3300 64
Conergy WR 4600 / 5900 / 5900E 65

Warranty and Liability 67
Warranty terms and liability 67
Scope of warranty 67
Warranty period 68
Warranty evidence 68

Disposal of obsolete equipment 68
Recycling 68

Declarations of Conformity 69

Safety of persons

Safety

Warning! Incorrect operation and work performed incorrectly can cause serious injury & damage! Only qualified staff are authorized to put your Conergy WR unit into operation and only within the scope of the respective technical regulations. Do not start operation or carry out maintenance works before you have read the chapter „Safety Conditions“!

Housing unit

Only qualified installers are authorized to open the connection area.

Opening the connection area is only permitted when it is not under voltage.

The separately insulation encased power stage shall only be opened when not under voltage and only by trained service staff.

Galvanic insulation

The design and function of the Conergy WR unit offer a maximum of safety, both during installation as well as in operation. A complete galvanic insulation between DC and AC side guarantees maximum safety.

The Conergy WR takes over the tasks of galvanic insulation and network monitoring. The passive and active measures for the protection of persons and equipment are understood by this.

Monitoring the electrical mains network

Whenever conditions in the electric mains network are inconsistent with standard conditions (for example mains switch-off, interruption), your Conergy WR unit will immediately stop operating and interrupt the supply of power into the mains.

Your Conergy WR unit can monitor the situation in the mains in several ways, by

- monitoring voltage
- monitoring cycle frequency
- ENS (optional)

The ENS option is compulsory in only a few countries, and only for them the Conergy WR unit is available with this option. In any case however will the monitoring and safety systems integrated in the Conergy WR unit be available as standard equipment.

Monitoring the electric mains network (continued)

The permanent ENS mains monitoring scheme is an additional link in its safety chain. One of the signs by which ENS identifies abnormal situations in the mains is a sudden increase of the impedance in the mains network.

Both the permanent mains monitoring by your Conergy WR unit directly as well as ENS make sure that in case of a mains blackout (due to being switched off by the utility company or due to a defect in the transmission line) it stops feeding power into the mains.

This scheme definitely prevents dangerous voltages at the AC lines and constitutes an essential contribution towards avoiding hazards for the maintenance staff.

Photovoltaic generator

Before connecting the solar modules, you must check whether the voltage parameters laid down in the manufacturer's data correspond with reality.

When checking the voltage reading, please take into account that solar modules supply a higher no-load voltage when temperatures are low and insolation remains unchanged.

At an outside temperature of -10 degrees centigrade the no-load voltage of the solar modules must in no case exceed 500 V - or 530 V for the WR 5900E. The data sheet of the solar module will tell you the temperature factors applicable for ascertaining the theoretical no-load voltage at -10 degrees centigrade.

In case the solar modules exceed a no-load voltage of 500 V - or 530 V for the WR 5900E - the Conergy WR unit will be completely damaged and all warranty rights will cease to exist.

Mains connection

Only a licenced electricity installer is authorized to carry out the connection works to the public mains network.

DC plugs



Note! If DC plugs are provided, they must never be disconnected from the sockets of the solar modules as long as the Conergy WR unit is feeding power into the mains. Before disconnecting the DC plug you must always disconnect in the fuse for the house distribution.

AC plugs



Note! Disconnect AC plug connections only when the equipment is not under voltage, after having disconnected the fuse for the in-house distribution panel.

The Safety Concept

Standards and Regulations

Your Conergy WR unit complies with all applicable standards and regulations.

They comprise in particular:

- Guideline 89/336/EEC electromagnetic compatibility
- Guideline 93/68/EEC CE-marking
- European standards EN 50 081-1, EN 50 082-2, EN 61 000-3-2
- „Guideline for parallel operation of self-owned photovoltaic generating systems with the low voltage mains network of the utility supply company“, issued by the Association of German Electric Utility Supply Companies (VDEW)
- „Technical Guidelines for parallel operation of self-owned photovoltaic generating systems with the low voltage mains network of the utility supply company“, issued by the Association of Electric Utility Supply Companies of Austria
- „Safety requirements for photovoltaic energy generation plants“ (ÖNORM/ÖVE E2750), to the extent that these regulations are applicable for the inverter.

Conformity Declaration

The respective conformity declarations you will find in the appendix to these operating instructions.

General Introduction

How a photovoltaic system works

General information

The energy from worldwide insolation amounts to a total of about 1,540,000,000,000,000,000 kWh/year (1,540 Peta kWh/year). This is 15.000 times as much as the electricity consumption worldwide. We congratulate you on your decision to actively use world's biggest energy pool. By the way, it was a scientist in the field of of physics, Alexandre-Edmond Bequerel, who first discovered the photo-voltaic effect in 1839. The name photo-voltaic comes from the driving force behind this technology, which is the ray of light. The ray of light consists of unimaginably tiny particles, the photons.

Your roof is your power generator

Let us simply start our explanation with a straight silicon solar cell. Remembering our physics class in school, we know that there are four electrons in the outside electron shell of a silicon atom arranged around its atomic nucleus, they are the so-called peripheral valency electrons. The sunlight's photons enter the solar cells and concentrate energy in the valency electrons. The electron eventually separates from the silicon atom and leaves behind it an atom with a positive charge.

So that the free electrons will flow in one direction and thus generate electricity, the poles on the front and back side of the cell must be different from each other.

The silicon atoms of the front must be packed with a slight quantity of phosphor atoms which contain an additional valency electron. On the back of the cell, atoms of boron having only three valency electrons are added to the silicon atoms.

The result is an imbalance which makes the electrons flow, and this is how electric power is generated.

Many such solar cells united together and packed behind glass form one of your solar modules.

Your roof is your power generator (continued)

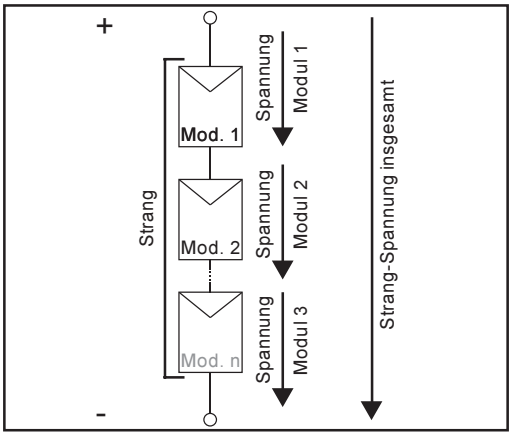

Power output and voltage are increased by combining a number of solar cells. If solar modules are connected in series like on a string, both the output potential as well as the voltage will increase.

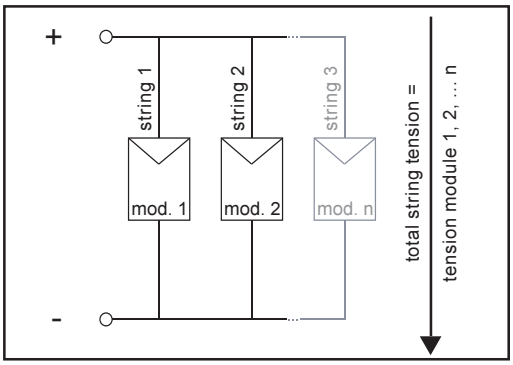

In a parallel connection of several such strings the potential output and the modular electric power will increase, while the voltage will remain unchanged. The total of all solar modules connected parallel and in series is called solar generator.

Electricity is converted under the roof

The direct current generated in the solar modules can be fed into the public mains network or put to home use after having been transformed in an inverter.
This is the basic purpose of your Conergy WR unit.

The Conergy WR unit in the Photovoltaic System

General information

Your Conergy WR unit is the latest generation of solar inverters. It is the highly complex link between solar modules and the public electricity mains network.

As such it is in charge of a number of highly qualified tasks.

Transforming DC into AC electricity

The Conergy WR unit transforms the direct current generated by the solar modules into alternating current. This alternating current is fed into your home system or into the public mains synchronically with the voltage which is used there. The Conergy WR has been designed exclusively for use in mains connected photovoltaic schemes. It cannot generate electric power independent from the public mains network.

Fully automatic operation management

The operation of the Conergy WR unit is fully automatic. Starting with sunrise, as soon as the solar modules generate enough power, the automatic control unit starts monitoring voltage and frequency. As soon as there is a sufficient level of insolation, your solar inverter starts supplying and feeding power. A few Watts of solar power output are sufficient to achieve this, depending on which version the unit is!

The operation of the Conergy WR unit ensures that at any time the maximum possible power output is drawn from the solar modules.

This function is called MPPT (Maximum Power Point Tracking). It operates with extremely high precision. As dusk starts there is no more sufficient energy available to feed power into the mains, the Conergy WR unit shuts the mains connection completely and stops operating. All settings and data recorded are of course saved.

Voltage transformation and galvanic insulation

The Conergy WR has been designed for use with solar modules of a wide range of input voltages. This allows the use of the greatest variety of types of solar modules. Important notice: the parameters indicated for maximum DC voltage (total voltage of the solar cells connected) must at no time be exceeded!

By its design and operation, the Conergy WR offers a maximum of safety during installation as well as in operation.

Voltage transformation and galvanic insulation (continued)

The Conergy WR is equipped with an HF-transformer (HF = high frequency) which assures a galvanic insulation between the DC side and the mains. In addition, the HF principle results in a drastic reduction of the transformer's size, which means that it requires less space and has considerably less weight. In spite of its full galvanic insulation, the Conergy WR unit achieves a high degree of efficiency, due to its innovative circuit schemes.

Monitoring the mains network

The Conergy WR unit is in charge of monitoring the mains network. This responsibility comprises all measures necessary for the protection of persons and machines in case of a power blackout.

The Conergy WR unit is programmed to stop operation immediately and stop supplying power whenever conditions in the mains network deviate from standard (for example when power is switched off or in case of any other kind of interruption).

There are several ways how the Conergy WR unit can identify a mains-cutoff, it can do so for example by monitoring:
- voltage
- frequency
- resistance (only Conergy WR with ENS)

For this purpose it is important that the specific monitoring procedures applicable for the respective countries are carried out directly by the Conergy WR unit without the use of additional electronic monitoring devices. This will result in a substantial reduction of the installation work and cost.

Display function and data communication

The complex technical systems of innovative solar inverters make it necessary to design the display which is the interface with the user very carefully. It is an unwavering design aiming at ease of operation and permanent availability of the system's data.

The Conergy WR unit is equipped with a basic recording function for monitoring minimum and maximum data on a daily and a cumulative basis directly from the display. There is also an option to allow the reading of the following weather data on the display:
- two different temperature readings (for example temperature at the solar modules as well as the outside temperature in the shade)
- insolation

In addition to the functions installed in the Conergy WR unit, a wide choice of elements offered for data communication allows for many possibilities of recording and visualising data. The respective components required to upgrade the system are easy to install using the IG DatCom operating instructions. The installation of system upgrades, such as DatCom components, allows for possible remote system monitoring via modem, text messages to mobile phones in the event of faults, data visualisation and data comparison on the PC.

Your advantage

With each additional task, as described above and controlled directly by the inverter, installation becomes easier and less costly because no additional peripheral equipment will be required. Based on our experience and the use of the most innovative technologies, the Conergy WR unit is able to manage all these tasks simultaneously.

In addition, the Conergy WR unit complies with a whole number of requirements established for the safety of people and other household appliances, as well for its own safety.

Some of these requirements are:
- ability to monitor the mains network
- the quality of the electricity supplied
- detection of outside disturbance and interference (for example mobile telephones).

Annexed you will find the respective certificates.

Product description

The Conergy WR Unit

How it functions

The Conergy WR unit is designed for fully automatic operation. Basically no personal control is necessary for feeding the power it generates into the mains network.

The Conergy WR unit starts operating automatically as soon as the solar modules produce sufficient power output after sunrise. From this point onwards, you will also receive system information from the Conergy WR graphic display.

During its operation the Conergy WR unit maintains the voltage of the solar modules at any time within the range of optimal power withdrawal.
- the optimal voltage for any particular status of operation of the solar modules is called MPP voltage (MPP = maximum power point)
- exactly maintaining the MPP voltage guarantees an optimal level of the efficiency factor of your solar modules at any time (MPP-tracking).

As soon as dusk begins there is no more sufficient energy available to feed into the mains network, the Conergy WR unit fully shuts off the mains connection.
- during the night the Conergy WR unit does not draw any energy from the public mains
- the data and parameters set remain available
- it is also possible to shut the unit off manually

Startup phase

After having switched on automatically, the Conergy WR unit goes through a self-test, and after that through a test of the public mains network.

This test takes between only few seconds up to several minutes, depending on the regulations in your country. During startup the LED illumination is yellow.

(1) **Segment test**
- all display elements light up for about one second

(2) **TEST**
- self test of important components of the Conergy WR unit
- The Conergy WR unit goes through a master check list for a period of only a few seconds
- the display says „TEST“ and indicates the respective component which is being tested (for example „LED“)

Startup phase
(continued)



(3) **Synchronisation with mains**
- The screen displays „SYNC$_{AC}$“
- „WAIT$_{PS}$“ is displayed: The Conergy WR is waiting for all power supplies in the network to be on stand-by. This procedure takes place dependent on the DC-voltage.



- „SYNC$_{AC}$“ is displayed subsequently.



(4) **Startup test**
- Before the Conergy WR unit starts supplying power into the mains, the conditions of the mains network are tested in detail in accordance with the regulations of your country.
- the screen displays „START$_{UP}$“

Depending on the regulations of each country, the startup test can take between just a few seconds up to several minutes. The time elapsed is indicated by a bar shrinking from top down.

Whenever two scale divisions stop flashing and disappear, 1/10 of the total duration of the test is over

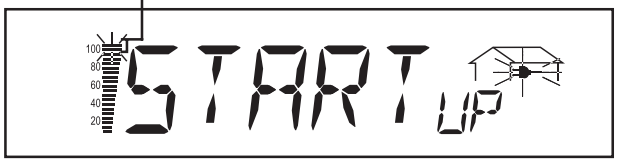

(5) **Synchronisation ENS (option)**
- if the Conergy WR unit is equipped with the ENS option, every detail of the ENS will be tested and synchronized
- the screen displays „SYNC$_{ENS}$“

Depending on the operating status of the ENS, test and synchronization may take up to several seconds.



(6) **Operation of feeding power supply into the mains network**
- After termination of the tests, the Conergy WR unit starts feeding power into the mains network.
- The LED lights up green, and the Conergy WR unit starts operating

Overview for Conergy WR

(1) storage area for operation and installation manual

(2) ventilation grill

(3) LED for operation status

(4) display

(5) keyboard

(6) slot -in board area

(7) various versions of connection plate

(8) connection area - to be opened only by licensed electricity installers

(9) power stage, separately insulation encased - to be opened only by trained service staff

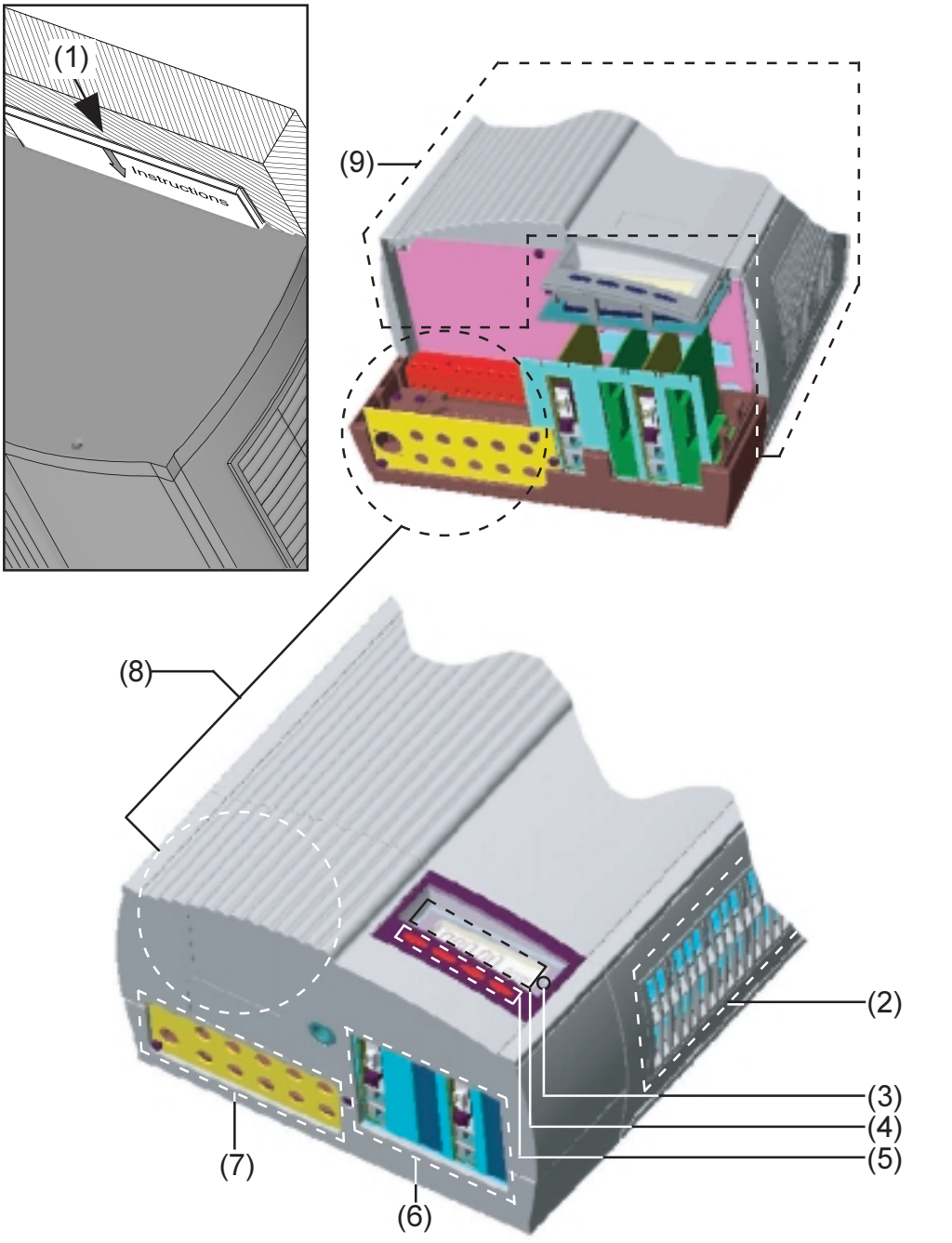

LED for operating status

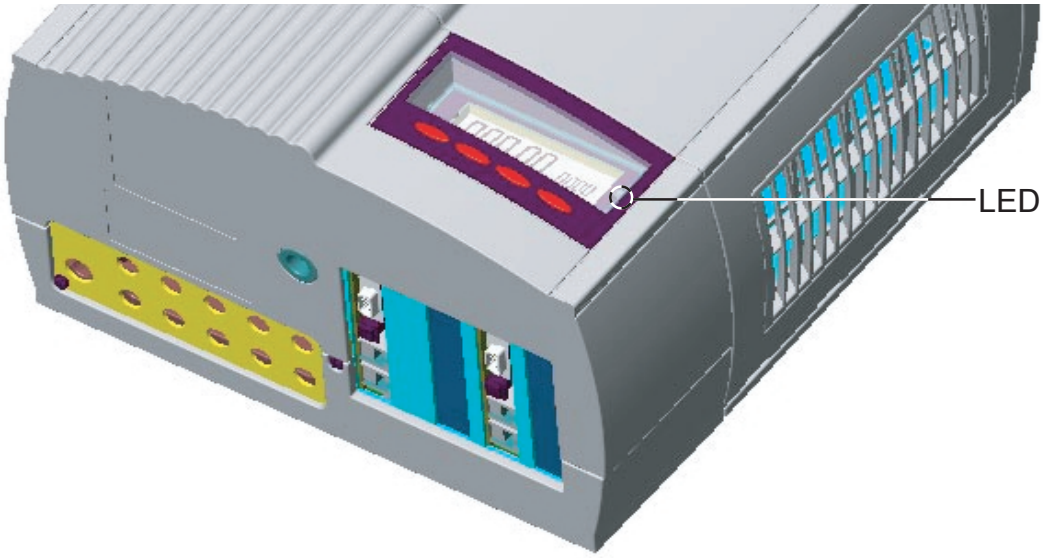

Depending on the operating status, the LED assumes different colours

(1) **LED lights up green:**
- a green light starts as soon as the Conergy WR unit has completed the startup phase, it stays green as long as the operation of feeding power into the network continues
- it indicates faultless operation of the photovoltaic equipment

(2) **LED flashes green:**
- as long as the photovoltaic equipment is operating without fault
- and an additional message is displayed on the screen

Note! A message appears for example if there is an insulation fault, which however does not affect the function of the Conergy WR. However for safety reasons we recommend that the insulation fault is remedied as soon as possible.

The Conergy WR with display shows a status message.

If a message (e.g. „502“, Section „Status diagnosis and remedy) is shown, rectify the relevant status and acknowledge this by pressing the „Enter“ button.

(3) **LED lights up orange:**
- The Conergy WR unit will enter the automatic startup-phase, as soon as after sunrise the photovoltaic modules yield sufficient power output

LED for operating status (continued)

(4) **LED flashes orange:**

- when a warning is being displayed on the screen
- or the Conergy WR unit has been set to standby operation in the setup menu = manual shutoff of power supply operation
  - after the next day sunrise, power supply operation will be resumed automatically
  - during the time while the orange LED keeps flashing, the power supply operation can be resumed manually at any time (see chapter „Setup Menu“)

(5) **LED lights up red:**

- general status: the respective service code is displayed on the screen

A list of all service codes, the corresponding status informations, their status causes and repair measures can be found in the chapter „Status Diagnosis and Repair“ of the installation and service manual.

(6) **LED remains dark:**

- there is no connection to the solar modules
- no power output from module due to darkness

Operating scheme

The Display

General information

The Conergy WR unit is pre-configured to be ready for operation, therefore it is not necessary to make any adjustments in order to be able to get it to operate fully automatic and feed power into the mains.

The display is powered by the solar module and is therefore available throughout the day.

Important! The display of the Conergy WR is not a calibrated measuring device. A slight deviation by a few percent is inherent in the system. Therefore, a calibrated meter is required for accurate settlement of data with the electricity supply company.

Functions of the keys

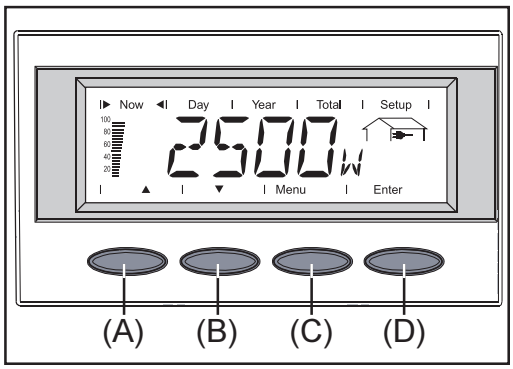

Key (A) and (B):
- for scrolling

key (C):
- for switching to the menu level („Menu“) or exit from the setup menu („Esc“) key „Enter“ (D):
- for confirming a choice

Symbols

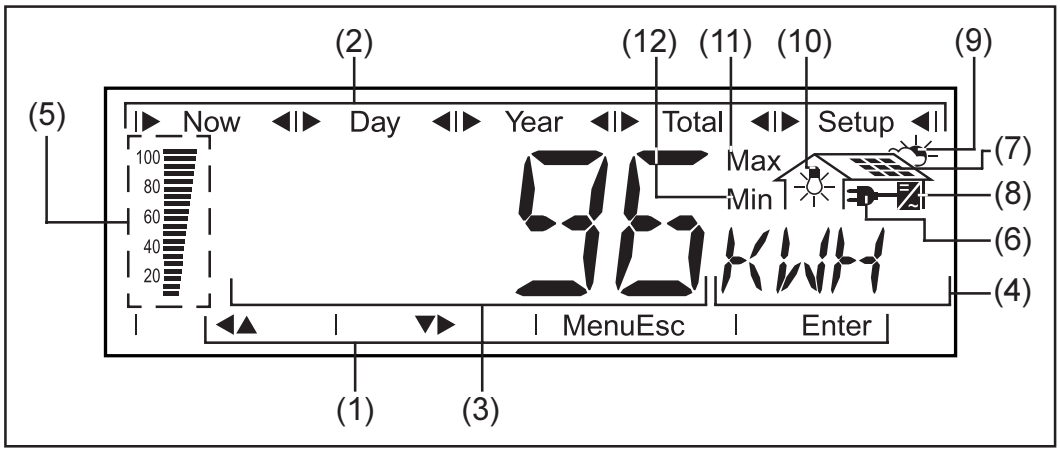

(1) **symbols for keys (A) through (D)**

(2) **symbols for the display modes „Now“ through „Setup“**

Symbols (continued)

(3) **area for data display** ... for displaying the data value measured

(4) **area for unit display** ... for displaying the measuring unit applicable

(5) **segment bar** ... indicates at any time the power output fed into the mains at a given time - independent from the display mode chosen. The screen displays % of the maximum possible power supply out put of your solar inverter

(6)  ... appears with data readings which are directly related to the public mains network

(7)  ... appears with data readings which are directly related to the solar modules

(8)  ... appears with data readings which are related directly to the Conergy WR unit

(9)  ... appears with data readings which are related to environment conditions, like insolation and temperature (optional)

(10)  ...appears with data readings which are transmitted by the consumption sensor (optional)

(11) **Max** ... the data reading indicates the maximum within the period of observation (depending on the display mode chosen)

(12) **Min** ... the data reading indicates the minimum within the period of observation (depending on the mode of display chosen)

Important! The Min. and Max. values do not correspond to the absolute extreme values, as the measuring data value capture takes place at two second intervals

Navigating in the Display

Display illumination

Press any key to activate the display lighting. If no key is pressed during 30 seconds, the display lighting stops. At the same time the setup menu offers a choice between permanently lit or permanently dark display.

Menu level

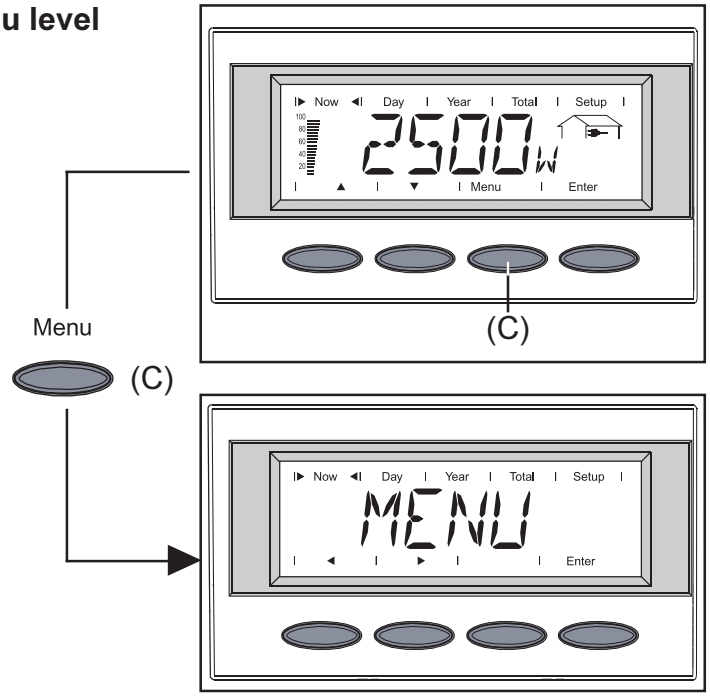

From the menu level you enter the display mode or the setup menu. Move into the menu surface by pressing key (C)

- the screen displays „Menu“
- the display is operating in the menu level

Select display mode

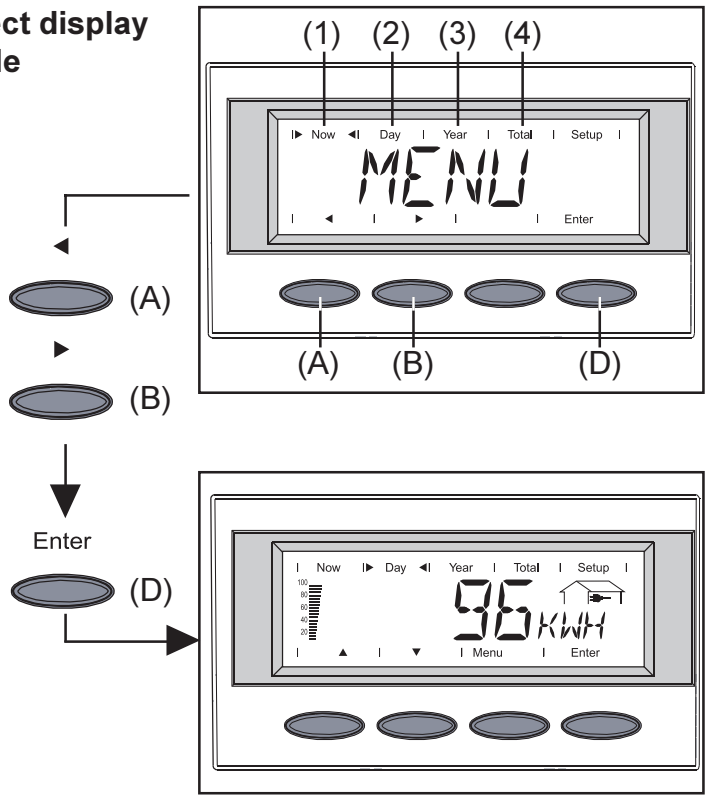

- move into the menu level
- select the desired display mode (1) to (4) by pressing keys (A) or (B)
- enter the display mode selected: press key „Enter“ (D)

Note! for the menu item „Year“ a real time clock is required. The menu item „Year“ is only supported when the option data recorder is connected. This system upgrade is equipped with a real time clock.

Scrolling between display functions

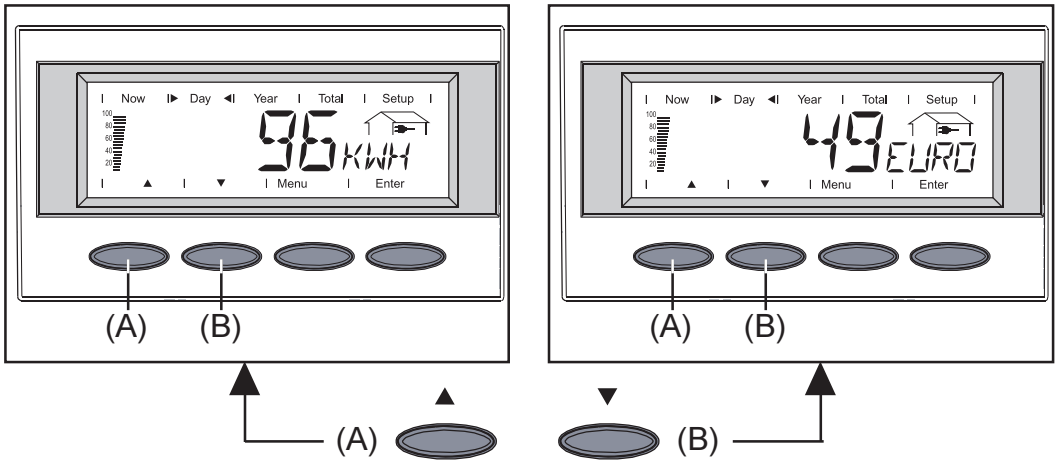

- select the desired display mode (see above)
- scroll between the display functions available with keys (A) or (B)

Display Modes

Scheme of display modes

The following display modes are available:

display mode „Now“ ...shows present data

display mode „Day“ ... shows data for supply into the mains for the current day

display mode „Year“ ...shows data for supply into the mains in current calendar year - only in combination with data recorder option

display mode „Total“ ... shows data for supply into the mains since your Conergy WR unit has been first operating

Scheme of display readings

The following scheme contains a brief list of the display readings available.

Display readings without footnote are shown when the setting „standard“ is chosen (factory setting).

* optional - if the required option card is not available, the message „**N.A**.“ (**n**icht **a**ngeschlossen = not connected) is displayed.

Mode „Now“	**Mode „Day“ / „Year“ / „Total“**
output supplied (W)	energy supplied (kWh / MWh)
voltage (V)	yield (set applicable currency)
electricity supplied (A)	CO_2-reduction (kg / t)
mains frequency (Hz)	power output supplied (maxim.) (W)
* mains impedance (Ohm)	mains voltage (maximum) (V)
module voltage (V)	mains voltage (minimum) (V)
module power (A)	module voltage (maximum) (V)
* module temperature (°C;alternatively also °F)	* energy as read by consumption meter (kWh / MWh)
insulation resistance (MOhm)	* module temperature (maximum) (°C; alternat. also °F)
* output reading of consumption meter (W)	* module temperature (minimum) (°C; alternat. also °F)
* ambient temperature (°C; alternnatively also in °F)	* ambient temperature(maximum) (°C; alternat. also °F)
* insolation (W/m²)	* ambient temperature(minimum) (°C; alternat. also °F)
* time (HH:MM)	* insolation (maximum) (W/m²)
	operating hours of Conergy WR unit (HH:MM)

Display mode „Now“

▶ Now ◀	Day	Year	Total	Setup

Displays present readings

- select display mode „Now“ (chapter „The Display“)
- the first display function of the display mode „Now“ appears

* optional - in case the card for the required option is not available, the message „N.A.“ is displayed



(A) (B)

power supplied .. power supplied to mains at this moment (Watt)

- for the next item press key (B)
- to scroll back press key (A)



mains voltage (Volt)



power supplied ...power supplied to mains at the particular moment (Ampere)



mains frequency (cycles)



* **mains impedance** ... resistance of mains - parameter for safe power supply to mains (Ohm; optional ENS)

The resistance of the local low voltage mains up to the next transformer station is metered.

Whenever the local low voltage mains network is switched off for repair works, the mains impedance will increase substantially, in this case the Conergy WR unit will interrupt power supply for safety reasons.

Display mode „Now“
(continued)



module voltage... voltage in the solar modules at the moment of data display

The voltage indicated during power supply into mains is equal to the so-called MPP voltage (MPP = maximum power point). The Conergy WR unit keeps the module voltage always within the maximum possible power output withdrawal from the solar modules. This always guarantees an optimum efficiency performance of your photovoltaic generator..



module power ... power supplied by solar modules at the moment of data display (Ampere)

The Conergy WR unit keeps the module voltage always within the range of the maximum possible power withdrawal from the solar modules. This results in the optimum for the module electricity.



* **module temperature** ... temperature at solar modules (degrees centigrade; can also be set for degrees Fahrenheit; temperature sensor No.1; sensor card optional)



isolation resistance of photovoltaic generator (MOhm)

Isolation resistance is the resistance between the positive pole or the minus pole of the photovoltaic generator and the grounding potential. Whenever an isolation resistance higher than 500 kOhm is shown, the photovoltaic generator is sufficiently insulated.

Warning! An isolation resistance < 500 kOhm can be caused by an insufficiently insulated DC cable or by defective solar modules. In case of an insufficient isolation resistance you must in any case contact your Conergy service partner.

Important! Only an isolation resistance of less than 500 kOhm indicates that there is an error. Whenever a higher insulation resistance is shown it is not to be interpreted as an error.

Whenever there is an isolation resistance of less than 10 MOhm, the display differentiates between the negative potential and the earthing (minus sign „-“) and the positive potential and the earthing (plus sign „+“)

Display mode „Now“
(continued)



Display example for negative potential (sign „-“)
Short circuit between DC- line and earth



Display example for positive potential (sign „+“)
Short circuit between DC+ line and earth



* **power output drawn from mains supply...** present consumption (Watt; sensor card optional)



* **ambient temperature** (°C;°C; can also be set for °F in setup menu; temperature sensor Nr.2; sensor card optional)



* **insolation** ... insolation power output impact per square meter (Watt/m²; sensor card option)

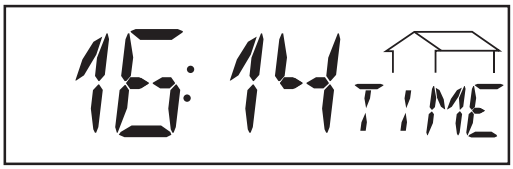

* **time of the day** (data recorder is optional)

Display mode „Day / Year / Total“

| Now | ▶ Day ◀ | Year | Total | Setup |

Display mode „Day“ ... shows readings for mains supply feed-in of current day - only in combination with bus-master option

Important! For the Conergy WR unit, the day begins with the moment it switches on. In case the DC supply line is disconnected, the following parameters will be re-set after repeating the start-up:

- power supplied (kWH)
- yield (currency can be selected)
- CO_2-reduction (kg)
- maximum power supplied (Watt)
- maximum mains voltage(Volt)
- minimum mains voltage (Volt)
- energy drawn from mains supply (kWh)
- operating hours for Conergy WR unit

The information given above does not apply for the data recorder option. If the data recorder option is available the display values listed always apply for the whole of the mains supply feed day.

| Now | Day | ▶ Year ◀ | Total | Setup |

Display mode „Year“ ...shows readings of power supply for the current calendar year (only in conjunction with data recorder)

| Now | Day | Year | ▶ Total ◀ | Setup |

Display mode „Total“ ...shows readings of power supply since original start of operation of the Conergy WR unit.

- select display mode „Day“ / „Year“ / „Total“ (chapter „The Display“)
- the first display function of the display mode selected will appear

* optional - in case the required sensor card is not available, the message **„N.A.“** is displayed.

Display mode „Day / Year / Total“
(continued)



Energy supplied ... energy supplied during period monitored (kWh / MWh)

(A) (B)

Due to different monitoring systems there can be deviations in comparison with readings of other metering instruments. For invoicing of the energy supplied only the readings of the calibrated meter supplied by the electric utility company are relevant.

- press key (B) for next item
- to scroll back press key (A)

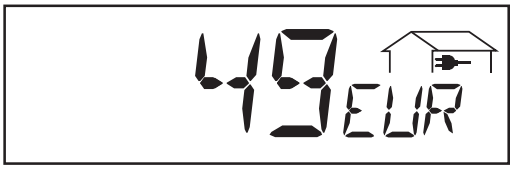

Yield ... money earned during period monitored (set currency in setup menu)

Important! As was the case for the energy supplied, also here readings may differ from those of other instruments.

Chapter „Setup Menu“ tells how to set currency and rate applicable for invoicing. The factory setting is 0,48 Euro/kWh.

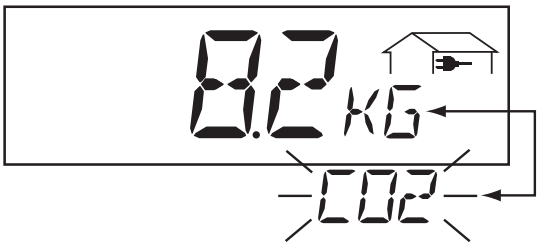

CO_2-reduction ... CO_2 emission saved during monitored period (kg/t)

Indication of CO2 emission (in kg/t) which would be released during generation of same amount of electricity in a thermal power station. Set for 0,53 kg/kWh in the factory (source of information: DGS - German Society for Solar Energy).



Maximum power input .. highest power input into main during observation period (W)



Maximum mains voltage ... highest reading of mains voltage (V) during observation period

Display mode „Day / Year / Total“
(continued)

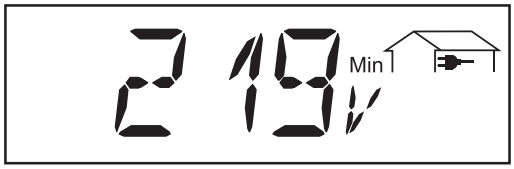

Minimum mains voltage...
lowest reading of mains voltage (V) during observation period



Maximum module voltage...
highest reading of module voltage (V) during observation period



* **Energy consumption meter reading**
energy consumed during observation period (kWh / MWh; applicable for consumption sensor)

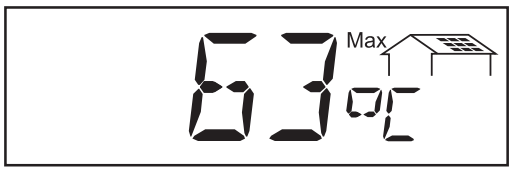

Note! Fit the temperature probe on the rear side of the solar module.

* **maximum temperature at module**... highest temperature reading at solar modules during observation period (°C; can also be set for°F in setup menu; temperature sensor No. 1; applicable for sensor card)



* **minimum temperature at module**...lowest temperature reading at solar modules during observation period (°C; can also be set for°F in setup menu; temperature sensor No. 1; applicable for sensor card)



* **maximum ambient temperature** ... highest temperature reading during observation period (°C; can also be set for °F in setup menu; temperature sensor No. 2; applicable for sensor card)



* **minimum ambient temperature**...lowest temperature reading at solar modules during observation period (°C; can also be set for °F in setup menu;temperature sensor No2; applicable for sensor card)

Display mode „Day / Year / Total“ (continued)



* **maximum insolation**... highest insolation during observation period (W/m²; sensor card optional)



operating hours ... duration of operation of Conergy WR unit (HH:MM)

Duration of operation is shown in hours and minutes upto 999 h and 59 min (display: „999:59“). From then on only full hours are displayed.

Although the Conergy WR unit is not operating during the night, all data required for the sensor card option are monitored and saved around the clock.

The Setup Menu

List of menu items

The following brief scheme shows the menu items provided for readjusting preset parameters of the Conergy WR unit

- **Standby** — Enter
- **Contrast** — 0 ... 7
- **LightMode** — AUTO — ON — OFF
- **Cash** — currency — rate / kWh
- **IG-NR** — 01 ... 99 (100. Conergy WR = 00)
- **DatCom** — OKCom — Error — SIGCD_TEST
- **Time** — Date — Time
- **State_PS** — Status display - power stage sets
- **Version** — MainCtrl — PS01 — ENS

Display mode „Setup“

Now	Day	Year	Total	▶ Setup ◀

The setup menu allows easy readjustment of the preset parameters of the Conergy WR unit in order to adapt to your needs and requirements in the best possible way.

Enter the setup menu

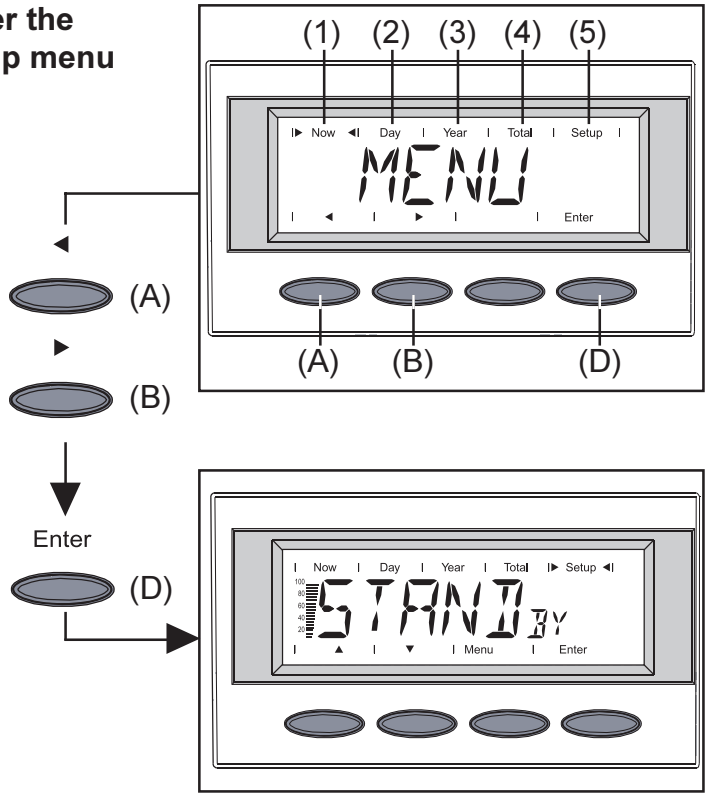

- move to to the menu level (chapter „Navigating in the Display“)
- select mode „Setup (5)“ with keys (A) or (B)
- enter the mode „Setup“ (5) : press key „Enter“ (D)

- „Standby“, the first item on the menu, is displayed

Scroll among menu items

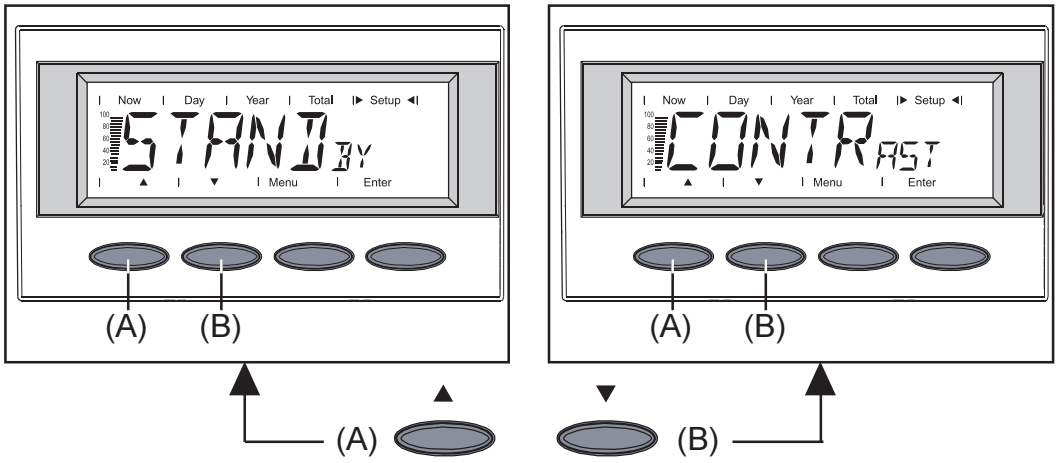

- select the desired display mode (see above)
- scroll with keys (A) or (B) among the menu items available

Setting the menu items

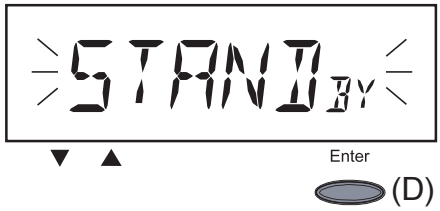

- **„Standby“** ...activate/deactivate the standby operation by pressing the „Enter“ key

The menu item „Standby“ allows manual activation of the standby operation of the Conergy WR unit.

During standby operation the electronic system of the power stage is switched off. No power is fed into the mains. There is an orange flash on the LED. The following message is flashed intermittently on the screen:

„STANDBY“ „ENTER“

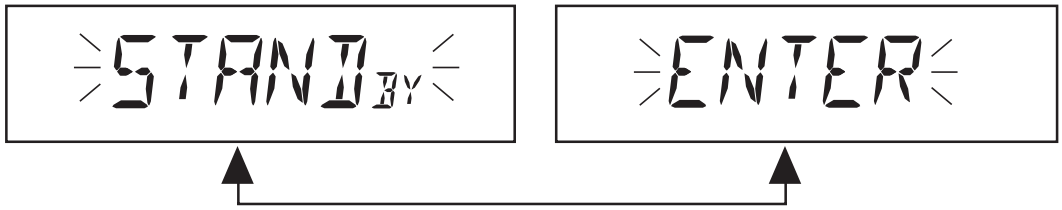

- The orange flashing LED stops with dusk arriving.
- After the subsequent sunrise, the power supply operation into the mains is resumed automatically (after termination of the startup phase the LED is illuminated green)
- mains supply operation can be resumed at any time whenever the LED is flashing orange (deactivate „standby“)

- LED with green light: activate „standby“ =manual shutoff of operation supplying power into mains system:
  - press key „Enter“ (D)
- LED with orange flash: deactivate „standby“ = resuming operation supplying power into mains system
  - press key „Enter“ (D)

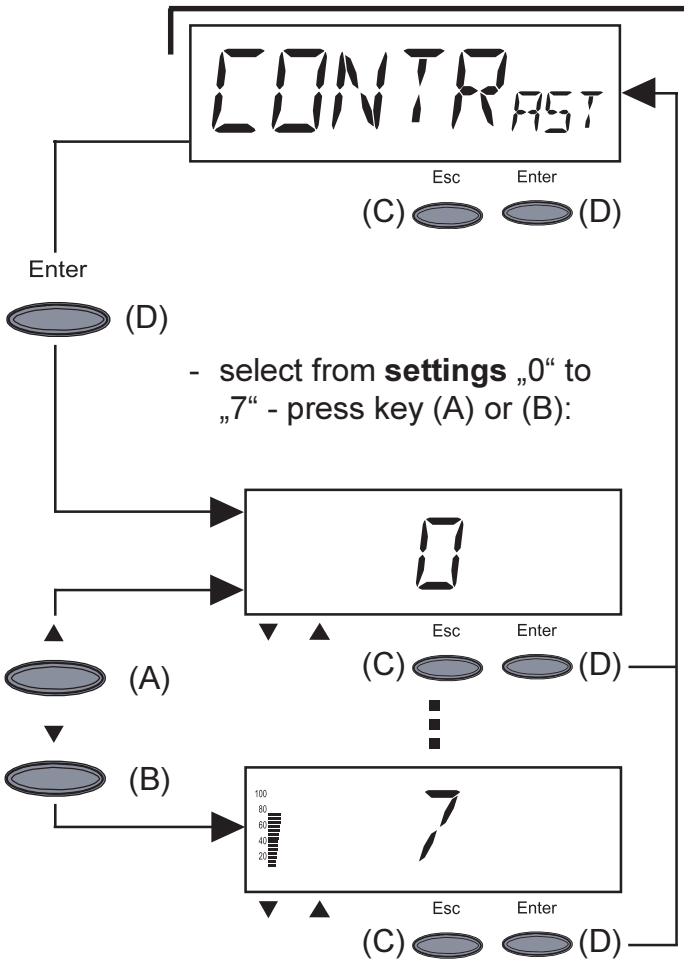

- **„Contrast“** ... set contrast on LCD display

- enter „Contrast“: press key „Enter“ (D)

As contrast depends on temperature, it may be necessary to adjust the menu item „Contrast“ when ambient conditions change.

Settings for minimum possible contrast (0) upto maximum possible contrast (7):

- accept: press key „Enter (D)“

- maintain previous setting: press key „Esc“ (C)

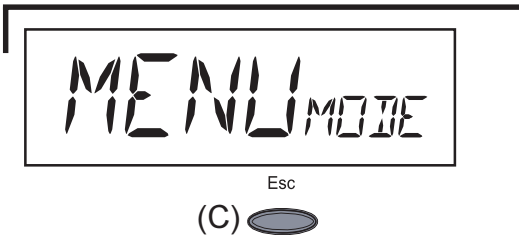

- **„Menu Mode“** ... cannot be selected

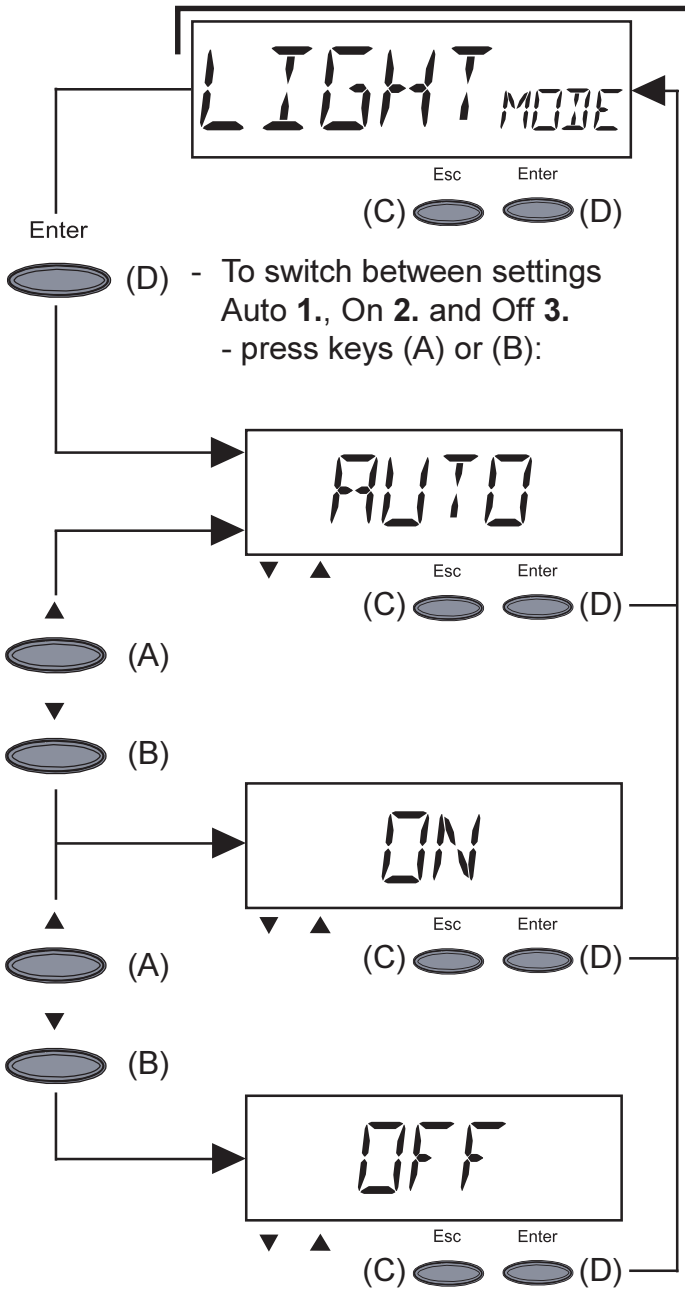

- **„Light Mode“** ... pre-setting of display illumination

- to enter „Light Mode“: press key „Enter“ (D)

1. The display illumination will stop 30 seconds after the last time a key has been pressed
- accept: press key „Enter“ (D)
- maintain previous setting: press key „Esc“ (C)

2. The display will remain permanently illuminated for the duration of the operation of power supply into the mains
- accept: press key „Enter“ (D)
- maintain previous setting: press key „Esc“ (C)

3. The display illumination will be permanently off:
- accept: press key „Enter“ (D)
- maintain previous setting: press key „Esc“ (C)

Important! These instructions are only applicable for the display background illumination. It is not necessary to deactivate the display itself because its energy consumption is less than one mW (1/1000 W).

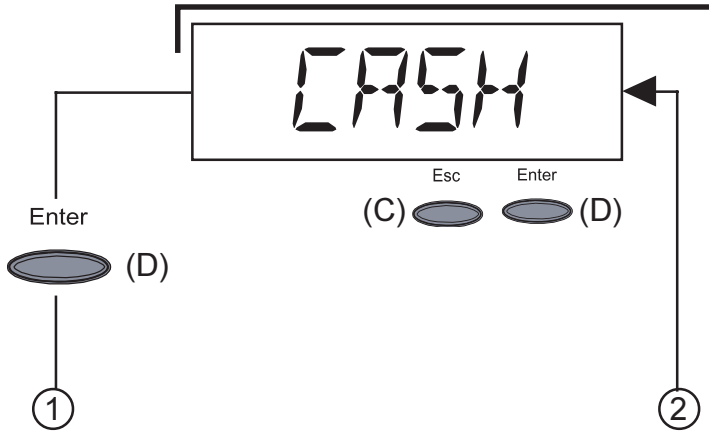

- **„Cash“** ... setting of currency and rate for invoicing the energy supplied
- enter „Cash“ by pressing key „Enter“ (D)

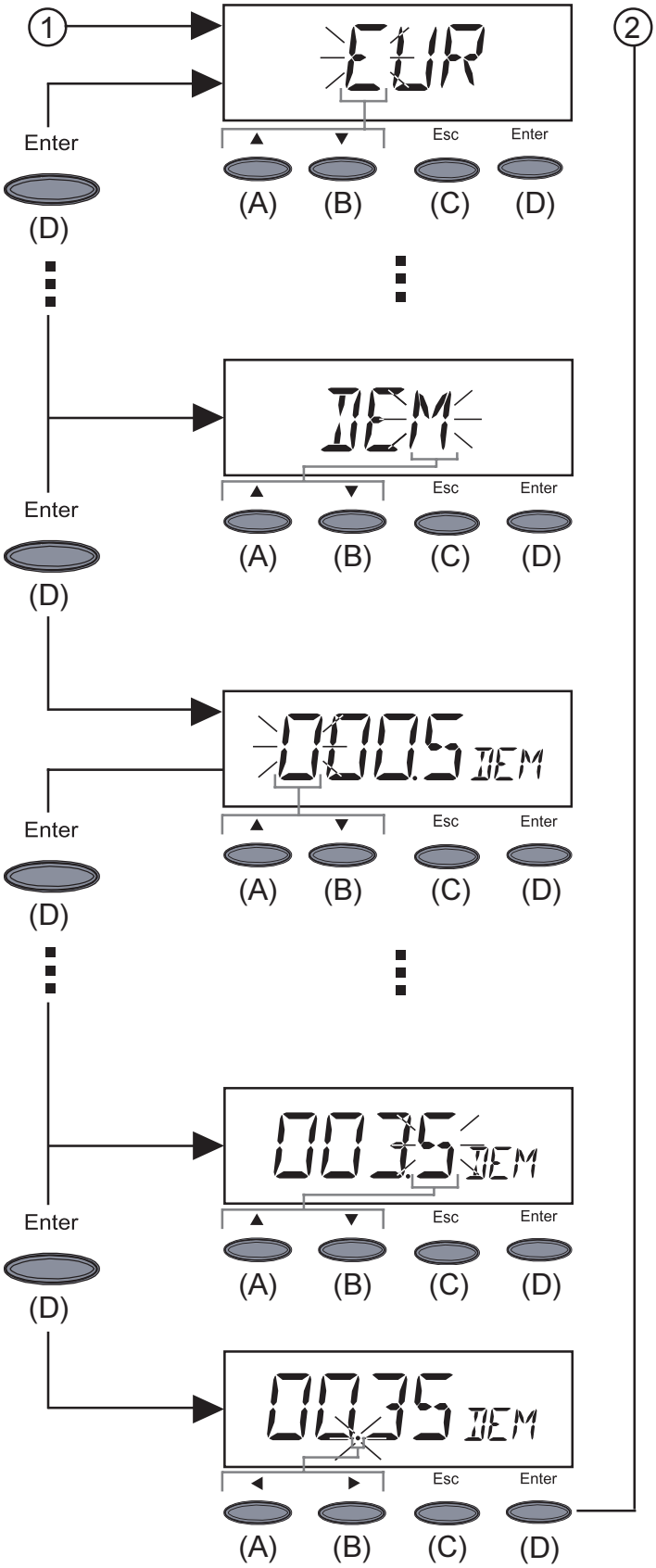

1. Enter currency (factory pre-set for EUR)

- first digit starts flashing
- select a character for the first digit by pressing key (A) or (B)
- confirm by pressing key „Enter“(D)
- next digit starts flashing

- follow same procedure as described above for subsequent digits
- accept the currency selected by pressing key „Enter“ (D)
- to maintain previous setting, press key „Esc“ (C)

2.Enter rate per kWh according currency selected (preset rate: 0,48 EUR/kWh)

- first digit starts flashing
- select a figure for the first digit by pressing key (A) or (B)
- confirm by pressing key „Enter“ (D)
- next digit starts flashing
- for subsequent digits, follow same procedure as described above for first digit

- decimal point starts flashing
- move the decimal point to the position desired by pressing keys (A) or (B)
- accept the rate set by pressing key „Enter“ (D)
- to maintain previous setting, press key „Esc“ (C)

Note! numbers between 000,1 and 99,99 may be selected

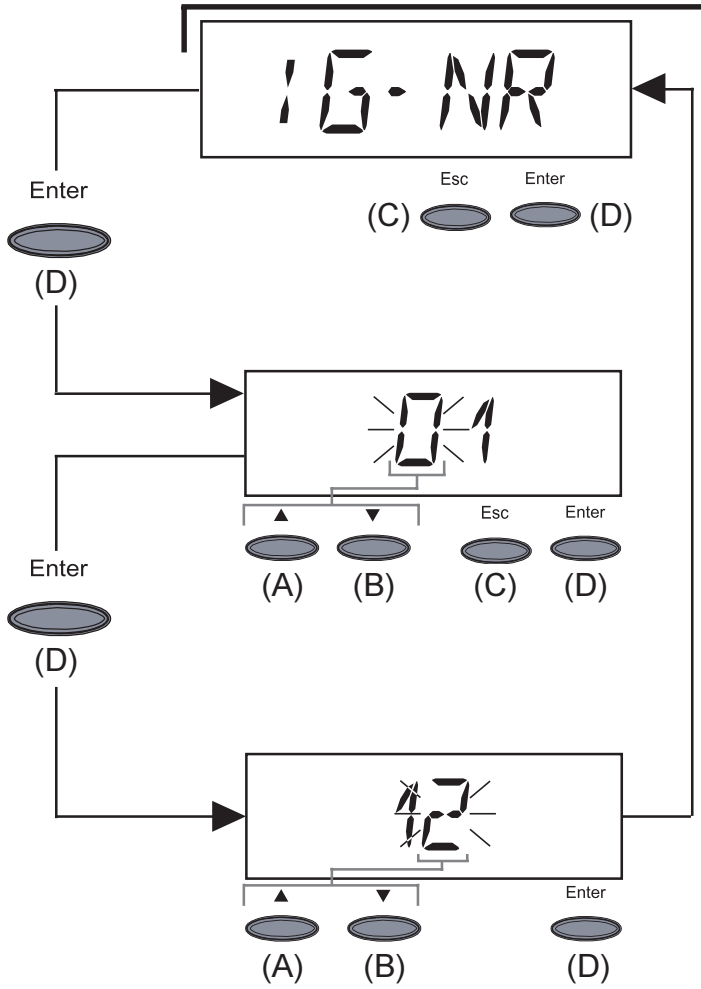

- **„IG-NR“** ...Setting the number (=address) of the Conergy WR unit in a setup comprising more than one photovoltaic inverter linked with each other

- enter „IG-NR“ by pressing the key „Enter“ (D)

enter address (01 ... 99)
(factory setting: 01)

- first digit starts flashing
- select a figure for the first digit by pressing key (A) or (B)
- confirm with key „Enter“ (D)
- subsequent digit starts flashing

- for second digit follow procedure as described above for first digit

- accept the IG-No. selected: press key „Enter“ (D)
- maintain previous setting: press key „Esc“ (C)

Note! Allocate an own address to each Conergy WR when connecting several Conergy WR into a data communication network using data recorders.

It is important to give each Conergy WR an own address, so that the data recorder can differentiate between the individual static inverters. If two Conergy WR are in the system with the same address, they cannot communicate with the data recorder. Set another address on the Conergy WR showing the status-message 504.

Important! Version without display: You will find the relevant information for address setting in the operating manual chapter entitled „Installation“ in the section „Version without Display: Set address“.

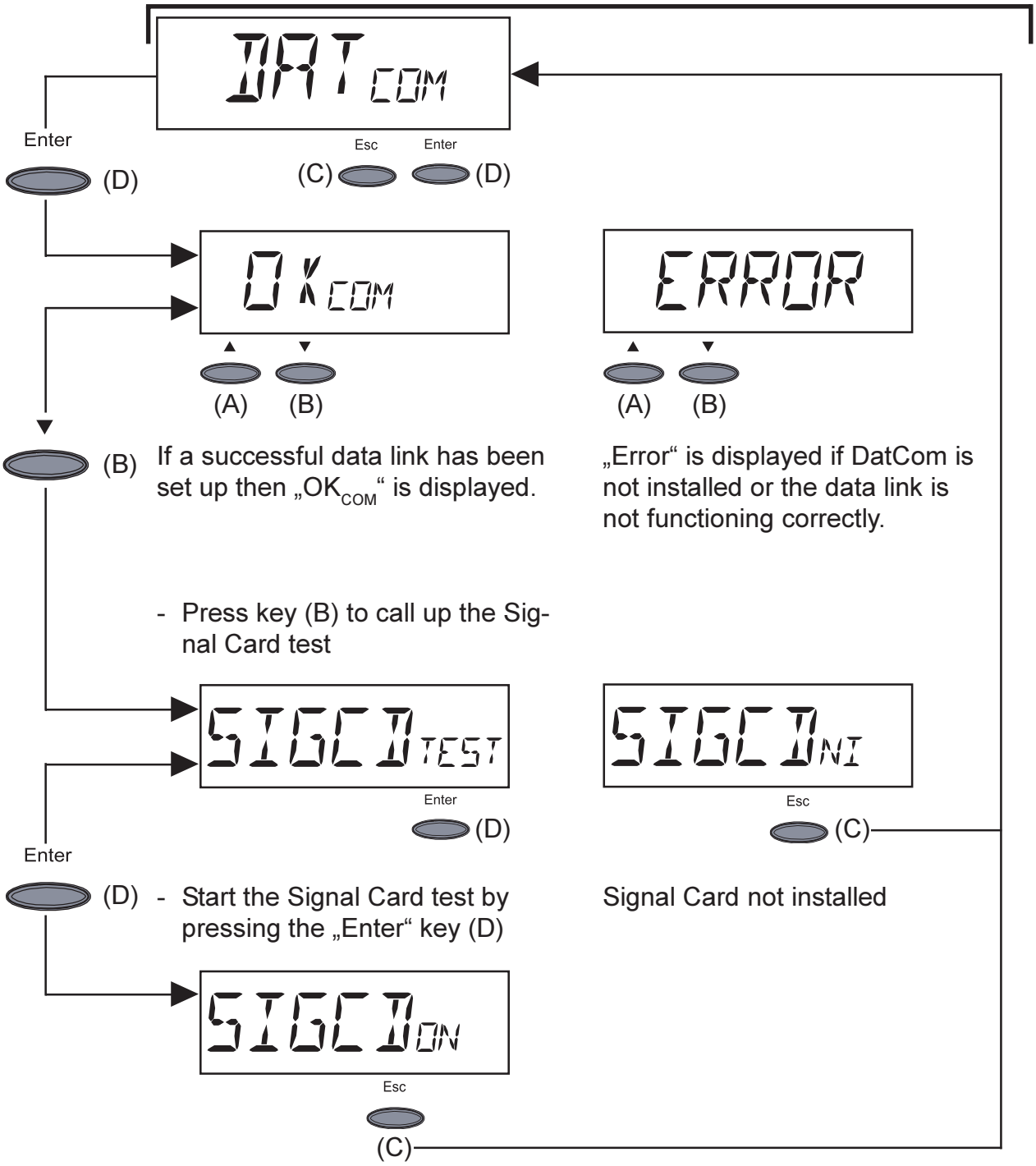

Signal Card active
- The Signal Card‘s acoustic signal sounds for confirmation.

Important! Check the signal lines if the signal fails to sound.

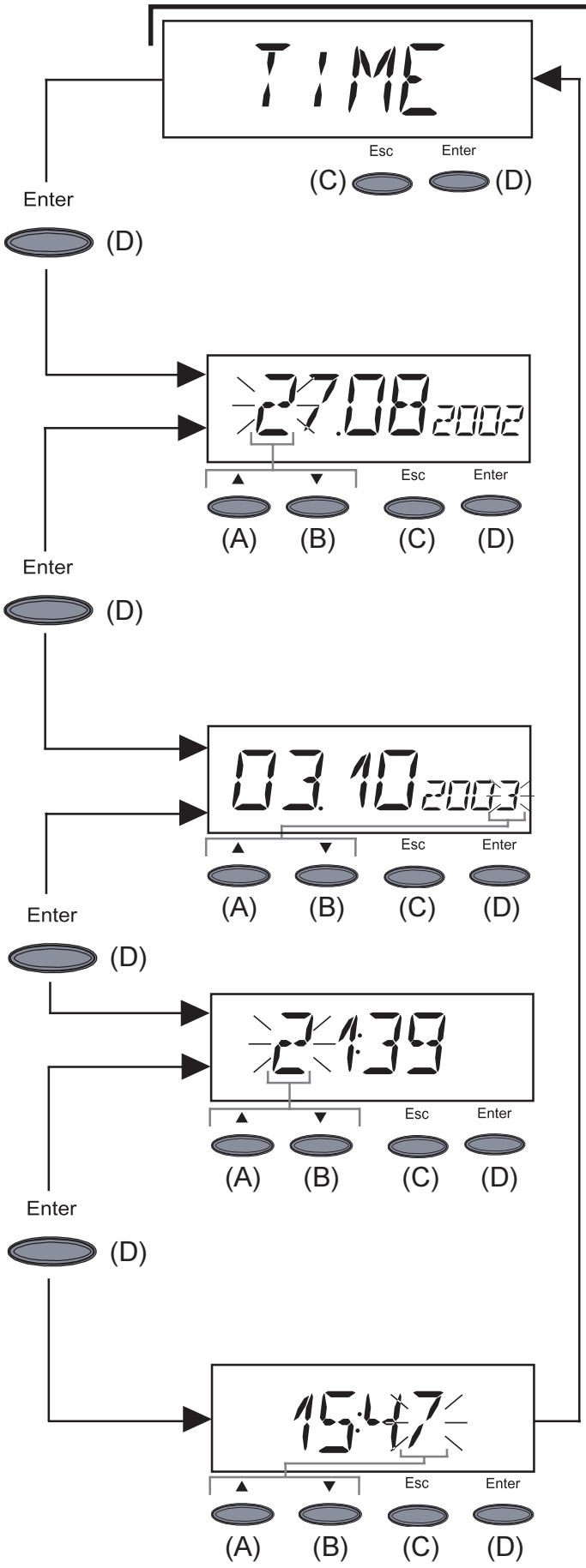

Important! The menu item „Year“ is only supported when the option data recorder is connected.

- **„Time“** ... setting of date and time
- enter „Time“ by pressing key „Enter“ (D)

1. Enter date (e.g.: 03.10.2003)

- first digit starts flashing
- select a character for the first digit by pressing key (A) or (B)
- confirm by pressing key „Enter“ (D)
- next digit starts flashing

- follow the same procedure as described above for subsequent digits
- accept the date selected by pressing key „Enter“ (D)
- to maintain previous setting, press key „Esc“ (C)

2. Enter time (z.B.: 15:47)

- first digit starts flashing
- select a figure for the first digit by pressing key (A) or (B)
- confirm by pressing key „Enter“ (D)
- next digit starts flashing

- for subsequent digits, follow same procedure as described above for first digit
- accept the time set by pressing key „Enter“ (D)
- to maintain previous setting, press key „Esc“ (C)

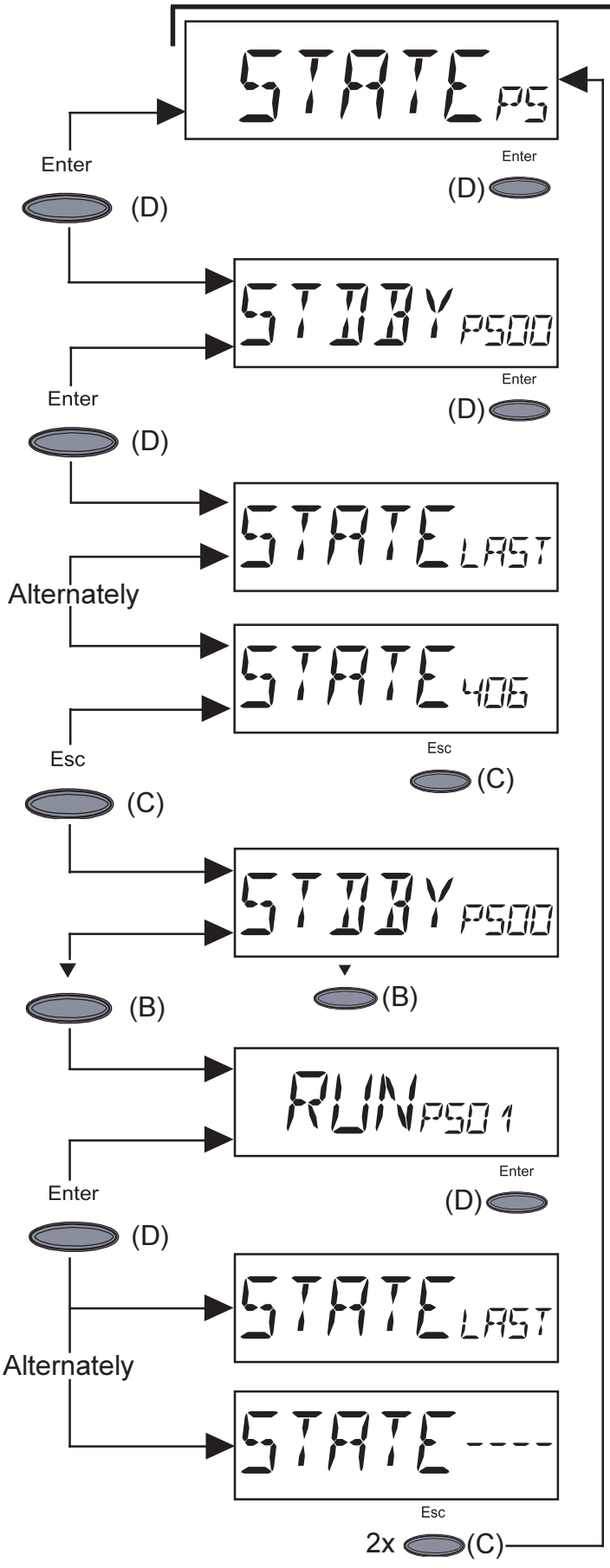

- **„STATE_PS“** ... Status display of power stage sets
- Press „Enter“ key (D)

- In this case for example the first power stage set (PS00) is on „Standby“
- „Standby“ means no electricity is being fed into the public mains
- Press „Enter“ key (D)

- Display of the most recently stored service code (e.g. „State 406“)

Important! The most recently stored service code and the display „State Load“ appear alternately.

- Press „Esc“ key (C)

- The display for the first power stage set (PS00) re-appears
- Change over to the second power stage set by pressing key (B)

- In this case for example the second power stage set (PS01) is on „Run“
- „Run“ means intact delivery of electricity to the public mains
- Press „Enter“ key (D)
- Display of the most recently stored service code (e.g. „State----“)

Important! The most recently stored service code and the display „State Load“ appear alternately.

- Escape: Press „Esc“ key (C) twice

Important! Status displays 306 (Power Low) and 307 (DC-Low) appear naturally every morning and evening due to low solar irradiation. These status messages are not the result of a fault.

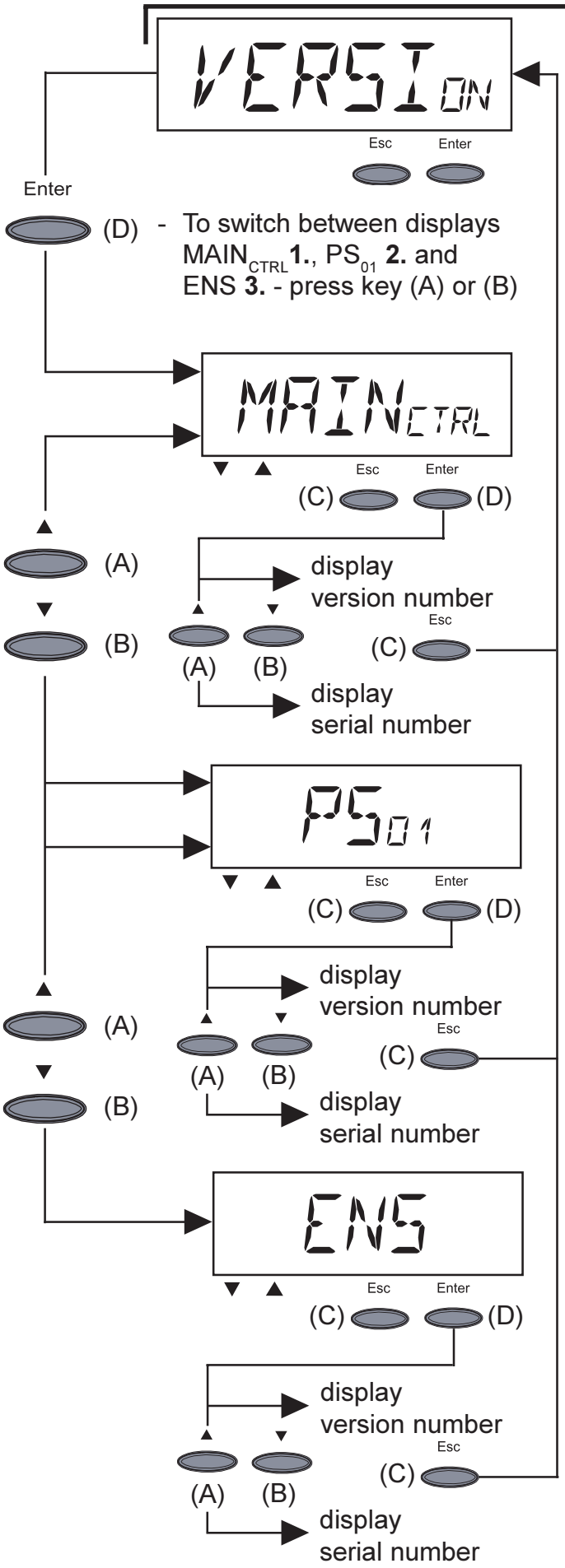

- **„Version“** displays version number and serial number of the IG control unit and the power stage

- enter „Version“by pressing key „Enter“(D)

1. For displaying version number of the IG control unit : press key „Enter“ (D)
  - exit by pressing key „Esc“ (C)
- to switch into display of serial number for the IG control unit: press keys“ (A) or (B)“
  - exit with key „Esc (C)“

2. To display version number of power stage, press key „Enter (D)“ - exit with key „Esc (C)“
- to switch into display of serial number of the power stage, press keys „(A) or (B)“ - exit with key „Esc (C)“

3. To display type number of ENS: press key „Enter“ (D)
  - exit with key „Esc“ (C)
- to switch into display of version number for ENS: press keys (A) or (B)
  - exit with key „Esc“ (C)

Note! in case the Conergy WR unit is not equipped with the ENS option, type number and version number cannot be displayed.

- after the „Enter“ key (D) has been pressed, the message „N.A.“ is displayed on the screen
- exit by pressing key „Esc (C)“

Additional information

Upgrading the system

The Conergy WR unit is prepared for a whole series of system upgrades. The following system upgrades (compatible with IG Dat Com) are available for example:

- for communicating between Conergy WR and outside system extensions, for example with other Conergy WR units
- Data logger (for recording and managing data from your photovoltaic system by PC) including datalogger and modem connection
- Various large displays
- Actuators / Relays / Alarm
- Sensors

The system upgrades are offered in slot-in boards, similar to those on your personal computer.

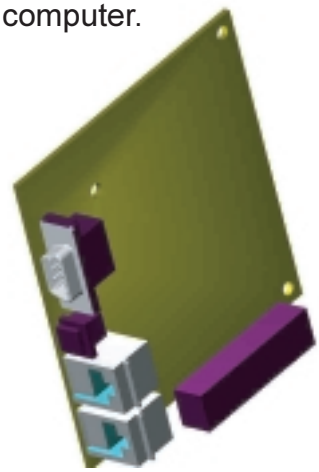

For increased flexibility, all upgradings are also available in a version with external housing

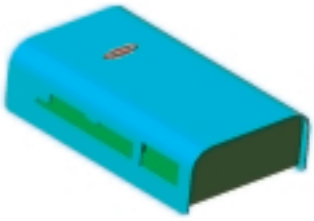

LocalNet is a data network which allows linking more than one Conergy WR unit with the system upgrade elements.

LocalNet is a bus system. One single cable is sufficient to allow communication between one or several Conergy WR units with all system upgrade elements. This reduces the cable requirement to a minimum.

Upgrading the system (continued)

Please take further details from the chapter „LocalNet“ of the installation and service manual.

Forced ventilation

The Conergy WR unit is equipped with a temperature and rotation controlled air circulator which provides for the following features:

- smaller heat sinks - more compact housing
- components are better cooled - efficiency increases / longer life
- least possible energy consumption / noise level, due to rotation control and ball bearing support
- should there not be sufficient heat discharge in spite of maximum rotation of the ventilator (for example no adequate heat transfer away from the control panels) the power will be derated for auto-protection of the Conergy WR unit.
  - derating the power reduces the output of the Conergy WR unit for a short period sufficient to ensure that the temperature will not exceed the admissible parameter.
  - your Conergy WR unit will remain ready for operation as long as possible without any interruption.
  - Even if the Conergy WR is frequently used at full load the fan can be expected to last approx. 20 years.

Installation manual

Open the housing

Conergy WR

Warning! Hazard due to supply voltage and DC-voltage from the solar modules. Only licenced electricity installers are authorized to open the connection area. Only trained service staff are authorized to open the separately insulation-enclosed power stage on condition that it is not under voltage.

Opening connection area

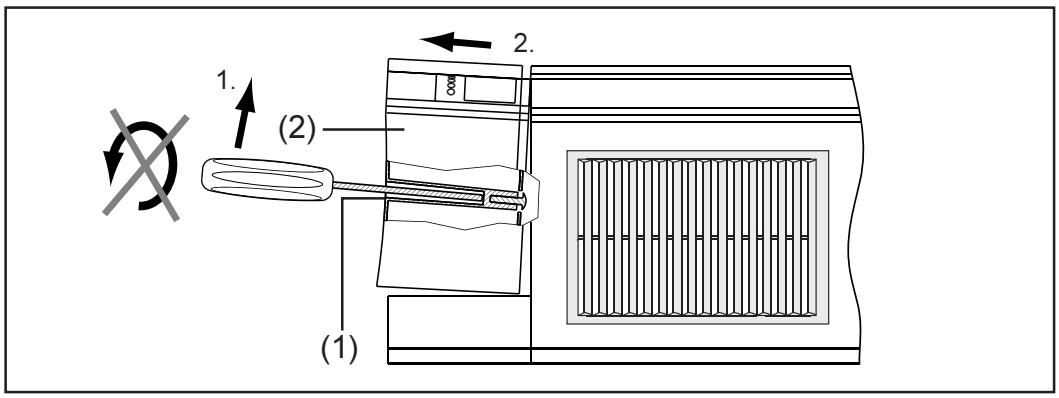

- insert screwdriver into the borehole (1) at the bottom of the Conergy WR
- unlock cover (2) of connection area by lifting the screwdriver carefully at the end of its handle
- pull cover (2) of connection area downwards and away

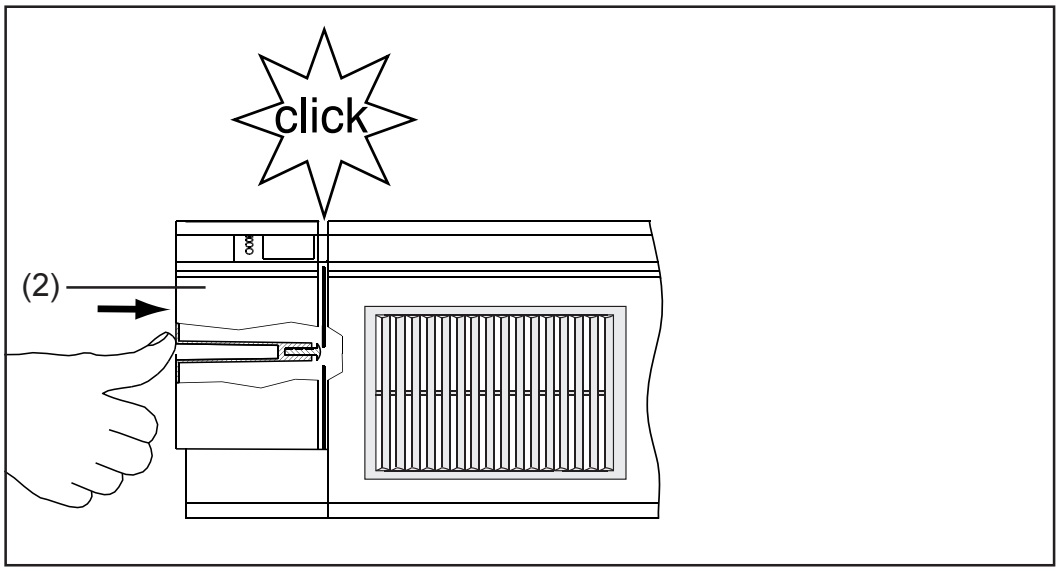

Important! To close the connection area put on cover (2) and push it forward until it reaches the locking position.

Conergy WR
(continued)

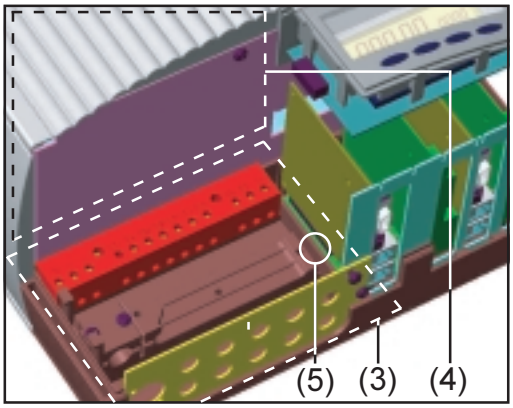

(3) connection section is open
(4) power stage

Warning! Hazard due to supply voltage and DC-voltage from the solar modules. Only trained service staff are authorized to open the separately insulation-enclosed power stage

- loosen securing screw (5) and remove wall mounting frame

Installation

Choosing the location general

Make the best possible use of your Conergy WR unit by additionally observing the following conditions:

- mains impedance should not be unnecessarily increased by a too narrow AC conductor cable cross section between the Conergy WR unit and the in-house distribution panel. The AC conductor cable resistance between the Conergy WR unit and the house distribution panel must not exceed 0,5 Ohm.
- install it only on a solid vertical wall
- The ambient temperature should not be under minus 20 degrees or over 50 degrees centigrade.
- No objects must be located within a distance of 15 cm around the air vents on both sides of the Conergy WR unit
- Keep a lateral distance of 20 cm between individual Conergy WR units.
- The air flow direction within the inverter is from left to right (cold air intake left, hot air exit right).
- When installing the Conergy WR unit in a switch panel cabinet (or similar closed sections) it is necessary to make sure that the hot air which develops will be discharged by forced ventilation.

Choosing the location

The Conergy WR unit can only be installed inside buildings or on outside locations provided that they are protected from rain or snow.

- During certain operation phases the Conergy WR unit may develop a slight noise level, for this reason it should not be installed in the immediate vicinity of living areas
- the Conergy WR unit is not to be set up in areas where there is heavy dust development
- the Conergy WR unit is not to be set up in areas where there is heavy incidence of conducting dust particles (for example iron filings)

Choosing the location (continued)

- the Conergy WR unit is to be installed at a height which keeps the display slightly below the position of your eyes in order to secure best possible readability of the display.
- The distance between the top edge of the Conergy WR and the ceiling should be approx. 30 cm.

Fixing the wall mounting frame

⚠ Hazard due to supply voltage and DC-voltage from the solar modules. Only licensed electricity installers are authorized to open the connection area.

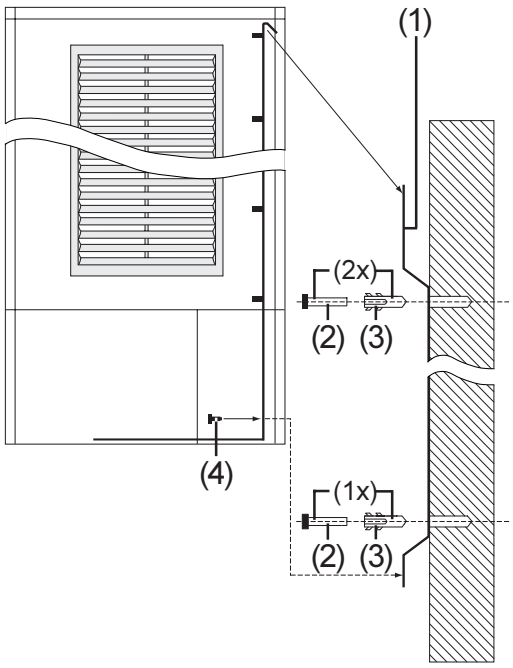

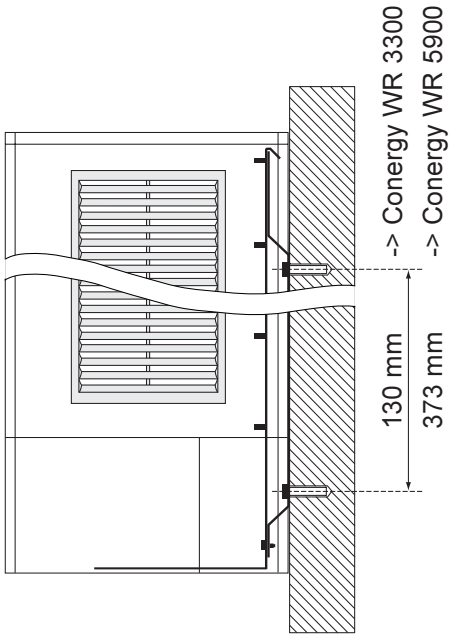

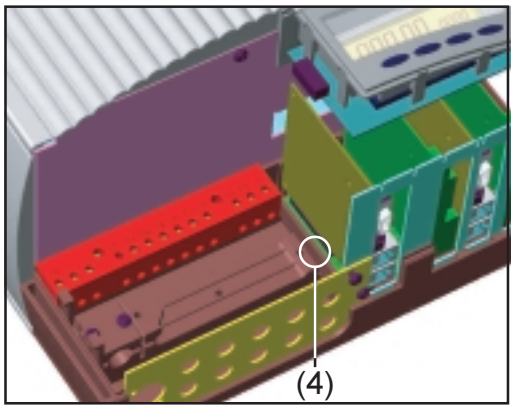

Important! Dowels and screws are not included as there are too many different types on the market to suit different wall surfaces.

- fix wall mounting frame (1) with suitable screws (2) and dowels (3) on to a solid base.
- Open the connection area of the Conergy WR unit (chapter „Opening the Housing“)

⚠ **Caution!** There is a danger of the machine toppling over. Hang the Conergy WR unit into the wall mounting frame and secure it with screw (4) in the connection area.

- install AC and DC cable as described in chapter „Connection“.
- close connection area and mount cover by means of tightening screw.

Fixing the wall mounting frame (continued)

The housing is designed for a cable channel of up to 50 mm height which can be located directly below the connection area, without

- cables visible below the Conergy WR unit
- impairing access to the connection area and the slot- in board area

Important! Should a cable channel be located below the Conergy WR unit, the following must be observed:

- lower edge of Conergy WR unit will be located exactly 26 mm beneath the wall mounting frame

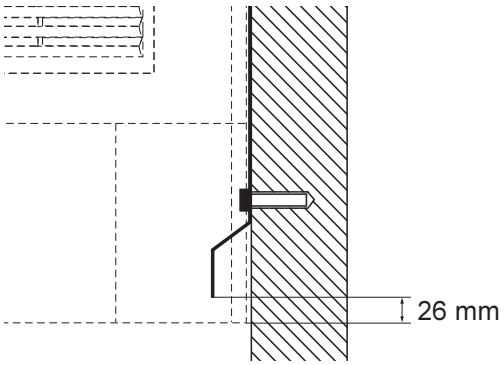

Connection

Connection to the Solar Modules and to the Public Mains

Solar modules

The following points are important for the most economic use of the Conergy WR unit when choosing suitable solar modules:

- the no-load voltage increases when temperature decreases with insolation remaining unchanged. Therefore the no-load voltage must not exceed 500 V - or 530 V for the WR 5900E.

Whenever the no-load voltage of the solar modules exceeds 500 V - or 530 V for the WR 5900E - the Conergy WR unit will be destroyed, and all warranty rights will become null and void.

- More exact data for dimensioning the solar modules for the location chosen can be obtained using calculation schemes.

Mains network monitoring

As your Conergy WR unit need be connected to only one phase of the mains network, in can be installed in almost any part of the house.

Warning! In order to ensure the best possible functioning of the mains monitoring system, it is important to make sure that there is a minimum of resistance in the feeding lines to the connection point. The AC conductor resistance between the Conergy WR unit and the house distribution panel must not exceed 0,5 Ohm.

Warning! Hazard due to supply voltage and DC-voltage from the solar modules. Only licenced electricity installers are authorized to open the connection area and only provided that it is not under voltage.

Schemes with more than one inverter

For larger photovoltaic schemes it is possible to connect several Conergy WR units in parallel without any problems.

In order to secure a symmetric feed-in of the power supply, the Conergy WR units should be connected evenly to all 3 phases.
If you have any doubt you should approach your specialized dealer whenever there are technical problems.

Connection alternatives

Depending on the options installed in your Conergy WR unit, you have the following alternatives to connect the solar inverter at the DC solar modules and to the public AC mains:

Note! Only cables up to a cross section of 4 mm² are permitted for the AC-plug-type connector.

Only use cables with a cross-section of 4 sq.mm for the Conergy WR 5900.

Important! We recommend AC protection as follows:
- A special16 A fuse for each Conergy WR 1700 and 3300
- A special 25 A fuse for each Conergy WR 4600 and 5900
- Alternatively for Conergy WR 4600 and 5900: 32 A , type „C“ miniature circuit-breaker

1. Terminal block (connection within the housing)
2. DC plug (choice of up to 5 DC sockets, AC connection within the housing)
3. DC plug and AC plug connection (choice of up to 5 DC plug pairs, AC plug connection)

The following chapters show the connection of the Conergy WR unit separately for each one of the connection alternatives.

1. Terminal block

- Fix the Conergy WR unit to the wall as shown in chapter „Installation“.

The housing is designed for a cable channel of up to 50 mm height which can be located directly below the connection area, without
- cables visible below the Conergy WR unit
- impairing access to the connection area and the slot- in board area

Permissible cross-sections for AC and DC connection cables:
- cable without wire end ferrules: 6 mm² and 10 mm²
- cable with wire end ferrules: 6 mm²

Note! Tighten the screws of the terminal strip with 1.8 Nm.

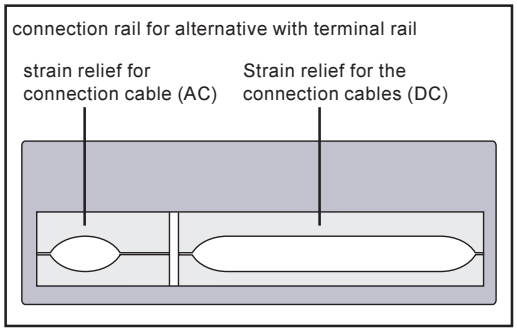

- feed the 3 pole connection cable to the public mains through the connector rail and strain relief device and slide it into the terminal block
- connect the leads of the connection cable as marked on terminal

1. Terminal block (continued)

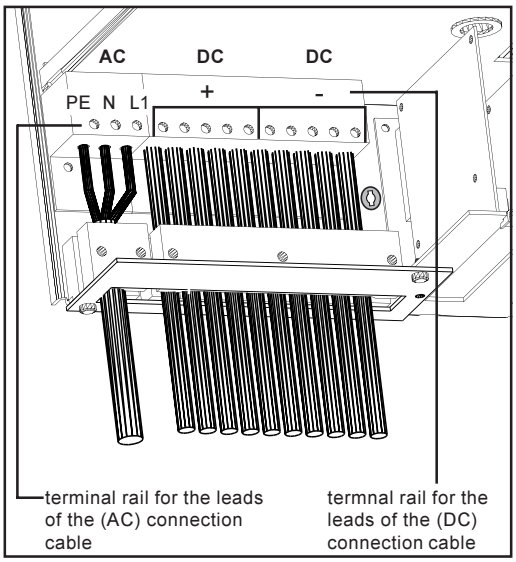

- lead the connection cable for the DC supply through the connector rail and strain relief device and slide it into the terminal block
- connect the leads of the connection cable according to terminal markings
- fix the connection cables with the strain relief device
- close connection area

2. DC plug

For easier installation and maintenance the solar modules are connected via a contact- voltage-proof plug connection with a choice between one and five plug pairs

- fix the Conergy WR unit on the wall as shown in chapter „Installation“

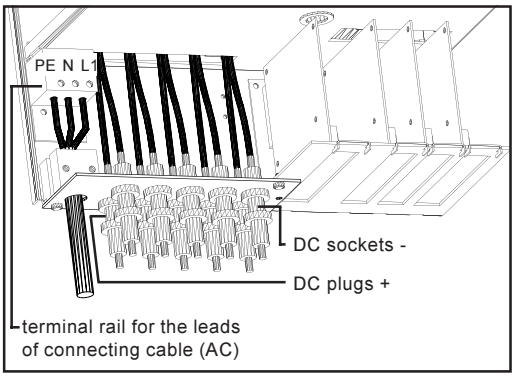

- open connection area - see chapter „Open the Housing“
- slide the 3 pole connection cable for the public mains through the connection plate and strain relief into the terminal block
- connect the leads of the connection cable as marked on the terminal

- fix connection cable with strain relief device
- close connection area, install cover

Example for DC plug: Multicontact socket

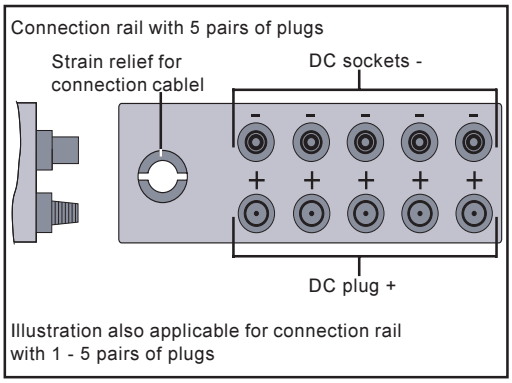

Note! When installing the DC plugs for connection with the solar modules, make sure that the poles of the solar modules correctly correspond with the symbols „+“ and „-“.

2. DC plug (continued)

- install the multicontact plugs at plus and minus poles of solar module strings
- connect the strings to the Conergy WR unit

Note! Never disconnect the DC plugs from the respective sockets during power feed operation of the Conergy WR unit. Before disconnecting the strings always first disconnect the mains supply or switch the Conergy WR to standby operation.

Not complying with this instruction may damage the connection plugs.

Should an electric arc develop during disconnecting, both plug and socket must be replaced. Do not re-use defective DC plugs.

3. DC plug and AC connection

To make installation and maintenance work easier, the solar modules and the mains are connected with plugs. Depending on which version is used, up to five pairs of DC plugs are available for connecting the solar modules. Connection to the mains is effected by means of a touchproof AC plug which can be latched.

- Fix the Conergy WR unit on the wall as shown in chapter „Installation“

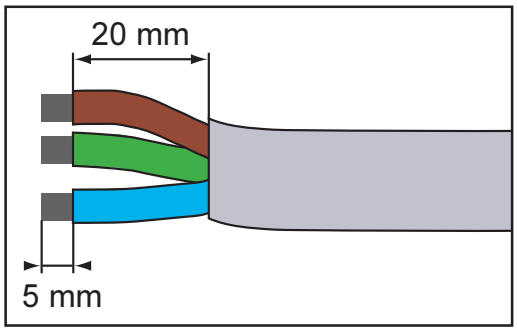

Bare the mains cable as shown in the illustration for the AC-plug-type connector

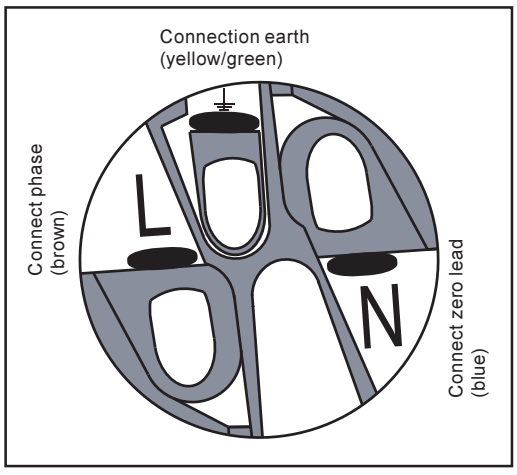

Install the AC plug as follows:

- slide parts (2) and (3) on to the mains cable as shown in the illustration below
- connect the mains cable leads with the AC plug as shown in opposite illustration

3. DC plug and AC connection (continued)

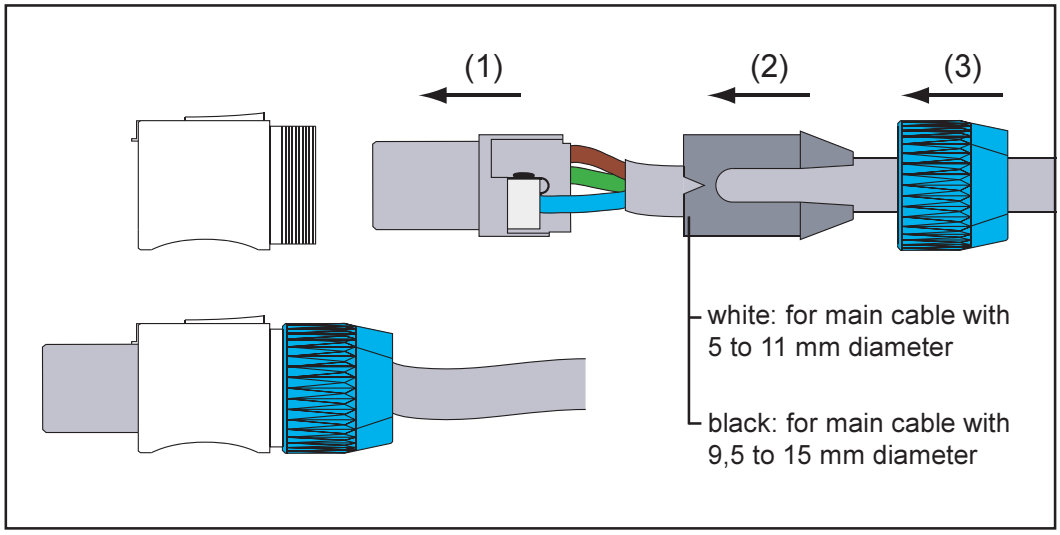

- assemble AC plug
- connect AC plug to Conergy WR unit and latch

Note! Always shut off voltage before unplugging the AC connection by disconnecting fuse in the house distribution cabinet.

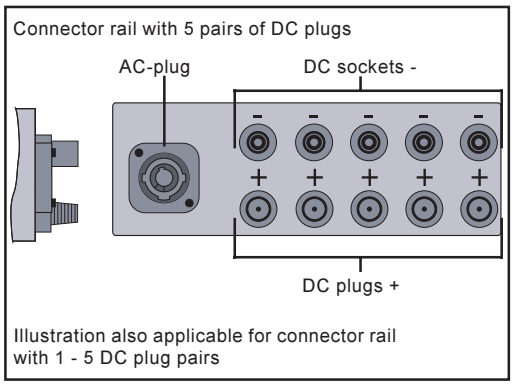

Note! When installing DC connections for solar modules make sure that the plus and minus poles correspond with the respective symbols.

- install DC connections on the plus and minus pole of the strings on the solar modules
- plug the strings on to the Conergy WR unit

Note! Never disconnect the DC connections of the Conergy WR unit from the sockets when it is in operation of feeding power supply. Before disconnecting the strings, always first disconnect fuse in the house distributor panel.

Failing to comply with this instruction may damage the plug connections.

Should an electric arc develop during unplugging, both plug and socket must be replaced. Never re-use damaged DC connections.

Start up Operation

Configuring your Inverter

Factory preset configuration

Your Conergy WR unit has been pre-configured in the factory and is ready for operation.

After connecting the Conergy WR unit to the solar modules (DC) and to the public utility mains (AC), all you have to do is close the AC and DC isolating switch.

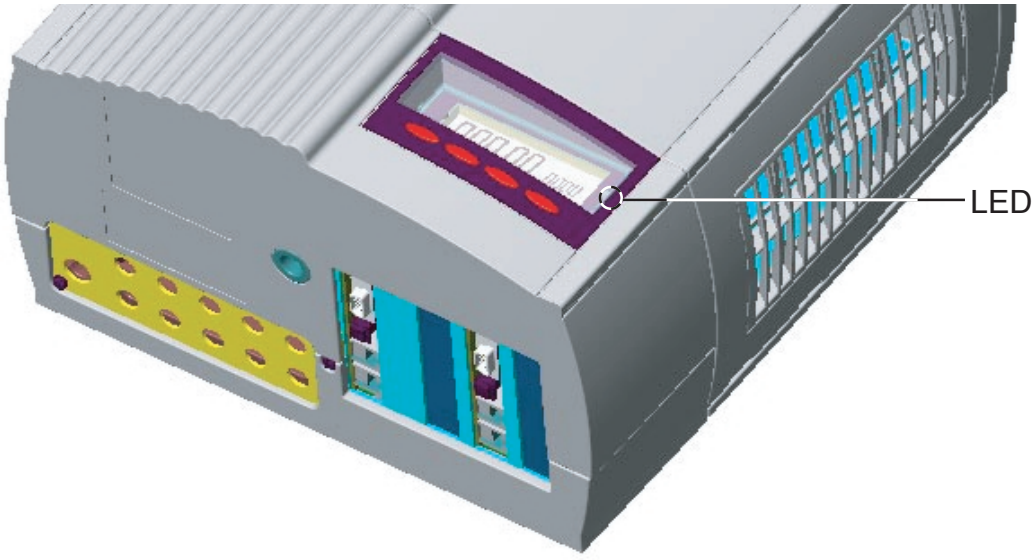

- as soon as the photovoltaic modules produce sufficient power, the LED lights up orange and the screen starts displaying the startup procedure
- the orange light of the LED indicates that the automatic startup procedure of the Conergy WR unit will begin shortly
- after the Conergy WR unit has started automatically, the LED light turns green
- the LED light continues green as long as power supply is fed into the mains, it confirms that the operation continues to function without fault.

In case the initial operation of your Conergy WR unit does not proceed as shown above and the Conergy WR unit does not start feeding power supply into the mains network, you should consult the chapter „Error Diagnosis and Repair“

Your personal configuration

For your personal configuration please consult the chapter „Operating Scheme“, section „Setup Menu“ of your operating instructions.

For settings to connect more than one inverter at the LocalNet (such as numbering of the bus partners connected/system upgrading) please consult the chapter LocalNet

LocalNet

System upgrading / slot-in board system

Your Conergy WR is pre-set for quite a number of system upgrades. The following system upgrades (compatible with IG Dat Com) are available or coming up soon:

- data recorder (for recording and managing photovoltaic system data on your PC) including modem connection
- Various large displays
- Actuators / Relays / Alarm
- Sensors

The system upgrades are available in slot-in boards as you have them for your personal computer. To increase flexibility, several system upgrades can be obtained also with external housing.

The LocalNet is a data network, which allows the connection of one or more Conergy WRs to the system upgrades.

The Conergy WR is prepared for four plug in cards within the housing.

Data recorder

The data recorder is the core of the LocalNet. It coordinates data transmission and ensures quick and safe distribution also of larger data volumes.

COM Card

In order to tie in the Conergy WR unit with the LocalNet, the following system upgrading is required (slot-in board)

- COM card ..... for exchanging data between your Conergy WR unit and the LocalNet, including the respective upgradings

Note! Should the data recorder collect only data of one single photovoltaic converter, a COM card is nevertheless required. In this case the COM card is needed to couple the internal network of your Conergy WR with the LocalNet interface of the data recorder.

Insert slot-in boards, Conergy WR

For inserting the system upgrade slot-in boards proceed as follows:

Warning! Hazard due to supply voltage and DC-voltage from the solar modules. Only licensed electricity installers are authorized to open the connection area and only on condition that is not under voltage.

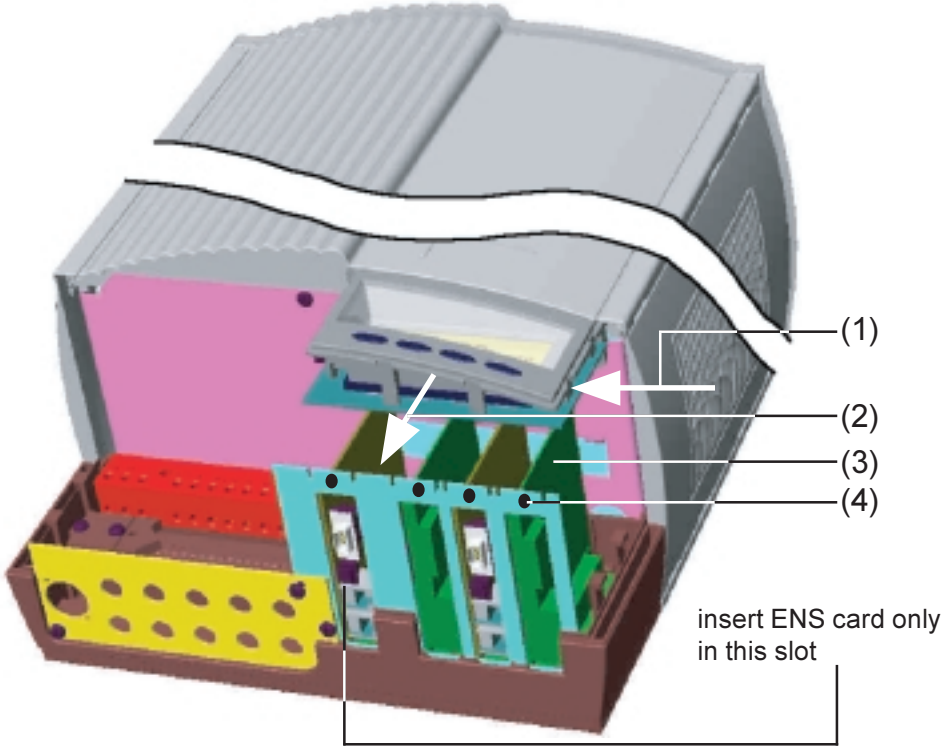

- open connection area - see chapter „Open the Housing“
- slide display towards the left side (1) and remove it from the front (2)
- loosen fastening screw and remove board slot cover

Note! In dealing with slot-in boards please observe the general ESD regulations.

- insert board (3) in any one of the slots
- tighten board (3) with fastening screw (4)

For versions for countries where the ENS card is a standard requirement, the unit will not operate without this card. Legal regulations require a safety system which does not allow operation of the Conergy WR without installation of ENS.

- power supply feeding operation can be resumed as soon as the ENS card is placed back in the slot (slot on the left outside, see illustration)

Configuration

LocalNet automatically identifies different system upgrades (data recorder, sensor card, ...)

To differentiate between several identical system upgradings, the respective units must have an individual number.

To define each Conergy WR clearly in the LocalNet, an individual number must also be allocated to each Conergy WR.

For the respective procedure, please consult the chapter „Setup Menu“ in your operating instructions.

Example

Example: Recording and archiving inverter and sensor data by means of a datalogger card and sensor box.

The cards communicate within the Conergy WR unit via its internal network. External communication (LocalNet) is effected via the COM cards. Each COM card has two RS-485 interfaces for entry and exit. Connection is effected with RJ45 plugs.

The first Conergy WR unit with COM card can be located at a distance of up to 1000 m from the last Conergy WR unit with COM card.

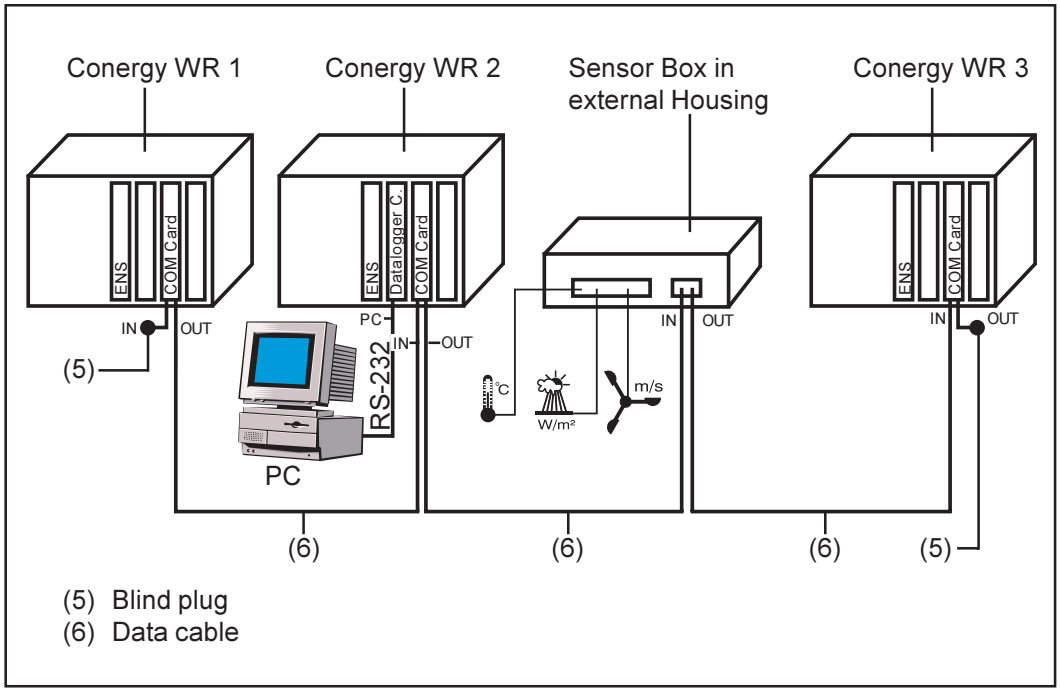

(5) Blind plug
(6) Data cable

- Equipping a Conergy WR with a datalogger card (Illustration: Conergy WR 2)
- Equipping all Conergy WRs with a COM Card

The data recorder has two RS-232 interfaces for the connection with personal computer and modem.

Example
(continued)

Note! Basically the order of sequence for placing the cards does not matter.
Important however is:
- One Conergy WR can have only **one** COM card
- One network can contain only **one** data recorder.

More information on the various system upgrade possbilities you will find in the respective operating manuals.

Status diagnosis and repair

Service-Codes Displayed

Service display

Your Conergy WR unit is equipped with a self diagnostic system which automatically identifies a large number of possible defects by itself and displays them on the screen. It is thus possible to quickly ascertain defects in the Conergy WR unit, in the photovoltaic system as well as installation and operation errors.

Whenever the self diagnostic system has identified a particular defect, the respective service code is displayed on the screen.

Note! Display of a service code for a short time may be a result of the control procedure of your Conergy WR unit. If subsequently it continues to operate normally, there has not been a case of an error.

General service codes

As long as the no load voltage of the solar modules is not sufficient, the screen displays the information „DC_{LOW}“.



As soon as the no-load voltage exceeds 150 V, the Conergy WR unit starts synchronizing the network (display shows „$SYNC_{AC}$“).

General service codes (continued)

As long as the power output at the solar modules is insufficient, the display shows the message „$POWER_{LOW}$“.



After a short time of waiting the Conergy WR resumes network synchronization (message: „$SYNC_{AC}$“).

Complete failure

Should the display remain dark for a longer period of time after sunrise you must check the no-load voltage of the solar modules.

Should the no-load voltage of the modules (at the connecting points of the Conergy WR unit) not reach 160 V, it is possibly the case of a defect in the remaining part of the photovoltaic system.

If the no-load voltage of the solar modules (at the connection points of the Conergy WR unit) amounts to more than 160 V, there may be a basic defect in the Conergy WR unit. In this case you must consult a trained service technician.

Conergy WR with several power stage sets

A special status diagnostic is run if an error occurs in a Conergy WR with several power stage sets. The examples shown below illustrate the trouble-shooting process.

Important! It is also possible to call up status messages even if there is no actual error in existence. This form of status polling may be found in the set-up menu.

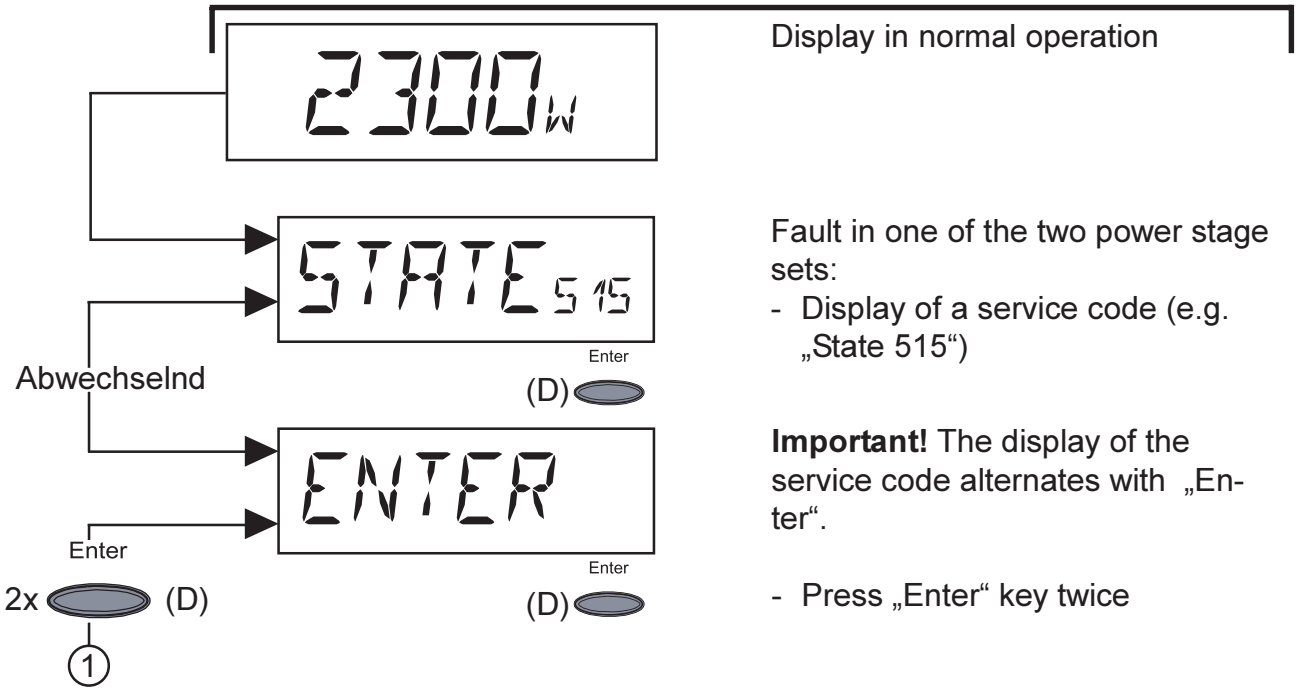

Conergy WR with several power stage sets (continued)

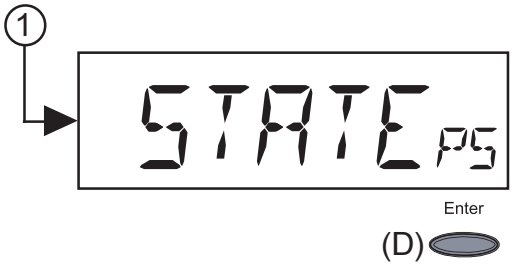

- The status display of the power stage sets „State_ PS“ appears
- Press the „Enter“ key

Important! Please see the Section entitled „The Set-Up Menu“, „STATE_PS“ for how to proceed.

Class 1



Service codes of service class 1 appear mostly only temporarily, their cause lies in the public mains network.

The first reaction of your Conergy WR unit is to disconnect from the mains. Subsequently the mains network will be checked for the duration of the observation period stipulated. If after the end of this period no further defect is identified, your Conergy WR unit resumes operating and feeding power into the mains network.

The following schedule lists a number of service codes with their respective designation, description, and repair measures.

Code	Designation	Description	Repair
101	Mains voltage not within admissible range	As soon as the mains voltage, after detailed check procedure has returned to admissible range, Conergy WR resumes feeding power into the mains network	Check mains voltage If the service code does not disappear you should contact your installation specialist
104	Mains frequency not within admissible range	As soon as mains frequency after detailed check procedure has returned to admissible range, Conergy WR resumes feeding power into the mains network	Check mains frequency If the service code does not disappear you should contact your installation specialist
107	AC mains network not available	As soon as the mains network conditions after detailed check procedure have returned to admissible range, Conergy WR resumes feeding power into the mains network	Check mains connections and fuses If the service code does not disappear you should contact your installation specialist
108	Islanding detected	Conergy WR resumes feeding power into the mains network as soon as the mains network conditions have returned to the permissible range following detailed checking procedures.	Contact your installation specialist if the service code fails to disappear.

Class 2



Service class 2 codes can only arise in connection with the ENS option.

Class 2 service codes are also related to the parameters of the mains network. Some of the checking procedures therefore overlap with those of service class 1. Your Conergy WR unwill react in the same way as in the case of service codes in service class 1.

Code	Designation	Description	Repair
201	Excessive mains voltage	As soon as the mains voltage, after detailed check, has returned to the admissible range, your Conergy WR feeding power into the mains network	Check mains voltage If the service code does not disappear, you should contact your installation specialist
202	Insufficient mains voltage	As soon as the mains voltage, after a detailed check, has returned to the admissible range, your Conergy WR feeding power into the mains network	Check mains voltage If the service code does not disappear, you should contact your installation specialist
203	Excessive mains frequency	As soon as the mains frequency, after a detailed check, has returned to the admissible range, your Conergy WR feeding power into the mains network	Check mains frequency If the service code does not disappear, you should contact your installation specialist
204	Insufficient mains frequency	As soon as the mains frequency, after a detailed check, has returned to the admissible range, your Conergy WR feeding power into the mains network	Check mains frequency If the service code does not disappear, you should contact your installation specialist
205	Imbalance of mains network impedance	As soon as the mains impedance after a detailed check, has returned to the admissible range, your Conergy WR feeding power into the mains network	Imbalance reaction can be only short termed
206	Absolute reading of mains impedance too high	As soon as the mains impedance after detailed checking, has returned to the admissible range, your Conergy WR feeding power into the mains network	Check in-house line cable cross section
207	Problems with the mains relay	ENS recognises a faulty mains relay	Check ENS-Jumper If Service-Code is displayed permanently, you should contact a trained service technician
208	Problems with the mains relay	ENS recognises a faulty mains relay	If Service-Code is displayed permanently, you should contact a trained service technician

Class 3



Service class 3 comprises service codes which may appear during operation of feeding power supply, which however basically do not cause a permanent interruption of the operation of feeding power into the mains. After automatic disconnection from the mains and monitoring of the mains as stipulated, your Conergy WR unit will try to resume the feeding operation.

Code	Designation	Description	Repair
301	overload current (AC)	Short interruption of power supply feeding into mains network caused by overload current Conergy WR resumes starting up phase	automatically by itself
			Should the service load appear permanently you should contact your installation specialist
302	overload current (DC)	Short interruption of power supply feeding into mains network caused by overload current Conergy WR resumes starting up phase	automatically by itself
			Should the service load appear permanently you should contact your installation specialist
303 *	temperature excursion AC side	Short interruption of power supply feeding into mains network caused by temperature excursion	after a two minutes' cooling phase your Conergy WR unit begins starting up again
		air vents clogged	clean air vents.
			Should the service load appear permanently you should contact your installation specialist
304 *	temperature excursion DC-side	Short interruption of power supply feeding into mains network caused by temperature excursion	after a two minutes' cooling phase your Conergy WR unit begins starting up again
		air vents clogged	clean air vents.
			Should the service load appear permanently you should contact your installation specialist

* Service code 303 and 304 are shown briefly under certain circumstances. A brief display of the service codes 303 and 304 does not mean there is a fault.

Class 4



Class 4 service codes require in some cases the intervention of a trained Conergy service technician.

Code	Designation	Description	Repair
401	no internal communication with power stage	If it is possible, your Conergy WR unit will resume the power feeding operation after successfully completing another attempt to connect	If an error code is displayed permanently, you should contact a trained service technician
402	no internal communication with ENS	If it is possible, your Conergy WR unit will resume the power feeding operation after successfully completing another attempt to connect	If Service-Code is displayed permanently, you should contact a trained service technician
403	EEPROM faulty	If it is possible, your Conergy WR unit will resume the power feeding operation after successfully completing another attempt to connect	If Service-Code is displayed permanently, you should contact a trained service technician
404	No communication possible between the control unit and ENS	If it is possible, your Conergy WR unit will resume the power feeding operation after successfully completing another attempt to connect	Conergy WR has no network connection. Check if the mains supply isolator is switched on If Service-Code is displayed permanently, you should contact a trained service technician
405	Incorrect or faulty ENS-card	If it is possible, your Conergy WR unit will resume the power feeding operation after successfully completing another attempt to connect	If Service-Code is displayed permanently, you should contact a trained service technician
406	AC temperature sensor faulty	Conergy WR disconnects from the mains supply for safety reasons	If Service-Code is displayed permanently, you should contact a trained service technician
407	DC temperature sensor faulty	Conergy WR disconnects from the mains supply for safety reasons	If Service-Code is displayed permanently, you should contact a trained service technician
408	Direct current input	Conergy WR disconnects from the mains supply for safety reasons	If Service-Code is displayed permanently, you should contact a trained service technician
409	No +15V supply available for the control electronics	Conergy WR does not switch itself onto the mains supply.	If Service-Code is displayed permanently, you should contact a trained service technician

Class 4
(continued)

Code	Designation	Description	Repair
410	Service plug was not inserted in its original position	2-pole plug inserted in the wrong socket.	If Service-Code is displayed permanently, you should contact a trained service technician
412	The setting voltage has been selected instead of the MPP-voltage operation and the setting voltage is set to too low a value.	Fixing voltage lower than the current MPP-voltage	If Service-Code is displayed permanently, you should contact a trained service technician
413	Control problems	TheConergy WR briefly disconnects from the mains supply due to changed network requirements.	If Service-Code is displayed permanently, you should contact a trained service technician
414	EEPROM faulty	Memory component triggered	If Service-Code is displayed permanently, you should contact a trained service technician
415	No ENS enabling signal	Defect in the ENS microcontroller, lead to ENS faulty	If Service-Code is displayed permanently, contact a trained service technician
416	Communication with IG-Ctrl not possible	Orange LED lights up, then the Conergy WR attempts a new start	If Service-Code is displayed permanently, contact a trained service technician
417	Two power supplies have the same Print Number	The Conergy WR blocking, red LED displays critical errors	If Service-Code is displayed permanently, contact a trained service technician
419	Two or more power supplies recognised with the identical software serial number.	The Conergy WR blocking, red LED displays critical errors	If Service-Code is displayed permanently, contact a trained service technician
420	Insufficient power supplies have been recognised after the start-up threshold has been achieved.	The Conergy WR blocking, red LED displays critical errors	If Service-Code is displayed permanently, contact a trained service technician
421	Print Number set incorrectly	The Conergy WR blocking, red LED displays critical errors	If Service-Code is displayed permanently, contact a trained service technician
425	No communication possible with the power supply.	Orange LED lights up, then the Conergy WR attempts a new start	If Service-Code is displayed permanently, contact a trained service technician
434	Earth fault detected	Earth-fault current in solar modules	Check DC-side wiring and fuse on Conergy WR

Class 5



Class 5 service codes generally do not impair the operation of feeding power into the mains network. They will be displayed so long until the service code displayed is cancelled by pressing a key (the Conergy WR unit, however, continues working normally in the background).

- press any key
- error message disappears

Code	Designation	Description	Repair
501	defective ventilator air vents blocked	In spite of insufficient power generation the temperature in the unit is too high	contact your installation specialists clean air vents
502	insufficient isolation value reading	In case of automatic monitoring of isolation by the Conergy WR unit, an isolation error against earthing has been recorded	check isolation of your photovoltaic system service code reappears: contact your installation specialist
504	communication not possible in LocalNet	Conergy WR address issued twice The LocalNet components required are in the Conergy WR unit: still, communication is possible	change Conergy WR address (chapter: “Setup Menu“) Status message goes out after the Conergy WR address is altered.
505	EEPROM faulty	Data from the Setup menu is lost	Automatic rectification
506	EEPROM faulty	Data from the „Total“ menu is lost	Automatic rectification
507	EEPROM faulty	Data from the menu „Day“ / „Year“ is lost	Automatic rectification
508	Conergy WR address is faulty	Address for data communication is no longer saved	Set address again
509	24h no feed	e.g. solar module covered in snow	e.g. remove snow from solar module
510	EEPROM faulty	SMS settings were restored to standard	If necessary, reconfigure SMS
511	EEPROM faulty	Sensor card settings were restored to standard	If necessary, reconfigure metering channels
512	Too many power supplies in the system	Too many power supplies recognised in the system	If Service-Code is displayed permanently, contact a trained service technician

Class 5
(continued)

Code	Designation	Description	Repair
514	No communication with one of the power stage sets	Warning message from one of the power stage sets, second power stage set working normally	Contact Conergy-trained service technician if service code is displayed permanently
515	Faulty plug-in connections	Temperature sensor DC/AC or DC/DC faulty, Service jumper located on „service“ plug-in station or „+15 V secondary“ not connected	Check plug-in connections
516	Status message present for one of the power stage sets	It is not possible to activate all power stage sets	Carry out analysis. Section entitled „The Set-Up Menu“, „State_PS“ for further details. Contact trained service technician if service code is displayed permanently
517	Change of master has taken place	Transformer not connected/ not plugged in	Check possible errors referred to in „Description“. If service code is displayed permanently: contact trained service technician.
		Bridge short-circuit	
		Detection of intermediate circuit voltage damaged	

Customer service

Important! Contact your Conergy dealer or trained service partner if an error not mentioned in the schedule appears frequently or permanently. Should there be any questions regarding your Conergy WR, that cannot be answered by your Conergy dealer, respectively service partner, please contact our hotline (+49 7121 144 936 1).

Annex

Technical Data

Conergy WR 1700 / 2300 / 3300

Input data	WR 1700	WR 2300	WR 3300
Recommended PV power	1300-2000 Wp	1800-2700 Wp	2500-3600 Wp
MPP-voltage range		150 - 400 V	
Max. input voltage (at 1000 W/m² / - 10°C in no-load operation)		500 V	
Max. input current	10,75 A	14,34 A	19 A

Output data	WR 1700	WR 2300	WR 3300
Nominal output power (P_{nom})	1,3 kW	1,8 kW	2,5 kW
Max. output power	1,5 kW	2,05 kW	2,65 kW
Nominal mains voltage		230 V, +10 / -15 % *	
Nominal output current	5,7 A	7,8 A	10,9 A
Nominal frequency		50 +/-0,2 Hz *	
Total harmonic distortion		< 3%	
Power factor		1	

General data	WR 1700	WR 2300	WR 3300
Maximum efficiency	94,2 %	94,5 %	94,5 %
Euro-efficiency	91,4 %	92,3 %	92,7 %
Consumption during night		0,15 W (with ENS) *	
Consumption during operation		7 W	
Cooling		controlled forced ventilation	
Protection type		IP 21	
Size l x w x h		366 x 344 x 220 mm	
Weight		9 kg	
Admissible ambient temperature (at 95% rel. humidity)		-20 ... 50 °C **	

Protection devices	WR 1700	WR 2300	WR 3300
DC-isolation monitoring		warning at R_{ISO} < 500 kOHM	
DC-excess voltage protection		integrated	
DC reverse polarity protection		integrated	
Reaction at DC-overload		shift of operating point	

*) Values given are standard. Your Conergy WR unit has been specifically adjusted in accordance with the regulations of your country.

**) The AC-output reduces (power-derating) when the ambient temperature is increased, from approx. 35 °C (dependent on the solar module voltage).

Conergy WR 4600 / 5900 / 5900 E

Input data	WR 4600	WR 5900	WR 5900E
Recommended PV power	3500-5500 Wp	4600-6700 Wp	4600-6700 Wp
MPP-voltage range		150 - 400 V	
Max. input voltage (at 1000 W/m² / - 10°C in no-load)	500 V	500 V	530 V
Max. Eingangsstrom	29,4 A	35,84 A	35,84 A

Output data	WR 4600	WR 5900	WR 5900E
Nominal output power (P_{nom})	3,5 kW	4,6 kW	4,6 kW
Max. output power	4,1 kW	5 kW	5 kW
Nominal mains voltage		230 V, +10 / -15 % *	
Nominal output current	15,22 A	20 A	20 A
Nominal frequency		50 +/-0,2 Hz *	
Total harmonic distortion		< 3%	
Power factor		1	

General data	WR 4600	WR 5900	WR 5900E
Maximum efficiency	94,5 %	94,5 %	94,5 %
Euro-efficiency	93,5 %	93,5 %	93,5 %
Consumption during night		0,15 W (with ENS) *	
Consumption during operation		12 W	
Cooling		controlled forced ventilation	
Protection type		IP 21	
Size l x w x h		610 x 344 x 220 mm	
Weight		16 kg	
Admissible ambient temperature (at 95% rel. humidity)		-20 ... 50 °C **	

Protection devices	WR 4600	WR 5900	WR 5900E
DC-isolation monitoring		warning at R_{ISO} < 500 kOHM	
DC-excess voltage protection		integrated	
DC reverse polarity protection		integrated	
Reaction at DC-overload		shift of operating point	

*) Values given are standard. Your Conergy WR unit has been specifically adjusted in accordance with the regulations of your country.

**) The AC-output reduces (power-derating) when the ambient temperature is increased, from approx. 35 °C (dependent on the solar module voltage).

Our product complies with the following standards and regulations

The Conergy WR unit complies with the „Regulation for supply and parallel operation of low voltage network power generation systems for owner's own use“ (Richtlinie für Anschluß und Parallelbetrieb von Eigenerzeugungsanlagen am Niederspannungsnetz) of VDEW, the German Association of Producers of Electric Energy (Verband der Elektrizitätswirtschaft).

In addition, all prerequisites of the applicable standards as well as regulations within the scope of the applicable EU (European Union)regulation are complied with, so that all equipment bears the CE label.

In countries with applicable regulations the Conergy WR unit is equipped with a circuit element to prevent isolated operation, as officially accepted by the German professional association „Berufsgenossenschaft für Feinmechanik und Elektrotechnik“ (professional association for precision mechanics and electricity technology) in accordance with the German standard DIN VDE 0126. This so-called ENS device is based on the principle of impedance monitoring (for of product reliability confirmation document see annex).

In the particular country versions both with as well as without ENS the monitoring and safety systems integrated in the Conergy WR as part of its standard equipment make sure that in case of a mains dropout (caused either by shutoff effected by the utility supplier or by power transmission line failure) the power supply feeding will be immediately interrupted.

In particular, the following standards and regulations are being complied with:

- EN 61000-3-2 (harmonic oscillations), EN 61000-6-2, EN 61000-6-3
- EN 50081-1 (EMV-interference emissions)
- EN 50082-2 (EMV-interference immunity)
- EN 50178 (electric safety)
- E DIN VDE 0126 (ENS:country versions with standard ENS card)
- Regulation 89/336/EEC electromagnetic compatibility
- Regulation 93/68/EECCE marking
- „Regulation for photovoltaic generation plants in parallel operation with the low voltage mains network of the utility electricity companies“, issued by VDEW, the Association of German Electric Utility Supply Companies (Vereinigung Deutscher Elektrizitätswerke).
- „Technical regulations for photovoltaic plants in parallel operation with the low voltage mains network of the electric utility companies“, issued by the Association of Electric Utility Companies of Austria (Verband der E-Werke Österreichs)
- Safety requirements for photovoltaic energy generation plants (Austrian standard ÖNORM/ÖVE E2750), as far as these regulations are applicable for the inverter.

This is the guarantee for an unproblematic and unbureaucratic authorization of operation by the distribution network operator and the electric utility supply company (for confirmity declaration documents see annex)

Warranty and Liability

Warranty terms and liability

The warranty of the general terms of business is applicable for the Conergy WR unit. For the duration of this period Conergy guarantees the proper function of your solar inverter. Should there be any defect for which Conergy is responsible, Conergy undertakes within the warranty period to carry out the factory repair free of charge. If the machine shuts down no loss of yield can be ascertained for the network power supply that has been lost.
If you need to claim under the warranty, please contact your Conergy dealer.

Warranty claims are excluded as a result of :
- use of your solar inverter and its accessory equipment for other than the intended purpose
- improper installation or installation not carried out in compliance with the applicable standards, especially if effected by electricity fitters who are not duly licensed
- operating malpractices
- operation of the Conergy WR unit when protective equipment is defective
- unauthorized modifications of the Conergy WR unit and its accessory equipment
- foreign object damage and Acts of God (force majeure)

Warranty claims will be repaired either by Conergy directly or by trained service partners of their local service organization. For return transport the equipment or components must be packed in the original packing or packing equivalent to it.

These services will be charged to the dealer or his fitter, as well as the fitting of the repaired machine.

Scope of warranty

The warranty covers only the Conergy WR unit and the options contained in the product delivered (system upgrades). The other components of the photovoltaic plant are not covered by the warranty.

Also excluded from the warranty are such damages to the Conergy WR unit which are caused by the other components of the photovoltaic plant.

Extensions to the warranty concern only the Conergy WR, not system upgrades in the form of slot-in boards.

Warranty period	60 months from date of installation. Exception: Options contained in the product delivered (system upgrades). Warranty for this components is 24 months from installation date on. A prolongation of the warranty is possible up to 10 years from date of production.
Warranty evidence	Purchase date of the invoice, date of taking over the equipment / date of commissioning and report of the energy utility supply company.

Disposal of obsolete equipment

Recycling	Should your inverter be replaced at some future date, Conergy will accept the obsolete equipment back and provide for its proper recycling.

EU-KONFORMITÄTSERKLÄRUNG 2004
EC-DECLARATION OF CONFORMITY 2004
DECLARACION DE CONFORMIDAD DE LA UNIÒN EUROPEA, 2004

Hamburg, 01.01.2004

Die Firma

Manufacturer

La empresa

Conergy AG

Anckelmannsplatz 1 | D-20537 Hamburg

erklärt in alleiniger Verantwortung, dass folgendes Produkt:

Conergy WR 1700
Solar-Wechselrichter

auf das sich diese Erklärung bezieht, mit folgenden Richtlinien bzw. Normen übereinstimmt:

Richtlinie 73/23/ EWG
Elektrische Betriebsmittel
Niederspannungsrichtlinie

Richtlinie 89/336/ EWG
Elektromag. Verträglichkeit

Richtlinie 93/68/EWG
CE Kennzeichnung

Europäische Normen
EN 50 178
EN 50 081-1
EN 50 082-2
EN 61 000-3-2+A14

Die oben genannte Firma hält Dokumentationen als Nachweis der Erfüllung der Sicherheitsziele und die wesentlichen Schutzanforderungen zur Einsicht bereit.

Hereby certifies on it´s sole responsibility that the following product:

Conergy WR 1700
Photovoltaic-inverter

which is explicitly referred to by this Declaration meet the following directives and standard(s):

Directive 73/23/ EEC
Electrical Apparatus
Low Voltage Directive

Directive 89/336/ EEC
Electromag. compatibility

Directive 93/68/EEC
CE marking

European Standard
EN 50 178
EN 50 081-1
EN 50 082-2
EN 61 000-3-2+A14

Documentation evidencing conformity with the requirements of the Directives is kept available for inspection at the above Manufacture´s.

declara por propia responsabilidad, que el siguiente producto:

Conergy WR 1700
Inversor Solar

el cual es explìcitamente referido en esta reuniòn de la declaraciòn de directorios y estàndares (normas) siguientes:

73/23/EEC directivo
Aparato Eléctrico.
Directorio de baja tensión.

89/336/EEC directivo.
Compatibilidad electromagnètica.

93/68/EEC
Marca del CE.

Stándares europeos
EN 50 178.
EN 50 081-1
EN 50 082-2
EN 61 000-3-2+A14

La documentación que evidencia la conformidad con los requisitos de los directorios se mantiene disponible para la inspección del producto anteriormente mencionado.

CE 2004

Hans-Martin Rüter
Vorstandsvorsitzender/ CEO

EU-KONFORMITÄTSERKLÄRUNG 2004
EC-DECLARATION OF CONFORMITY 2004
DECLARACION DE CONFORMIDAD DE LA UNIÒN EUROPEA, 2004

Hamburg, 01.01.2004

Die Firma | Manufacturer | La empresa

Conergy AG

Anckelmannsplatz 1 | D-20537 Hamburg

erklärt in alleiniger Verantwortung, dass folgendes Produkt:

Conergy WR 2300
Solar-Wechselrichter

auf das sich diese Erklärung bezieht, mit folgenden Richtlinien bzw. Normen übereinstimmt:

Richtlinie 73/23/ EWG
Elektrische Betriebsmittel
Niederspannungsrichtlinie

Richtlinie 89/336/ EWG
Elektromag. Verträglichkeit

Richtlinie 93/68/EWG
CE Kennzeichnung

Europäische Normen
EN 50 178
EN 50 081-1
EN 50 082-2
EN 61 000-3-2+A14

Die oben genannte Firma hält Dokumentationen als Nachweis der Erfüllung der Sicherheitsziele und die wesentlichen Schutzanforderungen zur Einsicht bereit.

Hereby certifies on it´s sole responsibility that the following product:

Conergy WR 2300
Photovoltaic-inverter

which is explicitly referred to by this Declaration meet the following directives and standard(s):

Directive 73/23/ EEC
Electrical Apparatus
Low Voltage Directive

Directive 89/336/ EEC
Electromag. compatibility

Directive 93/68/EEC
CE marking

European Standard
EN 50 178
EN 50 081-1
EN 50 082-2
EN 61 000-3-2+A14

Documentation evidencing conformity with the requirements of the Directives is kept available for inspection at the above Manufacture´s.

declara por propia responsabilidad, que el siguiente producto:

Conergy WR 2300
Inversor Solar

el cual es explìcitamente referido en esta reuniòn de la declaraciòn de directorios y estàndares (normas) siguientes:

73/23/EEC directivo
Aparato Eléctrico.
Directorio de baja tensión.

89/336/EEC directivo.
Compatibilidad electromagnètica.

93/68/EEC
Marca del CE.

Stándares europeos
EN 50 178.
EN 50 081-1
EN 50 082-2
EN 61 000-3-2+A14

La documentación que evidencia la conformidad con los requisitos de los directorios se mantiene disponible para la inspección del producto anteriormente mencionado.

CE 2004



Hans-Martin Rüter
Vorstandsvorsitzender/ CEO

EU-KONFORMITÄTSERKLÄRUNG 2004
EC-DECLARATION OF CONFORMITY 2004
DECLARACION DE CONFORMIDAD DE LA UNIÒN EUROPEA, 2004

Hamburg, 01.01.2004

Die Firma | Manufacturer | La empresa

Conergy AG

Anckelmannsplatz 1 | D-20537 Hamburg

erklärt in alleiniger Verantwortung, dass folgendes Produkt:

Hereby certifies on it´s sole responsibility that the following product:

declara por propia responsabilidad, que el siguiente producto:

Conergy WR 3300
Solar-Wechselrichter

Conergy WR 3300
Photovoltaic-inverter

Conergy WR 3300
Inversor Solar

auf das sich diese Erklärung bezieht, mit folgenden Richtlinien bzw. Normen übereinstimmt:

which is explicitly referred to by this Declaration meet the following directives and standard(s):

el cual es explìcitamente referido en esta reuniòn de la declaraciòn de directorios y estàndares (normas) siguientes:

Richtlinie 73/23/ EWG
Elektrische Betriebsmittel
Niederspannungsrichtlinie

Directive 73/23/ EEC
Electrical Apparatus
Low Voltage Directive

73/23/EEC directivo
Aparato Eléctrico.
Directorio de baja tensión.

Richtlinie 89/336/ EWG
Elektromag. Verträglichkeit

Directive 89/336/ EEC
Electromag. compatibility

89/336/EEC directivo.
Compatibilidad electromagnètica.

Richtlinie 93/68/EWG
CE Kennzeichnung

Directive 93/68/EEC
CE marking

93/68/EEC
Marca del CE.

Europäische Normen
EN 50 178
EN 50 081-1
EN 50 082-2
EN 61 000-3-2+A14

European Standard
EN 50 178
EN 50 081-1
EN 50 082-2
EN 61 000-3-2+A14

Stándares europeos
EN 50 178.
EN 50 081-1
EN 50 082-2
EN 61 000-3-2+A14

Die oben genannte Firma hält Dokumentationen als Nachweis der Erfüllung der Sicherheitsziele und die wesentlichen Schutzanforderungen zur Einsicht bereit.

Documentation evidencing conformity with the requirements of the Directives is kept available for inspection at the above Manufacture´s.

La documentación que evidencia la conformidad con los requisitos de los directorios se mantiene disponible para la inspección del producto anteriormente mencionado.

CE 2004

Hans-Martin Rüter
Vorstandsvorsitzender/ CEO

EU-KONFORMITÄTSERKLÄRUNG 2004
EC-DECLARATION OF CONFORMITY 2004
DECLARACION DE CONFORMIDAD DE LA UNIÒN EUROPEA, 2004

Hamburg, 01.01.2004

Die Firma

Manufacturer

La empresa

Conergy AG

Anckelmannsplatz 1 | D-20537 Hamburg

erklärt in alleiniger Verantwortung, dass folgendes Produkt:

Hereby certifies on it´s sole responsibility that the following product:

declara por propia responsabilidad, que el siguiente producto:

Conergy WR 4600
Solar-Wechselrichter

Conergy WR 4600
Photovoltaic-inverter

Conergy WR 4600
Inversor Solar

auf das sich diese Erklärung bezieht, mit folgenden Richtlinien bzw. Normen übereinstimmt:

which is explicitly referred to by this Declaration meet the following directives and standard(s):

el cual es explìcitamente referido en esta reuniòn de la declaraciòn de directorios y estàndares (normas) siguientes:

Richtlinie 73/23/ EWG
Elektrische Betriebsmittel
Niederspannungsrichtlinie

Directive 73/23/ EEC
Electrical Apparatus
Low Voltage Directive

73/23/EEC directivo
Aparato Eléctrico.
Directorio de baja tensión.

Richtlinie 89/336/ EWG
Elektromag. Verträglichkeit

Directive 89/336/ EEC
Electromag. compatibility

89/336/EEC directivo.
Compatibilidad electromagnètica.

Richtlinie 93/68/EWG
CE Kennzeichnung

Directive 93/68/EEC
CE marking

93/68/EEC
Marca del CE.

Europäische Normen
EN 50 178
EN 50 081-1
EN 50 082-2
EN 61 000-3-2+A14

European Standard
EN 50 178
EN 50 081-1
EN 50 082-2
EN 61 000-3-2+A14

Stándares europeos
EN 50 178.
EN 50 081-1
EN 50 082-2
EN 61 000-3-2+A14

Die oben genannte Firma hält Dokumentationen als Nachweis der Erfüllung der Sicherheitsziele und die wesentlichen Schutzanforderungen zur Einsicht bereit.

Documentation evidencing conformity with the requirements of the Directives is kept available for inspection at the above Manufacture´s.

La documentación que evidencia la conformidad con los requisitos de los directorios se mantiene disponible para la inspección del producto anteriormente mencionado.

CE 2004

Hans-Martin Rüter
Vorstandsvorsitzender/ CEO

EU-KONFORMITÄTSERKLÄRUNG 2004
EC-DECLARATION OF CONFORMITY 2004
DECLARACION DE CONFORMIDAD DE LA UNIÒN EUROPEA, 2004

Hamburg, 01.01.2004

Die Firma | Manufacturer | La empresa

Conergy AG

Anckelmannsplatz 1 | D-20537 Hamburg

erklärt in alleiniger Verantwortung, dass folgendes Produkt:

Conergy WR 5900
Solar-Wechselrichter

auf das sich diese Erklärung bezieht, mit folgenden Richtlinien bzw. Normen übereinstimmt:

Richtlinie 73/23/ EWG
Elektrische Betriebsmittel
Niederspannungsrichtlinie

Richtlinie 89/336/ EWG
Elektromag. Verträglichkeit

Richtlinie 93/68/EWG
CE Kennzeichnung

Europäische Normen
EN 50 178
EN 50 081-1
EN 50 082-2
EN 61 000-3-2+A14

Die oben genannte Firma hält Dokumentationen als Nachweis der Erfüllung der Sicherheitsziele und die wesentlichen Schutzanforderungen zur Einsicht bereit.

Hereby certifies on it´s sole responsibility that the following product:

Conergy WR 5900
Photovoltaic-inverter

which is explicitly referred to by this Declaration meet the following directives and standard(s):

Directive 73/23/ EEC
Electrical Apparatus
Low Voltage Directive

Directive 89/336/ EEC
Electromag. compatibility

Directive 93/68/EEC
CE marking

European Standard
EN 50 178
EN 50 081-1
EN 50 082-2
EN 61 000-3-2+A14

Documentation evidencing conformity with the requirements of the Directives is kept available for inspection at the above Manufacture´s.

declara por propia responsabilidad, que el siguiente producto:

Conergy WR 5900
Inversor Solar

el cual es explìcitamente referido en esta reuniòn de la declaraciòn de directorios y estàndares (normas) siguientes:

73/23/EEC directivo
Aparato Eléctrico.
Directorio de baja tensión.

89/336/EEC directivo.
Compatibilidad electromagnètica.

93/68/EEC
Marca del CE.

Stándares europeos
EN 50 178.
EN 50 081-1
EN 50 082-2
EN 61 000-3-2+A14

La documentación que evidencia la conformidad con los requisitos de los directorios se mantiene disponible para la inspección del producto anteriormente mencionado.

CE 2004



Hans-Martin Rüter
Vorstandsvorsitzender/ CEO

EU-KONFORMITÄTSERKLÄRUNG 2005
EC-DECLARATION OF CONFORMITY 2005
DECLARACION DE CONFORMIDAD DE LA UNIÒN EUROPEA, 2005

Hamburg, 15.02.2005

Die Firma

Manufacturer

La empresa

Conergy AG

Anckelmannsplatz 1 | D-20537 Hamburg

erklärt in alleiniger Verantwortung, dass folgendes Produkt:

Hereby certifies on it´s sole responsibility that the following product:

declara por propia responsabilidad, que el siguiente producto:

Conergy WR 5900E

Solar-Wechselrichter

Conergy WR 5900E

Photovoltaic-inverter

Conergy WR 5900E

Inversor Solar

auf das sich diese Erklärung bezieht, mit folgenden Richtlinien bzw. Normen übereinstimmt:

which is explicitly referred to by this Declaration meet the following directives and standard(s):

el cual es explìcitamente referido en esta reuniòn de la declaraciòn de directorios y estàndares (normas) siguientes:

Richtlinie 73/23/ EWG
Elektrische Betriebsmittel
Niederspannungsrichtlinie

Directive 73/23/ EEC
Electrical Apparatus
Low Voltage Directive

73/23/EEC directivo
Aparato Eléctrico.
Directorio de baja tensión.

Richtlinie 89/336/ EWG
Elektromag. Verträglichkeit

Directive 89/336/ EEC
Electromag. compatibility

89/336/EEC directivo.
Compatibilidad electromagnètica.

Richtlinie 93/68/EWG
CE Kennzeichnung

Directive 93/68/EEC
CE marking

93/68/EEC
Marca del CE.

Europäische Normen
EN 50 178
EN 50 081-1
EN 50 082-2
EN 61 000-3-2+A14

European Standard
EN 50 178
EN 50 081-1
EN 50 082-2
EN 61 000-3-2+A14

Stándares europeos
EN 50 178
EN 50 081-1
EN 50 082-2
EN 61 000-3-2+A14

Die oben genannte Firma hält Dokumentationen als Nachweis der Erfüllung der Sicherheitsziele und die wesentlichen Schutzanforderungen zur Einsicht bereit.

Documentation evidencing conformity with the requirements of the Directives is kept available for inspection at the above Manufacture´s.

La documentación que evidencia la conformidad con los requisitos de los directorios se mantiene disponible para la inspección del producto anteriormente mencionado.

CE 2005

Hans-Martin Rüter
Vorstandsvorsitzender/ CEO

Fachausschuss Elektrotechnik
der Berufsgenossenschaftlichen Zentrale
für Sicherheit und Gesundheit – BGZ
des Hauptverbandes der gewerblichen Berufsgenossenschaften

BG
Federführung:
Berufsgenossenschaft
der Feinmechanik
und Elektrotechnik

Fachausschuss Elektrotechnik, Postfach 51 05 80, 50941 Köln

Conergy AG
Anckelmannsplatz 1

20537 Hamburg

Ihre Zeichen/Nachricht vom	Unser Zeichen (Bitte stets angeben)	Bearbeiter	☎ (02 21) 37 78-	Datum
	UB.010.17	PI/Ow	6312	28.01.2005

Unbedenklichkeitsbescheinigung

Erzeugnis:	Selbsttätige wirkende Freischaltstelle (ENS)
Typ:	ENS 25
Bestimmungsgemäße Verwendung:	Selbsttätig wirkende, dem EVU unzugängliche Schaltstelle mit Trennfunktion, als gleichwertiger Ersatz für eine jederzeit dem EVU zugängliche Schaltstelle mit Trennfunktion. Die ENS ist integrierter Bestandteil der netzgetrennten Photovoltaik-Wechselrichter: Conergy WR 1700, WR 2300, WR 3300, WR 4600, WR 5900, WR 5900 E
Prüfgrundlage:	
E DIN VDE 0126 (04.99)	"Selbsttätige Freischaltstelle für Eigenerzeugungsanlagen einer Nennleistung ≤ 4,6 kVA und einphasiger Paralleleinspeisung über Wechselrichter in das Netz der öffentlichen Versorgung (ENS)"

Das am 14.09.1995 geprüfte Sicherheitskonzept des o.g. Erzeugnisses, entspricht den zum Zeitpunkt der Ausstellung dieser Bescheinigung geltenden sicherheitstechnischen Anforderungen für die aufgeführte bestimmungsgemäße Verwendung.

Die Unbedenklichkeitsbescheinigung gilt befristet bis

31.12.2007

- Mehlem -
Leiter der Prüf- und
Zertifizierungsstelle

VDEW-ERKLÄRUNG

Die Firma:

Conergy AG
Anckelmannsplatz 1
20537 Hamburg

erklärt hiermit, dass die

Photovoltaik-Wechselrichter:

- **Conergy WR 1700**
- **Conergy WR 2300**
- **Conergy WR 3300**
- **Conergy WR 4600**
- **Conergy WR 5900**
- **Conergy WR 5900E**

folgenden für den Netzparallelbetrieb geltenden Vorschriften entsprechen:

- **„Richtlinie für den Parallelbetrieb von Photovoltaik-Eigenerzeugungsanlagen mit dem Niederspannungsnetz" der VDEW.**
- **„Technische Richtlinien für den Parallelbetrieb von Photovoltaik-Eigenerzeugungsanlagen mit dem Niederspannungsnetz des Elektrizitätsversorgungsunternehmen" des Verbandes der E-Werke Österreichs.**

Die Wechselrichter Conergy WR 1700/2300/3300/4600/5900/5900E erfüllen die Bedingungen einer selbstständig wirkenden Freischaltstelle, bestehend aus zwei voneinander unabhängigen, diversitären, parallelen Einrichtungen zur Netzüberwachung mit jeweils zugeordnetem Schaltorgan in Reihe (ENS), wie sie vom Hauptverband der gewerblichen Berufsgenossenschaft festgelegt und in beiliegender Bestätigung für die Wechselrichter geprüft wurden.

Hamburg, 2005-02-15

Conergy AG

Hans-Martin Rüter
Vorstandsvorsitzender, CEO

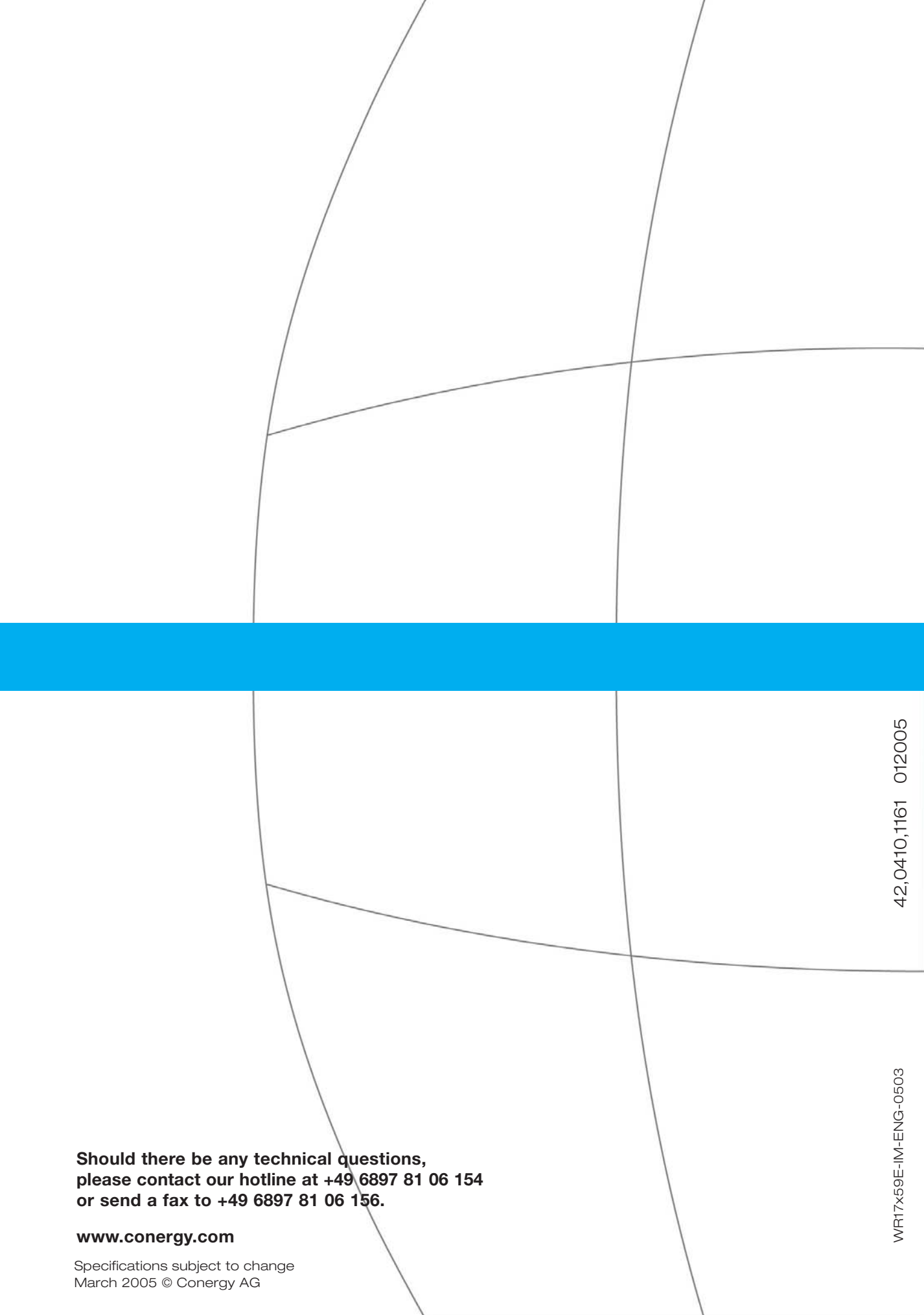

42,0410,1161 012005

WR17x59E-IM-ENG-0503

**Should there be any technical questions,
please contact our hotline at +49 6897 81 06 154
or send a fax to +49 6897 81 06 156.**

www.conergy.com

Specifications subject to change
March 2005 © Conergy AG