VOLTWERK
outperforming the sun

Voltwerk **VC 200, 300, 350**

Central Inverter 200, 300, 350 kVA - transformerless



- Deployable throughout Europe thanks to preset norms and directives
- Large temperature range of –20 to +50 °C
- Maximum efficiency factor of 98.7 % guarantees maximum yields
- Maximal availability thanks to overdimensioning of critical components

The new inverters of the Voltwerk VC series are characterised by high efficiency and reliability in all grid situations. They comply with all requirements related to interference resistance and operation security. The large temperature range as well as simple handling and commissioning make the VC series the ideal solution for large power plants throughout Europe.

Efficiency factor and reliability

The optimum adjustment of electronic control unit, applied materials and components permit an extremely high efficiency factor even at lowest input powers. With a maximum system efficiency factor of 98.7 % (European efficiency factor 98.5 %) the VC inverters are the most efficient ones in their class. By use of aging resistant film capacitors and generously laid-out threshold values for the specification of the individual components this series also guarantees highest reliability.

High ease of use

The integrated VGA touch display with intuitive navigation allows immediate display of the current operating status and a comfortable adjustment of grid and control values. The integrated webserver enables easy access to the central inverter via the internet. For the connection of further monitoring systems a CAN bus is available.

Low installation costs

The novel concept of the VC series supersedes the assignment of combiner boxes, as DC circuit breakers are already integrated into the device. This leads to cost savings and a reduced planning and installation effort. The VC series comes with an integrated earthing kit including pre-fuses for the use of thin film modules. The ground fault monitoring both for positive and negative earthing is done by the inverter control. Positive or negative earthing is monitored by the inverter control.

Safety First

In addition to high reliability and best efficiency factors the security of both the operating personnel and the power plant are top priorities. Therefore all Voltwerk products bear the GS-seal and are certified by Bureau Veritas. However, if critical situations should arise, these are detected and terminated at an early stage by different tracing algorithms, One example is the disconnection of the DC input at high input voltages.

Device

Input values (solar generator)	**VC 200** (Item no. V1-120-013)	**VC 300** (Item no. V1-120-012)	**VC 350** (Item no. V1-120-023)
Recommended DC power	220 kWp	330 kWp	385 kWp
Maximum DC power	260 kWp	360 kWp	400 kWp
Min. (V_{dcmin}) / Max. DC input voltage (V_{dcmax})	530 V / 1,000 V	530 V / 1,000 V	580 V / 1,000 V
Start-up input voltage ($V_{dcstart}$)	580 V	580 V	640 V
Rated input voltage ($V_{dc,r}$)	540 V	540 V	600 V
Min. (V_{mppmin}) / Max. MPP voltage (V_{mppmax})	530 V / 800 V	530 V / 800 V	580 V / 800 V
Maximum input current (I_{pcmax})	400 A	590 A	650 A
Max. short circuit current	800 A	800 A	800 A
Feed-in from	1,800 W	1,800 W	1,800 W
Number of MPP trackers	1	1	1
Connection design	M 12 bolts on copper bar	M 12 bolts on copper bar	M 12 bolts on copper bar
Number of inputs	4	4	4
MPP precision	≥ 99.9 %	≥ 99.9 %	≥ 99.9 %
Fuse per input (device internal, thermical)	175 to 250A (adjustable)	175 to 250A (adjustable)	175 to 250A (adjustable)
Output data (grid)			
Rated grid voltage ($V_{ac,r}$)[1]	300 V	300 V	315 V
Min. (V_{acmin}) / Max. grid voltage (V_{acmax})[1]	240 V / 360 V	240 V / 360 V	252 V / 378 V
Recommended DC output (kWp) / Short circuit voltage	400 A	590 A	650 A
Short circuit voltage factor	1	1	1
AC Rated power ($S_{ac,r}$)	200 kVA	300 kVA	350 kVA
Maximum Power (S_{acmax})	200 kVA	300 kVA	350 kVA
Rated frequency (f)	50 Hz / 60 Hz	50 Hz / 60 Hz	50 Hz / 60 Hz
Min. (f_{min}) / Max. frequency (f_{max})	45 Hz / 65 Hz	45 Hz / 65 Hz	45 Hz / 65 Hz
Power factor (cos φ)	Adjustable 0.7 ind. to 0.7 cap.	Adjustable 0.7 ind. to 0.7 cap.	Adjustable 0.7 ind. to 0.7 cap.
Required grid type	IT grid	IT grid	IT grid
Distortion factor (at rated capacity)	≤ 3 %	≤ 3 %	≤ 3 %
Connection design	M 12 bolts on copper bar	M 12 bolts on copper bar	M 12 bolts on copper bar
Feed-in type	3-phase rotary current	3-phase rotary current	3-phase rotary current
Max. possible DC into AC	≤ 0,5 %	≤ 0,5 %	≤ 0,5 %
System efficiency factor			
Maximum efficiency factor[2]	98.7 %	98.7 %	98.7 %
European efficiency factor[2]	98.3 %	98.5 %	98.5 %
Californean efficiency factor[2]	98.6 %	98.6 %	98.6 %
Auxiliary supply			
Power consumption (P_{day})[3]	100 W to 920 W	100 W to 920 W	100 W to 920 W
Stand-by performance / nighttime performance (P_{night})	≤ 100 W	≤ 100 W	≤ 100 W
Energy demand during 8 hours at 25 °C[4]	3.8 kWh	4.2 kWh	4.4 kWh
Data of auxiliary supply	230 V -10% / +15% (acc. to EN 50160) / 50Hz / TN grid (L1, N, PE)		
Buffer time in case of grid outage	≥ 1 s	≥ 1 s	≥ 1 s
Required pre-fuse	B16A	B16A	B16A
Terminal type	Spring-type 1.5 to 2.5 mm²	Spring-type 1.5 to 2.5 mm²	Spring-type 1.5 to 2.5 mm²

[1] Voltage between phases
[2] At DC and AC rated voltage and Cos φ 1 without involvment of auxiliary power
[3] Thermal regulated fans
[4] Values only for your information. Depends on plant. region and thermal situation

Voltwerk VC Serie

Cooling	**VC 200** (Item no. V1-120-013)	**VC 300** (Item no. V1-120-012)	**VC 350** (Item no. V1-120-023)
Cooling type	Forced air cooling with thermal regulation		
Necessary air flow	4,000 m³/h	4,000 m³/h	4,000 m³/h
Sum of maximum counterpressure	70 pa	70 pa	70 pa
Necessary air quailty	Cooling air must be filtered with filters type G3 or G4 according EN 779		
Environmental / ambient conditions			
Temperature range[5]	–20 to +50 °C	–20 to +50 °C	–20 to +50 °C
Maximum temperature for permanent rated capacity	+ 50 °C	+ 50 °C	+ 45 °C
Relative humidity (non-condensing)	0–95 %	0–95 %	0–95 %
Installation altitude above sea level	≤ 2,000m	≤ 2,000m	≤ 2,000m
Place of installation	Interior	Interior	Interior
Noise emission	< 85 dB	< 85 dB	< 85 dB
Safety / protective equipment			
Protection type	IP 20 in accordance with EN 60529		
Protection class	Class I in acc. with EN 61140	Class I in acc. with EN 61140	Class I in acc. with EN 61140
Ground fault monitoring on PV-input	Yes, with adjustable reaction type		
Earthing options	Earthing kit including pre-fuse is integrated		
DC overvoltage protection	Automatic disconnection	Automatic disconnection	Automatic disconnection
Overload	Working point adjustment	Working point adjustment	Working point adjustment
Excess temperature	Derating	Derating	Derating
Decoupling PV-Generator - Grid	none, galvanic insulation is done by the MV-Transformer		
Surge protection PV input	Type II acc. to IEC 61643-1	Type II acc. to IEC 61643-1	Type II acc. to IEC 61643-1
Surge protection AC output	Type I / II acc. to IEC 61643-1	Type I / II acc. to IEC 61643-1	Type I / II acc. to IEC 61643-1
Surge protection auxiliary supply	Typ II and Typ III according to IEC 61643-1		
Grid monitoring			
Pre-configured standards for grid monitoring[6]	VDE 0126-1-1, ENEL, RD661, RD1565, RD1663, EN50438:2007, ÖVE E 2750, BDEW MV-guideline		
Dimensions / Weight			
Dimensions (W x H x D)[7]	1,600 x 1,800 x 800 mm	1,600 x 1,800 x 800 mm	1,600 x 1,800 x 800 mm
Weight	1,250 kg	1,250 kg	1,250 kg
Standards			
Transient emissions (EMC)	DIN EN 61000-6-4:2007-09	DIN EN 61000-6-4:2007-09	DIN EN 61000-6-4:2007-09
Interference resistance (EMC)	DIN EN 61000-6-2:2006-03	DIN EN 61000-6-2:2006-03	DIN EN 61000-6-2:2006-03
Grid quality	DIN EN 61000-3-11:2001-04 / DIN EN 61000-3-12:2005-09		
Equipment reliability	DIN EN 50178:1998-04	DIN EN 50178:1998-04	DIN EN 50178:1998-04
CE-conformity	Yes	Yes	Yes
GS approval	Yes	Yes	Yes
Conformity with German Renewable Energies Act § 6,1 EEG 2009 §6.1	Yes	Yes	Yes
Conformity with MV Directive (BDEW) of June 2008	Yes (additional equipment might be necessary)		
Miscellaneous			
Display	Touch-Display, VGA, 65536 colours		
Monitoring	Data logger with 2 GB storage capacity		
Interface	CAN, Ethernet		
Language	German, English, Spanish, Italian, French, Greek		

[5] Between –10°C and –20°C the display may work restrictedly
[6] Related to shut-down values (voltage/frequency); deviation from listed standards are possible in terms of additional requirements. Further approvals and certificates of non-objection on www.voltwerk.com
[7] Incl. transp. packaging 200mm higher & plus 100mm in length and wide of inverters; Height w. installed fan 2,000 mm

Voltwerk VC Serie

Efficiency curves with different input voltages[8]

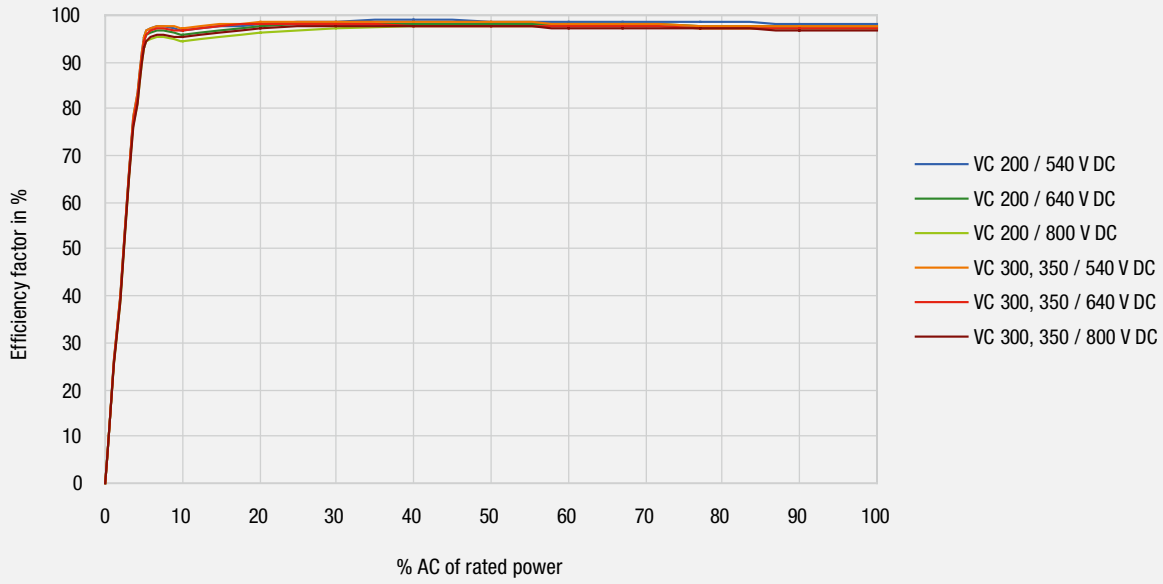

	VC 200			VC 300			VC 350		
P_r	540 VDC	640 VDC	800 VDC	540 VDC	640 VDC	800 VDC	540 VDC	640 VDC	800 VDC
5 %	94.0 %	92.0 %	90.0 %	96.0 %	93.8 %	91.1 %	96.0 %	93.8 %	91.1 %
10 %	97.0 %	95.0 %	93.0 %	97.8 %	96.6 %	95.4 %	97.8 %	96.6 %	95.4 %
20 %	97.8 %	96.6 %	95.4 %	98.5 %	97.7 %	96.8 %	98.5 %	97.7 %	96.8 %
25 %	98.0 %	97.0 %	96.0 %	98.6 %	97.8 %	97.0 %	98.6 %	97.8 %	97.0 %
30 %	98.5 %	97.7 %	96.8 %	98.6 %	97.9 %	97.3 %	98.6 %	97.9 %	97.3 %
50 %	98.7 %	98.1 %	97.5 %	98.7 %	98.1 %	97.6 %	98.7 %	98.1 %	97.6 %
75 %	98.7 %	98.1 %	97.6 %	98.7 %	98.1 %	97.6%	98.7 %	98.1 %	97.6 %
100 %	98.7 %	98.1 %	97.7 %	98.7 %	98.1 %	97.7 %	98.7 %	98.1 %	97.7 %

Internal layout

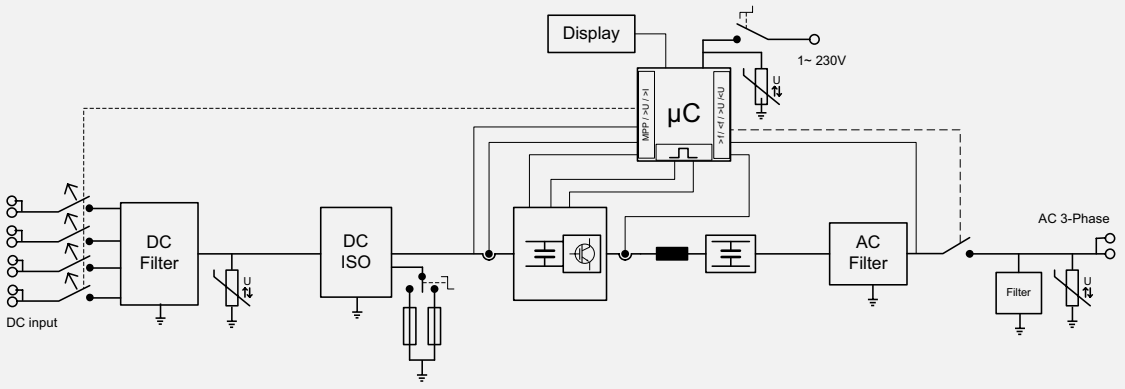

[8] With AC rated tension, Cos φ = 1 and external auxiliary supply

voltwerk electronics GmbH
Anckelmannsplatz 1
20537 Hamburg/Germany
info@voltwerk.com
www.voltwerk.com

Available at:

Td_Vo_Vc200_300_350_DeEnItFr_1205 | Subject to technical modification without notice | 2012©voltwerk electronics GmbH