AE 3TL 333 kW

Central inverters for all terrains



- Low-maintenance
- DC up to 1,500 V
- Easy installation

The three-phase central inverter AE 3TL 333 kW makes no compromises: It is designed for performance. On the DC side it takes in from 500 V up to 1,500 V; its efficiency is 98.4 %. In large outdoor systems on industrial roofs or in fields the AE 3TL 333 kW stands for high yields, operational security, and low installation costs. It needs no additional housing and, thanks to its low weight for its performance class of around 850 kilograms and its compact dimensions, it can be easily transported to the site and intended position without special transport measures. That leaves you a great deal of flexibility when it comes to choosing the position, even on difficult terrain. The AE 3TL 333 kW also promises additional cost advantages, as it can be combined with 690 V standard transformers from the wind energy industry. Don't accept any compromises when it comes to performance and yields either.

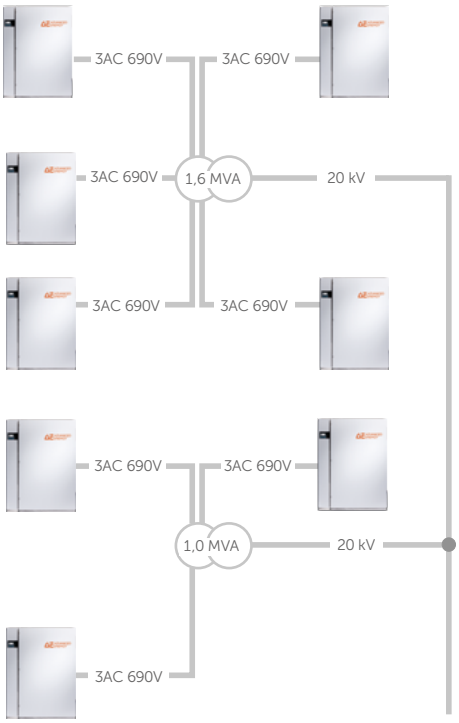



1 MW

TECHNICAL DATA	AE 3TL 333
Art. no.	830R333
DC DATA	
Recommended max. PV power, kWp	375
MPPT range, V	610 ... 1,200
DC start voltage, V	500
Max. voltage DC, V	1,500
Max. current DC, A	610
MPP trackers	1
Number of DC inputs	4
Disconnection system DC	DC relay
AC DATA	
Rated AC power, kVA	333
Max. power AC, kW	333
AC grid connection	L1, L2, L3, PEN
Nominal power factor / range	1 / 0.9i ... 0.9c
Nominal voltage AC, V	690
Voltage range AC, V	586 ... 759
Nominal frequency, Hz	50, 60
Max. current AC, A	3 x 280
Disconnection system AC	Main contactor
Max. THD, %	< 3
Max. efficiency, %	98.4
European efficiency, %	98.0
Feed-in starting at, kW	0.6
Self consumption in night operation, W	0
CHARACTERISTICS	
Cooling	Temperature controlled air cooling
Ambient temperature, °C	-20 ... +55
Relative ambient humidity, %	0 ... 100
Site altitude, m above sea level	4,000*
Noise, dBA	< 70
Internal overvoltage protection (EN 61643-11)	Type 1 + 2
Protection class (IEC 62103)	SKL I
Environmental classification (IEC 721-3-4)	4K4H
Certification	Current certificates can be found on our website
GENERAL DATA	
Interfaces	Ethernet, RS485, CAN master
Type of protection (IEC 60529)	IP55
Dimensions W x H x D, mm	1,230 x 1,610 x 810 (without base)
Weight, kg	850

* Pay attention to the max. DC voltage.

Subject to modification. Technical specifications are subject to change without notice.

REFUsol GmbH | Uracher Straße 91 | 72555 Metzingen | Germany | Tel. +49 7123 969-0 | Fax +49 7123 969-165 | info@refusol.com