

KACO new energy.

blueplanet gridsave 92.0 TL3-S
blueplanet gridsave 110 TL3-S
blueplanet gridsave 137 TL3-S

M; L; XL - Grid Support Interactive Inverter

Manual

■English translation of German original

⚠ Authorized electrician

Important safety instructions

These instructions form part of the product and must be carefully read, observed and stored in a place which is freely accessible at all times.

EN-US

Legal provisions

The information contained in this document is the property of KACO new energy GmbH. Publication of this document, in whole or in part, is subject to the written consent of KACO new energy GmbH. .

KACO warranty

For current warranty conditions contact your system integrator.

Definitions on product designations

In this Manual, the product "Grid Support Utility Interactive Inverter" is referred to as "device" for ease of reading.

Trademarks

All trademarks are recognised, even if not explicitly identified as such. A lack of identification does not mean that a product or designation/logo is free of trademarks.

Software

This device contains open source software developed by third parties and in some cases licensed under GPL and/or LGPL.

More details on this topic and a list of the open source software used, as well as the corresponding licence texts, can be found in the web interface information display under "Licence List".

KACO new energy.

EN-US

Bidirectional feed-in inverter

Table of contents

1 General information 4
1.1 About this document 4
1.2 More information 4
1.3 Layout of Instructions 4
1.4 Identification 5
1.5 Warnings on the device 6
1.6 Target group 6

2 IMPORTANT SAFETY INSTRUCTIONS 7
2.1 SAVE THESE INSTRUCTIONS 7
2.2 Intended use 9
2.3 Protection features 10

3 Device description 12
3.1 Function 12
3.2 Structure of the device 12
3.3 Plant layout 13

4 Technical data 14
4.1 Electrical data 14
4.2 General data 14
4.3 Accessories 15

5 Transportation and Delivery 16
5.1 Scope of delivery 16
5.2 Transporting the unit 16
5.3 Installation tools 16

6 Assembly and preparation 17
6.1 Selecting an installation location 17
6.2 Unpacking the unit 18
6.3 Fastening the mount 19
6.4 Installing and securing the device 20

7 Installation 22
7.1 Opening the device 22
7.2 Surveying the connection area 22
7.3 Making the electrical connections 22
7.4 Connecting the device to the mains supply 24
7.5 Connecting the battery to the device 25
7.6 Inserting the overvoltage protection 27
7.7 Creating equipotential bonding 27
7.8 Connecting the interfaces 27
7.9 Sealing the connection area 30

8 Start-up 31
8.1 Conditions 31
8.2 Start-up options 31

9 Configuration and operation 35
9.1 Initial start-up 35
9.2 Signal elements 36
9.3 User interface 38
9.4 Menu structure 41
9.5 Monitoring the device 64
9.6 Carry out firmware update 65
9.7 Access via Modbus 66

10 Specifications 67
10.1 Reactive power control 67
10.2 Regulating active power 74
10.3 FRT 80
10.4 Other grid support functions effective on active power 83
10.5 Advanced islanding detection 85

11 Maintenance and troubleshooting 87
11.1 Visual inspection 87
11.2 Cleaning 87
11.3 Replacing the fans 88
11.4 Shutting down for maintenance / troubleshooting 90
11.5 Replace DC fuse 90
11.6 Faults 90
11.7 Fault messages 92

12 Decommissioning and removal 93
12.1 Switching off the device 93
12.2 Disconnecting the connections 93
12.3 Uninstalling the device 93
12.4 Removing the device 93
12.5 Packaging the device 94
12.6 Storing the device 94

13 Disposal 95

14 Service 96

15 Appendix 97

EN-US

1 General information

1.1 About this document



⚠ WARNING

Improper handling of the device can be hazardous!

1. You must read and understand the manual in order to install and use the device safely.

Other applicable documents

During installation, observe all assembly and installation instructions for components and other parts of the system. These instructions also apply to the equipment, related components and other parts of the system.

Some of the documents which are required to register your system and have it approved are included with the manual.

English translation of German original

This document has been produced in several languages. The German-language version is the original version. All other language versions are translations of the original version.

This document is valid for the following types of device from firmware version V3.64 onwards

Typenbezeichnung *[KACO Art. Nr.]*	BLUEPLANET GS 92.0 TL3-S B1 WM OD IIGM	[1001912]
	BLUEPLANET GS 92.0 TL3-S B1 WM OD IIGL	[1001910]
	BLUEPLANET GS 92.0 TL3-S B1 WM OD IIGX	[1001911]
	BLUEPLANET GS 110 TL3-S B1 WM OD IIKM	[1002020]
	BLUEPLANET GS 110 TL3-S B1 WM OD IIKL	[1002021]
	BLUEPLANET GS 110 TL3-S B1 WM OD IIKX	[1002022]
	BLUEPLANET GS 137 TL3-S B1 WM OD IIPM	[1002014]
	BLUEPLANET GS 137 TL3-S B1 WM OD IIPL	[1002013]
	BLUEPLANET GS 137 TL3-S B1 WM OD IIPX	[1002012]

1.2 More information

Links to more detailed information can be found at www.kaco-newenergy.com

Document title	Type of document
Technical data sheet	Product flyer
Modbus protocol	Application note (EN)
SunSpec information model reference SunSpec information model reference KACO	Excel files for software version with application note “Modbus protocol” under https://kaco-newenergy.com/downloads/
Software package	Files for current software
EU Declaration of Conformity Country-specific certificates Module-specific certification	Certification

1.3 Layout of Instructions

1.3.1 Symbols used

	General hazard		Fire and explosion hazard
	Electrical voltage		Risk of burns
	Earthing - ground conductor		

EN-US

1.3.2 Guide to safety instructions

⚠ DANGER

Immediate danger

Failure to observe this warning will lead directly to serious bodily injury or death.

⚠ WARNING

Potential danger

Failure to observe this warning may lead to serious bodily injury or death.

⚠ CAUTION

Low-risk hazard

Failure to observe this warning will lead to minor or moderate bodily injury.

⚠ CAUTION

Risk of damage to property

Failure to observe this warning will lead to property damage.

1.3.3 Additional information symbols

NOTE

Useful information and notes

Information that is important in relation to a specific topic or objective but is not related to safety.

1.3.4 Layout of action steps

↻ Pre-requisite for the action

1. Carry out first action step
2. Next action step

   ⇨ Intermediate outcome of the action step

⇨ Final outcome

1.4 Identification

You will find the name plate with the following data for service and other requirements specific to installation on the right side panel of the product:

- Product name
- Part no.
- Serial number
- Date of manufacture
- Technical data



Fig. 1: Name plate

EN-US

1.5 Warnings on the device

A warning sticker is affixed to the device. Read the warnings carefully.

Do not remove the sticker. If the sticker is missing or is illegible, please contact a KACO representative or distributor.

– Article number: 3013153



Fig. 2: Warning sticker

1.6 Target group

All activities described in the document may only be carried out by specially trained personnel with the following qualifications:

– Knowledge on the function and operation of a bidirectional feed-in inverter
– Knowledge of the modbus specifications
– Knowledge of the SunSpec modbus specifications
– Training in the handling of hazards and risks during the installation and operation of electrical units and plants.
– Education concerning the installation and start-up of electrical units and plants.
– Knowledge of applicable standards and directives.
– Knowledge and adherence to this document with all safety notices.

EN-US

2 IMPORTANT SAFETY INSTRUCTIONS



⚠ DANGER

Lethal voltages are still present in the connections and cables of the device even after the device has been switched off and disconnected!

If the load on the DC side is disconnected (e.g. by shutting down the battery), the device does not shut down. DC voltage is still present at the connections. Severe injuries or death may occur if the cables and/or terminals/busbars in the device are touched.

1. Comply with all safety regulations and current technical connection specifications of the responsible power supply company.
2. The device is only permitted to be opened or serviced by a qualified electrician.
3. Switch off the grid voltage by turning off the external circuit breakers.
4. Check that all AC and DC cables are completely free of current using a clip-on ammeter.
5. For work on the device, ensure complete isolation from the power supply on the AC and DC connections.
6. Do not touch the cables and/or terminals/busbars when switching the device on and off.
7. An AC and DC-side disconnecter unit must be provided during the final installation stage.
8. Do not make any modifications to the device.
9. Keep the device closed when in operation.

The electrician is responsible for observing all existing standards and regulations. The following applies:

- Keep unauthorised persons away from the device and/or system.
- Ensure operational safety by providing proper grounding, conductor dimensioning and appropriate protection against short circuiting.
- Observe all safety instructions on the product and in these operating instructions.
- Switch off all voltage sources and secure them against being inadvertently switched back on before performing visual inspections and maintenance.
- When taking measurements on the live device:
  - Do not touch the electrical connections
  - Remove all jewellery from wrists and fingers
  - Ensure that the testing equipment is in safe operating condition.
- Modifications to the surroundings of the device must comply with the applicable national and local standards.
- When working on the battery, it is also necessary to switch off the DC voltage with the DC isolator switch in addition to disconnection from the grid.

2.1 SAVE THESE INSTRUCTIONS



⚠ DANGER

Risk of fatal injury due to fire or explosions

Fire caused by flammable or explosive materials in the vicinity of the device can lead to serious injuries.

1. Do not mount the device in an area at risk of explosion or in the vicinity of highly flammable materials.



⚠ DANGER

Risk of fatal injury due to electric shock!

When connecting the batteries and installing supply lines, arcs may occur that may cause serious injury and property damage.

1. Insert internal fuse before connecting the DC voltage.
2. Repair damage to the DC line without delay.
3. Batteries must be fitted with potential equalisation in protection class I and with double-insulated DC cable in protection class II.

EN-US



⚠ DANGER

Risk of fatal injury due to electric shock!

Severe injuries or death may result from improper use of the interface connections and failure to observe protection class III.

1. The SELV circuits (SELV: safety extra low voltage) can only be connected to other SELV circuits with protection class III.



⚠ DANGER

Risk of fatal injury due to electric shock!

Touching damaged insulation on the grid and battery connection leads results in severe injury or death.

1. Check the connection leads for damage.
2. All signal cables for interfaces must be correctly encased up to the connection using the insulation tube provided before fitting the cable.



⚠ DANGER

Lethal voltages are still present in the connections and cables of the device even after the device has been switched off and disconnected!

Severe injuries or death may occur if the cables and/or terminals/busbars in the device are touched.

1. The device is only permitted to be put into operation by a specialist.
2. Unauthorized persons must not be able to access the device.



⚠ DANGER

Dangerous voltage due to two operating voltages

Severe injuries or death may occur if the cables and/or terminals/busbars in the device are touched. The discharge time of the capacitors is up to 5 minutes.



1. Only appropriately qualified electricians authorized by the mains supply network operator are permitted to open and maintain the device.
2. Before opening the device: Disconnect the AC and DC side and wait at least 5 minutes.



⚠ WARNING

Hazard when using unsuitable fixing materials!

If unsuitable fixing materials are used, the device could fall and persons in front of the device may be seriously injured.

1. Use only fixing materials that are suitable for the mounting base. The fastening materials supplied are only to be used for masonry and concrete.
2. Only install the device in an upright hanging position.



⚠ WARNING

Risk of burns from hot housing components

Housing components could heat up during operation.

1. Only touch the housing cover of the device during operation.

EN-US

⚠ CAUTION

Hazard due to impact; risk of breakage to the device!

1. Pack the device securely for transport.
2. Transport the device using the intended carrying handles of the packaging box.
3. Do not expose the device to any shocks.

⚠ CAUTION

Property damage due to gases that have an abrasive effect on surfaces when they come into contact with ambient humidity caused by weather conditions!

The housing of the device may be seriously damaged by gases (ammonia, sulfur, etc.) if it comes into contact with ambient humidity caused by weather conditions.

1. If the device is exposed to gases, it must be installed in a location that is visible.
2. Perform regular visual inspections.
3. Immediately remove any moisture from the housing.
4. Ensure that there is sufficient ventilation at the installation location.
5. Immediately remove dirt, especially on vents.
6. Failure to observe these instructions may result in damage to the device which is not covered by the warranty.

⚠ CAUTION

Damage to property due to condensation build-up

If the device is pre-assembled, moisture can get into the internal area via the dust-proof screw connections. The condensate that forms can cause damage to the device during installation and start-up.

✓ Keep the device sealed during pre-assembly and don't open the connection area until installation.

1. Seal off any screw fittings using sealing covers.
2. Check the interior space for any condensation water prior to electrical installation and, if necessary, allow it to dry out sufficiently.
3. Immediately remove any moisture from the housing.

⚠ CAUTION

Damage to the device from electrostatic discharge

Components inside the unit can be damaged beyond repair by static discharge.

1. Observe the ESD protective measures.
2. Earth yourself before touching a component by touching a grounded object.

NOTE

There are components within the housing that may only be repaired by our customer service team.

1. Do not attempt to rectify faults that are described here (in the troubleshooting chapter). Contact our Customer Service department. Only carry out maintenance activities that are described here.
2. Log each maintenance activity in the "Service" menu item: "Service Log" (exception: "user" interface) [See section 9.4.2 Page 42]
3. The device should be checked for proper operation by a qualified electrician at regular intervals and if you experience problems, you should always contact the system manufacturer's Service department.

2.2 Intended use

The device has been developed for use with a battery system. The device converts the DC voltage provided by the battery into AC voltage, so that it can be fed into the grid or the battery can be charged. The device is built using state-of-the-art technology and in accordance with the recognised safety rules.

EN-US

The device is intended for indoor and outdoor applications and may only be used in countries for which it has been approved or for which it has been released by KACO new energy and the grid operator. [1]

Nevertheless, improper use may cause lethal hazards for the operator or third parties, or may result in damage to the device and other property. This relates to the following operation and connection:

- Operate the device only with a permanent connection to the public power grid.
- The requirements of the grid operator must be met for grid connection to take place. The permission of the relevant authorities may also be required in order to secure authorisation to connection to the grid.
- The enclosed documentation is an integral part of the product. The documentation must be read, observed and stored in a place which is freely accessible at all times.
- Operation in accordance with the appended EU Declaration of Conformity envisages up to 2 bidirectional feed-in inverters per battery.
- Approval from KACO new energy is required for a parallel DC circuit with more than 2 bidirectional feed-in inverters.

Any other or additional use is not considered proper or intended use and can lead to an annulment of the product guarantee. This includes:

- Mobile use
- Use in rooms where there is a risk of explosion
- Use of the device in direct sunlight, rain or a storm or other harsh environmental conditions
- Use in an outdoor area that does not meet the environmental conditions set down in the Environmental data
- Operation of devices with an inconsistent performance in DC parallel operation
- Operation of devices with an inconsistent firmware version in DC parallel operation
- Operation outside the specifications intended by the manufacturer
- Overvoltage of over 1,500V on the DC connection
- Modifying the device
- Off-grid operation.

2.3 Protection features

The following monitoring and protection functions are integrated in the device:

- Overvoltage conductor/varistor to protect the power semiconductors from high-energy transients on the grid and generator side
- Device temperature monitoring system
- EMC filter to protect the inverter from high-frequency grid interference
- Grid-side varistors grounded to earth to protect the product against Burst- und Surgeimpulsen
- Anti-islanding detection according to the current standards.

NOTE

Application in a coordinated system setup

Information on other applications / system set ups (e.g. parallel operation / multiple bidirectional feed-in inverter) is provided project specific as an application note. For further details, please contact our KACO sales team pv-projects.kaco.de@siemens.com.

[1] **WARNING! The device is not intended for use in residential areas and cannot ensure adequate protection of radio reception in such environments.**

NOTE

Overvoltage conductors / varistors influence the insulation resistance test when the device is connected

If the device is connected, the overvoltage conductors / varistors contained in the device have an impact on the electrical system insulation resistance test as per HD 60364-6 / IEC 60364-6 Low-voltage installations- Part 6: Verification.

IEC 60364-6 6.4.3.3 describes two options for this case. The first option is to disconnect devices with an overvoltage conductor or, if this is not practicable, then the test voltage can be reduced to 250 V.

EN-US

3 Device description

3.1 Function

An external EMS/PMS [2] is required to operate the device. The EMS/PMS must be provided by the customer/system integrator. Modbus TCP is the sole means of communication with the device.

The necessary commands and data points are described in the SunSpec Protocol description [See section 1.1 Page 4].

The shutdown threshold (DC-Min.) is dynamically determined by the device on the basis of the current grid voltage. After shutting down the device, it is therefore not possible to guarantee reconnection as there may be a change in the grid voltage.

3.2 Structure of the device

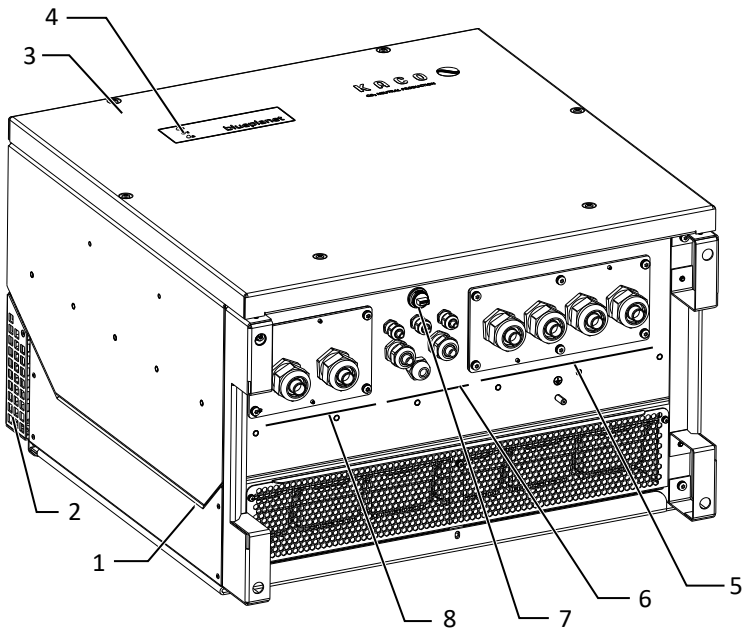

Fig. 3: Device diagram

key

1	Housing	5	AC-Connection/ cable feed-through
2	Cover	6	interface / cable feed-through
3	Status indicator	7	Communication - button / USB port
4	Upper cover	8	DC connection / cable feed-through

3.2.1 Electrical functions

A potential-free relay contact is integrated into the device. Use this contact for one of the following functions:

Fault signal relay

The potential-free relay contact closes as soon as there is a fault during operation. You use this function, for example, to signal a fault visually or acoustically.

3.2.2 Interfaces

You can configure the interfaces and the web server in the Settings menu. The device has the following interfaces for communication and remote monitoring.

Ethernet interface

Communication with the EMS/PMS is carried out via the Ethernet interface.

The local web server can be used to configure the device and perform updates.

[2] Energy management system/power management system

EN-US

USB interface

The device's USB connection is a type A socket. It is located on the communication circuit board. The USB connection is specified to draw 500 mA of power.

Use the USB interface to read out stored operating data, load firmware updates or device configurations using a FAT32-formatted USB stick (max. 4GB).

A connection to the unit's internal web server can be established via a plugged-in USB WiFi stick. In addition to commissioning, service information and firmware updates, more extensive configurations are also possible via the web interface.

3.3 Plant layout

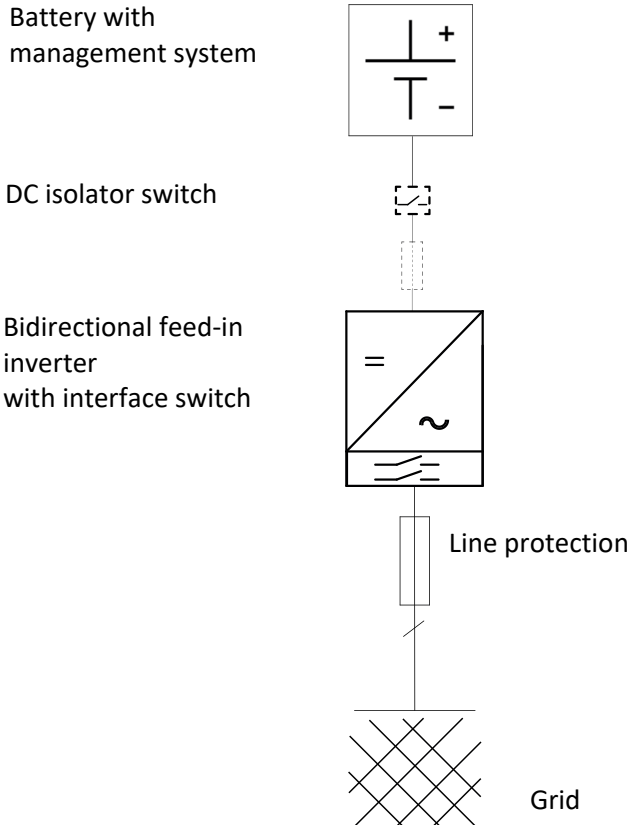

Fig. 4: Circuit diagram for a system with one bidirectional feed-in inverter

Key	Definition / information on the connection
Battery	Intrinsically safe battery system
DC isolator switch	An external DC isolator switch is required outside the device; this can also be integrated into the battery housing.
Bidirectional feed-in inverter	The connection from the battery unit is carried out on the device's DC connection.
Line protection	Safety fuse or circuit breaker.

EN-US

4 Technical data

4.1 Electrical data

DC input data	92.0 TL3-S	110 TL3-S	137 TL3-S
Working range [3]	668 - 1,315 V	801 - 1,315 V	1,002 - 1,315 V
Max. DC voltage [3]	1.315 V		
Starting voltage	668 V	801 V	1.002 V
Nominal PV current (Inom)	145 A		
Max. PV current (ISC max.)	300 A		
Polarity safeguard	option / with PCU yes		
String fuse	M yes / L yes / XL yes		
DC- fuse holder	no		
DC+ fuse holder	Optional		
Number of strings	1		

AC output data	92.0 TL3-S	110 TL3-S	137 TL3-S
Rated power @ nominal voltage (x KVA@30°C/40°C/50°C)	92 kVA	110 kVA	137 kVA
Nominal voltage	400 V (3P+PE)	480 V (3P+PE)	600 V (3P+PE)
Voltage range: continuous operation	300 V - 580 V		480 V - 760 V
Max. voltage range (up to 100 s)	625 V		825 V
Nominal current	3 x 132.3 A		
Max. continuous current	3 x 132.3 A		
Contribution to peak short-circuit current ip	193 A		
Initial short-circuit alternating current (Ik" first single-period effective value)	137 A		
Short circuit current continuous (max output fault current)	134 A		
Inrush current	5 A [RMS (20ms)]		
Nominal frequency	50/60 Hz		
Frequency range	45 - 65 Hz		
Reactive power	0-100 % Snom		
cos phi	0.3 - 1 ind/cap		
Number of feed-in phases	3		
Distortion factor (THD)	< 3 %		<3 %
Overvoltage protection	Base		
Ik / Ik(100) / Ik''			

4.2 General data

	92.0 TL3-S	110 TL3-S	137 TL3-S
General data			
Display	LEDs		
Control elements	Button / web server		
Menu languages	EN; DE; FR; IT; ES; PL; NL; PT; CZ; HU; SL; TR; RO; JP		

[3] For country setting UD and IL the working range can be increased to 1450 V.See table : Configuration via web user interface [▶ Page 59]

EN-US

	92.0 TL3-S	110 TL3-S	137 TL3-S
Interfaces	2 x Ethernet, INV OFF, Error-Relais (30V potential free contact)		
Communication	TCP/IP, Modbus TCP based on Sunspec / RS485 (KACO protocol)		
Fault signal relay	yes		
DC isolator switch	no		
AC isolator switch	no		
Cooling	Temp. controlled fan, max. air flow rate 364 m³/h		
Number of fans	3x outside, 1x inside		
Noise emission	<60 db(A)		
Housing material	AL		
HxWxD	28,93 In x 27.56 In x 18.03 In		
Weight	167 lbs (M) x 178 lbs (L) x 180 lbs (XL)		
Precharge unit	L + XL		
DC load relay +	L + XL		
DC load relay -	XL		
DC fuse	M + L + XL		
Max. power dissipation to room air	4 kW		
Safety	EN 62109-1, EN 62109-2		
Interference immunity/ interference emission/ grid feedback	EN 61000-6-2 / 62920 -Class A, EN55011 - Class A / EN61000-3-11, EN 61000-3-12		
*	Compliant with IEEE 1547a-2014 (Amd. 1)”		
Certifications	Overview: see homepage, download area		

	92.0 TL3-S	110 TL3-S	137 TL3-S
Max. efficiency	Charge 98.51 / discharge 98.69 %	Charge 98.6 / discharge 98.78 %	Charge 98.74 / discharge 98.89 %
CEC efficiency	n.a. %		
Self consumption: Standby	< 8 / <14 with PCU Relay closed		
Transformer			
DC parallel operation	yes, 2		
Operating mode	Grid-dependent (charge/discharge)		
Battery type	All intrinsic battery types, e.g. lithium ions		
Protection class / over voltage category	I / III		
Clock frequency	48 kHz		
Grid monitoring	Country-specific		
Distribution system	TN-C system, TT system, Solid grounded wye		

4.3 Accessories

	92.0 TL3-S	110 TL3-S	137 TL3-S
Precharge unit	L + XL		
DC fuse	M + L + XL		
DC load relay -	XL		
DC load relay +	L + XL		

EN-US

5 Transportation and Delivery

Every product leaves our factory in perfect electrical and mechanical condition. Special packaging ensures that the devices are transported safely. The shipping company is responsible for any transport damage that occurs.

5.1 Scope of delivery

- Bidirectional feed-in inverter
- Mount
- Installation kit
- Manual [online] / Quickguide [multi-language]

Checking the scope of supply

1. Inspect your device thoroughly.
2. Immediately notify the shipping company in case of the following:
   - Damage to the packaging that indicates that the device may have been damaged.
   - Obvious damage to the device.
3. Send a damage report to the shipping company immediately.
4. The damage report must be received by the shipping company in writing within 6 days following receipt of the device. We will be glad to help you if necessary.

5.2 Transporting the unit

⚠ CAUTION

Hazard due to impact; risk of breakage to the device!

1. Pack the device securely for transport.
2. Transport the device using the intended carrying handles of the packaging box.
3. Do not expose the device to any shocks.

For safe transportation of the product, use the hand recesses in the carton.

Device version	Dimensions HxWxD	Total weight including packaging
92.0TL3-137TL3-S- WM OD IIG**M**	32,67 inch x 30,70 inch x 21,65 inch	176 lbs
92.0TL3-137TL3-S - WM OD IIG**L**		183 lbs
92.0TL3-137TL3-S - WM OD IIG**XL**		185 lbs

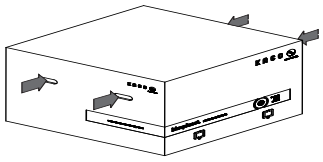

Fig. 5: Transporting the device

5.3 Installation tools

The abbreviations listed in the following table are used when referring to the tools and tightening torques to be used in all assembly/installation/maintenance and disassembly instructions.

Shortsign (en)	Shape of the connector
W	External hex
A	Internal hex
T	Torx
S	Slot

Tab. 1: Key and description of tool codes

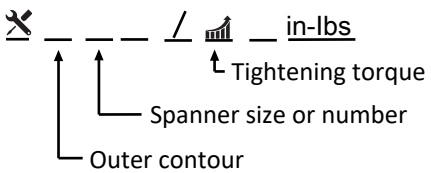

Fig. 6: Presentation format

EN-US

6 Assembly and preparation

6.1 Selecting an installation location

⚠ DANGER

Risk of fatal injury due to fire or explosions

Fire caused by flammable or explosive materials in the vicinity of the device can lead to serious injuries.

1. Do not mount the device in an area at risk of explosion or in the vicinity of highly flammable materials.

⚠ CAUTION

Property damage due to gases that have an abrasive effect on surfaces when they come into contact with ambient humidity caused by weather conditions!

The housing of the device may be seriously damaged by gases (ammonia, sulfur, etc.) if it comes into contact with ambient humidity caused by weather conditions.

1. If the device is exposed to gases, it must be installed in a location that is visible.
2. Perform regular visual inspections.
3. Immediately remove any moisture from the housing.
4. Ensure that there is sufficient ventilation at the installation location.
5. Immediately remove dirt, especially on vents.
6. Failure to observe these instructions may result in damage to the device which is not covered by the warranty.

NOTE

Access by maintenance personnel for service

Any additional costs arising from unfavorable structural or mounting conditions shall be billed to the customer.

Installation space

- As dry as possible, climate-controlled, the waste heat must be dissipated away from the device.
- Unobstructed air circulation.
- Close to the ground, accessible from the front and sides without requiring additional resources.
- In outdoor areas, KACO new energy recommends protecting the device from direct weather exposure and sunlight. Realisation through constructional measures (e.g. wind catchers) in order to reduce thermal heating of the components, earlier derating and greater wear of the fans.

Installation surface

- Must have adequate load-bearing capacity
- Must be accessible for installation and maintenance
- Must be made out of heat-resistant material (up to 194 °F)
- Flame-retardant
- Minimum clearances to be observed during installation: [See figure 12 [Page 19]

EN-US

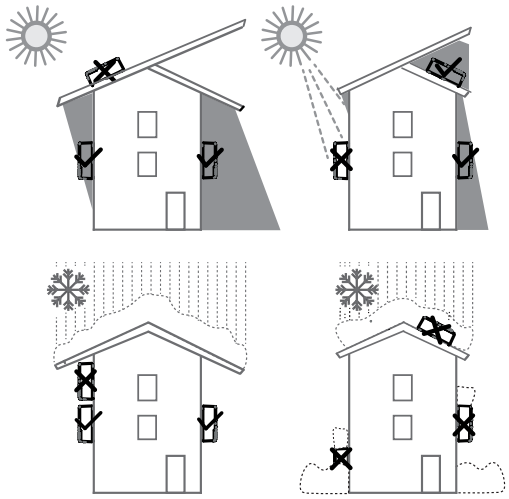

Fig. 7: Device for outdoor installation

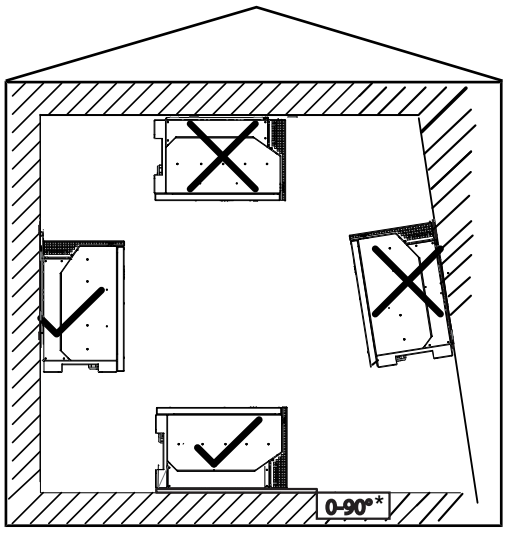

Fig. 8: Permissible installation location
***Note for 0-90°**: At **0-10°** use is only permitted indoors or with the installation of an appropriate rain cover.

6.2 Unpacking the unit

⚠ CAUTION

Risk of injury if the body is overloaded!

Lifting the device for transportation, to change location and during installation can lead to injuries (e.g. spinal injuries).

1. Only lift the device using the openings provided.
2. The device must be transported and installed by at least 2 persons.

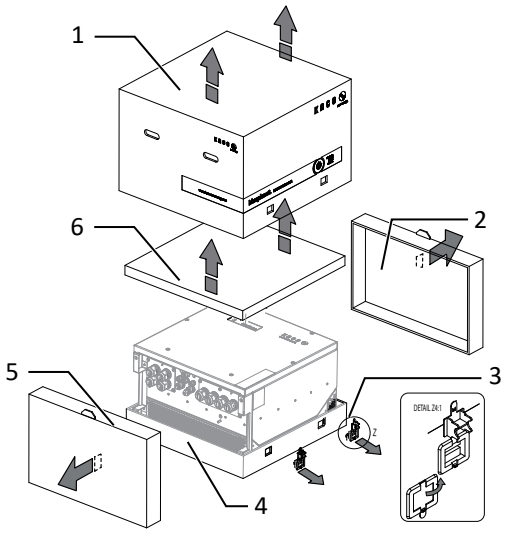

Fig. 9: Opening the cardboard packaging

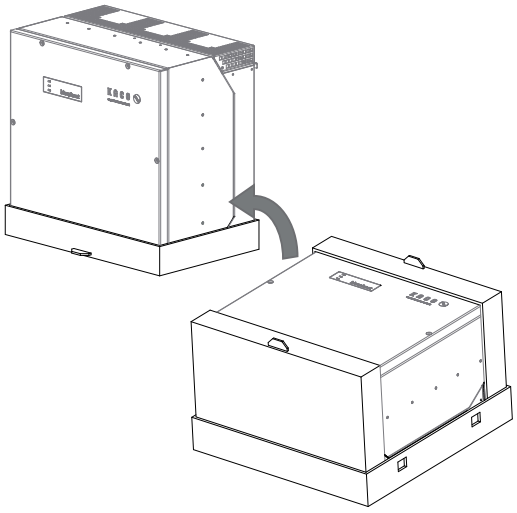

Fig. 10: Setting the device upright

Legend			
1	Hood	4	Base section
2	Upper side section	5	Lower side section
3	Clip lock (4x)	6	Cardboard packaging with mount and mounting kit

↻ The device is transported to the installation location.

1. Remove the plastic strap from the pallet and packaging.
2. Pull the clip lock off the packaging.
3. Pull the hood upwards to remove it and place the cardboard packaging to one side together with the mount and accessories.
4. Set the device upright with the base section and side sections.

EN-US

5. Remove the uppermost side section and base section from the device.

⇨ If the device is in the correct installation position: Proceed with the installation of the mount.

6.3 Fastening the mount

⚠ WARNING

Hazard when using unsuitable fixing materials!

If unsuitable fixing materials are used, the device could fall and persons in front of the device may be seriously injured.

1. Use only fixing materials that are suitable for the mounting base. The fastening materials supplied are only to be used for masonry and concrete.
2. Only install the device in an upright hanging position.

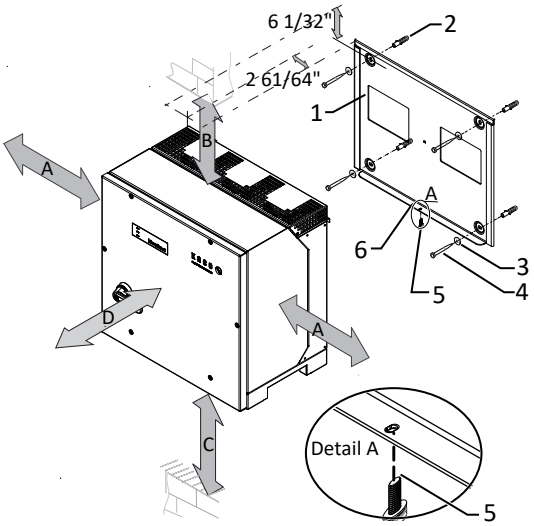

Fig. 11: Minimum clearances for wall mounting

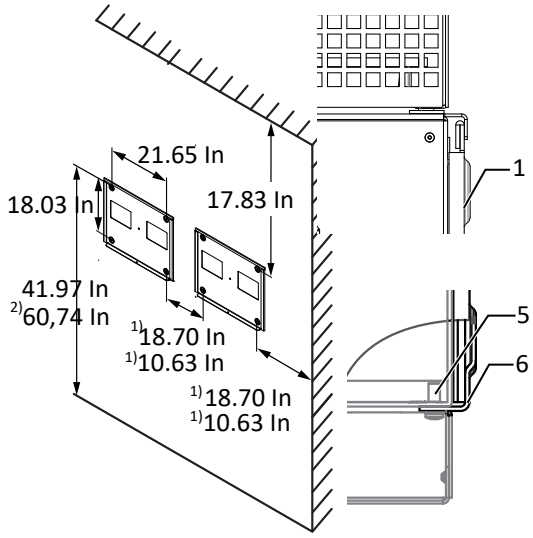

Fig. 12: Wall mounting

Legend			
1	Mount	4	Screw for mounting (4x) [SW 13 / [See section 6.3 Page 19]]
2	Fastening anchors [S12-Ø0.47 In / 0,98 In]	5	Securing screw (1x)
3	Lock washer	6	Lug to mount the device
A	Minimum clearance: 4.72 In	1)	Minimum clearance excluding device:10.63 In
	Recommended clearance: 15.75 In	1)	Recommended clearance excluding device:18.70 In
B	Minimum clearance: 11.81 In	-	-
C	Minimum clearance: 19.69 In	-	-
D	Recommended clearance: 39.37 In	2)	Recommended clearance with DC breaker:60,74 In

↻ Cardboard packaging with mount and mounting kit removed from the packaging and opened.

1. Check condition and minimum room height according to specified dimensional data.
2. Mark the suspension position on the wall surface according to the bore holes in mounting plate.

. **NOTE: The minimum clearances between two devices, or the device and the ceiling/floor have already been taken into account in the diagram.**

3. Fix the mount to the wall using suitable mounting fixtures from the mounting kit.

. **NOTE: Make sure that the mount is oriented correctly.**

⇨ Proceed with the installation of the device.

EN-US

6.4 Installing and securing the device

⚠ CAUTION

Risk of injury from improper lifting and transport.

Lifting the device improperly can cause the device to topple and fall over.

1. Only ever raise the device vertically using the openings provided.
2. Use a climbing aid for the chosen installation height.
3. Wear safety gloves and safety shoes when lifting and lowering the device.

NOTE

Power reduction due to heat accumulation!

If the recommended minimum clearances are not observed, the device may go into power regulation mode due to insufficient ventilation and the resulting heat build-up.

1. Observe the minimum clearances and provide for sufficient heat dissipation.
2. Any objects on the housing of the device must be removed prior to operation.
3. Make sure that foreign objects cannot hinder heat dissipation following installation of the device.

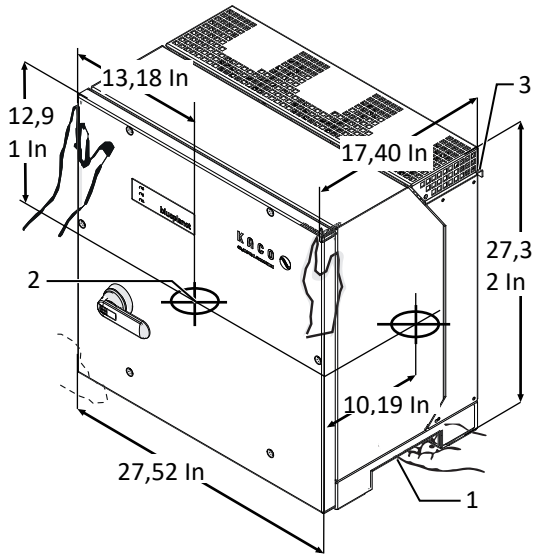

Fig. 13: Lift the device using the opening

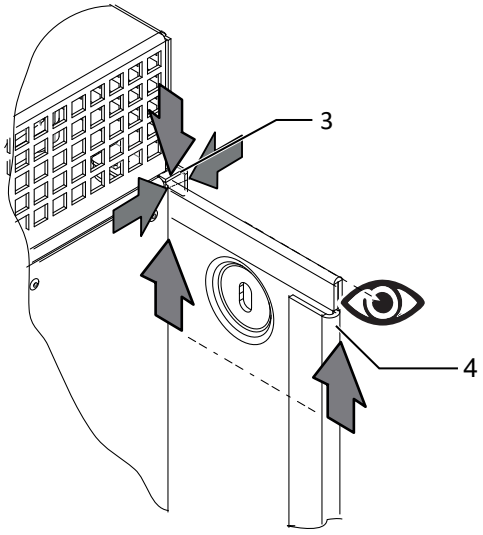

Fig. 14: Fitting the device onto the mount

Legend			
1	Opening	3	Mounting bracket
2	Center of gravity	4	Mount

Lifting and mounting the device

↻ The mount has been installed.

1. Lift the device using the lateral openings. Have regard to the position of the device's center of gravity!

. **NOTE: Do not lift the device by the lid or cover!**

2. Fit the device onto the upper mount by means of the mounting bracket. Fit the device onto the lower mounting bracket in full so that the device sits flush with its rear side on the mount. ([See figure 12 [▶ Page 19]).
3. Insert the screw provided into the lug of the mount and [T30 / 17.70 In-lbs] ([See figure 11 [▶ Page 19]).

. **NOTE: Alternatively: At this point, the screw mentioned above can be replaced with a special-purpose screw for protection against theft.**

⇨ The device is installed. Proceed with the electrical installation.

EN-US

⚠ CAUTION

Damage to property due to condensation build-up

If the device is pre-assembled, moisture can get into the internal area via the dust-proof screw connections. The condensate that forms can cause damage to the device during installation and start-up.

✓ Keep the device sealed during pre-assembly and don't open the connection area until installation.

1. Seal off any screw fittings using sealing covers.
2. Check the interior space for any condensation water prior to electrical installation and, if necessary, allow it to dry out sufficiently.
3. Immediately remove any moisture from the housing.

EN-US

7 Installation

7.1 Opening the device

↻ The device has been installed on the mount.
↻ Wipe any moisture off the frame of the housing cover using a cloth.

☞ Undo the 6 screws (2) and carefully remove the housing cover (1) [T_25]

☞ Be careful not to damage or soil the seals or optical fibers when setting the housing cover down.

⇨ Proceed with the installation of the device.

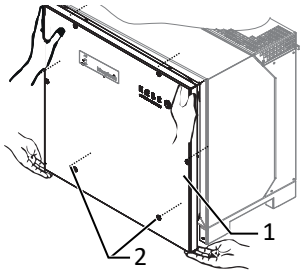

Fig. 15: Remove housing cover

7.2 Surveying the connection area

The connection point for the AC supply is situated inside the housing. The DC input source is also connected inside the housing.

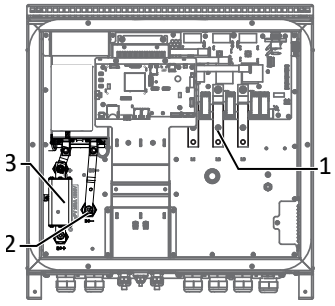

Fig. 16: Connection area M-Version

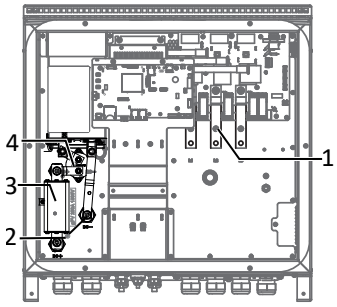

Fig. 17: Connection area L-Version

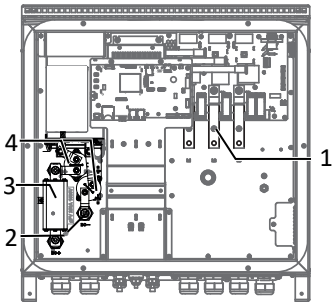

Fig. 18: Connection area XL-Version

Legende			
1	AC connection point	3	DC fuse with connection point
2	DC connection point	4	DC load relay(for precharge unit)

7.3 Making the electrical connections

NOTE

Select the cable cross-section, fuse type and fuse value in accordance with the following master conditions

Country-specific installation standards; power rating of the device; cable length; type of cable installation; local temperatures.

NOTE

All electrical installations must be carried out in accordance with local electrical standards and conform to the National Electrical Code® ANSI / NFPA 70 or the Canadian Electrical Code® CSA C22.1.

This document does not replace any local, federal or national laws, regulations or regulations that apply to the installation and use of the product, and is not intended to replace them, including the applicable electrical safety regulations.

All installations must conform to the laws, regulations and standards that are applicable in the country of installation. KACO new energy does not assume any responsibility for compliance or lack of compliance with such laws or codes in connection with the installation of the product.

EN-US

NOTE

Specification of the DC fuse

Due to the fact that the device is unable to limit the short circuit current from the grid in the event of a short circuit, the AC-side fuse in the installation (on-site) provides protection against faults on the DC side.

For device safety, the max. prospective DC current is limited by the internal DC fuse in the event of an error. Specification of the DC fuse (F1):

- 250Adc nominal current
- Nominal voltage (DC) > max. battery voltage
- Breaking capacity: 30kA

Use of e.g. Bussmann EATON PV-250A-2XL-3BU-15 (1500Vdc).

7.3.1 Supply line and fuse requirements

AC-Seitig	
Max. cable cross-section	450 kcmil
Min. cable cross-section	acc. to local installation standards
Diameter of cable for cable fitting	0,63 - 1,10 inch
Length of insulation to be stripped off	Depending on the cable lug
Cable lug Ø connection bolt	Bore for M10 screw
Tightening torque	265.52 In-lbs
Connection type	Cable lug (use the appropriate cable lug depending on the cable material!)
Cable lug dimension w - maximum width	1,65 inch
Ground conductor connection	M10
Ground conductor connection tightening torque	88.5 In-lbs
Fuse protection for installation provided by customer (max output overcurrent protection)	max. 250A
Fitting for AC connection	M40
Torque for cable fitting	88.5 In-lbs

DC-side	
Max. cable cross-section	450 kcmil
Min. cable cross-section	acc. to local installation standards
Diameter of cable for cable fitting	0,63 - 1,10 inch
Cable lug dimension b width max.	1,65 inch
Length of insulation to be stripped off	Depending on the cable lug
Recommended cable type	Solar cable
Cable lug Ø connection bolt	Bore for M10 screw
Tightening torque	265.50 In-lbs
Fitting for DC connection	M40
Torque for cable fitting	88.5 In-lbs

Interfaces	
Diameter of cable for cable fitting	(2x) 0,31 - 0,67 inch
Torque for cable fitting	44.25 In-lbs
RS485 connection type	spring-type terminal
RS485 terminal cable cross-section	23 - 15 AWG
Diameter of cable for cable fitting	(3x) 0,19 - 0,39 inch
Torque for cable fitting	22 In-lbs
Ethernet connection type	RJ45

EN-US

7.4 Connecting the device to the mains supply

⚠ WARNING

IP66 (IEC 60529) not guaranteed!

Ingress of condensation, dust or vermin can lead to short-circuiting/overheating or even failure of the device.

1. Tighten **all** cable/sealing plug/housing screw connections to the **specified torques**.
2. If cable glands are not used, the sealing plugs must be retained with the specified torques.

7.4.1 Preparing the grid connection

↻ Time required for AC connection: 30 minutes

↻ The nominal grid voltage matches the “VAC nom” value on the nameplate.

1. Loosen the cable gland for the AC connection and PE grounding (Ground) [W_46].
2. Remove the sealing plugs.
3. Insert the AC cables through the cable glands.
4. Strip the AC cables.
5. Strip the individual wires for L1 / L2 / L3 (ABC) and PE (Ground), so that the strands and insulation can be pressed into the cable lug sleeve.

. **CAUTION! Risk of fire due to chemical corrosion. Cable lugs must be suitable for the conductor material and copper busbars being used.** [4]

6. Press the cable lug.
7. Slide heat-shrink tubing (not included) over the AC cable's ring cable lug sleeve.

. Fasten the input plate using the 6 screws [T_30 / 53.10 In-Ibs
NOTE: When using metal screw connections, toothed discs must be placed underneath to create an enclosure earthing.

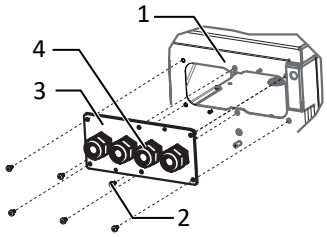

Fig. 19: Removing the AC input plate

1 Housing base – AC-side
2 Screws for mounting
3 Input plate
4 Cable fitting

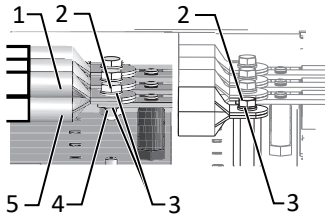

Fig. 20: Prepare AC connection

1 Ring cable lug (top)
2 Screw
3 spring washer
4 Nut
5 Ring cable lug (bottom)

7.4.2 Making the grid connection

↻ **4-pole connection, TN, TT system** connection is prepared.

1. Loosen nut and lock washer at the marked grounding point.
2. Lay the grounding cable onto the grounding point. Secure it with the nut and lock washer provided [W_17 / 88.50 In-Ibs]. [5]
3. Place the cable lug of cores L1 / L2 / L3 on the busbar in accordance with the labeling and secure it with a nut, screw and lock washer (fastening elements in scope of supply) [W_17 / 265.52 In-Ibs].
4. Check secure fit of all connected cables.
5. Tighten AC cable fittings [W_46 / 88.50 In-Ibs].

⇨ The device is connected to the power grid.

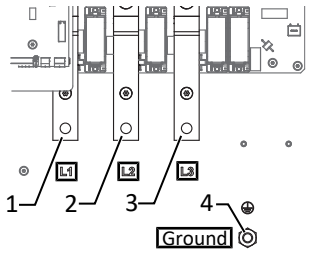

Fig. 21: 4-Pole AC grid connection

1 L1 busbar
2 L2 busbar
3 L3 busbar
4 Ground - earthing point

[4] When using aluminum cable lugs we recommend using cable lugs with galvanic tin plating or, alternatively, AL/CU cable lugs with suitable AL/CU washers. Otherwise, with the electrolytes present (e.g. Condensation water), the aluminum could be destroyed by the copper bus bars.

[5] If the connection is made in a TN-C grid, connect the PEN grounding cable to the ground earthing point.

EN-US

NOTE

Configuration of the cable cross-section

When the line resistance is high, i.e. long cables on the grid side, the voltage drop on the line increases, and the terminal voltage is higher or lower than the country-specific limit value, the device shuts down.

1. Ensure that the cable cross-sections are sufficiently large or that the cable lengths are sufficiently short.

7.5 Connecting the battery to the device

⚠ DANGER

Risk of fatal injury due to electric shock!

When connecting the batteries and installing supply lines, arcs may occur that may cause serious injury and property damage.

1. Insert internal fuse before connecting the DC voltage.
2. Repair damage to the DC line without delay.
3. Batteries must be fitted with potential equalisation in protection class I and with double-insulated DC cable in protection class II.

⚠ CAUTION

Danger caused by reverse polarity at the DC connection.

The device does not have reverse polarity protection on the DC connection. This can lead to destruction of the device.

1. Check polarity using suitable measuring equipment before connecting the DC cable.
2. Failure to observe these warnings may lead to device damage which is not covered by the manufacturer warranty.

NOTE

Required assembly tools

For installation of the DC cables, use a torque wrench as well as an open-ended wrench for counter-resistance with the following designation and dimensions:

1. Double open-end spanner, WM 16+17, metric **short** with max. length of 160 mm (GEDORE)

⚠ WARNING

IP66 (IEC 60529) not guaranteed!

Ingress of condensation, dust or vermin can lead to short-circuiting/overheating or even failure of the device.

1. Tighten **all** cable/sealing plug/housing screw connections to the **specified torques**.
2. If cable glands are not used, the sealing plugs must be retained with the specified torques.

7.5.1 With precharge unit

NOTE

Galvanic isolation depending on device variant

Device variant L: The insulation is 1-pin.
Device variant XL: The isolation is on all pins.

EN-US

L & XL Variante

↻ Time required for DC connection: 15 min

↻ Connection cable with 2 x 1 cores is provided on the unit.

1. Undo the cable fitting [W_46]
2. Remove the outer cladding of the DC cables.
3. Pass the DC cables through the cable fittings into the connection compartment.
4. Fit DC lines with an M10 ring cable lug [max. width b 1,10 In].
5. Screw the negative (-) cable end onto the DC connection according to the polarity of the battery [W17 / 265.52 In-lbs].
6. Screw the positive (+) cable end onto the DC+ fuse holder according to the polarity of the battery [W16 / 265.52 In-lbs].
7. Check secure fit of all connected cables.
8. Ensure that the polarity is correct.
9. Tighten cable fittings [W_46 / 88.50 In-lbs].

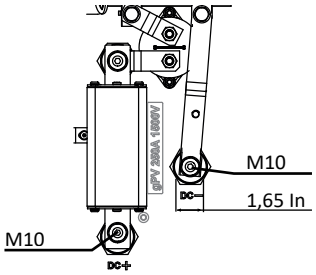

Fig. 22: DC connection L version

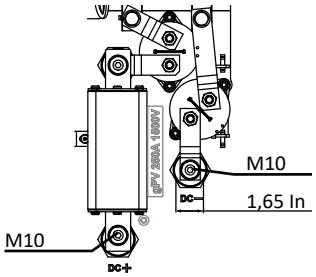

Fig. 23: DC connection XL version

7.5.2 Without precharge unit

⚠ CAUTION

Danger caused by exceeding the inrush current

The device does not have a inrush current limiter on the DC side. Exceeding the maximum permissible inrush current of 300A can lead to destruction of the device.

1. The inrush current must be limited to a max. current of 300A using external means. The DC input capacity of the device is approx. 550µF.
2. DC link may still be charged link after disconnecting the device from the battery. The limitation of the inrush current must also be ensured in this scenario.
3. Failure to observe these instructions may result in damage to the device which is not covered by the warranty.

M variant

↻ Connection cable with 2 x 1 strands already on the device.

1. Undo the cable fitting [W_46]
2. Remove the outer cladding of the DC cables.
3. Pass the DC cables through the cable fittings into the connection compartment.
4. Fit DC lines with an M10 ring cable lug [max. width b 1,65 In].
5. Screw the negative (-) cable end onto the DC connection according to the polarity of the battery [W17 / 265.52 In-lbs].
6. Screw the positive (+) cable end onto the DC+ fuse holder according to the polarity of the battery [W16 / 265.52 In-lbs].
7. Check secure fit of all connected cables.
8. Make sure that the polarity is correct, and that the inrush current is ensured at max. 300A.
9. Tighten cable fittings [W_46 / 88.50 In-lbs].

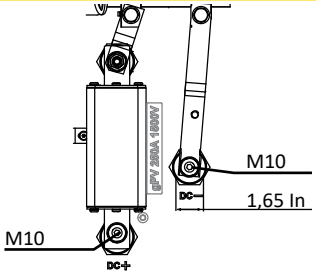

Fig. 24: DC connection M version

EN-US

7.6 Inserting the overvoltage protection

AC overvoltage protection

↻ Absence of AC/DC voltage ensured and device open [[See section 7.1 Page 22]].

↻ On initial delivery, remove intermediate plug-in frame on the AC surge protection device.

☞ Position and secure intermediate plug-in frame onto AC surge protection socket.

NOTE: Different AC surge protection modules are used. The designation on the PCB must match the module code (GTD/MOV).

1. Insert AC surge protection modules individually into the AC surge protection socket.[See installation instructions in the [See section 4.3 Page 15] package.
2. Remove SPD monitoring jumper for automatic monitoring.
3. Remove SPD monitoring jumper for automatic monitoring.

⇨ Proceed with the installation of the device.

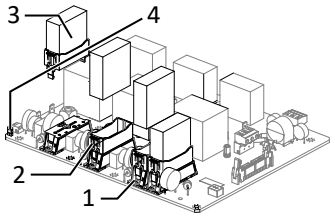

Fig. 25: Upgrading the AC surge protection

1	AC surge protection socket
2	AC intermediate plug-in frame
3	AC surge protection module (4 slots)
4	SPD monitoring jumper

Installing the Ethernet surge protection

↻ It has been ensured that there is no AC/DC voltage present.

1. Clamp Ethernet overvoltage protection module on the top hat rail from top to bottom.
2. Connect the short Ethernet cable with an Ethernet port on the communication board. [See installation instructions in the [See section 4.3 Page 15] package
3. Insert Ethernet cable through the corresponding cable fitting and insert into overvoltage protection module.

⇨ Proceed with the installation of the device.

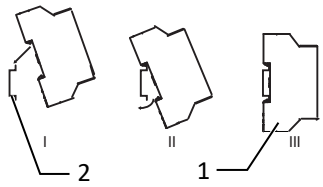

Fig. 26: Inserting the Ethernet overvoltage protection

1	Ethernet overvoltage protection module (optional)
2	Top-hat rail

7.7 Creating equipotential bonding

NOTE

Use of the housing grounding

Depending on the local installation specifications, it may be necessary to earth the device with a second ground connection. To this end, the threaded bolt on the underside of the device can be used.

↻ The device has been installed on the mount.

1. Strip the cable for equipotential bonding.
2. Furnish the stripped cable with an M8 ring cable lug.
3. Check that the connected cable is fitted securely.

⇨ The housing is included in the equipotential bonding.

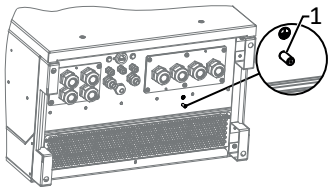

Fig. 27: Additional grounding point

1 Earthing bolt

7.8 Connecting the interfaces

7.8.1 Overview

⚠ DANGER

Risk of fatal injury due to electric shock!

Severe injuries or death may result from improper use of the interface connections and failure to observe protection class III.

1. The SELV circuits (SELV: safety extra low voltage) can only be connected to other SELV circuits with protection class III.

EN-US

⚠ CAUTION

Damage to the device from electrostatic discharge

Components inside the unit can be damaged beyond repair by static discharge.

1. Observe the ESD protective measures.
2. Earth yourself before touching a component by touching a grounded object.

All interfaces are located on the communication circuit board (HMI board) inside the housing.

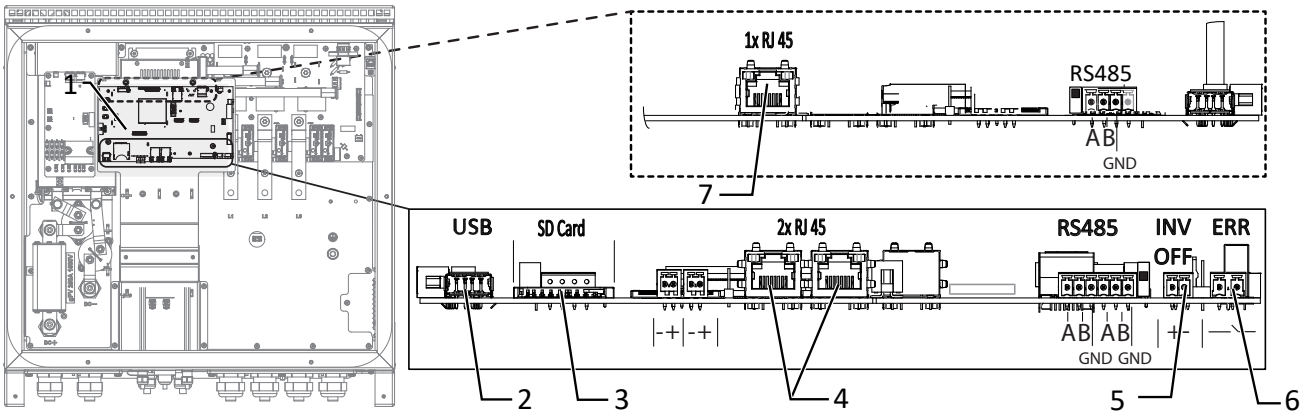

Fig. 28: Communication circuit board (HMI board)

1	Communication circuit board	5	INV OFF - connection for remote controls - 24V(+/-20%) /1A (at least 15mA)
2	USB socket	6	ERR connection for external grid protection component (fault signal relay)
3	SD- Slot	7	Etthernet – only for starting up by means of static IP([See section 8.2.2 Page 32])
4	Ethernet for network connection DHCP		

⚠ WARNING

IP66 (IEC 60529) not guaranteed!

Ingress of condensation, dust or vermin can lead to short-circuiting/overheating or even failure of the device.

1. Tighten **all** cable/sealing plug/housing screw connections to the **specified torques**.
2. If cable glands are not used, the sealing plugs must be retained with the specified torques.

7.8.2 Inserting and laying the cables

⚠ DANGER

Risk of fatal injury due to electric shock!

Touching damaged insulation on the grid and battery connection leads results in severe injury or death.

1. Check the connection leads for damage.
2. All signal cables for interfaces must be correctly encased up to the connection using the insulation tube provided before fitting the cable.

EN-US

↻ Time required for connecting the interface cables: 10 min

1. Observe the instructions on the recommended cable for the interface used.
2. Unfasten the cover on the cable fitting [🔧W_20].
3. Feed the signal cable into the connection area.

⇨ Signal cable inserted.

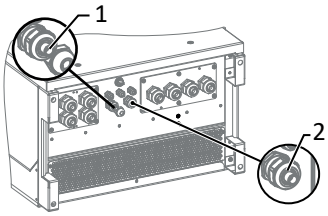

Fig. 29: Insert signal cables

1 Cable fitting for routing the Ethernet cable
2 Cable fitting for routing the signal cable

Inserting the Ethernet cable

1. Unfasten and remove the cover on the cable fitting [🔧W_29].
2. Remove the sealing insert.
3. Thread the connection cable through the cover of the cable fitting and the sealing insert.
4. Insert the sealing insert into the cable fitting.
5. Feed the connection cables into the connection area.

⇨ Ethernet cable inserted.

7.8.3 Connecting via Ethernet

NOTE

Feed-in of the communication line

The connection plug of an RJ45 cable is larger than the opening of an M25 cable fitting when it is installed. For this reason, remove the sealing insert before installation and thread the Ethernet cable outside of the cable fitting through the sealing insert.

NOTE

Note the type of network cable

Use a suitable category 7 network cable. The maximum distance between two devices is 100 m (328 ft). The Ethernet switch allows for the repeater function and supports auto-sensing. Ensure that the cable is correctly assigned. You can use both crossed and 1:1 protectively-wired Ethernet connection cables.

↻ Connecting cable inside the device.

1. Plug in an Ethernet cable at one of the two Ethernet ports on the communication circuit board.
2. Check that the connecting cable is fitted securely.

⇨ Connect additional signal cables.

Connecting the device to the network

↻ The Ethernet cable has been connected to the device.

1. Connect the Ethernet cable to the network or a computer.
2. Configure the Ethernet settings and the webserver in the Settings menu.

7.8.4 Connecting the fault signal relay

The contact is designed as an N/O contact and is labeled "ERR" or "Relay" on the circuit board.

Maximum contact load	
DC	30 V/1A

↻ Connection area cover open.

1. Loosen the cable fitting to pass the signal cable through [🔧W_20]
2. Thread the connection cables through the cable fitting.
3. Attach the connection cables to the terminals. [See section 7.8.1 Page 27]
4. Tighten cable fitting [🔧W_20 / 13,27 In-lbs].

EN-US

7.9 Sealing the connection area

↻ Grid connection is prepared.

1. Lift the housing cover onto the housing and loosely tighten the fastening screws.
2. Secure the housing cover (1) by tightening all 6 screws (2) in a diagonally opposite sequence [T_25 / 44.25 In-lbs].

⇨ The device has been mounted and installed.

⇨ Put the device into operation.

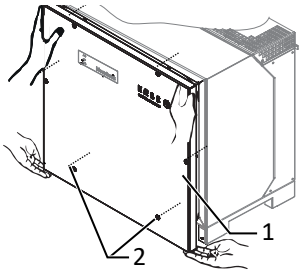

Fig. 30: Close the housing cover

EN-US

8 Start-up

8.1 Conditions



⚠ DANGER

Lethal voltages are still present in the connections and cables of the device even after the device has been switched off and disconnected!

Severe injuries or death may occur if the cables and/or terminals/busbars in the device are touched.

1. The device is only permitted to be put into operation by a specialist.
2. Unauthorized persons must not be able to access the device.

↻ The device has been mounted and electrically installed.
↻ The battery supplies a voltage above the configured start voltage.

1. Connect the grid voltage using the external circuit breakers.
2. Activate the battery and connect via the external DC isolator switch.

⇨ During initial start-up: Follow the instructions of the New Connection Wizard.

⇨ Following an interruption in operation Device waits for the prompt of the EMS/PMS



NOTE

Wi-Fi-enabled device required

A mobile terminal device with Wi-Fi interface is required in order to put the device into operation

The following functions are only available via the WEB interface:

1. Initial start-up
2. Parameterization
3. Reset to factory defaults.



NOTE

Use of a suitable web browser

We recommend using an up-to-date Firefox or Chrome browser or the default browser that is available on the mobile terminal devices to configure the device via the web interface.

8.2 Start-up options

Option 1: Locally guided commissioning via WIFI	– Installer connects to a KACO inverter via WIFI. – Installation wizard interactively guides you through the commissioning steps.
Option 2: Local LAN connections	– Installer connects to a KACO inverter via LAN. – Installation wizard interactively guides you through the commissioning steps.
Option 3: Local commissioning with pre-assembled configuration	– Installer uses USB memory stick that already contains a prepared configuration of a device. – The device imports these settings and is then ready for operation.
Option 4: Commissioning in a network without segment controller	– Commissioning in an existing network. – Installer can carry out commissioning using the installation wizard as described in option 1. The device can be addressed via its host name.
Option 5: Central commissioning via segment controller	– An existing device configuration on the Segment Controller can be uploaded to several KACO inverters.

EN-US

– Once this configuration has been activated, the devices are ready for operation.

Tab. 2: Commissioning variants for individual device or system segment

8.2.1 Start-up via WIFI

The following figure provides an example of the structure of a KACO device with wirelessly connected mobile devices.

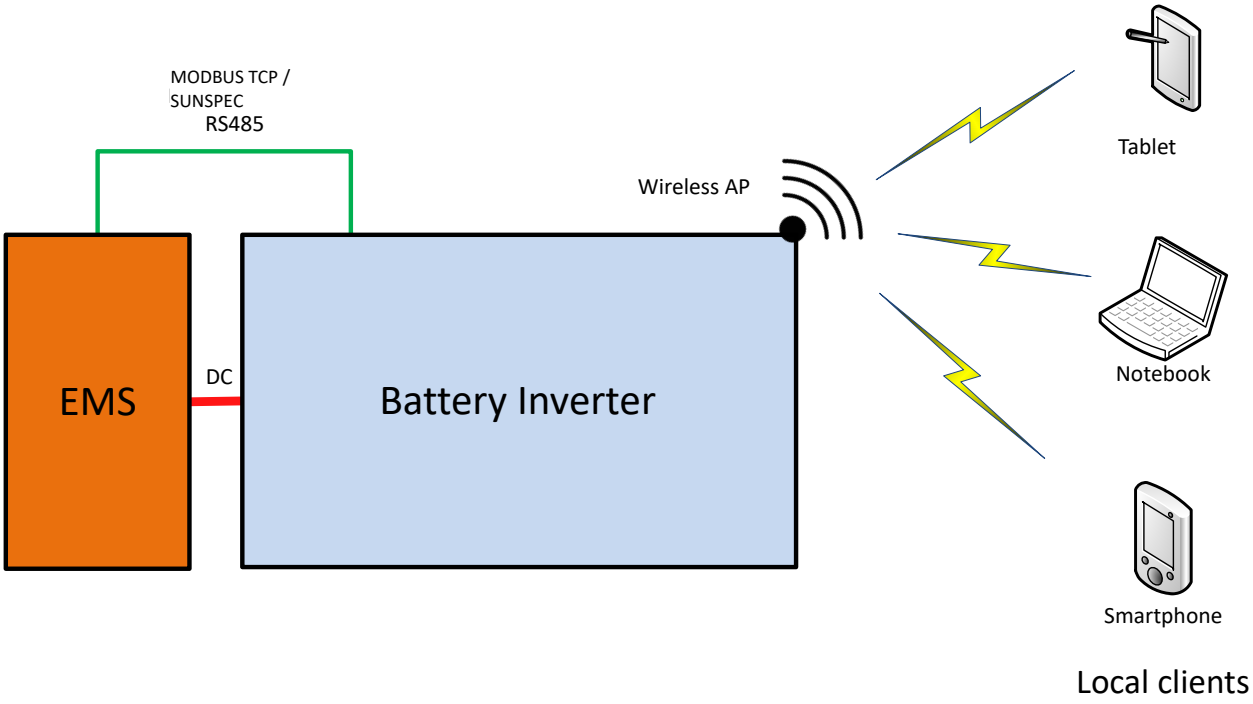

Fig. 31: Start-up via a direct WiFi connection

Application

The planned network infrastructure or AC-coupling is not yet in place or has not been completed.

A DC supply to the KACO device is sufficient for start-up.

Required components

– WiFi-compatible notebook, tablet or smartphone (Android or iOS devices can be used).

– USB WiFi stick (KACO accessory, type: WLAN adapter Digitus 150 N micro article no.: 3013222)

Establishing a connection to the KACO device via WiFi

☞ Insert the USB WIFI stick into the device and connect it to the access point created by the device using a notebook or mobile device. The WIFI SSID corresponds to the serial number of the device, which is printed on the type plate.

☞ Name of access point: <Device designation serial number> (e. g. „bg92-<serial number>“ or„bg137-<serial number>“)

1. Password: kacowifi
2. Start the browser on the end device and enter server name a) or server address b):

☞ http:// 192.168.1.1

☞ Confirm entry.

⇨ The device configuration page is displayed.

1. At the Login/register icon, log in as:
2. User name: user
3. Password: kaco-user

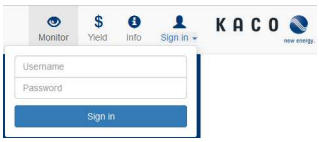

Fig. 32: Login screen

8.2.2 Commissioning via LAN connection

The following figure provides an example of the structure of a KACO device with string collector (SC) and directly connected mobile devices via Ethernet.

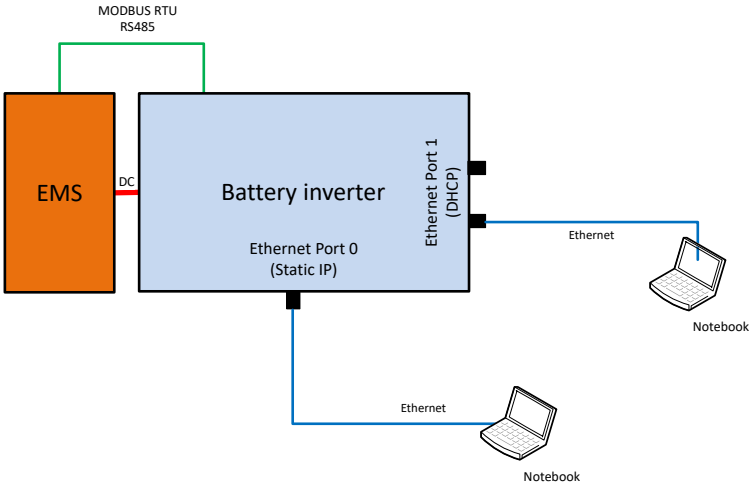

Fig. 33: Start-up via Ethernet

Application

The planned network infrastructure or AC-coupling is not yet in place or has not been completed.

A DC supply to the KACO device is sufficient for start-up.

Required components

– Notebook with Ethernet interface

– Ethernet cable (uncrossed patch cable)

Establishing a connection to the KACO device

1. The device must be opened in order to connect the Ethernet cable! For safety reasons, KACO therefore recommends establishing a connection via WiFi.
2. The device's communication circuit board has 3 Ethernet ports that can be used:

– The 2 neighboring shielded Ethernet ports are marked LAN1 and LAN2. These ports have an internal switch and, in their factory default state, they expect to receive an IP address from a DHCP server. As such, these can only be used if the connected PC makes a DHCP service available.

– The port marked CON700 that can be used to speak to the device using the static IP address 169.254.1.1. This option is preferable if you have decided to go with a wired solution.

. **NOTE: Please do not under any circumstances connect the Ethernet cable to the unshielded RJ45 slot marked J200 as this typically causes damage to the printed circuit board!**

1. Launch the browser on the terminal device and enter the IP address of the device:
2. http://<Geräte-IP-Adresse> (if ports LAN1 or LAN2 have been used)
3. http://169.254.1.1 (if the port marked CON700 has been used)

⇨ The device configuration page is displayed.

8.2.3 Start-up via a USB memory stick

Application

The installation technician has saved a pre-prepared device configuration on a USB memory stick (e.g. a configuration that he has uploaded during the guided installation of a device or one that has been given to him by a third party).

Required components

– USB memory stick with pre-prepared start-up configuration file.

Procedure

1. Connect the USB memory stick to the USB slot on the underside of the device.

⇨ The device checks the saved configuration and emits a flash code via the LEDs on the front of the device which allows conclusions to be drawn about the validity of the configuration ([See section 9.2 Page 36]).

2. Bei gültiger Konfiguration werden die Parameter übertragen.

⇨ Once the parameters have been adopted and the device has been restarted, the device is put into operation.

EN-US

8.2.4 Starting up a network

The following illustration provides an example of the structure of a KACO unit with a string collector (SC) and an external network connection.

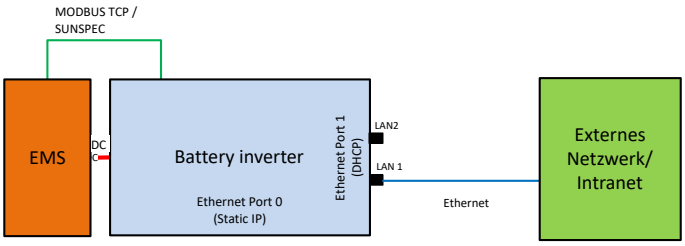

Fig. 34: Start-up via an external network

Application

If the device is to be integrated into an existing network, then the configuration shown in the figure should be used. It is immaterial whether port LAN1 or LAN2 is used.

Required components

- A notebook that is logged into the external network.
- Ethernet cable (uncrossed patch cable)

Establishing connection to the KACO device

1. The device must be opened to plug in the Ethernet cable! The device offers on the with labeled circuit board 3 Ethernet ports that can be used. For this application, only one of the 2 neighboring shielded Ethernet ports (designated LAN1 and LAN2) should be used. These ports have an internal switch and expect an IP address from a DHCP server on delivery.

. **NOTE: Please do not under any circumstances connect the Ethernet cable to the unshielded RJ45 slot marked J200 as this typically causes damage to the printed circuit board!**

2. Use a functional Ethernet socket on the external network side.
3. Additional configuration measures may be required on the IT side in the external network so that the device is assigned an IP address.
4. Then start the browser on the end device and enter the device IP address:

   ⇨ http://<Geräte-IP-Adresse>

   ⇨ The IP address can either be requested from the network administrator or determined using an IP scanner tool.

↻ http://bg137-137TL01234567 *bzw*. http://bg92-92-0TL01234567 [6]

☞ If this is unsuccessful, please use the full domain name: http://bp137-137TL01234567<DomainnameExternesNetzwerk> oder http://bg92-92-0TL01234567<DomainnameExternesNetzwerk>

[6] If the device serial number features a "." dot, then this "." dot is replaced with a "-" dash in the host name as, according to RFC229, host names must not contain any "." dots.

For local host names, only characters in the range [a-z], [A-Z] and the minus character are permitted.

EN-US

9 Configuration and operation

9.1 Initial start-up

When started for the first time, the device displays the configuration assistant. It takes you through the settings necessary for the initial start-up.

NOTE

Use of the initial configuration wizard

After configuration is completed, the configuration assistant does not appear again when the device is restarted. You can then change the country setting only in the password-protected parameter menu. The other settings can still be changed in the Settings menu.

NOTE

Ensure DC power supply during initial start-up

The DC power supply must be guaranteed during initial start-up. [7]

The sequence of the settings required for initial start-up is pre-set in the configuration assistant.

After successful authorisation and selection of the main menu entry - Configuration ,The installation wizard is called up directly (if the unit is still in the delivery state and commissioning has not yet been carried out).

The installation wizard can also be called up again at a later time to make changes to the original configuration.

The installation consists of several steps, which are listed below.

Step: Language selection

↻ The installation wizard has been started or re-started.

1. Select `Menu language` via the dropdown menu.
2. Confirm the action field.

⇨ Pressing the `Next` button will take you to the next installation step.

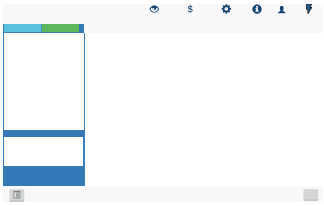

Fig. 35: Menu item: [See section 9.4.2 Page 42]

Step: Country configuration

↻ A language has been selected.

1. Select `Country` and `Grid type` from the dropdown menu.
2. Confirm the action field.

⇨ Pressing the `Next` button will take you to the next installation step.

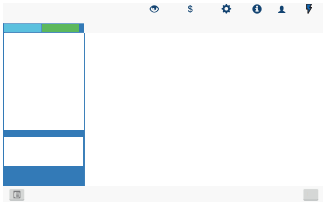

Fig. 36: Menu item: [See section 9.4.2 Page 42]

Step: Network parameters

↻ The country and grid type have been selected.

. **NOTE: By default, IP addresses are assigned via the plant DHCP server.**

. **NOTE: If static IP addresses are required, you will have to assign these.**

. **CAUTION! In this case, it is no longer possible to distribute the configuration via the Segment Controller as this would then be part of the configuration and ultimately all inverters in the same segment would be assigned the same IP address.**

1. Activate `DHCP` or enter the `IP address` at the deactivated DHCP.
2. Confirm the action field.

⇨ Pressing the `Next` button will take you to the next installation step.

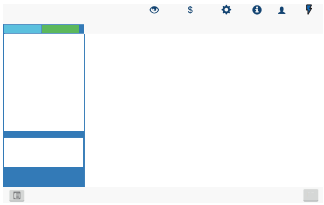

Fig. 37: Menu item: [See section 9.4.2 Page 42]

[7] It is only possible to configure the grid parameters with DC voltage. The further parameters can also be configured with a present AC voltage.

EN-US

Step: Localization

↻ The network parameters have been set up.

1. Set the `date`, `time and time zone` or arrange for synchronization with the client.
2. **NOTE: An NTP server needs to be activated for synchronization purposes** [8]
3. Select temperature unit from the dropdown menu.
4. Confirm the action field.

⇨ Pressing the `Next` button will take you to the next installation step.

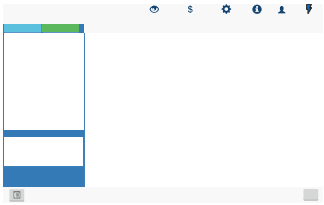

Fig. 38: Menu item: [See section 9.4.2 Page 42]

Step: ModBus

↻ Portal configuration completed.

. **NOTE: The device supports MODBUS/TCP and conventional SUNSPEC models. If there are concerns over security, write access can be deactivated.**

1. Specify the `Modbus port` and determine `Read/write access`.
2. Confirm the action field.

⇨ Pressing the `Next` button will take you to the next installation step.

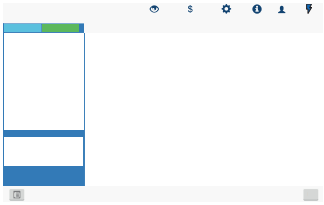

Fig. 39: Menu item: [See section 9.4.2 Page 42]

Step: Optional parameters

↻ String collector monitoring has been set up.

. **NOTE: Using the plant ID, the device followed by its firmware version can be detected automatically in the Cloud/portal and assigned to the relevant plant.**

1. Enter the device name used to reach the device in the network.

. **NOTE: The coordinates identify the device installation location.**

2. Confirm the action field.

⇨ Pressing the `Next` button will take you to the next installation step.

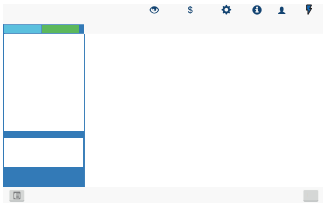

Fig. 40: Menu item: Only on the installation wizard!

Step: Finalisation

↻ Optional parameters have been set.

1. Generate installation report (includes listing of all relevant parameters for acceptance purposes)
2. Specify a name for the device installation report.
3. Confirm the action field.

NOTE: All settings can also be transferred to another unit of the same series (provided that no individual parameters are required, e.g. static IP address).

1. Optional: Export current unit settings to the client.
2. Device configuration completed successfully. Please click "Finalise" to put the device into operation.

⇨ The initial installation is now complete. Specify access for device(s).

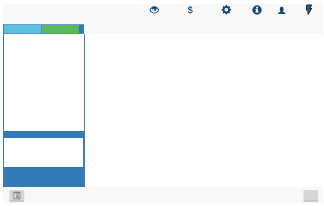

Fig. 41: Menu item: Only on the installation wizard!

9.2 Signal elements

The 3 LEDs on the device show the different operating states. The LEDs can display the following states:

 LED illuminated

 LED flashing

 LED not illuminated

Operating status	LED status	Description
		
Start		The green "`Operation`" LED is on when the AC voltage is present, independent of the DC voltage.

[8] It is preferable to install this on a plant component. It is also possible to select an NTP server localized on the internet provided the device has direct access to the internet.

EN-US

Operating status	LED status	Description
		If the LED is flashing, internal communication between the components is being established. When the LED stops flashing, the device is ready to feed in. If the LED continues to flash for a long time, there is an internal communication error.
Feed-in start		The green "Operating" LED is illuminated. The green "Grid operation" LED is lit after the country-specific waiting period*. Ready for grid operation. The charging/discharging current is displayed via the web interface. You can hear the circuit-breaker / interface switch switch on.
Feed-in mode with reduced power		The green “Operating” LED is lit. The green LED "Grid operation" is flashing because one of the modes: internal power reduction, external power reduction, external reactive power request or standalone mode is active. Ready for grid operation. The charging/discharging current is displayed via the web interface. You can hear the circuit-breaker / interface switch switch on.
No grid operation		The green "Operating" LED is illuminated.
Fault		No LEDs are illuminated. Fault in the device or AC/DC source
Fault		The red "Fault" LED is illuminated. Fault in the AC/DC source Conditional special cases: – There is no DC voltage present (e.g. DC isolator switch open) – DC voltage too low (< starting voltage) – DC voltage is present (> starting voltage), but communications connection between the front end (operating unit) and back end (control unit) is faulty, or interrupted.

The 3 LEDs also signal the **firmware update process** when a USB stick is inserted. The LEDs can assume other states for this purpose:

 LED flashing quickly

 LED flashing slowly

 LED flashing alternating

Operating status	LED status	Description
		
Procedure in progress		The green “Operating” LED is illuminated when the device is ready for use. **Note:** When updating via the web server and a USB stick is inserted in parallel, the unit remains inactive until the USB stick is removed or then performs a reset and restarts.
Procedure has commenced (initialization)		The green “Operating” LED and the green “Feed-in” LED are flashing **quickly yet alternately**. **Note:** The procedure will last up to 5 mins for firmware updates or up to 30 secs for parameter updates.

EN-US

Operating status	LED status	Description
Process is initiated (update)		The green “Operating” LED and the green “Feed-in” LED are flashing **quickly**.
Procedure completed successfully.		The green “Operating” LED and the green “Feed-in” LED are flashing **slowly and in tandem**. **Note:** Check the new SW version via the web interface .
Fault		The red "Fault" LED is **flashing slowly**. **Note:** The procedure has not been completed successfully or a time limit has elapsed. **Important:** If the USB stick is removed during the initialization phase, a device fault is triggered. Inserting the USB stick initiates a device restart.
No fault		No fault present.

9.3 User interface

NOTE

Tolerance of displayed measured values

The values for the condition of the battery connected are transmitted from the EMS directly. We cannot provide any guarantee that these values are correct.

EN-US



Fig. 42: Monitoring interface

Area	Description
Basic layout – 1st tab	Displays the current reactive power factor Displays the current output
Basic layout – 2nd tab	Displays AC and DC voltages
Basic layout – 3rd tab	Current measurement values with export function

Tab. 3: Description of the areas

EN-US

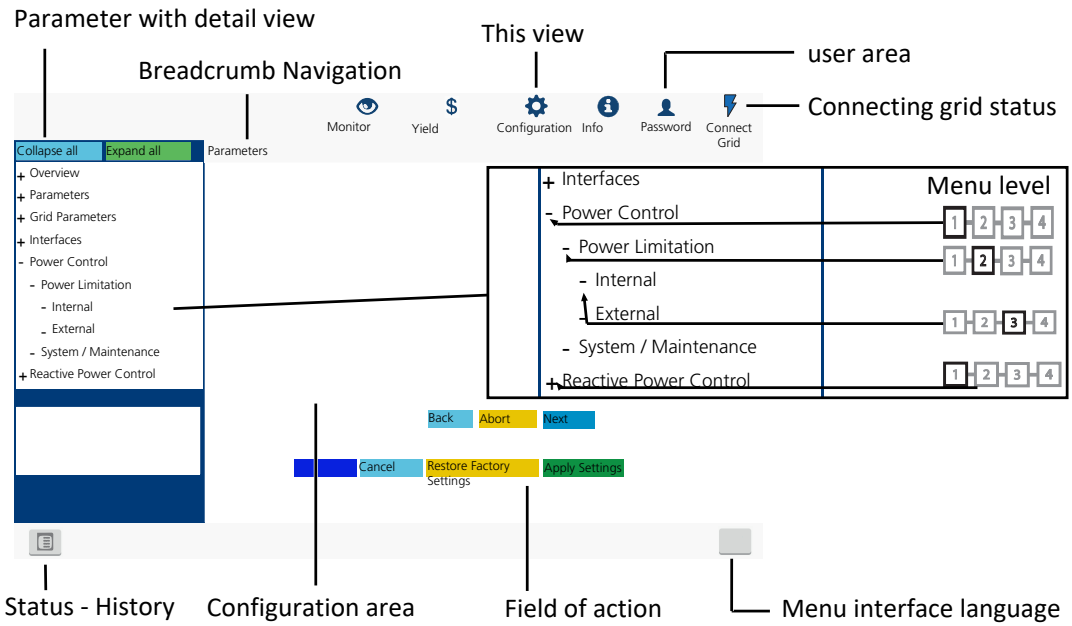

Fig. 43: Parametrization interface

Area	Description
Menu bar Tool bar	Menus and commands for operating the interface.
Area of use	Displays parameter values, graphs or input options relative to the view, function and parameter selected.
Navigation area	Displays the user level and error messages. Enables selection of connected interfaces. Enables selection of devices connected at the interface. Enables selection of functions in relation to the parameter selected.

Tab. 4: Description of the areas

EN-US

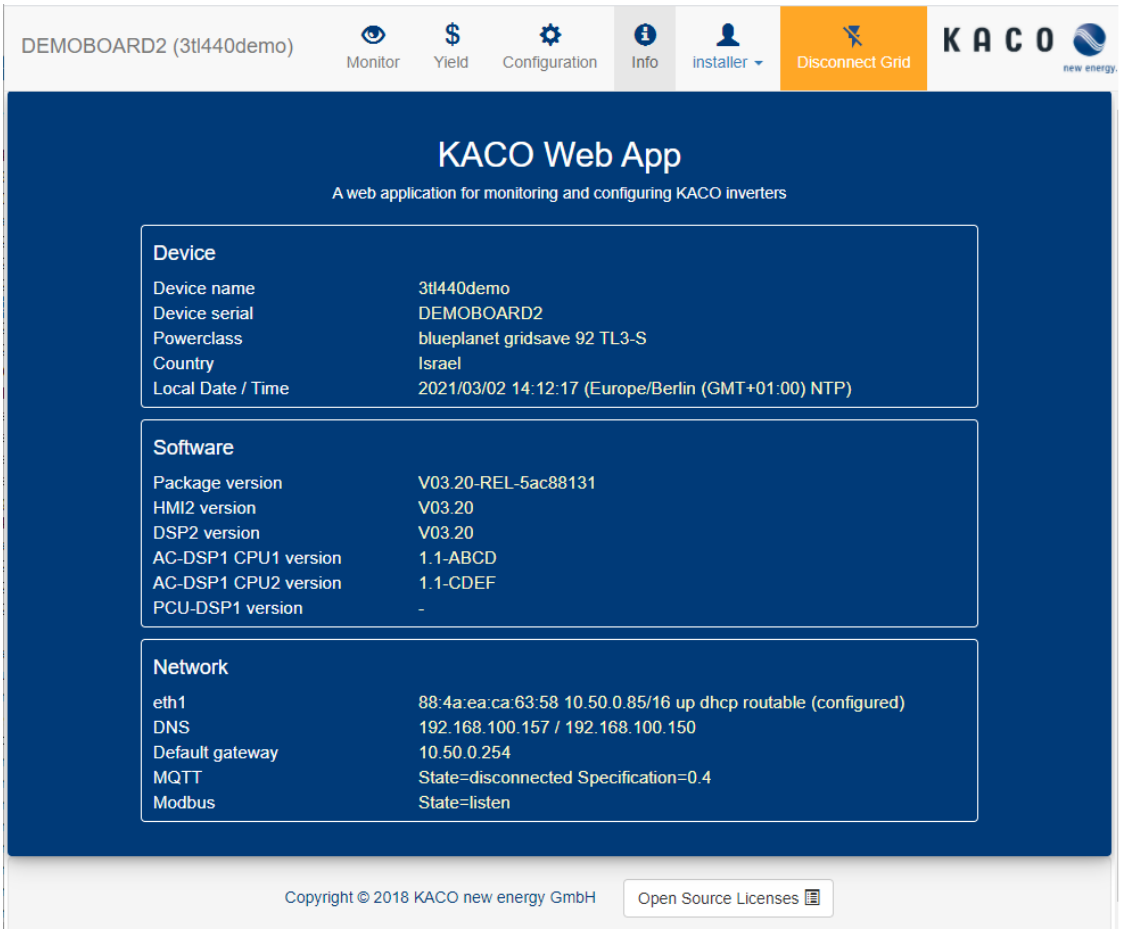

Fig. 44: Device and hardware information interface

Area	Description
Device	Displays the serial number, device name, grid type, local installation location and time
Software	Displays the firmware package installed
Network	Displays the current grid parameters

Tab. 5: Description of the areas

9.4 Menu structure

NOTE

Use of a suitable web browser

We recommend using an up-to-date Firefox or Chrome browser or the default browser that is available on the mobile terminal devices to configure the device via the web interface.

9.4.1 Yield via web user interface

Country-spec. Settings	Level	Display/ Setting	Action in this menu/meaning
		Daily view	Displays the recorded operating data graphically. ☞ Select a day. ⇨ The web interface shows the selected data.
		Weekly view	**NOTE: Displays the recorded operating data graphically.** ☞ Select a week. ⇨ The web interface shows the selected data.

EN-US

Country-spec. Settings	Level	Display/ Setting	Action in this menu/meaning
	1 2 3 4	Month display	Displays the recorded operating data graphically. ☞ Select a month. ⇨ The web interface shows the selected data.
	1 2 3 4	Yearly view	Displays the recorded operating data graphically. ☞ Select a year. ⇨ The web interface shows the selected data.
	1 2 3 4	Export / print Print PNG | PDF | JPEG | SVG | GIF	**NOTE: Opportunity to print out or save the chart.** 1. Select an output format. 2. Specify the storage location.

9.4.2 Configuration via web user interface

Country-spec. Settings	Level	Display/ Setting	Action in this menu/meaning
	1 2 3 4	Overview	Input screens for basic settings
	1 2 3 4	Localization Status	1. Select the desired language for the user interface. 2. Select the current date and enter the time or press the button Sync with client device now. 3. Select a time zone. 4. Specify the temperature unit. 5. Enter the device name. 6. Enter the degree of longitude and latitude of the installation location. 7. Enter the plant ID. 8. Confirm the action field.
	1 2 3 4	ACSettings	Input screens for grid parameters.
	1 2 3 4	Country & Grid type	**NOTE: This option influences the country-specific operating settings of the device. Please consult KACO service for further information.** 1. Select country and grid type. 2. Observe the note for [See section 9.4.2 Page 64]
		Nominal grid voltage & Nominal grid frequency Status	☞ Specify optional nominal grid voltage. **NOTE: The device switches off if the grid frequency deviates from the nominal grid voltage by more than 9.5 Hz.** 1. Select optional nominal grid frequency. 2. Confirm the action field.
	1 2 3 4	Trip Settings	**NOTE: Activate shutdown according to generic parameters, frequency or voltage.**
	1 2 3 4	Generic parameters	**NOTE: Opportunity to activate standard protection shutdown**
	1 2 3 4	Trip with intentional delay Check to enable	1. If necessary, activate delayed trip-off. 2. Confirm the action field.

EN-US

Country-spec. Settings	Level	Display/ Setting	Action in this menu/meaning
		Frequency	**NOTE: Opportunity to monitor frequency shutdown**
		Trip underfrequency monitoring Status	☞ Activate, if necessary.
		Number of trip underfrequency levels 1- 5 / 2 / 1	☞ Specify the number of support levels.
		Trip underfrequency level 1 45 – 65 [Hz] / 47.5 [Hz] / 0.01 Trip underfrequency time level 1 0 – 100000 [ms] / 100 [ms] / 1	**NOTE: If the grid frequency is within the deactivation range for the duration of the deactivation time, then the function is deactivated.** ☞ Specify the range and trip-off time.
		Trip underfrequency level 2 - 5 42.5 – 65 [Hz] / 47.5 [Hz] / 0.01 Trip underfrequency time level 2 – 5 0 – 100000 [ms] / 100 [ms] / 1	
		Trip overfrequency monitoring Status	☞ Activate, if necessary.
		Number of trip overfrequency levels 1- 5/ 2 / 1	☞ Specify the number of support levels.
		Trip overfrequency level 1 45.0 – 66 [Hz] / 51.5 [Hz] / 0.01 Trip overfrequency time level 1 0 – 1000000 [ms] / 100 [ms] / 1	**NOTE: If the grid frequency is within the deactivation range for the duration of the deactivation time, then the function is deactivated.** 1. Specify the range and trip-off time. 2. Confirm the action field.
		Trip overfrequency level 2 – 5 45.0 – 66 [Hz] / 51.5 [Hz] / 0.01 Trip overfrequency time level 2 – 5 0 – 1000000 [ms] / 100 [ms] / 1	

EN-US

Country-spec. Settings	Level	Display/ Setting	Action in this menu/meaning
	1 2 3 4	Voltage	**NOTE: Opportunity to monitor the voltage shutdown**
	1 2 3 4	Trip undervoltage monitoring Status	☞ Activate if necessary.
	1 2 3 4	Number of trip undervoltage levels 1- 5 / 2 / 1	☞ Specify the number of support levels.
	1 2 3 4	Trip undervoltage level 1 10 – 100 [% U_{nom}] / 80 [% U_{nom}] / 0.1 Trip undervoltage time level 1 0 – 180000 [ms] / 1000 [ms] / 1	☞ Define range and trip-off time.
	1 2 3 4	Trip undervoltage level 2 – 5 10 – 100 [% U_{nom}] / 45 [% U_{nom}] / 0.1 Trip undervoltage time level 2 – 5 0 – 180000 [ms] / 300 [ms] / 1	
	1 2 3 4	Trip overvoltage monitoring Status	☞ Activate if necessary.
	1 2 3 4	Number of trip overvoltage levels 1- 5 / 2 / 1	☞ Specify the number of support levels.
	1 2 3 4	Trip overvoltage level 1 100 – 125 [% U_{nom}] / 110.0 [% U_{nom}] / 0.1 Trip overvoltage time level 1 0 – 180000 [ms] / 20000 [ms] / 1	1. Define range and trip-off time. 2. Confirm the action field.
	1 2 3 4	Trip overvoltage level 2 – 5 100 – 125 [% U_{nom}] 114.8 [% U_{nom}] / 0.1 Trip overvoltage time level 2 to 5 0 – 180000 [ms] / 100 [ms] / 1	

EN-US

Country-spec. Settings	Level	Display/ Setting		Action in this menu/meaning
	1 2 3 4	10 min. mean value		**NOTE: Monitoring of a variation in the average voltage value of 10 minutes.**
				☞ Activate if necessary.
	1 2 3 4	Monitoring 10 minute average grid voltage Status 10 minutes average 100 – 125 [% Unom] / 125.0 0.1 %		☞ Set the voltage in % via averaging.
	1 2 3 4	Island Detection		**NOTE: Grid operators require shutdown of the device with standalone grid detection. More detailed information at:** [See section 10.5 Page 85]
	1 2 3 4	Mode Off / ROCOF / ROCOF enhanced / Frequency shift Password Protection		**NOTE: This function is active in the factory setting and may only be deactivated in standalone islanding operation (without grid).** 1. Select mode and note menu items. 2. Activate password protection if necessary. 3. Confirm the action field.
	1 2 3 4	ROCOF Password Protection		☞ Activate passive grid influence by application of a frequency.
		ROCOF enhanced Password Protection		☞ Activate active grid influence by application of a frequency.
	1 2 3 4	ROCOF threshold stage 1 value 0.1 – 6.0 [Hz / s] / 0.1 ROCOF threshold stage 2 value 0.1 – 6.0 [Hz / s] / 0.1		☞ Define threshold for ROCOF.
		ROCOF threshold stage 1 time 100 – 5,000 [ms] / 0.1 ROCOF threshold stage 2 time 100 – 5,000 [ms] / 0.1		☞ Define time value for ROCOF.
	1 2 3 4	ROCOF enhanced		**NOTE: Active detection after exceeding the first threshold.**

EN-US

Country-spec. Settings	Level	Display/ Setting		Action in this menu/meaning
	1 2 3 4	ROCOF threshold stage 1 value ⚙ 0.1 – 6.0 [Hz / s] / ◠ 0.1 ROCOF threshold stage 2 value ⚙ 0.1 – 6.0 [Hz / s] / ◠ 0.1		☞ Define threshold for ROCOF.
		ROCOF threshold stage 1 time ⚙ 100 – 5,000 [ms] / ◠ 0.1 ROCOF threshold stage 2 time ⚙ 100 – 5,000 [ms] / ◠ 0.1		☞ Define time value for ROCOF.
	1 2 3 4	ROCOF proportionality factor ⚙ -5000 – 5000 [‰ / Hz / s] / ◦ -20 / ◠ 1 ☑ Status		1. Define the proportionality factor. 2. Confirm the action field.
	1 2 3 4	Frequency shift ☑ Off | On		☞ Activate frequency shift.
	1 2 3 4	Pulse period repetition time ⚙ 40 – 6000 [ms] / ◦ 1000 [ms] / ◠ 1 [ms]		☞ Define period for detection.
	1 2 3 4	Ramp Rate Limitation		**NOTE: Opportunity to limit power in the case of an increasing and decreasing nominal power/maximum power.**
		Operation mode ☑ ON | OFF		☞ Select operating mode.
		Increasing gradient & Decreasing gradient ⚙ 1 – 65534 [%/min] / ◦ 65534 / ◠ 1		☞ Set gradient. This percentage relates to the nominal power/maximum power. ☞ Confirm the action field.

EN-US

Country-spec. Settings	Level	Display/ Setting	Action in this menu/meaning
	2	Connection Conditions	**NOTE: Precise connection conditions should be specified relative to the grid conditions.**
	2 3 4	Min. conn. voltage after grid mon. 10 – 110 [% Unom] / 94.8 / 0.1 & Max. conn. voltage after grid mon. 90 – 125 [% Unom] / 110.0 / 0.1	☞ Specify switch-on voltage range after grid error.
	3 4	Min. conn. frequency after grid mon. 45 – 65 [Hz] / 47.5 / 0.01 & Max. conn. frequency after grid mon. 45 – 65 [Hz] / 50.05 / 0.01	☞ Specify switch-on frequency range after grid error.
	3 4	Min. conn. voltage after grid failure 10 – 110 [% Unom] / 94.8 / 0.1 & Max conn. voltage after grid failure 90 – 125 [% Unom] / 110.0 / 0.1	☞ Specify switch-on voltage range after grid error.
	3 4	Min. conn. frequency after grid failure 45 – 65 [Hz] / 47.50 / 0.01 & Max. conn. frequency after grid failure 45 – 65 [Hz] / 50.05 / 0.01	☞ Specify switch-on frequency range after grid error.
	3 4	Monitoring time PV voltage 1000 – 1800000 [ms] / 60000 / 1000 **&** Monitoring time grid voltage 1000 – 1800000 [ms] / 60000 / 1000 **&**	☞ Specify the time for monitoring the grid voltage and PV voltage.
	3 4	Waiting time after grid failure 1000 – 1800000 [ms] / 60000 / 1000	1. Set waiting time after grid failure. 2. Activate optional password protection. 3. Confirm the action field.

EN-US

Country-spec. Settings	Level	Display/ Setting	Action in this menu/meaning
	2	Active Power Control	**NOTE: The output power of the device can be set permanently to a lower value than the maximum output power via the active power regulation.**
	3	Internal	**NOTE: Option for internal power limitation as required by the grid operator to limit the maximum power rating of the system at the grid connection point. More detailed information at** [See section 10.4.1 Page 83]
	3	Power Limitation Check to enable	☞ Specify the activation status.
	3	Maximum apparent power Slim 10000 -125000 / [See section 4 Page 14][VA]/ 100 [VA]	**NOTE: The max. apparent power limits the internal power of the device.** ☞ Enter the value or set the value using the slider.
	3	Maximum active power Plim 1.0 - 100.0 [% Slim]/ 100 [% Slim] / 0.1	**NOTE: The max. active power limits the internal power of the device** ☞ Enter the value or set the value using the slider.
	3	External	**NOTE: The parameters set here are used by default if they are not sent via the communication interface, or if communication fails for the set fallback time.**
	3	Power Limitation Check to enable	☞ Specify the activation status.
	3	AC fallback active power 0 – 100 [%Plim] / 100 [%Plim] / 1	☞ Set fallback power. Specifies the standard power in the event of a communication failure. If no active power command is received within the configured fallback time, the device sets the power to the configured fallback power.
	3	Fallback time 0 – 43200 [s] / 300 [s] / 1	☞ Set the fallback time for the external power specification. **WARNING! After the set fallback time, external (RS485 or Modbus) specifications for cos-phi, Q and P are reset to the relevant set fallback value (cos-phi constant, Q-constant or fallback power).** **NOTE: If the fallback time is set to 0s, external specifications for cos-phi, Q and P are not reset (continued operation using the most recently received target value).**
	3	Output gradient limitation increase & Output gradient limitation decrease 1 – 65534 [% Slim / min] / 65534 [% Slim / min] / 1	1. Set the maximum change in active power when increasing power. 2. Set the maximum change in active power during power control.
	3	Settling time 200 – 60000 [ms] / 1000 [ms] / 10 Status	1. Specify the settling time. 2. Confirm the action field.

EN-US

Country-spec. Settings	Level	Display/ Setting	Action in this menu/meaning
	1 2 3 4	P(f)	**NOTE: Activate frequency-dependent power reduction in the P(f) menu.**
Not for IL, IT	1 3 3 4	Operation mode ☑ Off | Mode 1 | Mode 2 | Mode 3	☞ Specify the operation mode. **NOTE: Mode 1 = Hysteresis active - Limit; Mode 2 = Hysteresis inactive - Limit; Mode 3 = Hysteresis inactive - Set**
	1 3 3 4	Power reference at underfrequency ☑ Instantaneous power | Nominal power Power reference at overfrequency ☑ Instantaneous power | Nominal power	1. Specify control method with underfrequency. 2. Specify control method with overfrequency.
	1 3 3 4	Dynamic gradient mode ☑ ON | OFF	☞ Activate dynamic gradient. **NOTE: Gradient "Feed-in/charging with over/under frequency" is not displayed.**
	1 3 3 4	Minimum frequency dynamic gradient ⚙ 40 – 50 [Hz] / 51.5 Hz / Maximum frequency dynamic gradient ⚙ 50 – 60 [Hz] / 51.5 Hz /	☞ Specify dynamic gradient frequency in Hz.
	1 3 3 4	Gradient at overfrequency (feed-in) ⚙ 0 – 200 (%/Hz) 40 (%/Hz) Gradient at underfrequency (feed-in) ⚙ 0 – 200 (%/Hz) 40 (%/Hz)	1. Specify gradient for feed-in with overfrequency. 2. Specify gradient for feed-in with underfrequency.
	1 2 3 4	Gradient at overfrequency (charge) ⚙ 0 – 200 (%/Hz) ; 40 (%/Hz) Gradient at underfrequency (charge) ⚙ 0 – 200 (%/Hz) ; 40 (%/Hz)	1. Specify gradient for charging with overfrequency. 2. Specify gradient for charging with underfrequency.

EN-US

Country-spec. Settings	Level	Display/ Setting		Action in this menu/meaning
	1 2 3 4	Activation threshold at underfrequency ⚙ 40 – 50 [Hz] / 51.5 Hz / Activation threshold at overfrequency ⚙ 50 – 60 [Hz] 51.5 Hz /		1. Set the frequency thresholds for activating the power limitation with undervoltage. 2. Set frequency thresholds for activating the power limitation with overvoltage.
	2 3 4	Gradient on falling frequency ⚙ 0 – 200 [% Pref/ Hz] / 40 [Hz[% Pref] / 1		☞ Specify gradient in the case of a decreasing frequency as a $‰_0$ (per thousand) / minute (if mode "1" or mode "2" is active).
Not for IL, IT	1 2 3 4	P(f) Deaktivierungszeit ⚙ 0 – 6000000 [ms] / 0 [ms] / 1000 [ms]		☞ Specify time for power reduction (if mode 1 is active).
	1 2 3 4	P(f) deactivation gradient ⚙ 0 – 65534 [% Smax / min] / 10 / 1		☞ Set deactivation gradient.
	1 2 3 4	P(f) intentional delay ⚙ 0 – 5,000 [ms] / 0 [ms] / 1		☞ Set delay of the power limitation.
	1 2 3 4	Deactivation range lower limit ⚙ 45 – 61.5 [Hz] / 0.01 & Deactivation range upper limit ⚙ 45 – 70 [Hz] / 0.01		☞ Set the lower and upper deactivation range in Hz. **NOTE: Only evaluated in mode 1.** The function is disabled if the frequency returns to the range between the minimum and maximum deactivation threshold and remains within this range for the duration of the deactivation time.
	1 2 3 4	Activation delay ⚙ 0 – 5,000 [ms] / 0 [ms] / 1		☞ Set the control delay.
	1 2 3 4	Output gradient limitation increase & Output gradient limitation decrease ⚙ 1 – 65534 [% Slim / min] / 65534 [% Slim / min] / 1		☞ Specify increasing and decreasing output gradients.
	1 2 3 4	P(f) settling time ⚙ 200 – 2000 [ms] / 200 [ms] / 1 [ms] Status		1. Set the P(f) settling time mode. 2. Confirm the action field.

EN-US

Country-spec. Settings	Level	Display/ Setting	Action in this menu/meaning
	1 2 3 4	Deact. lim. time after fault 0 – 1,000 [s] / 0 [ms] / 1,000 [s]	☞ After the end of the fault, the change in active power is limited to the set gradient for the specified time. **NOTE: Only evaluated in mode 2&3.**
	1 2 3 4	P(U)	**NOTE: Activate voltage-dependent power reduction in the P(U) menu.**
	1 2 3 4	Operation mode Off | On	☞ Activate the control process. **Off**: Deactivates dynamic grid support using dynamic reactive current. Dynamic grid support remains active on account of immunity to interference.
	1 2 3 4	Reference power Actual power | Nominal power	☞ Select the power-dependent control method.
	1 2 3 4	Evaluated voltage Maximum phase voltage | Positive phase sequence voltage	☞ Select the voltage to be rated. Specifies which voltage is evaluated in a three-phase system.
	1 2 3 4	Hysteresis mode Off | On	**NOTE: Hysteresis mode affects the shutdown response of P(U).** ☞ Activate the mode.
	1 2 3 4	Deactivation gradient 0 – 65,534 [% / min] / 100 [% / min] / 1	☞ Set gradients for the voltage limitation.
	1 2 3 4	Deactivation time 0 – 60000000 [ms] / 0 [ms] / 1000 [ms]	☞ Specify the time for voltage reduction.
	1 2 3 4	Output gradient limitation increase & Output gradient limitation decrease 1 – 65534 [% Slim / min] / 65534 [% Slim / min] / 1	☞ Specify increasing and decreasing output gradients.
	1 2 3 4	Settling time 500 – 120000 [ms] / 2000 [ms] / 10 [ms]	☞ Specify the settling time.
	1 2 3 4	Active curve 1 – 5	☞ Select the active curve. **NOTE: Up to 5 characteristic curves can be configured independently and one of them can be activated for regulation each time.**

EN-US

Country-spec. Settings	Level	Display/ Setting	Action in this menu/meaning
	1 2 3 4	Number of nodes ⚙ 2 – 5	☞ Specify the number of nodes.
		Power ⚙ 0.0 – 100.0 [% Pref] / ◦ 100 [% Pref] / 🖴 1	☞ Specify power for 1st, 5th ... Node as a percentage of the maximum power.
		Voltage ⚙ 80.0 – 125.0 [%Unom] / ◦ 112 / 🖴 0.1 ☑ Status	1. Specify voltage for 1st, 5th ... node as a percentage of the maximum voltage. 2. Confirm the action field.
	1 2 3 4	Power Rampup	**NOTE: Power ramp-up is used to ramp up the power gradually. More detailed information at** [See section 10.4.2 Page 85]
	1 2 3 4	Power rampup gradient ⚙ 1 – 3000 [% / min] / ◦ 10 [% / min] / 🖴 1	☞ Set increase.
	1 2 3 4	Rampup on every connect Rampup on first connect Rampup after grid failure ☑ Check to enable	1. Activate the option. 2. Confirm the action field.
	1 2 3 4	Reactive Power Control	**NOTE: Activate the reactive power process in the mode menu. More detailed information at** [See section 10.1 Page 67]
	1 2 3 4	Mode ☑ Specification cos-phi | Specification Q | Cos-phi(P/Plim) | Q(U) | Q(P)	1. Select a control process. 2. Confirm the action field.
	1 2 3 4	Cos-phi constant	**NOTE: Define the cos ϕconstant.**
	1 2 3 4	cos-phi const. ⚙ 0.3 – 1 / ◦ 1 / 🖴 0.001	☞ Determine the specified power factor.
	1 2 3 4	Power gradient increase & Power gradient decrease ⚙ 1 – 65534 [% Slim / min] / ◦ 65534 [% Slim / min] / 🖴 1	1. Maximum change in the reactive power %S_{lim}/min in the event of a change to over-excited mode. 2. Maximum change in the reactive power %S_{lim}/min in the event of a change to under-excited mode.
	1 2 3 4	Settling time ⚙ 1000 – 120000 [ms] / ◦ 5000 [ms] / 🖴 10	1. Set the settling time in the event of an abrupt change in the reactive power target value (e.g. caused by a voltage jump). 2. Confirm the action field.

EN-US

Country-spec. Settings	Level	Display/ Setting	Action in this menu/meaning
		Q constant	**NOTE: Define Q setpoint.**
		Priority mode Q-Priority | P-Priority	☞ Set priority.
		Q constant 0 – 100 [% Slim] / 0 [% Slim] / 0.1	☞ Set the reactive power Q to a fixed value.
		Under-excited | over-excited	☞ Select the type of phase shift. **NOTE: Under-excited relates to inductive load, over-excited relates to capacitive load.**
		Output gradient limitation increase & Output gradient limitation decrease 1 – 65534 [% Slim / min] / 65534 [% Slim / min] / 1	1. Maximum change in the reactive power in the event of a change to overexcited mode. 2. Maximum change in the reactive power in the event of a change to underexcited mode.
		Settling time 1000 – 120000 [ms] / 5000 [ms] / 10	1. Set the settling time in the event of an abrupt change in the reactive power target value (e.g. caused by a voltage jump). 2. Confirm the action field.
		Cos-phi(P)	**NOTE: Define the cos ϕ (P).**
		Lock-In voltage 10 – 126.6 [% Unom] / 80 [% Unom] / 0.1	☞ Set the voltage above which control is activated.
		Lock-Out voltage 10 – 126.6 [% Unom] / 80 [% Unom] / 0.1	☞ Set the voltage below which control is deactivated.
		Power gradient increase & Power gradient decrease 1 – 65534 [% Slim / min] / 65534 [% Slim / min] / 1	1. Maximum change in the reactive power %S_{lim}/min in the event of a change to over-excited mode. 2. Maximum change in the reactive power %S_{lim}/min in the event of a change to under-excited mode.
		Settling time 1000 – 12000 [ms] / 5000 [ms] / 10	☞ Set the settling time in the event of an abrupt change in the reactive power target value.
		Number of nodes 2 – 10	**NOTE: The maximum number of configurable nodes depends on the selected grid type.** ☞ Specify the number of nodes.

EN-US

Country-spec. Settings	Level	Display/ Setting	Action in this menu/meaning
		Node 1- Node 10 Power Curve 1 ⚙ 0-100 % [% Slim] / ∘ 0, 50, 100 % [% Slim] / ◠ 1	☞ Power factor for 1st , 10th ... node as a percentage of the maximum power. **NOTE: For the 1st node, the power must be 0%; for the last node, the power must be 100%. The power values of the nodes must increase continuously.**
		Cos-phi Curve 1 ⚙ 0.3 – 1 [ind/cap] / ∘ 1 / ◠ 0.001	☞ Specify the cos ϕ of the node.
		☑ Over-excited | under-excited	☞ If a reactive power not equal to 1 is selected: Select the type of phase shift. **NOTE: Over-excited relates to a capacitive load, under-excited relates to an inductive load.**
		☑ Status	☞ Confirm the action field.
		Q(P)	**NOTE: Define Q(P).**
		Power gradient increase& Power gradient decrease ⚙ 0 - 65535 [% Slim]/ ∘ 65535 [%Slim]/ ◠ 1	☞ Specify the increasing and decreasing power gradient.
		Settling time ⚙ 200 – 60000 [ms] / ∘ 6000 [ms] / ◠ 1	☞ Set the settling time in the event of an abrupt change in the rated power target value.
		Number of nodes ⚙ 2 – 10	**NOTE: The maximum number of configurable nodes depends on the selected grid type.** ☞ Specify the number of nodes.
		Q(P) Active curve ⚙ 1 – 10	☞ Select the active curve. **NOTE: Up to 10 characteristic curves can be configured independently and one of them can be activated for regulation each time.**
		Node 1- Node 10 Power Curve 1 ⚙ 0-100 % [% Slim] / ∘ 0, 50, 100 % [% Slim] / ◠ 1	☞ Power factor for 1st , 10th ... node as a percentage of the maximum power. **NOTE: For the 1st node, the power must be 0%; for the last node, the power must be 100%. The power values of the nodes must increase continuously.**
		Cos-phi Curve 1 ⚙ 0.3 – 1 [ind/cap] / ∘ 1 / ◠ 0.001	☞ Specify the cos ϕ of the node.
		☑ Over-excited | under-excited	☞ If a reactive power not equal to 1 is selected: Select the type of phase shift. **NOTE: Over-excited relates to a capacitive load, under-excited relates to an inductive load.**
		☑ Status	☞ Confirm the action field.
		Q(U)	**NOTE: Define Q(U).**
		Lock-In power ⚙ 0 - 100 [% Slim]/ ∘ 20 [%Slim]/ ◠ 1	☞ Set the active power as % of rated power above which control is activated.

EN-US

Country-spec. Settings	Level	Display/ Setting		Action in this menu/meaning
	1 2 3 4	Lock-Out power ⚙ 0-100 [% Slim] / ◦ 5 [%Slim]/ ◠ 1		☞ Set the active power as % of rated power below which control is deactivated.
	1 2 3 4	Lock-In time ⚙ 0 – 60000 [ms] / ◦ 30000 [ms] / ◠ 1000 [ms] Lock-Out time ⚙ 0 – 60000 [ms] / ◦ 30000 [ms] / ◠ 1 [ms]		☞ Set the length of time that the active power must remain above the lock-in / lock-out power level before control is activated.
	1 2 3 4	Dead time ⚙ 0 – -10000 [ms] / ◦ 0 [ms] / ◠ 1		☞ Set the intentional delay for the start of the Q(U) function.
	1 2 3 4	Output gradient limitation increase & Output gradient limitation decrease ⚙ 1 – 65534 [% Slim / min] / ◦ 65534 [% Slim / min] / ◠ 1		1. Maximum change in the reactive power in the event of a change to overexcited mode. 2. Maximum change in the reactive power in the event of a change to underexcited mode.
	1 2 3 4	Settling time ⚙ 1000 – 120000 [ms] / ◦ 1000 [ms] / ◠ 10		☞ Set the response speed of the control.
	1 2 3 4	Minimum cos-phi Q1 - Minimum cos-phi Q4 ⚙ 0- 1 / ◦ 0 / ◠ 0001		☞ Enter the minimum cos ϕ factor for quadrants 1 and 4.
	1 2 3 4	Voltage dead band ⚙ 0 – 5 [% Uref] ◦ 0.0 ◠ 0.1		☞ Set voltage dead band in %.
	1 2 3 4	Q(U) Offset (temporary) U offset ⚙ -100 – 100 [% Slim] / ◦ 0.0 [%Slim]/ ◠ 0.1 Q offset ⚙ -100 -100 [% Slim] / ◦ 0.0 [%Slim]/ ◠ 0.1		☞ Set the intended Q or U offset for the function.
	1 2 3 4	Q minimum ⚙ 0 - 100 [% Slim]/ ◦ 0 [%Slim]/ ◠ 0.1		☞ Set the reactive power Q to a minimum value.
		⚙ Under-excited | over-excited		☞ Select the type of phase shift. **NOTE: Under-excited relates to inductive load, over-excited relates to capacitive load.**

EN-US

Country-spec. Settings	Level	Display/ Setting		Action in this menu/meaning
	1 2 3 4	Q maximum 0 - 100 [% Slim]/ 0 [%Slim]/ 0.1		☞ Set the reactive power Q to a maximum value.
		Under-excited | over-excited		☞ Select the type of phase shift. **NOTE: Under-excited relates to inductive load, over-excited relates to capacitive load.**
US, UD	1 2 3 4	Autonomous adjustment Vref Check to enable		☞ When autonomous adjustment is activated, the reference voltage of the reactive power function is adjusted to the measured voltage using a PT1 filter. This dynamically shifts the Q(U) characteristic curve.
US, UD	1 2 3 4	Time constant Vref adjustment 300 – 5,000 [s] 300 s		☞ Set the time constant for adjusting the dynamic reference voltage.
	1 2 3 4	Q(U) active curve 1 – 4		☞ Select the active curve. **NOTE: Up to 4 characteristic curves can be configured independently and one of them can be activated for regulation each time.**
	1 2 3 4	Priority mode Q-Priority | P-Priority		☞ Set priority for reactive power - Q or active power - P. **NOTE: When it comes to P-priority, the reactive power adjustment range is limited subject to the active power that is currently available and fed in.**
	1 2 3 4	Number of nodes 2 – 10		**NOTE: The maximum number of configurable nodes depends on the selected grid type.** ☞ Specify the number of nodes.
	1 2 3 4	Node 1- Node 10 Power / Excitation / Voltage 0 – 100 [% Slim]/ 43.6 [%Slim]/ 0.1		☞ Set the reactive power of the node as a percentage of the maximum power.
		Over-excited | under-excited		☞ Select the type of phase shift. **NOTE: Over-excited relates to a capacitive load, under-excited relates to an inductive load.**
		0 – 125.0 [% Unom] / 90 … 110.0 [% Unom] / 0.1 [% Unom]		☞ Enter the voltage of the node in volts. **NOTE: The voltage values of the nodes must increase continuously. At voltages below the 1st node and voltages above the last node, the reactive power value of the 1st or last node is used each time.**
	1 2 3 4	FRT (Fault Ride Through)		**NOTE: The device supports dynamic grid stabilization (Fault Ride-Through). More detailed information at** [See section 10.3 Page 80]

EN-US

Country-spec. Settings	Level	Display/ Setting		Action in this menu/meaning
	1 2 3 4	Operating mode ☑☰ ON | OFF		☞ Select a control process. **On**: Activates dynamic grid support using dynamic reactive current. **Off**: Deactivates dynamic grid support using dynamic reactive current. Dynamic grid support remains active on account of immunity to interference.
		Setting - Manual | Predefined zero current		☞ Select a control process.
		Priority – Reactive current limitation | Active current priority		☞ Select a control process.
	1 2 3 4	Constant k positive sequence dip & Constant k positive sequence swell ⚙ k 0 – 10 ◦ 2 ◓ 0.1		☞ Set amplification factor k for the pos. sequence for drop and increase in the grid voltage.
	1 2 3 4	Constant k negative sequence dip Constant k negative sequence swell ⚙ k 0 – 10 ◦ 2 ◓ 0.1		☞ Set amplification factor k for the neg. sequence for drop and increase in the grid voltage.
	1 2 3 4	Dead band ⚙ 2 – 120 [% Uref] ◦ 10.0 ◓ 0.1		☞ Set dead band in %.
	1 2 3 4	Dynamic reactive current only ☑☰Off | On		**NOTE: With activated FRT mode, the pre-fault reactive current can be added.** ☞ If necessary, activate pre-fault reactive current.
	1 2 3 4	Dead band mode ☑☰Mode 1 | Mode 2		☞ Select dead band mode for the active control process.
	1 2 3 4	Reference voltage ⚙ 80.0 – 110.0 [% Unom] ◦ 100 ◓ 0.1		☞ Set reference voltage for the active control process.
	1 2 3 4	Minimum operating voltage deactivation ⚙ 0.0 – 100 [% Unom] ◓ 0.1 & Maximum operating voltage deactivation ⚙ 100.0 – 125.0 [% Unom] ◓ 0.1		☞ Set voltage range for the active control process.

EN-US

Country-spec. Settings	Level	Display/ Setting	Action in this menu/meaning
	1 2 3 4	Zero current activation undervoltage 0 – 80 [% Unom] 0.1 Zero current activation overvoltage 110 – 141.8 [% Unom] 0.1	☞ Set voltage threshold for zero current mode. If one or more phase/phase or phase/neutral conductor voltages move below or above the configured threshold, the inverter changes to zero current mode. The total current is regulated to virtually zero.
	1 2 3 4	Reactive current limitation 0 – 100 [% Imax] / 100 [% Imax] / 1	☞ Set the reactive power limitation.
	1 2 3 4	Minimum support time 1000 – 15000 [ms] / 5000 [ms] 10	☞ Set minimum support time.
	1 2 3 4	Overvoltage protection	**NOTE: Shutdown carried out within a grid cycle.**
	1 2 3 4	Transient overvoltage protection 114.8 – 127.5 [% Unom] / 127.5 / 0.1%	1. Set the transient overvoltage protection. 2. Confirm the action field.
	1 2 3 4	External grid protection disconnection	**NOTE: Opportunity to detect the external grid protection devices**
	1 2 3 4	External grid protection No device | Powador-protect | third-party device	☞ Select the device.
	1 2 3 4	DC Disconnection	**NOTE: If the function is deactivated, a connected Powador-protect and received signal will not trigger an interruption of the DC component.** ☞ Activate DC switch-off for every fault. This also disconnects the DC supply.
	1 2 3 4	Powador-protect	**NOTE: Configures the grid shutdown via a Powador protect connected to the "INV OFF" input of the device.**
		Powador-protect operation mode Auto | On | Off	↻ Auto/On: A Powador-protect is operating in the photovoltaic plant and is connected to the device at the „INV OFF“ input. ☞ Set the operating mode for Powador-protect. **Auto**: The device automatically detects a Powador-protect integrated into the photovoltaic plant. **On**: The digital signal of the Powador-protect must be present at the digital input of the device for the device to start with feed-in. **Off**: The device does not check whether a Powador-protect is integrated into the PV plant.

EN-US

Country-spec. Settings	Level	Display/ Setting	Action in this menu/meaning
	1 2 3 4	3rd party device	**NOTE: Configures the grid shutdown via a 3rd party device connected to the digital input of the device**
		3rd party device name	☞ Enter the name of the external device.
		3rd party device operation mode ☑ ON | OFF	☞ Select operating mode. **On:** The digital signal of the external device must be present on the digital input so that the device does not shut down. **Off**: The device does not check whether an external system is integrated into the PV system.
	1 2 3 4	DCSettings	Input masks for DC source (PV generator/battery)
	1 2 3 4	Extended DC voltage range ☑ Active / disabled ○ disabled	**WARNING! Only use the function to enable the mains connection if the actual battery voltage $U_{DC,ACT}$ is lower than the minimum DC voltage $U_{DC,MIN}$ that is required for the AC mains connection.**
	1 2 3 4	Minimum battery voltage ⚙ 668/801/1002 – 1315 [V] / ○ [See section 4 Page 14] / ◠ -	**NOTE: The minimum battery voltage is specified automatically in accordance with the country-specific grid code.** ☞ Apply the settings in accordance with the specifications of the system integrator.
UD, IL	1 2 3 4	Increased maximum battery voltage ⚙ 1315 – 1450 [V] / ○ 1315 / ◠ 0.1	☞ Set increased maximum battery voltage for country setting "User defined" or "Israel".
	1 2 3 4	Communication	Input screens for configuring the interfaces.
	1 2 3 4	Ethernet	**NOTE: Opportunity to parametrise the Ethernet interface.**
	1 2 3 4	IP Settings	**NOTE: Parametrization of network access.**
	1 2 3 4	DHCP ☑ Check to enable	☞ Activate or deactivate the DHCP. **On**: Once the DHCP server becomes available, the IP address, subnet mask, gateway and DNS server are automatically applied and the aforementioned menu items are filled in. **Off**: Apply settings manually.
	1 2 3 4	IP Address	☞ Allocate a unique IPv4 address in the network.
	1 2 3 4	Subnet Mask	☞ Assign a subnet mask.
	1 2 3 4	Default gateway	☞ Enter IPv4 address of the gateway.
	1 2 3 4	DNS server settings via DHCP ☑ Check to enable	☞ Activate or deactivate the DNS server from DHCP. **On**: Once the DHCP server becomes available, the IP address is automatically applied and the aforementioned menu options are filled out. **Off**: Apply settings manually.
	1 2 3 4	Primary DNS & Secondary DNS (optional)	1. Enter IPv4 address of DNS server. 2. Confirm the action field.
	1 2 3 4	Modbus	**NOTE: Opportunity to set the Modbus port.**

EN-US

Country-spec. Settings	Level	Display/ Setting	Action in this menu/meaning
	1 2 3 4	Modbus TCP / UDP Activation ☑ Check to enable	☞ Allow Modbus TCP / UDP reading access.
	1 2 3 4	Modbus TCP / UDP Write access ☑ Check to enable	☞ Allow Modbus TCP write access. Enabling the write access allows system critical settings to be changed over Modbus TCP. Really enable write access? ☞ Confirm the action field.
	1 2 3 4	Modbus TCP / UDP Port	☞ Set up network port.
	1 2 3 4	MQTT	**NOTE: The MQTT protocol is used to implement the advanced functions between the Segment Controller and the inverter (in particular, firmware updates, distribution of device configurations etc.).**
	1 2 3 4	Broker IP	1. Displays the IP address transmitted by the Segment Controller. . **NOTE: The standard settings allow for successful communication with the Segment Controller.** 2. Confirm the action field.
	1 2 3 4	Broker port	
	1 2 3 4	NTP	**NOTE: An NTP server receives its accurate time information from a precise time source and makes it available to other devices on the network via the NTP protocol.**
	1 2 3 4	NTP Server ☑ Check to enable	1. Obtain server addresses via DHCP or enter them under NTP Server 1&2. Activate server if necessary. 2. Confirm the action field.
	1 2 3 4	NTP server 1	☞ Enter the server address.
	1 2 3 4	NTP server 2	☞ Enter an alternative server address.
	1 2 3 4	Protocol ⚙ KACO Legacy **or** Modbus RTU	☞ Define communication protocols. **NOTE: The selection ensures that communication can only take place via the existing commands.** ☞ Confirm the action field.
	1 2 3 4	Modbus RTU	☞ Set up network port.
	1 2 3 4	Modbus RTU Write access ☑ Check to enable	1. Allow Modbus RTU write access. 2. Confirm the action field.
	1 2 3 4	Features / Functions	**NOTE: Input screens for advanced device functions**
	1 2 3 4	Digital Inputs / Outputs	**NOTE: Opportunity to configure the fault signal relay [ERR].**
	1 2 3 4	Relay ☑ Positive logic | Negative logic ☑ inactive | active	1. Select the type of logic. 2. Select the form of activity. 3. Confirm the action field.
	1 2 3 4	System Control	**NOTE: Display of the values transmitted by a connected EMS. Controls the device even without EMS.** **NOTE: Default values are active after every device restart.**

EN-US

	Control mode EMS / Local EMS / Active	**NOTE: Changes only affect the selected mode.** ☞ Select EMS or Local mode. **Note:** In EMS mode, the values for Local mode are read-only. In Local mode, the values for Local mode can be changed by Service and the installer.
	Button: Reload 1 – 10 [sec] 1 [sec] Repeat: Active	☞ Displayed values: -**cyclically**: every second (default setting) or - **manually** via the Refresh button.
	Power unit state	**NOTE: View the status of the power unit**
	Requested status Mode: Off, Standby, Connected	**Connection status:** see in the "SunSpec Information Model Reference KACO" document under Model- 64201 "enum16" and in the integration manual.
	Column: Local	Device reacts to the values set locally via the web interface**.**
	Column: EMS	Device reacts to the values sent by the EMS.
	Column: Active	Device shows the status of the power unit.
	Current status	System status is displayed.
	Buttons in the menu: Device control	**NOTE: Save settings for watchdog, battery limits, P and Q settings.**
	Reset	☞ Reset to default value **or**
	apply and save	☞ Set value and save **or**
	accept	☞ Accept parameters for current session.
	Watchdog time	**NOTE: Possibility to monitor the entire system**
	Local / EMS / Active 30 [s]	☞ Define time for monitoring the connection.
	Battery limits (temporary)	☞ **NOTE: Possibility to test which battery limits are received by the EMS. This can optionally be set to detect faults.**
	Minimum discharge voltage 0.1	☞ Set minimum discharge voltage.
	Maximum discharge current 0.1	☞ Set maximum discharge current
	Minimum discharge current 0.1	☞ Set minimum discharge current.
	Maximum charge voltage 0.1	☞ Set maximum charging voltage
	Maximum charge current 0.1	☞ Seit maximum charging current
	Minimum charge current 0.1	☞ Set minimum charging current for the battery
	Battery limits enabled 0 / 1	☞ All set values are transferred and used with 1.
	P Default	**NOTE: Define specification of the active power**
	Setpoint active power 0 – 100 [% Pmax]/ 0 [% Pmax] 0.1	☞ Set the setpoint of the active power.

EN-US

Power gradient increasing & power gradient decreasing 1 – 65534 [% Slim / min] / 65534 [% Slim / min / 1		1. Maximum change in the reactive power %S_{lim}/min in the event of a change to over-excited mode. 2. Maximum change in the reactive power %S_{lim}/min in the event of a change to under-excited mode.
Settling time 1000 – 12000 [ms] / 5000 [ms] / 10		☞ Set the settling time in the event of an abrupt change in the reactive power target value.
Active power enabled 0 / 1		☞ All set values are transferred and used with 1.
Q setpoint		**NOTE: Define Q setpoint**
Reactive power setpoint 0 – 100 [% VarMax] / 0 [% VarMax]/ 0.0		☞ Set the reactive power Q to a fixed value
Output gradient limitation increase & Output gradient limitation decrease 1 – 65534 [% Slim / min] / 65534 [% Slim / min] / 1		1. Maximum change in the reactive power in the event of a change to overexcited mode. 2. Maximum change in the reactive power in the event of a change to underexcited mode.
Settling time 1000 – 12000 [ms] / 5000 [ms] / 10		☞ Set the settling time in the event of an abrupt change in the reactive power target value.
Control Mode Reactive power Off / 0 / 1/ Off		☞ Select reactive power setting. - 0 = no reactive power - 1 = set reactive power to a fixed value
Reactive power activated 0 / 1		☞ All set values are transferred and used with 1.
DC Disconnection		**NOTE: If the function is deactivated, a connected Powador-protect and received signal will not trigger an interruption of the DC component.** ☞ Activate DC switch-off for every fault. This also disconnects the DC supply.
EMS communication timeout		**NOTE: The menu item is only available in the EMS in the battery.**
Operating mode ON | OFF		☞ Switch on the function for monitoring the system.
Zeit 1 – 600 [s] 30 s		☞ Specify the interruption period by which time the signal must appear.
Service / Maintenance		**NOTE: Opportunity to perform updates, retrieve service/parameter data and grant remote access.**
Firmware update		**NOTE: Opportunity to update the device. Parameter data are not overwritten when the firmware is updated.**

EN-US

1 2 3 4	Instant Update	1. Select and confirm the firmware update file with the "Browse..." button 2. Load the firmware with the "Browse" button. 3. Note: During the entire update process, the AC and DC supply of the inverter must be ensured. A loss of supply may damage the device. Continue with update?
1 2 3 4	Check for Available software packages	↻ Network connection available. 1. Checks for available device updates online using the existing network connection. 2. Start the firmware update by clicking the button.
1 2 3 4	Settings	**NOTE: Settings for updating the firmware via remote access.**
1 2 3 4	Allow remote firmware update ☑☰ Status	☞ Activate remote access for updates. Enter `firmware update URL` . 1. Enter `user name` and `password`. 2. Specify the `start` and `end time` for the update. 3. Confirm the action field.
1 2 3 4	Service	**NOTE: Opportunity to specify the service interval.**
1 2 3 4	Service Log	**NOTE: Display of all logged installations. You should also add all maintenance activities manually via the "Service" and "Installer" interfaces.** 1. Enter additional service activities (exception: "User" interface). 2. Export service logs, if necessary.
1 2 3 4	Export Service Package	**NOTE: Opportunity to send an error log to KACO new energy.** ☞ Press the Export button and send the file to our service staff.
1 2 3 4	Logging Management	**NOTE: Input screens for log and service data and default settings.**
1 2 3 4	Settings	Specify the interval for data capture and base meters.
1 2 3 4	User logging interval ⚙ 1 | 5 | 10 | 15 [minutes]/ ◦ 5	☞ Specify the time period between 2 log data recordings. **NOTE: Setting and time until memory is overwritten: 1 min – 5 days; 5 min – 4.5 years; 10 min – 9 years; 15 min – 14 years.**
1 2 3 4	Service logging interval ⚙ 1 – 120 [sec] / ◦ 10 [sec] /◓ 1	☞ Specify the time period between 2 log data recordings. **NOTE: Setting and time until memory is overwritten: 1 sec – 9 days; 10 sec – 92.5 days; 120 sec – 1,110 days**
1 2 3 4	DC-DSP logging interval ⚙ 1 – 120 [sec] / ◦ 10 [sec] /◓ 1	☞ Specify the time period between 2 log data recordings. **NOTE: Setting and time until memory is overwritten: 1 sec – 9 days; 10 sec – 92.5 days; 120 sec – 1,110 days**
1 2 3 4	PCU logging interval ⚙ 1 – 120 [sec] / ◦ 10 [sec] /◓ 1	☞ Specify the time period between 2 log data recordings. **NOTE: Setting and time until memory is overwritten: 1 sec – 9 days; 10 sec – 92.5 days; 120 sec – 1,110 days**
1 2 3 4	Analyze Log Data	**NOTE: All measurement data can be transferred to a USB stick by making individual and multiple selections.**
1 2 3 4	User logs ☑☰ cosPhi | fac (Hz) | Iac 1 (A) | Iac2 (A) | Iac3 (A) | idc (A) | Qac (var)	1. Select a date in the calendar. 2. Select measurement data from the dropdown field. 3. Update the measurement data. 4. Move the selected measurement data to the storage device or move the data selectively.
1 2 3 4	Parameter Management	**NOTE: Opportunity to reset set values as well as to import and export specific parameters.**

EN-US

1234	Factory setting	1. Compare all parameters / country-specific parameters / network-specific parameters with default setting. 2. If necessary, reset the parameters by clicking on the "Restore" button.
1234	Config. export.	1. Exporting parameters for device-independent settings / Export all settings. 2. Select the parameters for export into a file or the plant manager.
1234	Import Configuration	1. Select the parameter file using the "Browse" button. 2. Import the parameters by clicking on the “Upload” button.
1234	Password protection Country selection | Connection conditions | Advanced islanding detection | FRT | ... | ... |	1. Opportunity to set up password protection for individual parameters. 2. Confirm the action field.
1234	Installation Wizard	**NOTE:** The installation wizard is described in the chapter [See section 8.2 Page 31] When the installation process is complete, the following text appears: Installation wizard was completed
1234	Network Statistics	**NOTE: Sent and received data packets indicator** ☞ Press Refresh.
1234	Remote Access	When remote access is enabled, KACO can access the device remotely and assist you. ☞ Activate on request.
1234	History	**NOTE: Displays all of the actions performed in the system and on the web interface.**
1234	Account Management	1. Enter your User name . 2. Enter your new user-defined Password . **NOTE: Following initial start-up, it is necessary to change the KACO specific** Change password
1234	Restart the Device	**NOTE: Transfer safety-related parameters to a storage medium.** ☞ If necessary, re-start the device.

NOTE

Validity for associated certificate according to country settings

With regard to the selection of country settings, KACO new energy attests:

1. that the relevant certificates are only valid if the corresponding country settings have been selected.
2. that all configured grid parameters must be configured in accordance with the requirements of the grid operators.
3. that the configuration of parameters using IEEE 1547: 2003 table 1 is possible but is only permitted if it is requested by the grid operators.

9.5 Monitoring the device

↻ You have connected the device to the network.

1. When using a DHCP server: Activate DHCP.
2. For manual configuration (DHCP off):
3. Open the Settings/Network menu.
4. Assign a unique IP address.
5. Assign a subnet mask.
6. Assign a gateway.

EN-US

7. Assign DNS server.
8. Save your settings.

9.6 Carry out firmware update

NOTE

Ensure the active DC power supply of the device

It is only possible to update all of the device's components to the most current firmware version in this operating state.

NOTE

Ensure DC power supply during initial start-up

The DC power supply must be guaranteed during initial start-up. [9]

The sequence of the settings required for initial start-up is pre-set in the configuration assistant.

⚠ CAUTION

Damage to the device from incorrect power supply

The update can fail if the power supply is interrupted during the update process. Parts of the software or of the device itself can then be damaged.

1. Never disconnect the DC and AC power supply for or during a firmware update.
2. Do not remove the USB stick during a firmware update.

Performing a firmware update

You can upload the current firmware to the devices directly via the web interface. Refer to the menu items under "Firmware Update" See table : Configuration via web user interface [Page 62]

The firmware can be found on the website kaco-newenergy.com under Downloads / Software.

Optional There is the of updating the firmware at the USB socket of the device. Observe the following procedure:

↻ Ensure that the power supply is connected.
↻ Pay attention to signal elements (LEDs) and statuses during the process.
↻ Note the description of the LED states during the process. [See section 9.2 Page 36]

1. Load the firmware from the KACO website onto a FAT32-formatted USB stick.
2. Insert the USB stick into the USB port of the device.

   ⇨ The update process starts once the firmware has been validated and the status LEDs flash to indicate this.
3. If the "Operation" and "Feed-in" status LEDs **flash slowly** at the same time, **remove** the USB stick.
4. Once the update has been successfully completed, all 3 LEDs light up briefly several times and the device restarts.
5. Remove the USB stick from the USB socket.
6. If an error occurs, the update procedure must be repeated.

⇨ Update process completed successfully.

You can check to see if the update was successful in the menu:

Displaying the firmware version

☞ Open the Information / SW version menu.

⇨ The device will display the versions and checksums of the software that is currently loaded.

[9] It is only possible to configure the grid parameters with DC voltage. The further parameters can also be configured with a present AC voltage.

EN-US

9.7 Access via Modbus

NOTE

Required usage information for remote access

In order to make use of the Modbus functionality, we recommend using the "SunSpec-Modbus-Interface" specification we have made available for the firmware version installed on your device.

Follow the description in the document "Modbus-Protokol.pdf" in order to use the two Excel files with a high level of process reliability.

↻ Firmware version of device is identical to the specifications of the Sunspec® Modbus®.

1. Enable the entry `Network – Modbus TCP – Operation mode` / `Network services – Modbus TCP – Operation mode` in the menu on the device or on the web interface.
2. If necessary, allow `write access`.
3. Set up the `Port` for access. [Default: `502`]

⇨ Access via Modbus enabled.

EN-US

10 Specifications

10.1 Reactive power control

Reactive power can be used in electrical energy supply networks to bolster the level of voltage. As such, feed-in inverters can contribute to statistical voltage stability. Reactive power brings about a voltage drop at the inductive and capacitive components of the equipment which can either bolster or reduce the level of voltage. If the generating plant draws inductive reactive power while active power is being fed in, part of the voltage swing caused by the active power feed can be compensated for by the supply of reactive power.

This reactive power mode and the respective control process are specified by the grid operator. If no control process has been specified, then the plant should be operated using a reactive power specification of 0%.

10.1.1 Operating power range depending on grid voltage

The device can be operated within the respective fixed voltage range provided. The maximum apparent power is stated in the following table. In the event of undervoltage determined by the maximum continuous current subject to the grid voltage.

The following figures show the reactive power operating range subject to active power and the apparent power operating range depending on the grid voltage for various devices.

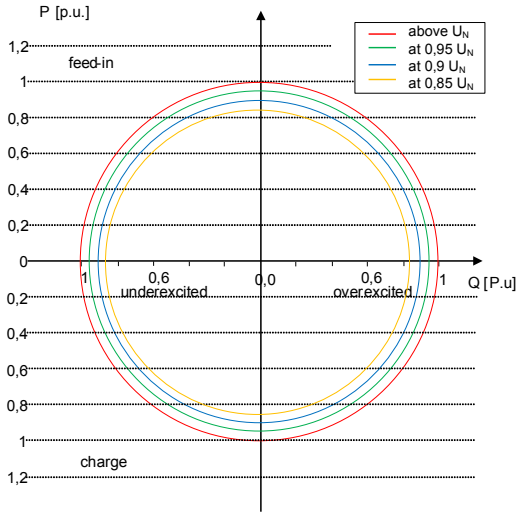

Fig. 45: P-Q operating range for bp gridsave 92.0 TL3-S

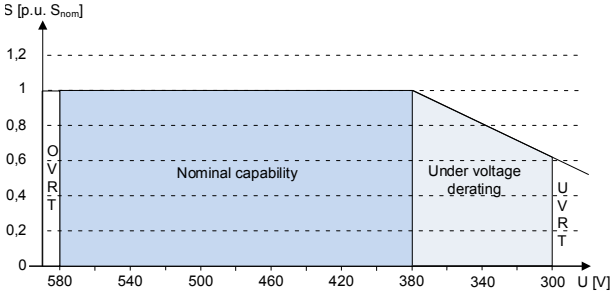

Fig. 46: Apparent power subject to the grid voltage for bp gridsave 92.0 TL3-S

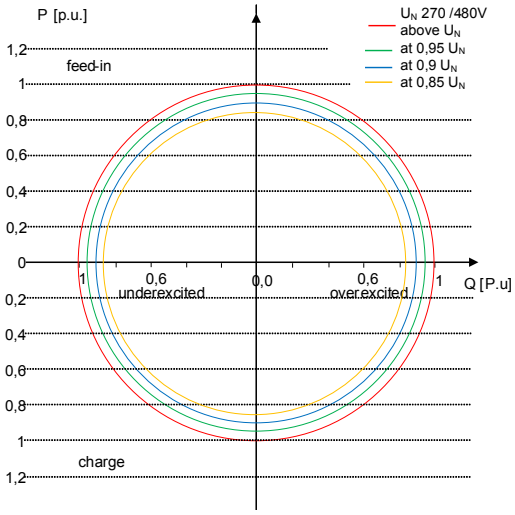

Fig. 47: P-Q operating range for bp gridsave 110 TL3-S

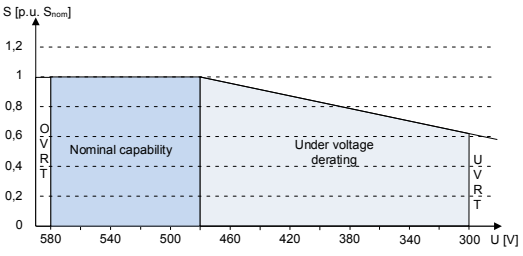

Fig. 48: Apparent power subject to the grid voltage for bp gridsave 110 TL3-S

EN-US

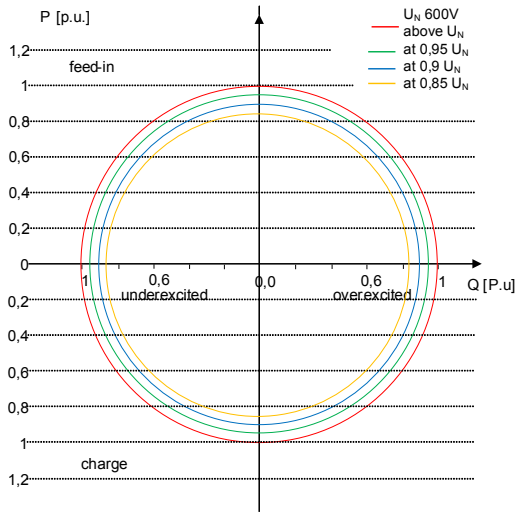

Fig. 49: P-Q operating range for bp gridsave 137 TL3-S

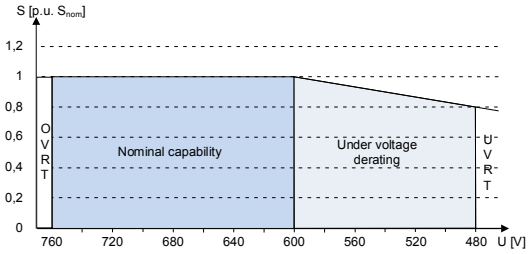

Fig. 50: Apparent power subject to the grid voltage for bp gridsave 137 TL3-S

10.1.2 Dynamics and accuracy

In all control methods the specified target value at the inverter's connection terminals is adjusted using a stationary deviation of the reactive power of maximum 2% S_N. This maximum deviation always relates to the specified value as reactive power.

If the power factor cos ϕ is specified in the control method, then the deviation relates to the reactive power value brought about by the current power level.

The transient response of the control methods is determined by a PT-1 filter. In this case, the settling time corresponds to 5 Tau, or in other words, achieving approx. 99% of the final value for a PT-1 filter. Subject to the control method selected, there are also other parameters that determine dynamic behavior.

10.1.3 Reactive power functions

The following functions for controlling the reactive power are implemented in the devices listed above:

- cos ϕ constant
- Q constant
- cos ϕ (P)
- Q(U) 10 nodes

NOTE: Reactive power is prioritised in the basic setting in all methods, but this can also be deactivated accordingly. The priority can be selected when using the Q const. and the Q(U) mode. The maximum possible active power that can be fed in is reduced in line with the P-Q operating range when the maximum grid power is reached.

Model	Parameter	Scaling factor	R/RW	Range	Description
126.	ModEna	ModEna	RW	⚙ 0 / 1	The reactive power method that is selected in the device can only be indirectly activated/deactivated via Sunspec.
123.	VArMaxPct	VArPCt_SF	RW	⚙ 0-100 [$\%_{Smax}$]	Setpoint of the reactive power can be adjusted depending on the set maximum apparent power.
	Q constant				
123.	VArPct_RvrtTms		RW	⚙ 0 – 1000 [s]	Sets the time after which the inverter, if it does not receive a new reactive power specification, falls back to the previously valid reactive power procedure.
	Timeout				

Model	Parameter	Scaling factor	R/RW	Range	Description
					If the timeout `Timeout` is set to `0` seconds, the transmitted reactive power specification is permanently retained, even in the event of a communication failure. Note: When the unit is restarted, the `Timeout` is reset to the default value.
123. Settling time	`VArPct_RmpTms`		RW	1000 – 120000 [ms]	Determines the dynamic behavior in the event of a change in the active power set value. The active power is changed according to a PT-1 characteristic curve with a settling time of 5 Tau. **NOTE: The settling time is overlaid with the increasing and decreasing gradient.**

cos φ(P)

In the cos ϕ (Pn) operating mode, the setpoint value of cos ϕ and the setpoint for the reactive power derived from it are continuously calculated depending on the actual power level. This function ensures that grid support is provided by the reactive power when a significant voltage boost is anticipated due to a high feed level. In this case, a characteristic curve is specified which can be used to configure up to 10 nodes, value pairs for active power and cos ϕ. The active power is entered as a % in relation to the set maximum apparent power Slim. Other parameters allow you to limit functionality and to limit activation to certain voltage ranges.

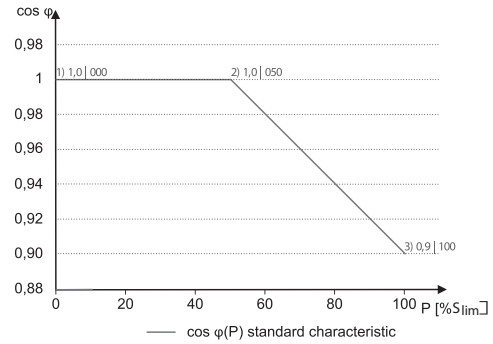

Fig. 51: cos ϕ (P) standard characteristic curve with 3 nodes

In Q(U) 10 nodes mode, the set value of the reactive power is calculated continuously as a function of the grid voltage. This function ensures that grid support is provided by reactive power as soon as the voltage actually deviates from the target voltage. In this case, a characteristic curve is specified which can be used to configure up to 10 nodes, value pairs for voltage and reactive power. Other parameters allow to limit functionality and to limit activation to certain power levels as well as parametrize the transient response.

The positive sequence voltage is used to calculate the reactive power target value for three-phase units.

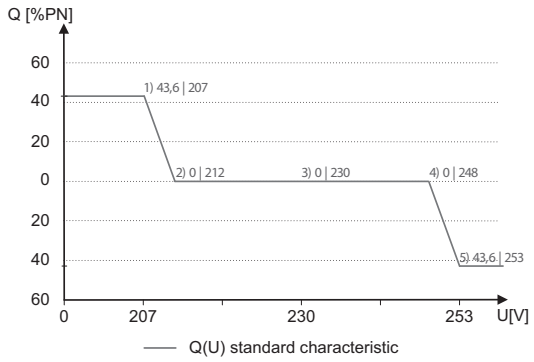

Fig. 52: Q(U) standard characteristic curve with 5 nodes

EN-US

Q(P) 10 nodes

When it comes to Q(P) mode, the nominal value of the reactive power is continuously calculated depending on the active power. In this mode, a characteristic curve is specified which can be used to configure up to 10 nodes, consisting of value pairs for power and reactive power. The function allows the parameterization of the transient response.

The zero sequence power is used to calculate the reactive power target for three-phase units.

10.1.4 Parameters for reactive power control

Country-spec. Settings	Menu level	Display/ Setting	Action in this menu/meaning
		Mode ☑☰ Specification cos-phi | Specification Q | Cos-phi(P/Plim) | Q(U) | Q(P)	Select the active method for Reactive Power Control (RPC) and define the parameters in the respective method.
		Cos-phi constant	
		Cos-phi constant ⚙ 0.3 – 1 / ◦ 1 / ◠ 0.001	Specified power factor.
		☑☰ Over-excited | under-excited	Reactive power mode: Under-excited relates to inductive load, over-excited relates to capacitive load.
		Power gradient increasing & power gradient decreasing ⚙ 1 – 65534 [% S_{lim}/min] / ◦ 65534 [% S_{lim}/min] / ◠ 1	Maximum change in the reactive power %S_{lim}/min in the event of a change to overexcited mode. **NOTE: The gradient is overlaid with the settling time.**
		Settling time ⚙ 1000 – 120000 [ms] / ◦ 1000 [ms] / ◠ 10	Determines the dynamic behavior in the event of a change in the cos ϕ set value. With a reactive power change, the cos ϕ is changed according to a PT-1 characteristic curve with a settling time of 5 Tau.
		Q constant	
		Q constant ⚙ 0 – 100 [% Slim]/ ◦ 0 [% Slim] / ◠ 0.1	Set as a percentage of the maximum reactive power.
		☑☰Under-excited | over-excited	Reactive power mode: Under-excited relates to inductive load, over-excited relates to capacitive load.
		Output gradient increase & Output gradient decrease ☑☰ increasing | decreasing ⚙ 1 – 65534 [% S_{lim}/min] / ◦ 65534 [% S_{lim}/min] / ◠ 1	In addition to configuring the dynamic behavior using the setting time corresponding to a first-order filter, the reactive power setting can be determined by a maximum gradient – this means the maximum change in the reactive power per time period. Maximum change in the reactive power %S_{lim}/min in the event of a change to overexcited mode **NOTE: The gradient is overlaid with the settling time.**

EN-US

Country-spec. Settings	Menu level	Display/ Setting	Action in this menu/meaning
		Settling time ⚙ 1000 – 120000 [ms] / ◦ 1000 [ms] / ◠ 10	Determines the dynamic behavior in the event of a change in the Q target value. With a change of the reactive power or the lock-in and lock out voltage, the Q is changed according to a PT-1 characteristic curve with a settling time of 5 Tau.
		Cos-phi(P)	
		Lock-in voltage 10 – 126.6 [% Unom] / ◦ 80 [% Unom] / ◠ 1 [0.1]	The control is activated above this voltage.
		Lock-out voltage ⚙ 10 – 126.6 [% Unom] / ◦ 80 [% Unom] / ◠ 0.1	The control is deactivated below this voltage.
		Power gradient increasing & power gradient decreasing ⚙ 1 – 65534 [% S_{lim}/ min] / ◦ 65534 [% S_{lim}/ min] / ◠ 1	Maximum change in the reactive power %S_{lim}/min in the event of a change to overexcited mode. **NOTE: The gradient is overlaid with the settling time.**
		Settling time ⚙ 1000 – 120000 [ms] / ◦ 5000 [ms] / ◠ 10	Determines the dynamic behavior in the event of a change in the cos ϕ set value. With a change of the active power or the lock-in and lock out voltage, the cos ϕ is changed according to a PT-1 characteristic curve with a settling time of 5 Tau.
		Number of nodes ⚙ 2 – 10	Specify the number of nodes for the cos ϕ/(p/pn) characteristic curve.
		1. Stützstelle … 10. Stützstelle ⚙ 0V - Max. voltage in continuous operation	Power of the node as a percentage of the maximum power. For the 1st node, the power must be 0%; for the last node, the power must be 100%. The power values of the nodes must increase continuously. Note: Storage inverters only for feed-in operation
		⚙ 1 – 0,3 / ◦ 1 / ◠ 0.001	Reactive power of the node as a percentage of the maximum power
		⚙ Over-excited | under-excited	Reactive power mode Under-excited relates to inductive load, over-excited relates to capacitive load.
		Q(P) 10 nodes	
		Power gradient increasing & power gradient decreasing ⚙ 1 – 65534 [% S_{lim}/ min] / ◦ 65534 [% S_{lim}/ min] / ◠ 1	The rate of change of the output when the output power is increased is limited by the configured value. The rate of change of the output when the output power is decreased is limited to the configured value. **NOTE: The gradient is overlaid with the settling time.**
		Settling time ⚙ 200 – 60000 [ms] / ◦ 6000 [ms] / ◠ 1	Sets the dynamic behavior in the event of a change in the Q target value. With a change in the active power, the Q target value is changed according to a PT-1 characteristic curve with a settling time of 5 Tau.
		Number of nodes ⚙ 2 – 10	Specify the number of nodes for the Q(P) characteristic curve.

EN-US

Country-spec. Settings	Menu level	Display/ Setting	Action in this menu/meaning
		1. Stützstelle … 10. Stützstelle ⚙ 0 V – Max. voltage in continuous operation	Power of the node as a percentage of the maximum power. For the 1st node, the power must be 0%; for the last node, the power must be 100%. The power values of the nodes must increase continuously. Note: Storage inverters only for feed-in operation
		⚙1 – 0.3 / ◦ 1 / ◠ 0.001	Reactive power of the node as a percentage of the maximum power.
		⚙ Over-excited | under-excited	Reactive power mode: Under-excited relates to inductive load, over-excited relates to capacitive load.
		Q(U) 10 samples	
		Lock-in power ⚙ 0 – 100 [% S_{lim}] / ◦ 20 [% S_{lim}] / ◠ 1	Power threshold, function is activated if limit value is exceeded.
		Lock-out power ⚙ 0 – 100 [% S_n] / ◦ 5 [% S_n] / ◠ 1	Power threshold, function is activated if limit value is undershot.
		Lock-In time ⚙ 0 – 60000 [ms] / ◦ 30000 [ms] / ◠ 1000 [ms]	Length of time that the active power must remain below the lock-in power level before control is deactivated.
		Lock-Out time ⚙ 0 – 60000 [ms] / ◦ 30000 [ms] / ◠ 1000 [ms]	Length of time that the active power must remain below the lock-out power level before control is deactivated.
		Downtime ⚙ 0-10000 [ms] / ◦ 0 [ms] / ◠ 1	If the voltage switches from a characteristic curve section with Q=0 to a characteristic curve section with Q≠0 under active control, then the reactive power setting process is delayed by the set dead time. Once the dead time has expired, the control circuit is no longer subject to a delay and the set setting time determines the transient behavior.
		Output gradient increase & Output gradient decrease ☑ increasing | decreasing ⚙ 1 – 65534 [% S_{lim}/min] / ◦ 65534 [% S_{lim}/min] / ◠ 1	In addition to configuring the dynamic behavior using the setting time corresponding to a first-order filter, the reactive power setting can be determined by a maximum gradient – this means the maximum change in the reactive power per time period. Maximum change in the reactive power %S_{lim}/min in the event of a change to overexcited mode **NOTE: The gradient is overlaid with the settling time.**
		Settling time ⚙ 1000 – 120000 [ms] / ◦ 2000 [ms] / ◠ 10	Settling time in the event of an abrupt change in the reactive power target value (e.g. caused by a voltage jump). The transient behavior corresponds to a first-order filter (PT-1) with setting time = 5 Tau. **NOTE: The settling time is overlaid with the increasing and decreasing gradient.**
		Min. cos-phi Q1 - Min. cos-phi Q4 ⚙ 0 – 1 / ◦ 0 / ◠ 0.001	In the event of a significant voltage deviation, the maximum reactive power adjustment range can be limited by a minimum cos ϕ in order to prevent an excessive reactive power supply and, as a result, a significant reduction in the maximum active power that can be fed in.
		Q1	Minimum cos ϕ in overexcited operating mode (in-feed).

EN-US

Country-spec. Settings	Menu level	Display/ Setting	Action in this menu/meaning
		Q4	Minimum cos ϕ in underexcited operating mode (in-feed).
		Q2	Minimum cos ϕ in overexcited operating mode (charge).
		Q3	Minimum cos ϕ in underexcited operating mode (charge).
		Voltage dead band ⚙ 0 – 5 [% Uref] ◦ 0.0 ◠ 0.1	The control is activated above this voltage.
		Q(U) Offset (temporary) U offset ⚙ -100 – 100 [% Slim] / ◦ 0.0 [%Slim]/ ◠ 0.1 Q offset ⚙ -100 – 100 [% Slim] / ◦ 0.0 [%Slim]/ ◠ 0.1	Power threshold, function is activated if limit value is exceeded.
	1 2 3 4	Q minimum ⚙ 0 – 100 [% Slim]/ ◦ 0 [% Slim] / ◠ 0.1	☞ Set the reactive power Q to a minimum value.
		⚙ Under-excited | over-excited	☞ Select the type of phase shift. **NOTE: Under-excited relates to inductive load, over-excited relates to capacitive load.**
	1 2 3 4	Q maximum ⚙ 0 – 100 [% Slim] / ◦ 0 [%Slim] / ◠ 0.1	☞ Set the reactive power Q to a maximum value.
		⚙ Under-excited | over-excited	☞ Select the type of phase shift. **NOTE: Under-excited relates to inductive load, over-excited relates to capacitive load.**
US, UD		Autonomous adjustment Vref	The autonomous adjustment of the reference voltage enables a dynamic reactive power function. As a result, the reference voltage of the Q(U) characteristic curve is dynamically adjusted to the grid voltage via a PT1 filter.
US, UD		Time constant Vref adjustment ⚙ 300 – 5,000 [s] ◦ 300 s	The time constant defines the control speed at which the reference voltage of the Q(U) characteristic curve is equalized to the grid voltage.
		Priority mode ☑ Q priority | P priority	P-priority can be selected as an alternative to the standard setting Q-priority. When it comes to P-priority, the reactive power adjustment range is limited subject to the limited apparent power of the inverter and the active power that is currently available and fed in.
		Active curve ⚙ 1 – 4 / curve 1 TMP / curve 2 / curve 3 / curve 4	Up to four characteristic curves can be configured independently and one of them can be activated for regulation each time.
		Number of nodes ⚙ 2 – 10	Specify the number of nodes for the Q(U) characteristic curve.

EN-US

Country-spec. Settings	Menu level	Display/ Setting	Action in this menu/meaning
		1. Stützstelle … 10. Stützstelle **Power** | Voltage | Excitation 0 – 100 [% S_{lim}] / 43.6 [% S_{lim}] / 0.1	Power of the node as a percentage of the maximum power. For the 1st node, the power must be 0%; for the last node, the power must be 100%. The power values of the nodes must increase continuously.
		Power | **Voltage** | Excitation 0 – 125 [% S_{lim}] / 43.6 [% U_{nom}] / 0.1	Voltage of the node in volts The voltage values of the nodes must increase continuously. At voltages below the 1st node and voltages above the last node, the reactive power value of the 1st or last node is used each time.
		Power | Voltage | **Excitation** Over-excited | under-excited	Reactive power mode: Under-excited relates to inductive load, over-excited relates to capacitive load.

10.2 Regulating active power

Dynamics / accuracy

In all of the control methods described below the specified target value at the inverter's connection terminals is adjusted using a stationary deviation of the reactive power of maximum $2\%_N$ SN.

The transient response of the control methods is determined by a PT-1 filter. In this case, the settling time corresponds to 5 Tau, or in other words, achieving approx. 99% of the final value for a PT-1 filter. Subject to the control method selected, there are also other parameters that determine dynamic behaviour.

Methods for active power regulation

Methods for regulating the active power of feed-in inverters may be necessary for local management of load flows, for voltage stability in the distribution network and for ensuring the stability of the interconnected grid.

The device makes use of the following functions in order to regulate the active power. These are described in the following section:

- P target value (MPPT(communication))
- P limit (communication) P limit
- P(U) (characteristic curve) [See section 10.2.1 Page 74]
- P(f) (characteristic curve) [See section 10.2.2 Page 76]

10.2.1 Voltage-dependent power reduction P(U)

If it is not possible to compensate adequately for voltage increase in the upstream distribution network by consumption of reactive power, it may be necessary to curtail the active power. In this case, P(U) control is available for making optimum use of the capacity of the upstream grid.

P(U) control reduces the active power that is fed-in as a function of the grid voltage using a prescribed characteristic curve as a basis. The P(U) control is implemented as an absolute power limit. The actual power of the inverter may vary freely below this limit based on possible fluctuation of the available power or set point, but will never increase above the absolute power limit.

[See figure 53 [Page 75] and [See figure 54 [Page 75] are two example configurations. In case of the Figure 1 without hysteresis the function is activated once the voltage exceeds the configured voltage of data point 1 (dp1). The power limit follows the characteristic, a straight line between dp1 and dp2. The function is deactivated once the voltage falls below dp1. In case of [See figure 54 [Page 75] the function is activated once the voltage exceeds the configured voltage of dp2. dp1 is not activating the function in this case as the power limit remains at 100%. The power limit follows the characteristic, a straight line between dp2 and dp3, but due to the activated hysteresis, the power limit is not increased at falling voltage. The function is deactivated once the voltage falls below dp1.

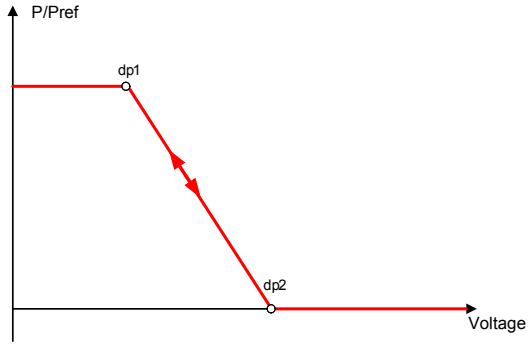

Fig. 53: Example characteristic without hysteresis

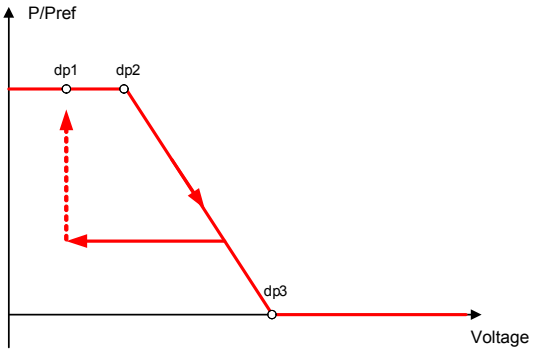

Fig. 54: Example characteristic with hysteresis and a deactivation threshold lower than the activation threshold.

In case of storage inverters, the function is only available in discharge, grid feed-in mode, not in battery-charge mode.

10.2.1.1 Parameters for P(U)

Country-spec. Settings	Menu level	Display/ Setting	Action in this menu/meaning
	1 2 3 4	Operation mode Off | On	☞ Activate the control process. **Off**: Deactivates dynamic grid support using dynamic reactive current. Dynamic grid support remains active on account of immunity to interference.
		Reference power Actual power | Nominal power	Specifies the power reference for the characteristic curve. 100 % here corresponds to the nominal power or the actual power at the time the function was activated, the time when the voltage passes the configured node.
	1 2 3 4	Evaluated voltage Maximum phase voltage | Positive phase sequence voltage	☞ Select the voltage to be rated. Specifies which voltage is evaluated in a three-phase system.
		Hysteresis mode Off | On	**Off:** In non-hysteresis mode, the active power is increased immediately with dropping voltage. **On:** In hysteresis mode, the power is not increased with dropping voltage. .
		Deactivation gradient 0 – 65,534 [% / min] / 100 [% / min] / 1	If the available power is above the actual output at the time of deactivation, the power increase back to the maximum power is limited. The limitation is implemented by an absolute power limitation that increases with a continuous gradient up to the maximum power. The actual power of the inverter may vary freely below this limit due to a possible fluctuation in the available power or the target value, but at no time increases above the absolute power limit.
		Deactivation time 0 – 60000000 [ms] / 100 [ms] / 1	Only evaluated with activated hysteresis mode: Monitoring time during which the voltage must remain below the lowest configured node before the function is deactivated.

EN-US

Country-spec. Settings	Menu level	Display/ Setting	Action in this menu/meaning
		Output gradient limitation increase & Output gradient limitation decrease 1 – 65,534 [% / min] / 65534 [% / min] / 1	Specifies the dynamic response on changing the active power for power increase. With a voltage change, the active power is changed with the specified gradient. The gradient is overlaid with the settling time. Specifies the dynamic response on changing the active power for power decrease. With a voltage change, the active power is changed with the specified gradient. The gradient is overlaid with the settling time.
		Settling time 1000 – 120000 [ms] / 2000 [ms] / 10 [ms]	Determines the dynamic behavior in the event of a change in the active power set value. With a voltage change, the active power is changed according to a PT-1 characteristic curve with a settling time of 5 Tau. **Note:** The settling time is overlaid with the increasing and decreasing gradient.
	1 2 3 4	Active curve 1 – 5	Select the active curve. **NOTE: Up to 5 characteristic curves can be configured independently and one of them can be activated for regulation each time.**
		Number of nodes 2-5 Power 0.0 – 100.0 [% P_{ref}] / 100.0 [% P_{ref}] / 0.1 Voltage 80.0 – 126.0 [% U_{nom}] / 112.0 [% U_{nom}] / 0.1	up to 5 support points definable The power value of the first and last value pair is also used as the maximum or minimum active power value that is valid across the limits of the characteristic curve.

10.2.2 P(f)

Adjusting the active power P(f) in the event of overfrequency and underfrequency

Feed-in inverters must assist with frequency stability in the grid. If the grid frequency leaves the normal tolerance range (e.g. ±200 mHz), then the grid will be in a critical state. In the event of overfrequency, there is a generation surplus, in the event of underfrequency, there is a generation deficit.

Power storage systems must adjust their effective feed-in power relative to the frequency deviation. In the case of overfrequency, the power adjustment is determined by a maximum feed limit, and in the case of underfrequency by a maximum charging limit. The actual power of the inverter may vary freely below this limit due to a possible fluctuation in the available power or the target value, but at no time increases above the absolute power limit.

$$P_{max-limit} = P_M + \Delta P$$

Fig. 55: Equation 1

$$\Delta P = g \cdot P_{ref} \cdot (f_1 - f)$$

Fig. 56: Equation 2

Equation 1 [See figure 55 [▶ Page 76] defines the maximum limit with ΔP corresponding to equation 2 [See figure 56 [▶ Page 76], P_M the actual power at the time of activation and P_{ref} the configured reference power.

$$\Delta P = \frac{1}{s} \times \frac{(f_1 - f)}{fn} \times Pref$$

Fig. 57: Equation 3

EN-US

$$g = \frac{1}{s \cdot f_n}$$

Fig. 58: Equation 4

In some standards, the power adjustment is not defined by a gradient (g), but by a slope (s), as given in equation 3 [See figure 57 [▶ Page 76]. The slope s can be converted into a gradient g according to equation 4 [See figure 58 [▶ Page 77].

During an overfrequency event, the frequency f is above the activation threshold f_1. Consequently, the expression ($f_1 - f$) is negative and ΔP corresponds to a reduction in the feed-in power or an increase in the charging power. During an underfrequency event, the frequency f is below the activation threshold f_1. Consequently, the expression ($f_1 - f$) is positive and ΔP corresponds to an increase in the feed-in power or a reduction in the charging power.

Depending on the operating point of the inverter at the time of activation and on the configured power reference and gradient, the inverter may switch from charging to feed-in mode in the event of underfrequency or from feed-in to charging mode in the event of overfrequency ().

The measurement accuracy of the frequency is greater than 10 mHz.

The specific mode of operation of the function is specified by the grid operator or by the applicable standards or grid connection directives. The configurability of the function makes it possible to adhere to a wide range of standards and directives. Certain configuration options are not available in some country settings because the pertinent standards or grid connection directives prohibit adjustments.

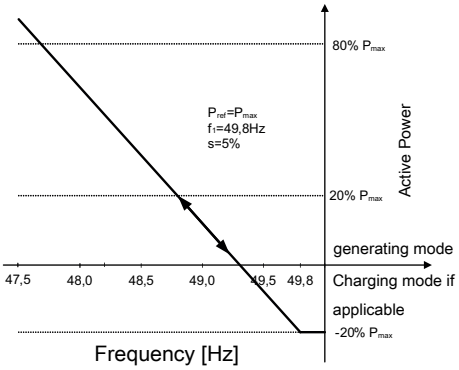

Fig. 59: Example behaviour without hysteresis (mode 2) At the time of activation, the inverter is in charging mode at 20% charging capacity

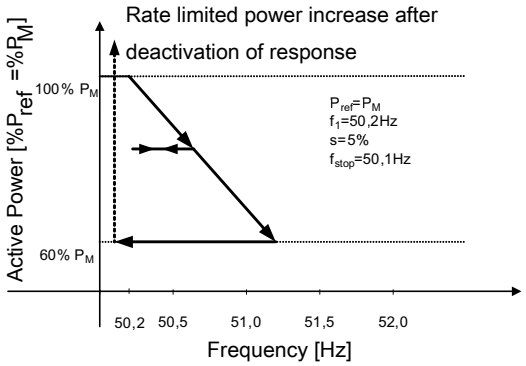

Fig. 60: Example behaviour with hysteresis (Mode 1)

10.2.2.1 Parameters for P(f)

Country-spec. Settings	Menu level	Display/ Setting	Action in this menu/meaning
		P(f) Operation mode ☑☰ Off | Mode 1 | Mode 2 | Mode 3	Activate or deactivate function. **Mode 1:** With hysteresis activated – Limit **Mode 2:** Without hysteresis activated – Limit **NOTE: In mode 1 & 2, the power below or above the characteristic curve (depending on over- or underfrequency) is adjusted via a Pset command. Plim can also limit the power with an active P(f) characteristic curve.** **Mode 3:** Without hysteresis activated – Set **NOTE: In mode 3, the pre-fault power is stored and the power moves along this characteristic curve.**

EN-US

Country-spec. Settings	Menu level	Display/ Setting	Action in this menu/meaning
		Power reference at overfrequency ☑☰ Instantaneous power | Nominal power Power reference at underfrequency ☑☰ Instantaneous power | Nominal power	**Power reference with overfrequency:** Power reference for power adjustment as in equation 2 and equation 3 for overfrequency incidents. **Power reference with underfrequency:** Power reference for power adjustment as in equation 2 and equation 3 for overfrequency incidents.
	1 2 3 4	Dynamic gradient mode ☑☰ ON | OFF	☞ Activate dynamic gradient. **NOTE: Gradient "Feed-in/charging with over/under frequency" is not displayed.**
		Gradient at underfrequency– feed-in ⚙ 0 – 200 (%/Hz) / ⚬ 40 (%/Hz) / ◠ 1 Gradient at overfrequency – feed-in ⚙ 0 – 200 (%/Hz) / ⚬ 40 (%/Hz) / ◠ 1	**Gradient with underfrequency (feed-in):** Determines the active power adjustment in accordance with equation 2 and equation 3, subject to the frequency. Gradient for underfrequency incidents if the incident begins in feed-in mode. **Gradient with overfrequency (feed-in):** Determines the active power adjustment in accordance with equation 2 and equation 3, subject to the frequency. Gradient for overfrequency incidents if the incident begins in feed-in mode.
		Gradient at overfrequency – charging ⚙ 0 – 200 (%/ P_{ref} / Hz) ; ⚬ 40 (% P_{ref} /Hz) / ◠ 1 [Hz] Gradient with underfrequency – charging ⚙ 0 – 200 (%/Hz) ; ⚬ 40 (% P_{ref} /Hz) / ◠ 1 [Hz]	**Gradient with overfrequency (charging):** Determines the active power adjustment in accordance with equation 2 and equation 3, subject to the frequency. Gradient for overfrequency incidents if the incident begins in charging mode. **Gradient with underfrequency (charging):** Determines the active power adjustment in accordance with equation 2 and equation 3, subject to the frequency. Gradient for underfrequency incidents if the incident begins in charging mode.
		Gradient ⚙ 0 – 200 (%/Hz) ⚬ 66 (%/Hz)	Determines the active power adjustment in accordance with [See figure 56 [Page 76] and [See figure 57 [Page 76], subject to the frequency.
		Maximum dynamic gradient frequency ⚙ 50.22 – 70.5 [Hz] ◠ 0.01 [Hz] Minimum dynamic gradient frequency ⚙ 45 – 50 [Hz] ◠ 0.01 [Hz]	**Dynamic gradient maximum frequency:** If dynamic gradient mode is activated, the gradient is calculated in order to guarantee a linear power adjustment and reach the maximum charging power if the frequency rises to the maximum configured frequency. **Dynamic gradient minimum frequency:** If dynamic gradient mode is activated, the gradient is calculated in order to guarantee a linear power adjustment and reach the maximum feed-in power if the frequency drops to the minimum configured frequency.

EN-US

Country-spec. Settings	Menu level	Display/ Setting	Action in this menu/meaning
		Activation threshold at underframequency ⚙ 40 – 50 [Hz] / ◦ 40 [Hz] / ◓ 0.01 Activation threshold at overfrequency ⚙ 50 – 60 [Hz] / ◦ 50.02 [Hz] / ◓ 0.01	**Activation threshold (f1) underfrequency:** Determines the frequency threshold for activating the function in case of underfrequency incidents. The active power adjustment is activated if the frequency falls below the configured value and mode 1 or 2 is activated. In mode 2, the function is deactivated if the frequency rises above the configured value. **Activation threshold (f1) overfrequency:** Determines the frequency threshold for activating the function in case of overfrequency incidents. The active power adjustment is activated if the frequency rises above the configured value and mode 1 or 2 is activated. In mode 2, the function is deactivated if the frequency falls below the configured value.
		Threshold Area Lower limit [Hz] ⚙ 40 – 50 [Hz] / ◦ 47.5 [%/Hz] / ◓ 0.01	Only evaluated in mode 1. The function is deactivated if the frequency returns to the deactivation range and remains in this range for the duration of the deactivation time.
		Threshold Area Upper limit [Hz] ⚙ 50 – 60 [Hz] / ◦ 50.5 [%/Hz] / ◓ 0.01	
		P(f) Deaktivierungszeit ⚙ 0 – 6000000 [ms] / ◦ 0 [ms] / ◓ 1	Only evaluated in mode 1. The function is deactivated if the frequency returns to the range between the minimum and maximum deactivation threshold and remains in this range for the duration of the deactivation time.
		Deact. lim. time after fault ⚙ 0 – 1,000 [s] / ◦ 0 [ms] / ◓ 1,000 [s]	Only evaluated in mode 2&3. After the end of the fault, the change in active power is limited to the set gradient for the specified time.
		Deact. grad. incr. after fault & Deact. grad. decr. after fault ⚙ 0 – 65,534 [% / min] / ◦ 10 [% / min] / ◓ 1	Specifies the dynamic response on changing the active power for power increase and power decrease. Any change in active power is limited to the set value for the set duration.
		P(f) intentional delay ⚙ 0 – 5,000 [ms] / ◦ 0 [ms] / ◓ 1	The activation of the function based on the activation threshold is delayed by the configured time. Note 1: This function is regarded as critical for the stability of the transmission grid and is therefore prohibited by several national grid connection regulations. Note 2: This function is stipulated as a requirement by some domestic grid connection directives in order to prevent any negative impact on island detection. However, P(f) has no negative impact on KACO's enhanced island detection.

EN-US

Country-spec. Settings	Menu level	Display/ Setting	Action in this menu/meaning
		Output gradient limitation increase & Output gradient limitation decrease ⚙ 0 – 65,534 [% / min] / ◦ 65534 [% / min] / 1	Specifies the dynamic response on changing the active power for power increase and decrease. With a voltage change, the active power is changed with the specified gradient. **Note:** The gradient is overlaid with the settling time.
		P(f) deactivation gradient ⚙ 0 – 65534 [%S_{max} / min] / ◦ 10 [% S_{max} / min] / 1	If the available power is above the actual output at the time of deactivation, the power increase back to the maximum power is limited. The limitation is implemented by an absolute power limitation that increases with a continuous gradient up to the maximum power. The actual power of the inverter may vary freely below this limit due to a possible fluctuation in the available power or the target value, but at no time increases above the absolute power limit.

10.3 FRT

Dynamic grid support (Fault Ride Through)

A generator plant's ability to remain immune to voltage drops and voltage spikes in the supply system is a key element in establishing a reliable energy supply. Immunity to interference ensures that brief disruptions do not result in a loss of generation capacity in a larger range of an interconnected grid. Grid support by a fast feeding of residual current also limits the spatial extent of the incident.

With its dynamic grid support by way of immunity, the device has this characteristic. The ability to remain on the grid is particularly relevant. The protective settings also determine the device's ability to remain on the grid or not. Protective settings take the upper hand over the capacity of immunity to interference.

10.3.1 Dynamic grid support by way of immunity to interference

Interference immunity against undervoltage

Voltage drop above the limit curve in can be overcome without the need for shutdown from the grid. The feed-in power remains constantly within the limits of the maximum continuous current of the inverter.

If a reduction in power occurs, the power is brought back up to the pre-fault level within 100 ms of the voltage returning.

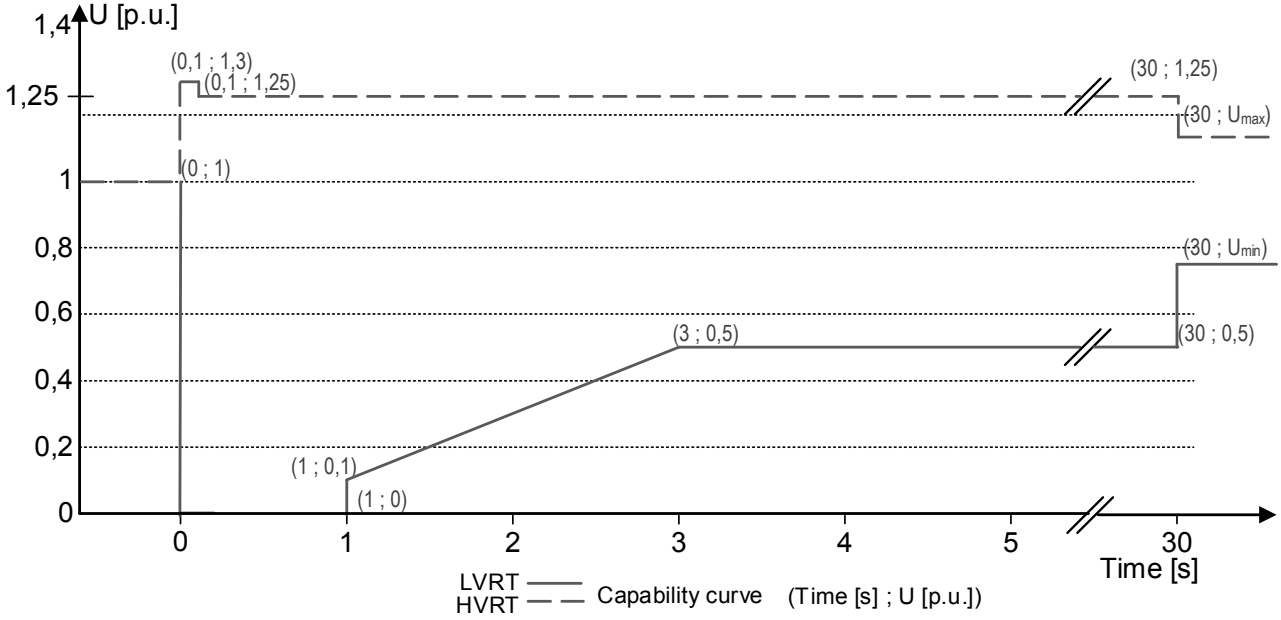

Fig. 61: Immunity to interference characteristic curve relative to the nominal voltage

EN-US

The inverters can ride through voltage fluctuations as long as the voltage level does not remain above the continuous operating voltage range for more than 100 s and does not exceed the short-term maximum operating voltage range (up to 100 s). The specific values for each inverter can be found here.

The interface protection (voltage, frequency, anti-islanding) integrated in the inverter can be set within a range that permits the above behaviour. However, if the interface protection setting limits the voltage-time characteristic curve, then the interface protection will trip and interrupt the ride-through as configured.

10.3.2 Dynamic grid support using a fast feeding of residual current

Bei Aktivierung der dynamischen Netzstützung durch schnelle Fehlerstromeinspeisung wird zusätzlich zu den oben beschriebenen Eigenschaften der Störfestigkeit gegen Einbrüche und Spitzen Fehlerstrom eingespeist.

Der Wechselrichter passt bei Auftreten eines Einbruches oder einer Spitze sofort seine Stromeinspeisung an, um die Netzspannung zu stützen. Die Stützung erfolgt bei einem Spannungseinbruch mit übererregtem Blindstrom (entsprechend einer kapazitiven Last), bei einer Spannungsspitze mit untererregtem Blindstrom (entsprechend einer induktiven Last). Im Blindstrom-Prioritätsmodus wird der Wirkstrom soweit reduziert, wie zur Einhaltung der Grenzen des maximalen Dauerstroms des Wechselrichters notwendig ist.

Ein Einbruch oder eine Spitze wird erkannt, wenn entweder der eingestellte normale Betriebsspannungsbereich durch mindestens eine Phase-Phase- oder Phase-Neutral-Spannung überschritten wird oder wenn ein Spannungssprung der Mit- oder Gegensystemkomponente auftritt, der größer als das eingestellte Totband ist. Die Höhe des Spannungssprungs des Mit- und Gegensystems entspricht der Differenz zwischen der Vorfehlerspannung und der Ist-Spannung basierend auf der Referenzspannung. Die Vorfehlerspannung wird als Mittelwert über 50 Perioden berechnet.

$$\Delta u = \frac{U - U50per}{Uref}$$

Fig. 62: Formula n° 1

Die Anpassung des Blindstroms erfolgt mit einer Anschwingzeit von <20 ms und einer Einschwingzeit von <60 ms nach Eintritt des Ereignisses. Mit der gleichen Dynamik wird während des Ereignisses auf Spannungsänderungen oder bei Ereignissende auf die Spannungswiederkehr reagiert.

Der eingespeiste dynamische Blindstrom berechnet sich für das Mit- und Gegensystem gemäß folgender Formel:

$$I_b = \Delta u * k * I_{max}$$

Fig. 63: Formula n° 2, depending from the nominal current IN of the inverter

Δu berechnet sich für Mit- und Gegensystem jeweils aus der Differenz der Vorfehlerspannung und der aktuellen Spannung bezogen auf die Referenzspannung. Die Vorfehlerspannung wird als 1-Min.-Mittelwert berechnet.

$$\Delta u = \frac{U - U1min}{Uref}$$

Fig. 64: Formula n° 3

Die Definition eines Spannungssprungs in Vornorm EN 50549-2 sowie in VDE-AR-N 4120 und VDE-AR-N 4110 hat zur Folge, dass in der Regel bei Ereignissende, Fehlerklärung und Rückkehr der Spannung in den fehlerfreien Zustand erneut ein Spannungssprung erkannt wird. Dies führt dazu, dass in einem aktiven Betriebsmodus die dynamische Netzstützung durch schnelle Fehlerstromeinspeisung auch nach Ereignissende aktiv bleibt und Blindstrom nach Formel (2) und (3) eingespeist wird. Die dynamische Netzstützung durch schnelle Fehlerstromeinspeisung wird dann nach der konfigurierten minimalen Support-Zeit, in der Regel 5 s, deaktiviert.

$$I_b = (\Delta u_1 - tb) * k * I_N$$

Fig. 65: Formula n° 4

10.3.3 Extract from FRT menu

Country-spec. Settings	Menu level	Display/ Setting	Action in this menu/meaning
	1 2 3 4	FRT (Fault Ride Through)	**NOTE: The device supports dynamic grid stabilization (Fault Ride-Through). More detailed information at** [See section 10.3 Page 80]

EN-US

Country-spec. Settings	Menu level	Display/ Setting	Action in this menu/meaning
		☑☰ Operating mode – On | Off Setting | Manual |Predefined zero current	**Setting: Manual** All parameters can be configured independently. **Setting: Predefined zero current** Dynamic grid support active on account of immunity to interference and zero current feed-in. During a voltage incident, the current in the inverter is reduced to zero. All parameters are pre-configured, only the activation threshold for zero current has to be configured.
		Priority – Reactive current limitation | Active current priority	**Priority: Reactive current priority** Dynamic grid support active on account of immunity to interference and fast feeding of residual current. The inverter feeds additional reactive current according to the formulas (2) and (4). **Priority: Effective current priority** Dynamic grid support active on account of immunity to interference and fast feeding with active current priority. The inverter feeds in as much active power as available. If, as a result of this, the maximum continuous current is not achieved, the inverter supplies additional reactive current according to the formulas (2) and (4) up to the limit of continuous current.
		Zero current undervoltage threshold Zero current threshold over voltage ⚙ 0 – 80 [% Unom] / ◦ 10 [% Unom] / ◠ 0.1 ⚙ 108 – 129 [% Unom] / ◦ 125 [% Unom] / ◠ 0.1	If one or more phase/phase or phase/neutral conductor voltages move above the configured threshold, the inverter changes to zero current mode. The total current is regulated to virtually zero.
		Reference voltage ⚙ 80 – 110 [% Unom] / ◦ 100 [% Unom] / ◠ 0.1 [Unom]	Nominal value of the phase/neutral conductor voltage used as a reference voltage for formula (1) and (3). Adjustable in the range from level 1 undervoltage protection to level 1 overvoltage protection.
		Constant k negative sequence dip Constant k negative sequence swell ⚙ k 0 – 10 / ◦ 2 / ◠ 0.1	Amplification factor for the negative sequence used in the calculation of the reactive current using formulas (2) and (4). Can be configured independently for drops and spikes.
		Constant k positive sequence dip & Constant k positive sequence swell ⚙ k 0 – 10 / ◦ 2 / ◠ 0.1	Amplification factor for the negative sequence used in the calculation of the reactive current using formulas (2) and (4). Can be configured independently for drops and spikes.
		Dead band ⚙ 2 – 120 [% Uref] / ◦ 10.0 [% Uref] / ◠ 0.1	Dynamic grid support through fast feeding of residual current activated in the case of voltage events with a voltage change greater than the dead band.

EN-US

Country-spec. Settings	Menu level	Display/ Setting	Action in this menu/meaning
		Dynamic reactive current only ☑☰Off | On	**Standard**: The reactive current according to the formulas (2) and (4) is fed in as an **additional** reactive current. The means that sum of the prefault and additional reactive current is fed in. **Only dynamic:** The reactive current according to the formulas (2) and (4) is fed in as absolute reactive current. This means that regardless of the reactive current before the voltage event, only the reactive current according to the formulas (2) and (4) is fed in during the voltage event.
		Dead band mode Mode 1 | Mode 2	**Mode 1**: When calculating the reactive current, the value of the dead band is not subtracted from the amount of voltage change. As such, formula (2) applies to overvoltage and undervoltage incidents. **Mode 2:** When calculating the reactive current, the value of the dead band is subtracted from the amount of voltage change. For overvoltage and undervoltage events, formula (4) therefore applies: $I_b=(\Delta u_1-tb)*k*I_N$
		Reference voltage 80 – 110.0 [% Unom] / ⊙ 100 [% Unom] / ⏠ 0.1 & Minimum operating voltage activation 45 – 125.0 [% Unom] / ⊙ 80 [% Unom] / ⏠ 0.1 & Maximum operating voltage activation 45 – 125.0 [% Unom] ⊙ 80 [% Unom] / ⏠ 0.1	Dynamic grid support via fast feeding of residual current is activated on voltage events with at least one phase/phase or phase/neutral conductor voltage outside the configured normal operating voltage range. Dynamic grid support via fast feeding of residual current is deactivated when the voltage returns to the reference operating voltage range.
		Reactive current limitation ⚙ 0 – 100 [% Imax] / ⊙ 100 [% Imax] / ⏠ 1	The reactive power component of the fast feeding of residual current is limited to permit a defined proportion of active power components.
		Minimum support time ⚙ 1000 – 15000 [ms] / ⊙ 5000 [ms] / ⏠ 10	If due to a voltage jump in accordance with formula (1) and the configured dead band is activated, the dynamic grid support is deactivated via fast feeding of residual current after the minimum support time elapses.

10.4 Other grid support functions effective on active power

10.4.1 Permanent power gradient limitation

The maximum active and apparent power to be installed for a generation plant is agreed between the grid operator and plant operator. The device capacity of a plant can be set to the exact agreed value using the S_{lim} and P_{lim} settings. To ensure that the load on the devices in the plant is uniform, we recommend distributing the performance reduction evenly across all devices.

Some grid connection rules insist that the agreed reactive power be supplied from every operating point of the plant without a reduction in the actual active power. Considering the fact that all KACO TL3 inverters have a semi-circular(PV) full-circular(BI) P-Q operating range, a reduction in the active power is, however, required during operation at maximum active power because an apparent power reserve is not available. By adjusting P_{lim} the maximum active power can be restricted in order to establish an apparent power reserve and ensure that the agreed reactive power can be delivered from any active power operating point. The graphic Inverter shows the appropriate P-Q operating range with a required example active power of 48% of the maximum apparent power of the plant or 43% of the maximum active power of the plant.

EN-US

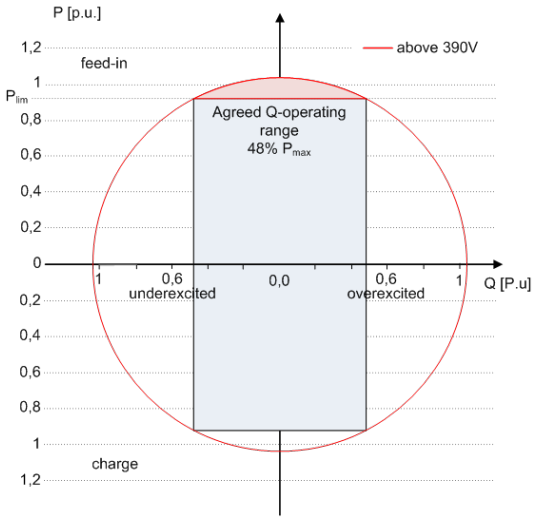

Fig. 66: P-Q operating range with limited active power (Qmax=Smax≠Pmax) for Storage inverters

The power reduction parameters can be adjusted in SunSpec model DID123. During this process, you should also check whether internal and/or external power reduction is active.

Internal power limitation	Parameters for external power limitation	Parameters for power limitation
Status = active	Status = active	Parameters in SunSpec Model 123:
Maximum apparent power S_{lim}=**92000 VA**		„WMaxLimPct" = 50% P_{lim} (**ca. 36800 W**)
Maximum active power P_{lim}= **80% (ca. 73600 W)**	AC fallback active power Pfb = **75%** P_{lim} **(ca. 55200 W)**	„WMaxLimPct_RvrtTms" = **60s** "WMaxLimPct_RmpTms" = **2s**
	PT1 Settling time = 1s	"WMaxLim_Ena" = **1**

Tab. 6: Sample parameters for power limitation

If the ramp time "WMaxLimPct_RvrtTms" in the SunSpec model is specified as 0 s, then the internal output gradient is used. Otherwise, the set value will be used.

Irrespective of the communication protocol used, the settling time "WMaxLim_Ena" is used in order to transfer the new power value. Otherwise, the internally configured value will be used.

The additional ramp time "WMaxLimPct_RmpTms" specifies the jump time from a power value to the new power value.

The following formulae are used to calculate the gradient $S_{lim/min}$:

$$\text{GradientWattPerMin} = \frac{\left(\frac{WMaxLimPct}{100} \times Plim - Pactual\right)}{WMaxLimPct_{RmpTms}} \times 60 \times \frac{100}{Slim}$$

$$\text{GradientWattPerMin} = \frac{\left(\frac{50\%}{100} \times 36800\,W - 55200\,W\right)}{2\,s} \times 60 \times \frac{100}{92000\,VA}$$

$$\mathbf{GradientWattPerMin = -600\,\%\,Slim\,/min}$$

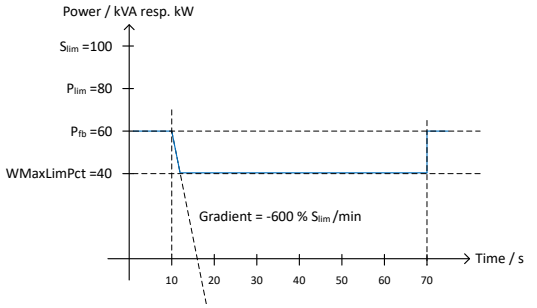

Fig. 67: Power gradient according to sample parameters and calculation

The following formulae are used to calculate the Q filter parameter and cos ϕ gradient:

$$\text{GradientVArPerMin} = \frac{\left(\frac{VArMaxPct}{100} \times Slim - Qactual\right)}{VArPct\_RmpTms} \times 60 \times \frac{100}{Slim}$$

Fig. 68: Formula for calculating the Q filter parameter

$$\text{GradientVArPerMin} = \frac{\left(\frac{VArMaxPct}{100} \times Slim - Qactual\right)}{OutPFSet\_RmpTms} \times 60 \times \frac{100}{Slim}$$

Fig. 69: Formula for calculating the cos ϕ gradient (internal power gradient)

10.4.1.1 Parameters for permanent power limitation

Country-spec. Settings	Menu level	Display/ Setting	Action in this menu/meaning
		Power limitation ☑ Check activation	Activate or disable the power limitation.
		Maximum apparent power (S_{lim}) 1000 – S_{max} [VA]	The apparent power is limited globally to the configured value in VA. As soon as S_{lim} has been configured, all of the active and reactive power control values will use S_{lim} as 100% instead of S_{max}.
		Maximum active power (P_{lim}) 1 – 100 [% S_{lim}]	Active power is limited globally to the configured value in % S_{lim}.

10.4.2 Soft start up / power ramp-up limiting

A soft start-up function is available to prevent the grid from being negatively impacted by a sudden increase in feed-in power from the inverters.

When the inverter is activated or switched on, the increase in power is restricted by the set gradient. It is possible to configure whether the soft start-up should occur every time the device is switched on, only upon initial start-up each day or only upon start-up after the device has been switched off by grid protection. Due primarily to the fact that there is the risk that many plants could increase their power levels simultaneously after they have been switched off by grid protection, a soft start-up is usually only required for start-up after a device has been switched off by grid protection.

The soft start up is implemented by an absolute power limitation that increases with a continuous gradient up to the maximum power. The actual power of the inverter may vary freely below this limit due to a possible fluctuation in the available power or the target value, but at no time increases above the absolute power limit.

10.5 Advanced islanding detection

Due to decentralized generation, there is the possibility that a deactivated part of the grid will remain live in an unintended island due to the balance of load and generation in this part of the grid. The detection of unintended island formation is an important function of decentralized generating units and is related to the prevention of damage to equipment as well as safety of personnel.

Depending on the structure and the operation of the distribution grid several dangers exist:

- In case of maintenance work in a distribution grid, personnel may be placed in danger if the deactivated part of the grid remains live as an island. This is especially the case if not all safety rules are followed.
- If fast auto-reclosure is used in a distribution grid and the deactivated part of the grid remains live as an island, reclosure will likely happen during phase displacement which might cause damage to rotating machinery on the grid.
- In the event of a fault in a medium voltage grid, the faulty part of the grid is disconnected. If the fault has a significant resistance, the deactivated part of a medium-voltage grid remains live as an island. Depending on the type of fault, but explicitly in case of a fault in the transformer, dangerous medium voltage might be accessible or even present in low-voltage appliances.

Especially for the last example very fast disconnection of the generating units to cause collapse of the forming island is necessary. At the same time any island formation detection method may cause false tripping. The industry is therefore in constant research to develop methods that are fast and reliable and at the same time reliably prevent false tripping.

EN-US

Enhanced island detection method

KACO new energy's advanced islanding detection, uses a strategy to reliably detect islanding formation that is based on the characteristic differences between an interconnected grid and an islanded grid, thus ensuring reliable fast detection and prevention of false tripping.

An interconnected grid is dominated by rotating machinery, as a consequence frequency is proportional to active power balance and voltage is proportional to reactive power balance. In contrast an islanded grid behaves like a resonant circuit, as a consequence frequency is proportional to reactive power balance and voltage is proportional to active power balance. The active enhanced island detection method detects this difference by monitoring the behaviour of the grid. The enhanced island detection is monitoring the natural fluctuation of the grid frequency and injects a minimal reactive power proportional to the rate of change of frequency. In the moment an island is formed, the connected power grid closes a positive feedback loop which allows the inverter to detect the changed situation and to disconnect. In case of formation of an island, the inverter disconnects within some 100 ms, well below 1000 ms.

- The number of parallel inverters does not affect the reliability of this function.
- This method also guarantees the minimisation of effects on the distribution grid.
- In normal operation no effects on harmonic content, flicker and grid stability are detected.

This detection method is combined with a two stage passive rate of change of frequency (ROCOF) observation.If the ROCOF of the grid exceeds the configured disconnection threshold of stage 1 for the configured disconnection time, the device switches to zero current mode. If the ROCOF of the grid exceeds the configured disconnection threshold of stage 2 for the configured disconnection time, the device switches off. In case of an island, this will shut down the island instantaneously. If the grid stabilizes, what might be the case if the ROCOF event was due to a short disturbance in the power grid, the inverter will resume normal operation. With stage 1 active, the device has switched to zero current mode and will recommence feed-in after only 100 ms. With stage 2 active, the device has switched off and the set reconnection conditions shall apply.

EN-US

11 Maintenance and troubleshooting

11.1 Visual inspection

Inspect the product and cables for visible external damage and note the operating status display, where applicable. In the event of damage, notify your installation engineer. Repairs may only be carried out by authorised electricians.



⚠ DANGER

Dangerous voltage due to two operating voltages

Severe injuries or death may occur if the cables and/or terminals/busbars in the device are touched. The discharge time of the capacitors is up to 5 minutes.



1. Only appropriately qualified electricians authorized by the mains supply network operator are permitted to open and maintain the device.
2. Before opening the device: Disconnect the AC and DC side and wait at least 5 minutes.



NOTE

There are components within the housing that may only be repaired by our customer service team.

1. Do not attempt to rectify faults that are described here (in the troubleshooting chapter). Contact our Customer Service department. Only carry out maintenance activities that are described here.
2. Log each maintenance activity in the "Service" menu item: "Service Log" (exception: "user" interface) [See section 9.4.2 Page 42]
3. The device should be checked for proper operation by a qualified electrician at regular intervals and if you experience problems, you should always contact the system manufacturer's Service department.

11.2 Cleaning

11.2.1 Cleaning the housing

⚠ CAUTION

Risk of damage to the device during cleaning!

1. Do not use compressed air or high-pressure cleaners.
2. Use a vacuum cleaner or a soft brush to remove dust from the fan cover and from the top of the device on a regular basis.
3. Remove dust from the ventilation inlets if necessary.

11.2.2 Cleaning the heat sink



NOTE

Refer to our service and guarantee conditions on our homepage.

✓ The cleaning intervals must be adapted to match the ambient conditions of the installation location.

1. In sandy environments, we recommend cleaning the heat sinks and fans every quarter.

EN-US

↻ Cleaning the heat sink requires the fan to be removed.
↻ Switch off the device and secure it against restart.
↻ Keep a suitable brush ready for cleaning.

1. Remove the hood and fan [See section 11.3 Page 88].
2. Clean the free space between the cover and the heat sink using suitable brushes.
3. Clean the heat sink with a suitable brush.

. **NOTE: Do not use any aggressive cleaning agents and ensure that no other components come into contact with fluids.**

⇨ Cleaning completed – if necessary, remount the fans.

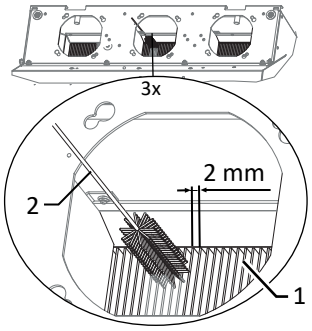

Fig. 70: Cleaning the cooling fins from above

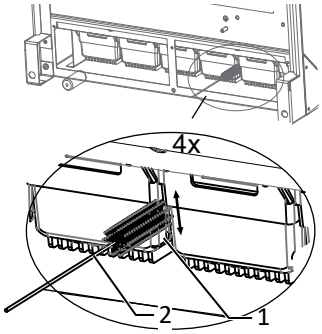

Fig. 71: Cleaning the cooling fins from below

1	Heat sinks / space between heat sinks
2	Brush (max. wire diameter 2mm)

11.3 Replacing the fans

Removing the cover

↻ It has been ensured that there is no AC/DC voltage present

1. Remove the fastening screws on the cover from both sides [🛠_T20]
2. Lift up the cover from both sides and press it out of the mounting clips.
3. Set the cover to one side.

⇨ Proceed with the cleaning or removal of the fans.

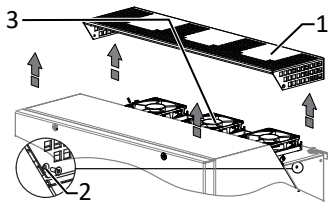

Fig. 72: Removing the cover

1	Cover
2	Fastening screw
3	Mounting clips
4	Fans

EN-US

Dismounting the fan

- ↻ Replace fan time requirement: (10 min each fan) 30 min
- ↻ It has been ensured that there is no AC/DC voltage present.
- ↻ **DANGER! Risk of injury from starting fans: If the device is not completely disconnected from the voltage source, the fan may start up unexpectedly and sever or injure limbs. This may also cause damage to the fan and impair the functionality of the device.**
- ↻ Cover hood for fans removed.

1. Wait until the 3 fans have stopped rotating.
2. Rotate the defective fan through approx. 10° in the clockwise direction and remove it carefully using the collar.
3. Release the interlock and remove the connector plug from the inside of the housing.
4. Remove the fan.
5. If necessary, clean the heat sink from above.

⇨ Install the replacement fan.

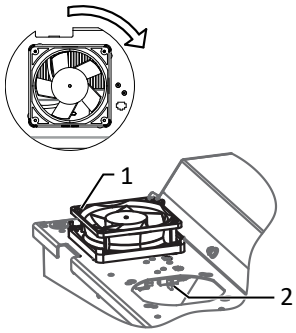

Fig. 73: Removing the fans

1 Fans
2 Connector

Installing the fans

↻ You have removed the defective fan.

1. Plug in the connector plug of the new fan at the connection socket provided within the housing and check the interlock.
2. Insert the replacement fan into the collar holder.
3. Turn the fan approx. 10° anticlockwise.
4. If necessary, replace another fan.

⇨ Fit the cover back in place.

Removing the interior fan

- ↻ Ensure that the device is completely free of AC/DC voltage.
- ↻ **DANGER! Risk of injury from starting fans: If the device is not completely disconnected from the voltage source, the fan may start up unexpectedly and sever or injure limbs. This may also cause damage to the fan and impair the functionality of the device.**
- ↻ Remove the housing cover. [See section 7.1 Page 22]

1. Wait until the interior fan is no longer turning.
2. Loosen the fastening screw from the circuit board.
3. Move the interior fan to the front area.
4. Unlock the power supply to the connector.
5. Detach the fan grille from the housing.
6. Remove dust and dirt particles from the housing.

⇨ Install the replacement fan.

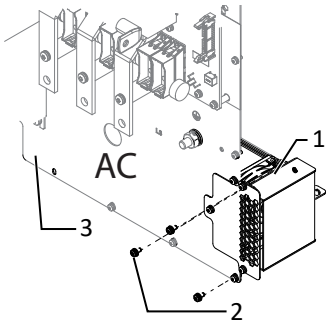

Fig. 74: Removing the interior fan

1 Interior fan
2 Mounting
3 Board

Fitting the interior fan

NOTE: If an internal fan fails, an error message is displayed and the device limits its power to max. 50% of the max. possible power, in contrast to external fans.

↻ You have removed the interior fan.

1. Slide the collar with the fan lengthways off the housing and lift it out.
2. Carefully pull the connected fan off the collar.
3. Press the replacement fan into the collar holder.
4. Plug the connector plug of the interior fan into the connection socket provided and check that it is locked.
5. Insert the collar with the fan into the housing and check that it is firmly seated.
6. Mount the fan grille on the housing.
7. Mount the ventilating plate on the board.

⇨ Interior fan successfully replaced.

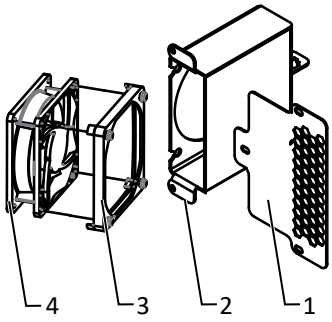

Fig. 75: Disconnecting the interior fan

1 Fan grille
2 Housing
3 Collar
4 Fan

EN-US

Fitting the cover

↻ The fan has been correctly installed and all impurities in the area of the cover have been removed.

1. Lift up the cover from both sides, place it on the mounting clips and carefully press it in.
2. Insert the fastening screws into the cover on both sides and tighten them [_T20 / 17.70 In-lbs].

⇨ You may now start up the device [See section 8 Page 31].

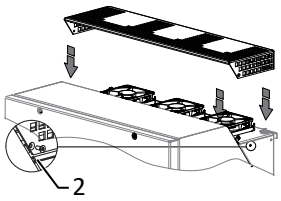

Fig. 76: Fitting the cover

2 Fastening screw

11.4 Shutting down for maintenance / troubleshooting

NOTE: Shutdown sequence

1. If possible, shut down the device via EMS.
2. Switch off the grid voltage by turning off the external circuit breakers.
3. Enable the DC side via the external DC switch.

⇨ After shutdown, wait 5 minutes before opening the device.

11.5 Replace DC fuse

↻ Ensure there is no DC voltage present.

. **NOTE: Do not damage or remove the side insulator fastening!**

1. Loosen and remove the DC fuse (F1) on the upper and lower lock nuts by holding the support bolt against it [W35] against it [W17].
2. Insert the new specified DC fuse in the intended position and fasten it with the lock nuts by holding the support bolt [W35] against it [W17 / 44.25 In-lbs].
3. DC fuse replaced. Continue connecting the battery.

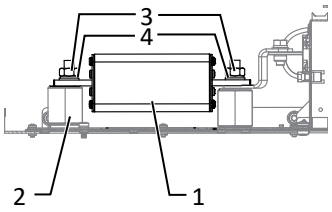

Fig. 77: Replace DC fuse

11.6 Faults

11.6.1 Procedure

⚠ DANGER

Lethal voltages are still present in the connections and cables of the device even after the device has been switched off and disconnected!

Severe injuries or death may occur if the cables and/or terminals/busbars in the device are touched.

1. If a fault occurs, notify an appropriately authorized and qualified electrician or KACO new energy GmbH Service.
2. The operator can only carry out actions marked with a B.

11.6.2 Rectifying faults

B = Action of the operator; E = The indicated work may only be carried out by an authorized electrician! ; K = The indicated work may only be carried out by a service employee of KACO new energy GmbH!

Fault	Possible cause	Explanation/remedy	By
The LEDs do not light up	Grid voltage not available	› Check whether the DC and AC voltages are within the permitted limits (see Technical Data)	E
		› Notify KACO Service.	E

EN-US

Fault	Possible cause	Explanation/remedy	By
The device stops feeding into the grid shortly after being switched on, even though there is sunlight present.	Defective circuit-breakers in the device	If the circuit-breakers are defective, the device will recognize this during the self-test.	K
		› Ensure that there is sufficient PV generator power.	E
		› If the grid separation relay is defective, have it replaced by KACO Service.	
		› Notify KACO Service.	
Device is active but not connected to the grid. A grid fault is displayed on the status LED.	Grid-feed is interrupted due to a grid fault.	Due to a grid fault (over/undervoltage, over/underfrequency), the device stopped the feed-in process and disconnected from the grid for safety reasons.	
		› Change the grid parameters within the permitted operating limits (see the "Start-Up" section).	E
The grid fuse trips.	The grid fuse capacity is too low.	In case of a high level of solar radiation, the inverter exceeds its rated current for a short period, depending on the PV generator.	
		› Select the capacity of the device's pre-fuse to be somewhat higher than the maximum feed-in current (see the "Installation" section).	E
		› Contact the grid operator if the grid failure continues to occur.	E
The grid fuse trips.	Damage to the device's hardware.	If the grid fuse trips immediately when the device goes into feed-in mode (after the start-up period is complete), the device's hardware is probably damaged.	
		› Contact KACO Service to test the hardware.	E
The device is displaying an impossible daily peak value.	Faults in the grid.	The device continues to operate as normal without losses to the yield, even when an erroneous daily peak value is displayed. The value is reset overnight.	
		› To reset the value immediately, switch the device off by disconnecting it from the grid and switching off the DC, then switch it back on.	E
Daily yields do not correspond to the yields on the feed-in meter.	Tolerances of the measuring elements in the device.	The measuring elements of the device have been selected to ensure maximum yields. Due to these tolerances, the daily yields shown may deviate from the values on the feed-in meter by up to 15%.	E
		› No action.	
Device is active but not connected to the grid.	Generator voltage too low; grid voltage or PV generator voltage unstable.	The PV generator voltage or power is not sufficient for feed-in (solar radiation is too low). The inverter checks the grid parameters before the feed-in process begins. The length of time it takes to switch back on again differs from country to country, depending on applicable standards and regulations, and may be several minutes. The starting voltage may have been set incorrectly.	
		› Adjust starting voltage in the Parameters menu if required.	E
		› No action	

EN-US

Fault	Possible cause	Explanation/remedy	By
Even with high radiation levels, the device does not feed the maximum power into the grid.	Particular ambient conditions.	Because the temperatures inside the device are too high, the device reduces its power to prevent damage to the device. Note the technical data. Ensure that the convection cooling is not impeded from the exterior. Do not cover the cooling fins.	
		› Ensure sufficient cooling of the device.	B
		› Remove any foreign bodies that may be on the device.	B
		› Clean the cooling fins	E
	DC fuse defective	A generator string is disconnected from the device due to a defective fuse. Establish the cause of tripping by measuring all DC strings with a clip-on ammeter. - If there is no current flowing in a string, then the associated DC fuse is defective.	
		Check the no-load voltage and layout of the PV generator. Replace the damaged modules if necessary.	B, E
		› Replace the PV fuse with a fuse size that is of the same type.	

Tab. 7: Troubleshooting

11.7 Fault messages

Many event messages indicate a fault in the grid. They are not operational faults of the device. The triggering levels are defined in standards, e.g. VDE0126-1-1. The device shuts down if the values exceed or fall below the approved levels.

Fault LED (red)	Status	Explanation	LED
rx	FS (fault status)	– The fault relay has switched.	On
		– Feed-in was ended due to a fault.	
	OS (operating status)	– The fault relay releases again.	Off
		– The device feeds back into the grid again after a country-specific time period.	

NOTE

Status & Fault messages

The overview of all existing status & fault messages, can be found in the associated integration manual, which you can obtain from KACO sales team (pv-projects.kaco.de@siemens.com).

EN-US

12 Decommissioning and removal

12.1 Switching off the device



⚠ WARNING

Risk of burns from hot housing components

Housing components could heat up during operation.

1. Only touch the housing cover of the device during operation.

1. Switch off the device on the external DC isolator switch.
2. Use a clip-on ammeter to check that there is no AC and DC voltage present.

⇨ Ensure that the device is completely free of voltage.

⇨ Device can be uninstalled.

12.2 Disconnecting the connections

12.2.1 AC connection

↻ It has been ensured that there is no AC/DC voltage present.
↻ Remove the housing cover and put it aside.

1. Detach cables (L1/L2/L3) from the AC connection terminal [🔧W_17].
2. Detach the PE line from the earthing bolt [🔧W_17].
3. Unfasten the cable fitting and remove the cables through the cable fitting [🔧W_46].

. **NOTE: If the AC cable does not fit through the cable fitting due to the size of the cable lug, then the AC cable must be severed at the cable lug.**

4. Place protective caps on the ends of the AC cables.

12.2.2 DC connection

↻ It has been ensured that there is no AC/DC voltage present.

1. Detach the DC cables onthe DC+ and DC- terminals [🔧W_17 (M, L, XL)]
2. Unfasten the cable fitting and pull the DC line through the cable fitting [🔧W_46]

12.3 Uninstalling the device



⚠ DANGER

Dangerous voltage due to two operating voltages

Severe injuries or death may occur if the cables and/or terminals/busbars in the device are touched. The discharge time of the capacitors is up to 5 minutes.



1. Only appropriately qualified electricians authorized by the mains supply network operator are permitted to open and maintain the device.
2. Before opening the device: Disconnect the AC and DC side and wait at least 5 minutes.

↻ The device is switched off and a check has been performed to ensure that it is de-energized.
↻ AC cable disconnected [See section 12.2.1 Page 93].
↻ DC connection disconnected [See section 12.2.2 Page 93].

1. Undo the cable fittings for Ethernet cables [🔧W_29].
2. Unfasten the cable bolts for RS485 cables [🔧W_20].
3. Disconnect the plug from the communication circuit board.
4. Pull the interface cables out of the device.
5. Insert sealing plugs into all open cable fittings.

⇨ The device has been uninstalled. Proceed with removal.

12.4 Removing the device

↻ Device has been switched off and uninstalled.

1. Remove the screw that prevents the device from being lifted off the mount.
2. Use the lateral openings and lift the device off the mount.

EN-US

⇨ The device has been removed. Proceed with packaging.

12.5 Packaging the device

↻ The device has been uninstalled.

1. If possible, always pack the device in the original packaging. If this is no longer available, an alternative is to use equivalent packaging.
2. You must be able to close the box completely and it must be able to accommodate the weight and size of the device.

12.6 Storing the device

NOTE

Damage to property due to condensation build-up

If the device is stored incorrectly, condensation may build up within the device and impair the functionality of the device (e.g. due to storage that does not conform to the specified environmental conditions or if the device is transported from a cold environment to a warm environment for a brief period of time.

1. Check the interior space for any condensation water prior to electrical installation and, if necessary, allow it to dry out sufficiently.
2. Storage in accordance with the technical data > Environmental data

↻ The device is packaged.

☞ Store the device in a dry place, in accordance with the ambient temperature range Environmental data.

EN-US

13 Disposal

EN-US

14 Service

Contact the service portal: https://sieops.my.site.com/SI/s/createcase to solve a technical problem with this device.

Please have the following information ready so that we can help you quickly and efficiently:

- Device name / serial number
- Date of installation / Start-up report
- Fault message indicated by status LEDs / Description of the fault / Did you notice anything unusual? / What has already been done to analyze the fault?
- Consignment identification / Delivery address / Contact person (with telephone number)
- Information about the accessibility of the installation site

EN-US

15 Appendix

3015394-07-251010

The text and figures reflect the current technical state at the time of printing. Subject to technical changes. No liability for printing errors.

KACO new energy.

Werner-von-Siemens-Allee 1 · 74172 Neckarsulm · Germany · Tel. +49 7132 896-0 · info@kaco-newenergy.de · www.kaco-newenergy.de