# Table of Contents

**Table of Contents** ..... 1

**1 About this manual** ..... 3

**1.1 Validity** ..... 3

**1.2 Target group** ..... 3

**1.3 Retention of the manuals** ..... 3

**1.4 CE marking** ..... 3

**2 Safety instructions and regulations** ..... 4

**2.1 Technical rules** ..... 4

**2.2 Accident prevention regulations** ..... 4

**3 Unpacking** ..... 5

**3.1 Scope of delivery** ..... 5

**3.2 Check for transport damage** ..... 5

**4 Technical data** ..... 6

**4.1 DC input data** ..... 6

**4.2 Output data** ..... 6

**4.3 Efficiency and safety equipment** ..... 7

**4.4 General data** ..... 7

**5 Installation and startup** ..... 8

**5.1 Selecting an appropriate place for installation** ..... 8

5.1.1 Dimensions and weight ..... 8

5.1.2 Ambient conditions ..... 9

5.1.3 Position ..... 10

**5.2 Installing the inverter ..... 10**

**5.3 Electrical connection ..... 13**

5.3.1 Connection to the public grid (AC) ..... 14

5.3.2 Connection to the PV generator (DC) ..... 20

**5.4 Startup ..... 23**

**5.5 Communication ..... 23**

5.5.1 Communication through RS232 ..... 23

5.5.2 Communication through RS485 ..... 25

**5.6 Safety protection ..... 28**

5.6.1 Grid voltage and frequency protection ..... 28

5.6.2 Over temperature monitoring ..... 28

5.6.3 Ground fault current interruption (GFCI) ..... 29

5.6.4 Isolation fault detection ..... 29

5.6.5 Earthing fault monitoring ..... 29

5.6.6 Active anti-islanding protection ..... 29

5.6.7 DC current injection monitoring ..... 29

5.6.8 DC reverse polarity protection ..... 29

**6 Contact ..... 30**

# 1 About this manual

## 1.1 Validity

This installation instructions describes the installation and startup of Eversolar New Energy inverters of the type Eversol-TL2100, Eversol-TL3200, Eversol-TL4600, Eversol-TL5400.

## 1.2 Target group

Only an authorized skilled electrician who is approved by the supply grid operator may install and startup the inverter. This documentation contains important information regarding installation of the system. Be sure to read this manual carefully before installing.

## 1.3 Retention of the manuals

All documents for the Eversol and the installed components must be kept with the system and available at all times.

## 1.4 CE marking

| Type | Normative reference |
|---|---|
| Eversol-TL2100/3200 | EN50178, EN61000-6-1, EN61000-6-3, EN61000-6-2, EN61000-6-4, EN61000-3-2, EN61000-3-3 |
| Eversol-TL4600/5400 | EN50178, EN61000-6-1, EN61000-6-3, EN61000-6-2, EN61000-6-4, EN61000-3-12, EN61000-3-11 |

# 2 Safety instructions and regulations

## 2.1 Technical rules

Installation must be suited to the on-site conditions and comply with local regulations and technical rules.

## 2.2 Accident prevention regulations

1. Only skilled electricians who have read and fully understood all safety information contained in these operating and installation instructions, may install the inverter.
2. The Eversol may only be operated with PV generators. Do not connect any other source of energy to the Eversol.
3. All covers on the unit must remain closed during operation and all screws must be tightened.
4. Be sure that the PV generator and inverter connect to the ground in order to protect property and persons.
5. Before opening the cabinet, the solar inverter must be disconnected from the grid and PV generator. You must wait at least five minutes in order that the energy storage capacitors are fully discharged during this period after disconnecting the inverter from the grid and PV generator.

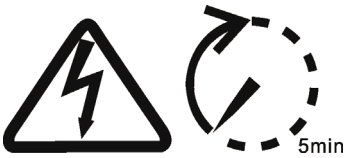

# 3 Unpacking

## 3.1 Scope of delivery

| Object | Description | Quantity |
|---|---|---|
| A | Eversol inverter | 1 pcs |
| B | Ornamental plate | 1 pcs |
| C | MC IV-connectors including male connector and female connector | 2 pairs (for TL4600 and TL5400)<br>1 pair (for TL2100 and TL3200) |
| D | AC connector | 1 pcs |
| E | Installation and operating instructions | 2 pcs |

Please check all of the components carefully in the box. If something missing, contact your dealer at once.

## 3.2 Check for transport damage

Thoroughly inspect the inverter upon delivery, if you discover any damage to the packaging which indicates that the inverter may be damaged, inform the responsible transport company immediately. We will be glad to assist you if required.

# 4 Technical data

## 4.1 DC input data

| Type | TL 2100 | TL 3200 | TL 4600 | TL 5400 |
|---|---|---|---|---|
| Max. PV-generator power [W] | 2100 | 3200 | 4600 | 5400 |
| Max. DC Voltage [V] | 580 | 580 | 680 | 680 |
| MPPT voltage range [V] | 125 - 530 | 125 - 530 | 125 - 550 | 125 - 550 |
| Turn off DC Voltage [V] | 125 | 125 | 125 | 125 |
| Max. DC current [A] | 18 | 20 | 20 | 25 |
| Nominal DC current [A] | 16.2 | 18 | 18 | 22.5 |
| Number of DC connection | 1 | 1 | 2 | 2 |
| Number of MPP trackers | 1 | 1 | 1 | 2 |
| DC-connection | MC IV-connector | | | |
| Turn on power [W] | 10 | | | |

## 4.2 Output data

| Type | TL 2100 | TL 3200 | TL 4600 | TL 5400 |
|---|---|---|---|---|
| AC connector | Spring-clamp tech | | | |
| Power connection | Single phase | | | |
| Rated AC power [W] | 1800 | 2800 | 4000 | 4600 |
| Max. AC Power [W] | 1980 | 3080 | 4400 | 5060 |
| Grid voltage range | 187-264 V / 207-264 | | | |
| Grid frequency range | 47.5-50.2 Hz / 47-50.5Hz | | | |
| Rated current [A] | 7.8 | 12.2 | 17.4 | 20.0 |
| Max. current [A] | 9.9 / 9.57 | 15.4 / 14.9 | 22 / 21.3 | 25.3 / 24.4 |
| Power factor | 0.99 | 0.99 | 0.99 | 0.99 |
| Harmonic distortion (THD) at rated output | <2% | <2% | <2% | <2% |
| Power consumption at night [W] | <0.2 | <0.2 | <0.2 | <0.2 |
| Power consumption at standby [W] | 6 | 6 | 6 | 6 |

## 4.3 Efficiency and safety equipment

| Type | TL 2100 | TL 3200 | TL 4600 | TL 5400 |
|---|---|---|---|---|
| Efficiency | | | | |
| Max. efficiency | 97.1% | 97.3% | 97.5% | 97.5% |
| Euro efficiency (at 360VDC) | 96.5% | 96.5% | 97.0% | 97.0% |
| MPPT adaptation efficiency | 99.5% | 99.5% | 99.5% | 99.5% |
| Safety equipment | | | | |
| Internal overvoltage protection | Integrated | | | |
| DC Insulation monitoring | Integrated | | | |
| Earth fault protection | Integrated | | | |
| Mains monitoring | According to VDE 0126-1-1, GB, G83/1 | | | |
| Earth fault current monitoring | According to VDE 0126-1-1, GB, G83/1 | | | |
| DC current monitoring | According to VDE 0126-1-1, GB, G83/1 | | | |

## 4.4 General data

| Type | TL 2100 | TL 3200 | TL 4600 | TL 5400 |
|---|---|---|---|---|
| Housing | Aluminium housing for inside and outside installation | | | |
| Operating temperature range | -20°C to +60°C(up 40°C derating) | | | |
| Relative humidity | 0% to 98%, no condensation | | | |
| Site altitude | Up to 2000m without derating above sea level | | | |
| IP protection type | IP 65 according to IEC 60529 | | | |
| Isolation type | Transformerless | | | |
| Cooling concept | Convection | | Regulated cooling | |
| Noise level | < 40 dBA | | | |
| LED display | 3 | | | |
| LCD display | Backlight, 16×2 Character LCD | | | |
| Data logger<br>Data communication interfaces | RS232 and RS485 | | | |
| Standard warranty (option) | 5 years | | | |

# 5 Installation and startup

## 5.1 Selecting an appropriate place for installation

**Danger!**

**Danger of lethal injury due to fire or explosion!**

The Eversol may become hot in normal operation.

Do not install the Eversol on flammable construction materials and where flammable materials are stored.

Do not install the Eversol in areas where there is a risk of explosion.

**Caution!**

**Danger of burns from hot housing components!**

Install the Eversol so that it cannot be touched unintentional.

### 5.1.1 Dimensions and weight

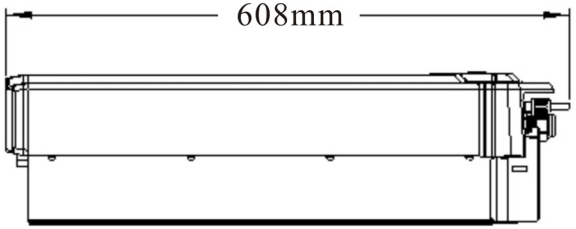


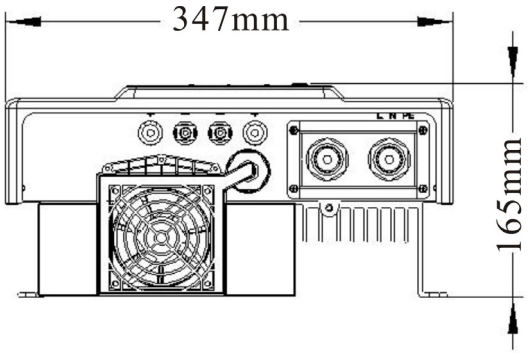

| Type | Eversol-TL2100 | Eversol-TL3200 | Eversol-TL4600 | Eversol-TL5400 |
|---|---|---|---|---|
| Weight | 19.9 kg | 20.7 kg | 21.4 kg | 23.5 kg |

## 5.1.2 Ambient conditions

1. The area where the units installed is as dry as possible in order to extend their service life.
2. Ensure good access to the unit for installation or any service work that may later be required.
3. Maintain the following minimum clearances around the unit:
4. If the wall is wooden, please add a thermal insulating layer between Eversol inverter and the wooden wall.

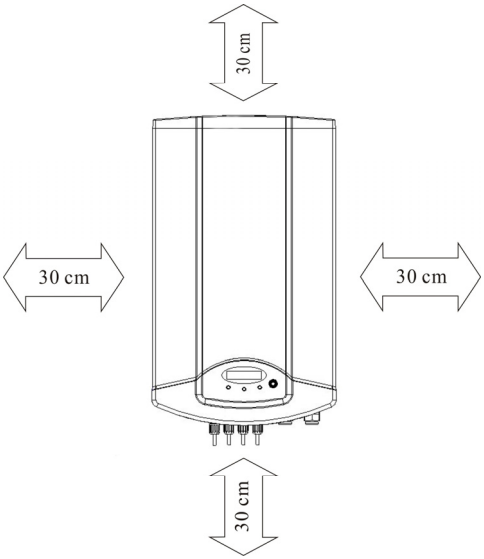


| Direction | Minimum clearance |
|---|---|
| above | 30 cm |
| below | 30 cm |
| sides | 30 cm |

5. Do not expose the Eversol to direct sunlight, in order to avoid power reduction due to excessive heating. That the ambient temperature keeps below 40 $^{o}$C will guarantee the Eversol working in optimal status.
6. Provide better ventilation for Eversol to ensure that heat is dissipated adequately.
7. Install Eversol on a solid surface. Because of the noises made by the Eversol when in operating, do not install the unit on plasterboard walls in order to avoid audible vibrations.

## 5.1.3 Position

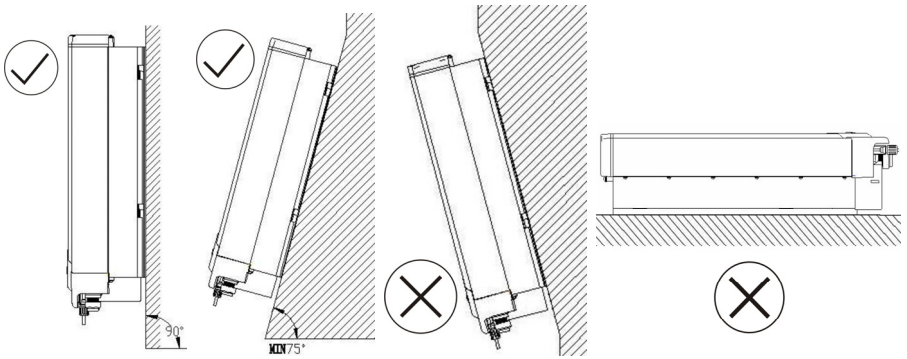


1. The unit has been designed for vertical or tilted backwards by max. 15° installation.
2. Do not install the Eversol forwards.
3. Never install it horizontally.
4. Installing at eye level makes it easier to operate and read the display.

## 5.2 Installing the inverter

**Installing procedure:**

a) **Drilling holes**

Drill four holes for the screws at the selected installation position. The space between every two holes is shown in the figure below. Keep drilling vertical to the wall, and don't shake the drill to avoid holes tilting. The depth of the holes must be the same and in the range of 55 mm ~ 60 mm. After removing the dust in the four holes, measure the net depth of the holes. If the depth is deeper than 60 mm or less than 55 mm, the expansion tubes wouldn't be installed and tightened.

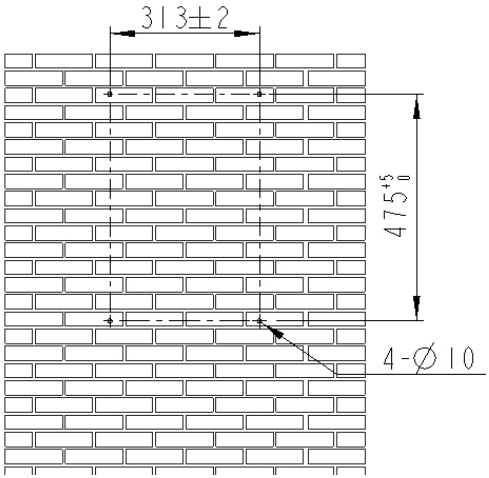


b) **Wring the screws**

After drilling holes in the wall, place four expansion tubes (object 2 shown in the left drawing below) in the holes using a rubber hammer. Then, wring two screws (object 1) into the top expansion tubes. The other two screws must wring into the two expansion tubes below with two washers.

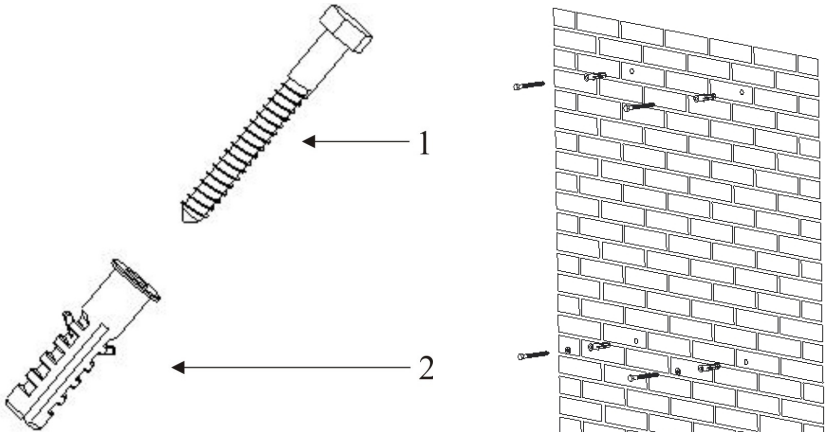


**Attention!**

Before inserting expansion tubes, measure the depth of every hole and the distance between every two holes. If the measure values do not meet the installing requirements, re-drill holes in the wall.

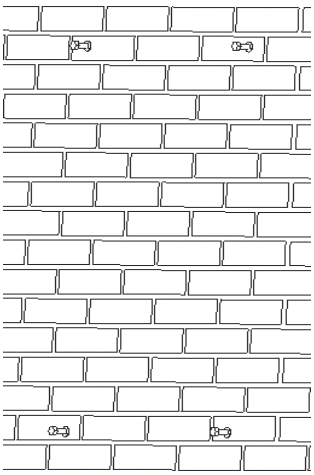



c) Attach the Eversol to the screws slightly downwards.

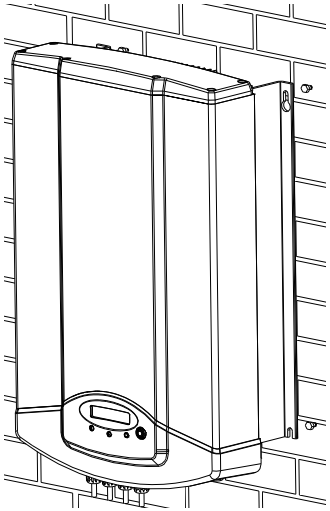

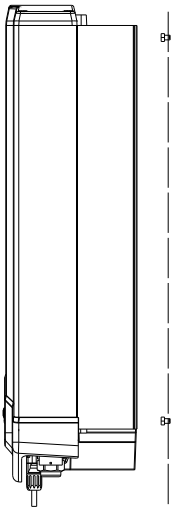

d) Check both sides for correct positioning and then tighten the four screws.

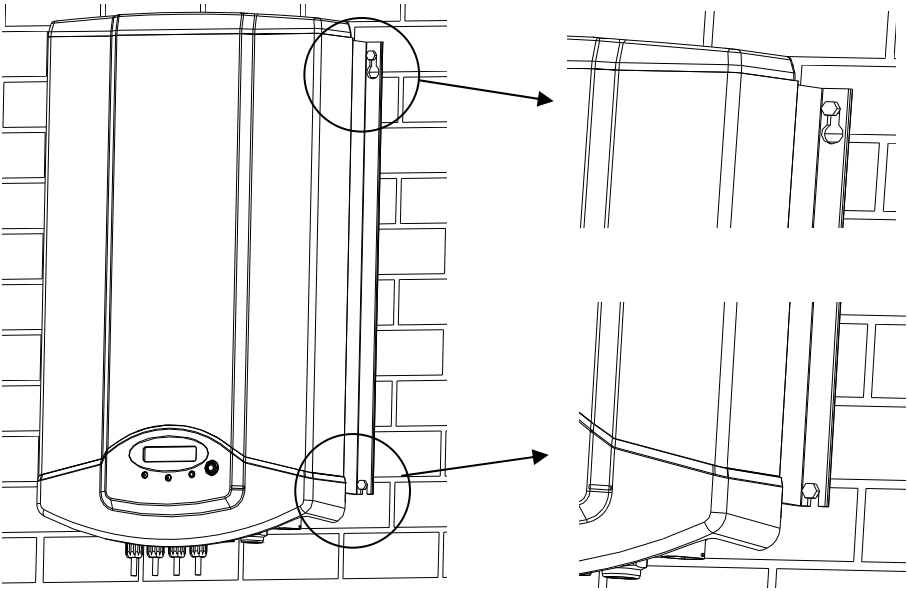

## 5.3 Electrical connection

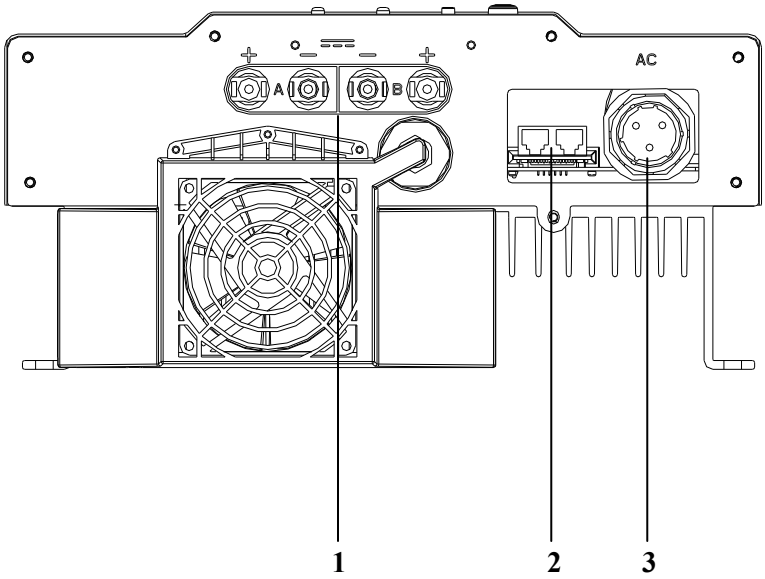

After remove the ornamental plate and connection cover, the plug connectors show above.

| Object | Description |
|---|---|
| 1 | DC input: Plug connectors for connecting the PV modules. Their polarity is positive, negative, negative and positive terminals, respectively, which are signed in the front of the inverter. |
| 2 | Communication connecting area. Eversol inverters are configured with RS485 interface as standard, and users can change it to RS232 interface. |
| 3 | Terminal for grid connection (AC output). They are signed by A, B and C, respectively. When wiring please note that, A is corresponding to N wire, B is corresponding to L wire, and C is to PE wire. |



**Notes:**

1. After the inverter has been installed in its fixed position, the electrical connection to the unit can be established.
2. Make sure Max. Open Voltage and short-circuit current of the PV string accord with the Spec.
3. Choose the appropriate cable width for AC / DC wire (AWG12, 2.5 $mm^2$).
4. To connect the inverter, the AC and DC side must be disconnected from all power sources and secured against being inadvertently switched back on.
5. Before connecting inverter to PV modules and public grid, please make sure the polarity is correct.

## 5.3.1 Connection to the public grid (AC)



**Attention!**

You must safeguard each inverter with an individual breaker in order that the inverter can be safely disconnected under load.

There are two different AC connectors. Whatever which one you get, please connect AC wires with the inverter via it obey the procedures below:

**Connection Procedure by the connector 1:**



1. Switch off the breaker and secure against being inadvertently switched back on.
2. Prepare the cable and bare the ends of each wire as shown in the figure (in mm).

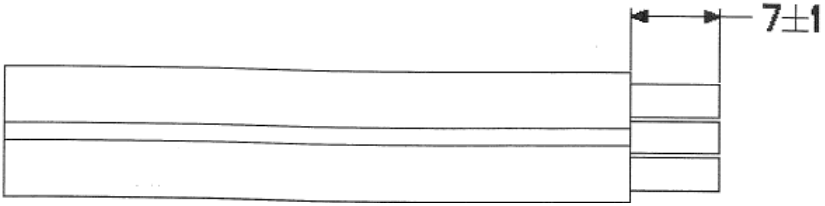


3. Screw off every component of AC connector and pull the cable (three wires including L, N and PE) through those components as shown in the figure below. Insert the bared wires ends including L, N and PE into the corresponding three holes of the connector terminal and then fully tighten all screws. The polarity of each hole is signed around the holes. Please note that wire L must be connected to hole L, wire N to hole N and wire PE to hole PE.

**Connect the wires:**

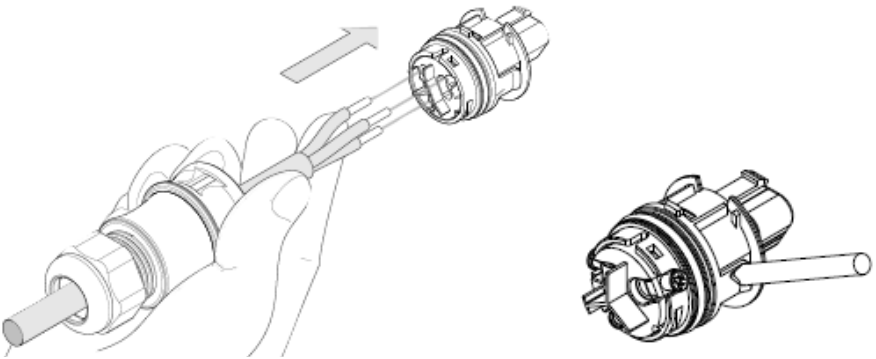

**Disconnect the wires:**

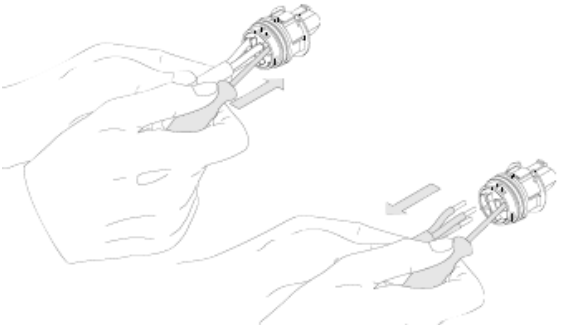

| | |
|---|---|
| **Wire L** | **Hole L** |
| **Wire N** | **Hole N** |
| **Wire PE** | **Hole** ⏚ |

4. After fasten the three wires with the terminal, combine every component together.

**Close the connector:**

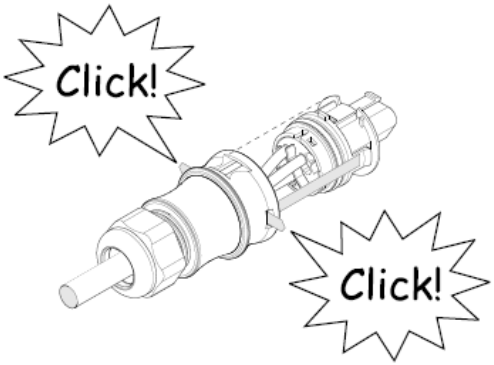


**Open the connector:**

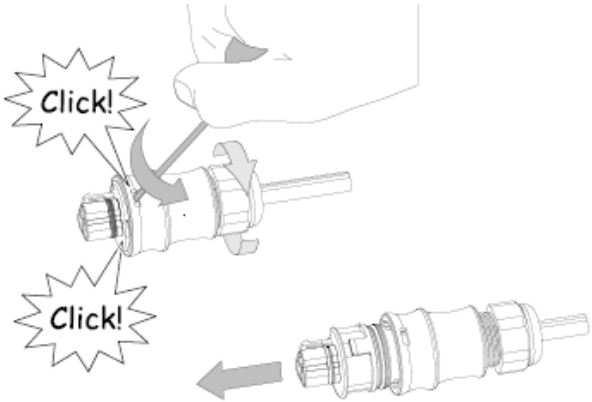

5. Finally, connect the AC connector to the AC terminal on the inverter. Pay attention to the polarity of the terminals avoid wrong connecting.

**Lock the housing:**

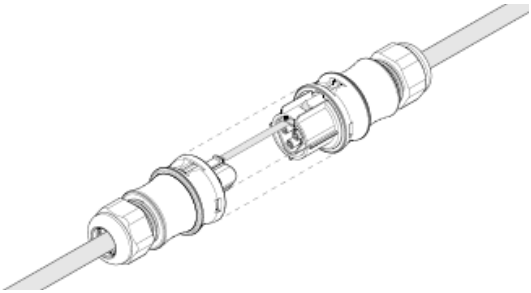

**Unlock the housing:**

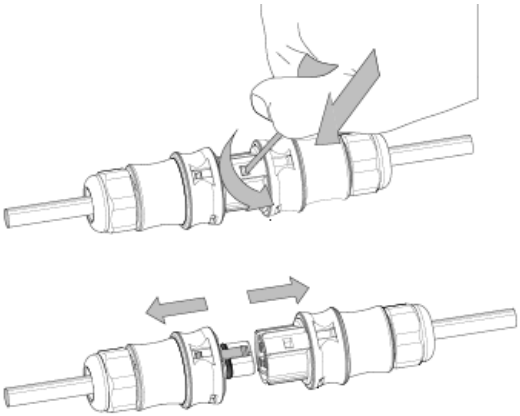

**Connection procedure by the connector 2:**

1. Switch off the breaker and secure against being inadvertently switched back on.
2. Prepare the cable and bare the wire ends 7mm.
3. Screw off every component of AC connector as shown in the figure below.

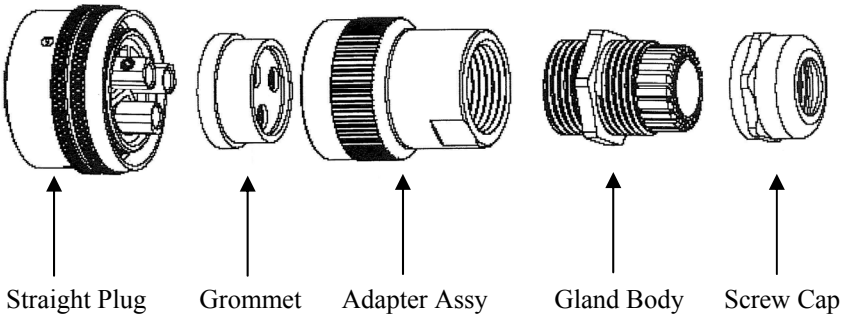


4. Pull the cable through the components below from right to left.

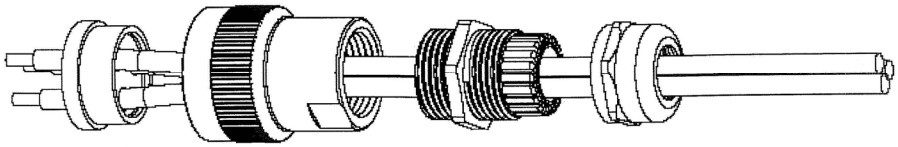

5. Loosen the three screws on the back of the straight plug in order to insert the bared N L and PE wire ends into the corresponding A, B and C terminals, and then fully tighten the screws by a 2 mm internal hexagonal wrench.

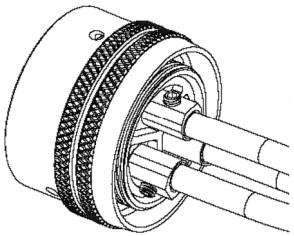

| | |
|---|---|
| A ↔ A | → N wire |
| B ↔ B | → L wire |
| C ↔ C | → PE wire |

**Attention!**

Don't confuse the polarity of the terminals. On every terminal of the straight plug is signed A, B and C, and the same signs appear close to the AC terminal on inverter. Which reminds the users how to make the connection, A is corresponding to N wire, B is corresponding to L wire, and C is to PE wire.

6. Aim the terminals on the straight plug to the holes of the grommet, and then compress them together. After that tighten the adapter assy, gland body and screw cap in turn with a wrench.

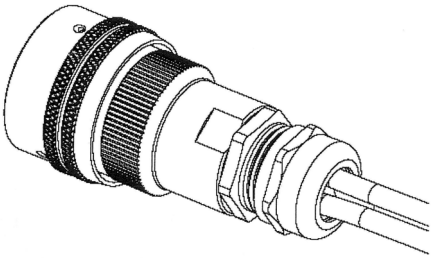

7. Finally, connect the straight plug to the AC terminal on inverter. Pay attention to the polarity of the terminals avoid wrong connecting. Terminal A is corresponding to hole A, B to B and C to C.

**Attention!**
Do not switch on the AC breaker until the PV generator has been connected and all of the devices have been fixed.

## 5.3.2 Connection to the PV generator (DC)

**Attention!**

In order to safeguard the installation and startup of the device, a manual circuit breaker must be configured on the DC side out of the inverter. The breaker should have certain capacity of over current and overvoltage. In addition, before cutting off the connection of DC side, please cut off the AC side connection first.

The PV generator strings are connected directly to the terminal in the connection box.

**Two strings can be connected to the Eversol TL4600 and TL5400**

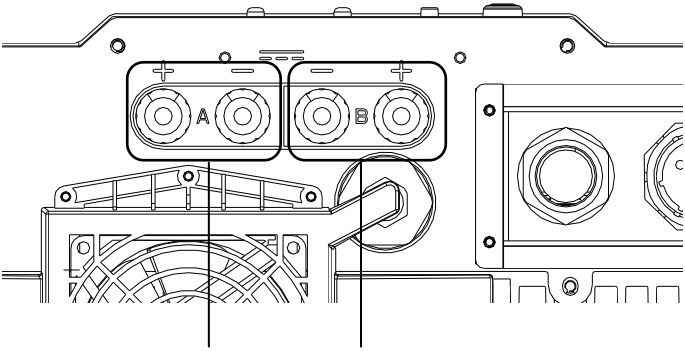


**$A^+$ and $A^-$** **$B^+$ and $B^-$**

Please connect $A^+$ and $A^-$, $B^+$ and $B^-$. Like $A^+$ and $B^-$, $B^+$ and $A^-$ is wrong, which will cause the inverter out of work, for A and B, they work under different conditions.

**Only one string can be connected to the Eversol TL2100 and TL3200**

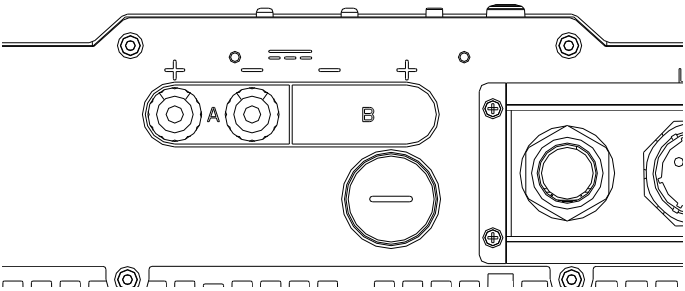

**Attention!**

1. The voltage of the solar generator must be measured before connecting the DC cables to the inverter terminals. The DC voltage must not exceed the maximum input voltage. Connecting to a higher voltage will destroy the unit.
2. The total short-circuit current of the PV module should be less than the inverter's maximum DC current.
3. Before connecting PV modules to DC terminals, please make sure the polarity of the strings is correct.
4. The DC connection of Eversol TL4600 and TL5400 are two strings. If you only make use of one string, please seal up the other string connectors by seal caps.
5. Please use professional tools to disassemble the connectors.

| Type | Maximum input voltage | Maximum input current |
|---|---|---|
| Eversol-TL2100 | 580 V | 18 A |
| Eversol-TL3200 | 580 V | 20 A |
| Eversol-TL4600 | 680 V | 20 A |
| Eversol-TL5400 | 680 V | 25 A |

Connect the PV generator and inverter using MC IV connectors below. Connect the positive and negative terminals from the PV module to positive (+) terminals and negative (-) terminals on the inverter.

DC+



Female coupler



Female metal contact



Cap

DC-



Male coupler



Male metal contact



Cap

**Connection Procedure:**

1. Switch off the circuit breaker and secure against being inadvertently switched back on.
2. Prepare the cable and bare the end with a stripping pliers as shown below.




3. Connect the cable together with MC IV connector.
   - Insert the metal contact into the middle hole of the crimping pliers.
   - Put the bare end of the cable onto the metal contact.
   - Compress them togeter with the crimping pliers.

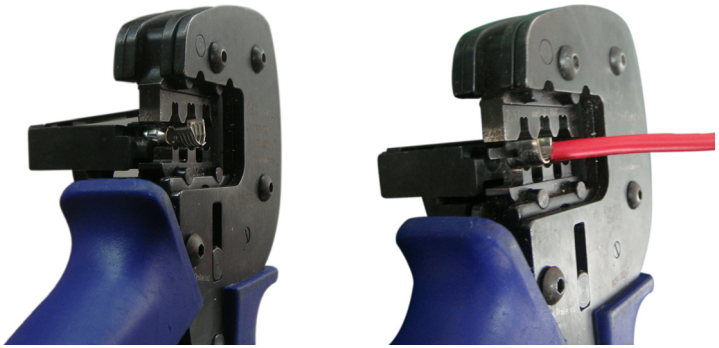

   - Slide the cap over the cable.
   - Plug the metal contact together with the cable to the corresponding coupler. And then turn the cap to the coupler.

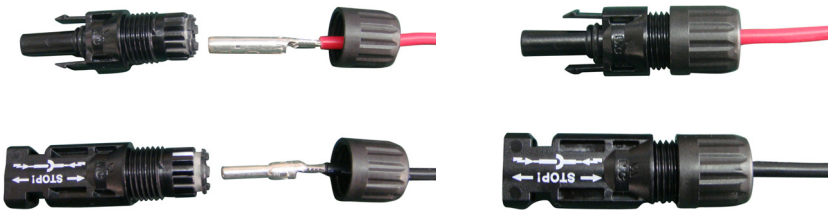


4. Plug the MC IV connector to DC terminal on Eversol.

## 5.4 Startup

After completing the mechanical and electrical installation, the inverter is put into operation as follows:

1. Switch on the DC and AC breakers.
2. The inverter starts up automatically when DC-power from the PV generator is sufficient. There are three normal states during its operation:

**Waiting:** When DC voltage of PV generator is greater than 125V (minimum startup voltage) but lower than 150V (minimum working voltage). The inverter waits for sufficient power.

**Checking:** When DC voltage of PV generator is greater than 150V, the inverter is checking feeding conditions.

**Normal:** After checking, the inverter operates in the normal state, and the green LED light up. Meanwhile, it feeds power into the grid, and shows present power in LCD display.

As long as the inverter working, it tracks the maximum power from your PV modules (MPPT) in any condition.

The inverter automatically stops when the PV power is not enough.



**Notes:**

If the inverter is in "**Fault**" state, look over the FAQ part in operating manual.

## 5.5 Communication

A PV system with inverters can be monitored in different ways. Eversolar New Energy provides you RS232 and RS485.

### 5.5.1 Communication through RS232

The current data of the PV inverter can be transmitted to PC through RS232 interface. The maximum length of the cable for RS232 is 10 m. In addition, the firmware can be

updated via RS232. Because an inverter can only communicate with one PC through RS232 at the same time, this communication method is usually used during updating the software。

**The definition of the pins of RS232:**

| | |
|---|---|
| Pin1--------NC<br>Pin2--------TX<br>Pin3--------RX<br>Pin4--------NC<br>Pin5--------GND | 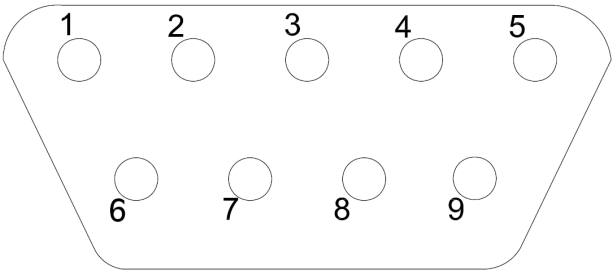 |
| Pin6--------NC | Pin8--------NC |
| Pin7--------NC | Pin9--------NC |

**The connected graph of RS232 for communication:**

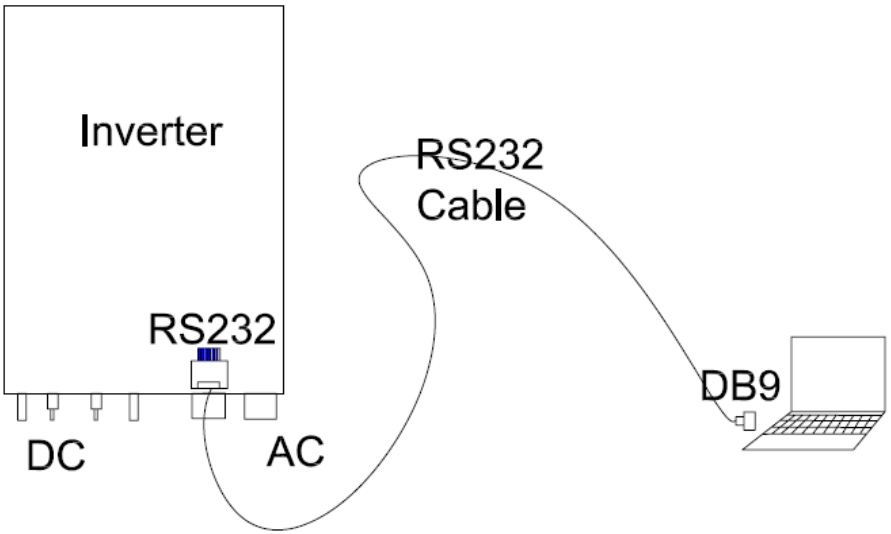


**Notes:**

If your computer doesn't have the DB9 communication interface, you can use RS232-USB cable to achieve this function.

## 5.5.2 Communication through RS485

RS485 is used for multipoint communication. Up to 50 inverters can communicate and be monitored through one cable. But the maximum length of the cable should not surpass 1000 m. All the inverters, which communicate through one cable, should use the provided RS485 interface. The connected graph of RS485 for one inverter is shown below.

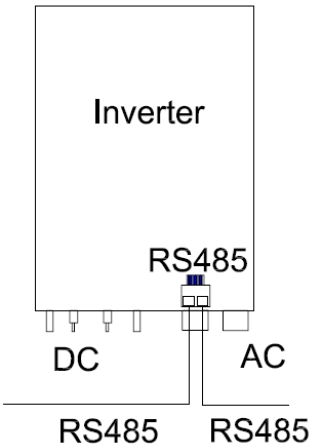


The connected graph of the monitoring system, in which the multipoint communication of the inverters can be realized through RS 485 interface, is shown below. The software “AS Control” in the PC can communicate with several inverters or monitor several inverters at the same time.

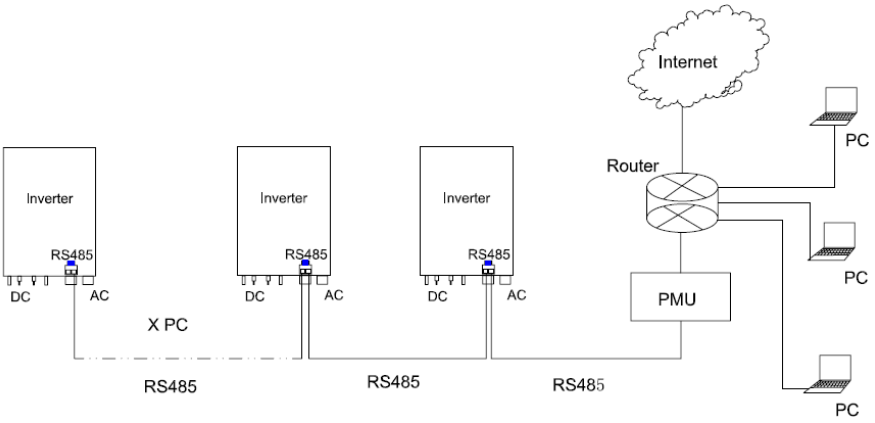

**The definition of the pins of RS485 for Eversol-TL series:**

| | |
|---|---|
| Pin1------- TX_RS485A | 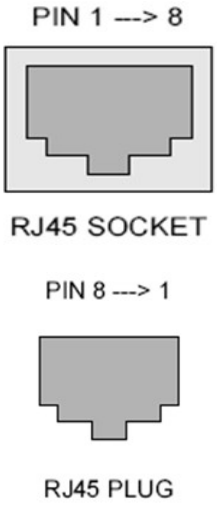 |
| Pin2-------TX_RS485B | |
| Pin3-------RX_RS485A | |
| Pin4-------GND | |
| Pin5-------GND | |
| Pin6-------RX_RS485B | |
| Pin7-------+7V | |
| Pin8-------+7V | |



**Connection procedure:**

1. Pull RS485 cable through three components below including gland body, sealing insert plug and dome nut, and screw down. We provide you plugs with no hole, one hole and two holes. If no communication, you should use the plug without hole. According to different requirement, users can choose one-hole or two-hole plug.

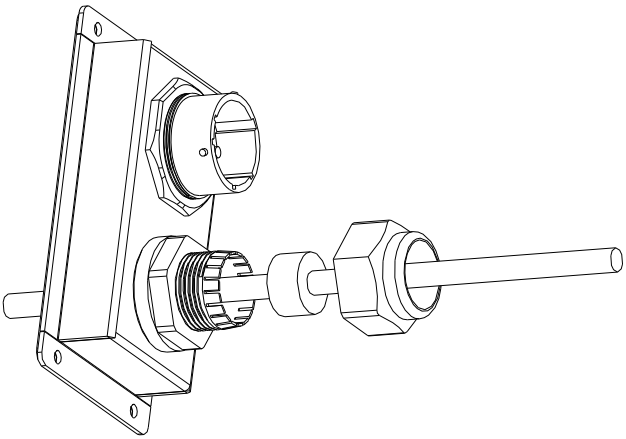

2. A RS485 cable is composed by eight wires with different color. Cut off outside envelope to reveal the eight wires. Then make the end of every wire straight, and put them in order.




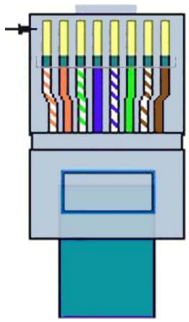


The connection between crystal connectors and RS485 wires is one-to-one correspondence, one pin of crystal connector to one specific color wire, as shown in the table below.

| The number of the pins of crystal connector | Color of the RS485 wires |
|---|---|
| 1 | Orange and white |
| 2 | Orange |
| 3 | Green and white |
| 4 | Blue |
| 5 | Blue and white |
| 6 | Green |
| 7 | Brown and white |
| 8 | Brown |



3. Insert the eight wires to corresponding slots of the crystal connector at the same time, and then press them together by a professional tool.

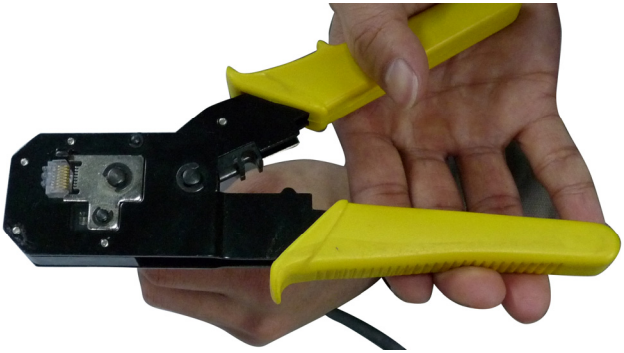

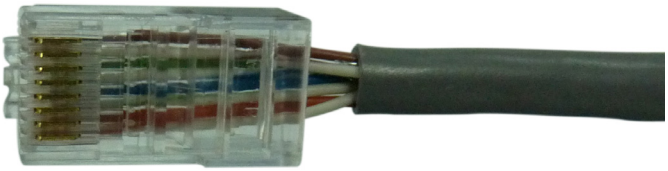

4. Connect the other end of RS485 cable to crystal connector by repeating the procedure 3 and 4.
5. The inverter can connect with a PMU by a RS485 cable at both ends with a crystal connector. After the PMU connects with PC by Ethernet or USB, the inverter can communicate with PC.

**Notes:**
The wires connection sequence of two ends of a RS485 cable is the same.

## 5.6 Safety protection

### 5.6.1 Grid voltage and frequency protection

Eversol inverters monitor the voltage and frequency level of the grid. If the level is outside the range permitted by state grid standard, the inverter stops feeding and restarts only when the grid voltage and frequency return to normal.

### 5.6.2 Over temperature monitoring

The inverter is intended to be used under +60 °C. When the temperature reaches 70 °C, power is derating and derating to zero as it up to 85 °C. When the heat peak temperature has decreased, the inverter starts up again automatically.

### 5.6.3 Ground fault current interruption (GFCI)

AC/DC-sensitive residual current device monitors the leakage and residual current from the inverter's grid connection to the PV generator and disconnects the circuit within 0.3 s when the ground/leakage current exceeds 300 mA.
The residual current rises by 30 mA, 60 mA and 150 mA, the inverter must stop feeding in 0.3 s, 0.15 s and 0.04 s, respectively.

### 5.6.4 Isolation fault detection

Before connecting, the isolation resistance in DC side has to be larger and equal than 1 KΩ/V. This is proportional to max. DC input voltage. However, the minimum resistance must be larger than 500 KΩ. If the isolation resistance is lower than the permitted value, the inverter will stop working and show "Isolation fault" on the LCD.

### 5.6.5 Earthing fault monitoring

If there is an earth fault including no earthing or reversing the wire of PE and L or N. The inverter will detect before feeding.

### 5.6.6 Active anti-islanding protection

The inverter monitors the islanding effect actively. It stops feeding within 5 s and shows "utility loss" on the LCD if the island effect occurs, then automatically reconnects when the error has been eliminated.

### 5.6.7 DC current injection monitoring

The Eversol is integrated with DC current injection monitoring unit. If the DC current injection is larger than 1 A, the inverter will stop feeding in 2 s.

### 5.6.8 DC reverse polarity protection

The Eversol monitors the polarity of DC side, and it will not work if the DC polarity reverses.

# 6 Contact

If you have technical problems about our product, you can contact us via:

www. ever-solar.com

ADD: Building 9 No. 198 Xiangyang Road, CN-215011 Suzhou, China

Tel.: +86 512 6937 0998

Fax: +86 512 6937 0630

Email: service@ever-solar.com