Hydro Boy 4500

Power inverter for fuel cell application



- Advanced technology
- High efficiency
- Configurable to customer specific requirements
- High reliability and availability
- Low specific costs
- Based on standard products
- Extensive data system technology available
- RS232, RS485, CAN, Ethernet

The Specialist ...

The Hydro Boy is an inverter specifically designed for your fuel cell system. Developed on the basis of the well proven photovoltaic inverters, SMA provides a technically sophisticated product at reasonable price. The Hydro Boy is the specialist for grid feeding that is flexible, cooperative and highly communicative due to its open interfaces.

Exemplary system configuration with SMA's communication technology

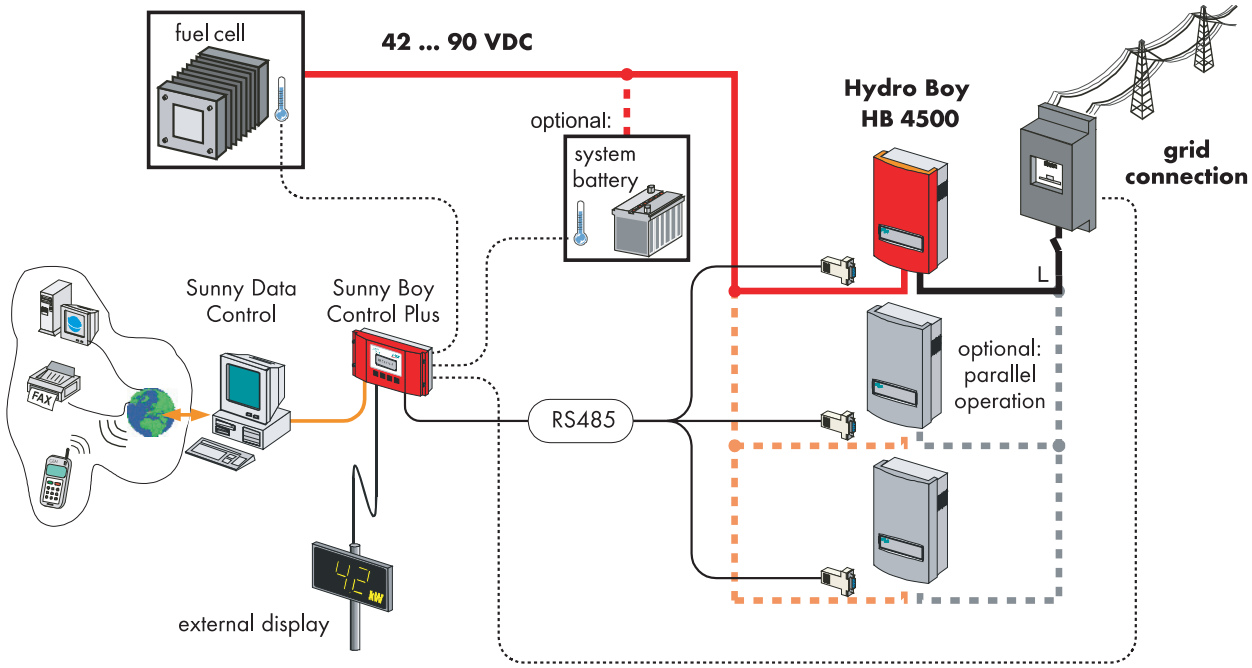

The SMA Hydro Boy HB 4500 inverter for fuel cell applications is based on the state-of-the-art technology of SMA's PV inverters. The HB 4500 is characterized by highest reliability and efficiency as well as its open interfaces. Depending on your fuel cell system, the HB 4500 can be configured and optimized according to your specific requirements. Personal and plant safety are essential features at SMA: The Hydro Boy offers electric separation, insulation monitoring, overvoltage protection, and an automatic disconnection according to VDE 0126. SMA Hydro Boys are expandable with the SMA's Sunny Boy communication accessories. We completely cover all the different kinds of communication applications for plants with the Sunny Boy data technology. This provides all possible monitoring concepts for plants both for grid connection or for island grids.

Technical data

Input variables		
Max. input voltage	$U_{DC\ max}$	90 V DC
Input voltage	U_{DC}	42 ... 90 V DC
Max. input current	$I_{DC\ max}$	120 A
Nominal input power	$P_{DC\ nom}$	4500 W at 40° C
Max. input power	$P_{DC\ max}$	5000 W
Max. voltage rippel	$U_{PP\ max}$	< 10 % at UDC max
Output variables		
Max. output power	$P_{AC\ max}$	4200 W
Harmonic distortion of output	THD_{IAC}	< 4 %
Short-circuit resistance		grid side current control
Nom. AC voltage	U_{AC}	230 V
Nom. AC frequency	f_{AC}	50 Hz
Max. efficiency		94 %

Interfaces	RS232, RS485, CAN
	Ethernet
Mechanical data	
Enclosure	IP 2x (IP 30 practicable)
Weight	approx. 39 kg
Size	390 mm x 590 mm x 245 mm
Safety	
All-pole disconnector on grid side	Independent disconnection device, 2 independent systems
Personnel protection	Ground Fault monitoring
Ambient Conditions	
Max. permitted ambient temperature	+ 50° C

SMA Technologie AG

Hannoversche Strasse 1–5
34266 Niestetal
Germany
Tel. +49 561 9522 0
Fax +49 561 9522 100
www.SMA.de

SMA America, Inc.

12438 Loma Rica Drive, Unit C
Grass Valley, CA 95945
USA
Tel. +1 530 273 4895
Fax +1 530 274 7271
www.SMA-AMERICA.com

HB4500-11-BE3705 : Hydro Boy and SMA are registered Trademarks of SMA Technologie AG. The technical information on this document can be subject to change without prior notice.