1 Extended technical Data

1.1 KACO blueplanet 360 NX3

AC-Power	
Inverter power nominal	363 kVA (@30°C); 363 kVA (@40°C & @>1080 VDC)
Inverter power maximal	363 kVA
Rated current (In)	3 x 262 A
Contribution to short circuit current continuous (max output fault current)	262 A
Power electronics type	IGBT-MLI (self-commutated)
Rated operating voltage	800 V (3P+PE)
cos phi nominal	≈ 0.80 ind …0.80 cap
Grid connection	Three-phase
Impedance at 165 Hz *	RPar ≈ 8,95 Ω, XPar ≈ 7,98 Ω
Impedance at 175 Hz *	RPar ≈ 8,41 Ω, XPar ≈ 8,55 Ω
* Scheme in parallel	

Operating behaviour in the event of a short circuit at the inverter output	
Contribution to peak short-circuit current (îp)	556 A
Contribution to the initial short-circuit alternating current (Ik" first single period effective value)	263 A

Injection of DC currents

A converter must not feed in more than 0.5% of its rated current or a maximum of 20 mA (whichever is higher) as direct current.

Flicker

Power in %	5	10	20	30	40	50	60	70	80	90	100	Max
Grid impedance angle	Flicker step factor											
30	0,019	0,021	0,021	0,020	0,019	0,021	0,020	0,020	0,020	0,020	0,024	0,024
50	0,013	0,014	0,014	0,013	0,013	0,014	0,013	0,013	0,013	0,013	0,016	0,016
70	0,010	0,011	0,011	0,011	0,010	0,011	0,011	0,011	0,011	0,011	0,013	0,013
85	0,010	0,011	0,010	0,010	0,010	0,010	0,010	0,010	0,010	0,010	0,012	0,012

Power quality characteristics

Max. number of switching operations, N_{10}	20			
Max. number of switching operations, N_{120}	240			
Case of switching operation	Cut-in at 10 % of rated power			
Grid impedance angle	30°	50°	70°	85°
Flicker step factor	0,053	0,035	0,028	0,027
Voltage change factor	0,124	0,124	0,124	0,124

Case of switching operation	Cut-in at 100 % of rated power			
Max. number of switching operations, N_{10}	20			
Max. number of switching operations, N_{120}	240			
Grid impedance angle	30°	50°	70°	85°
Flicker step factor	0,022	0,015	0,012	0,011
Voltage change factor	0,040	0,040	0,040	0,040

EN

Case of switching operation	Service disconnection at rated power			
Max. number of switching operations, N_{10}	20			
Max. number of switching operations, N_{120}	240			
Grid impedance angle	30°	50°	70°	85°
Flicker step factor	0,064	0,042	0,034	0,032
Voltage change factor	0,426	0,426	0,426	0,426

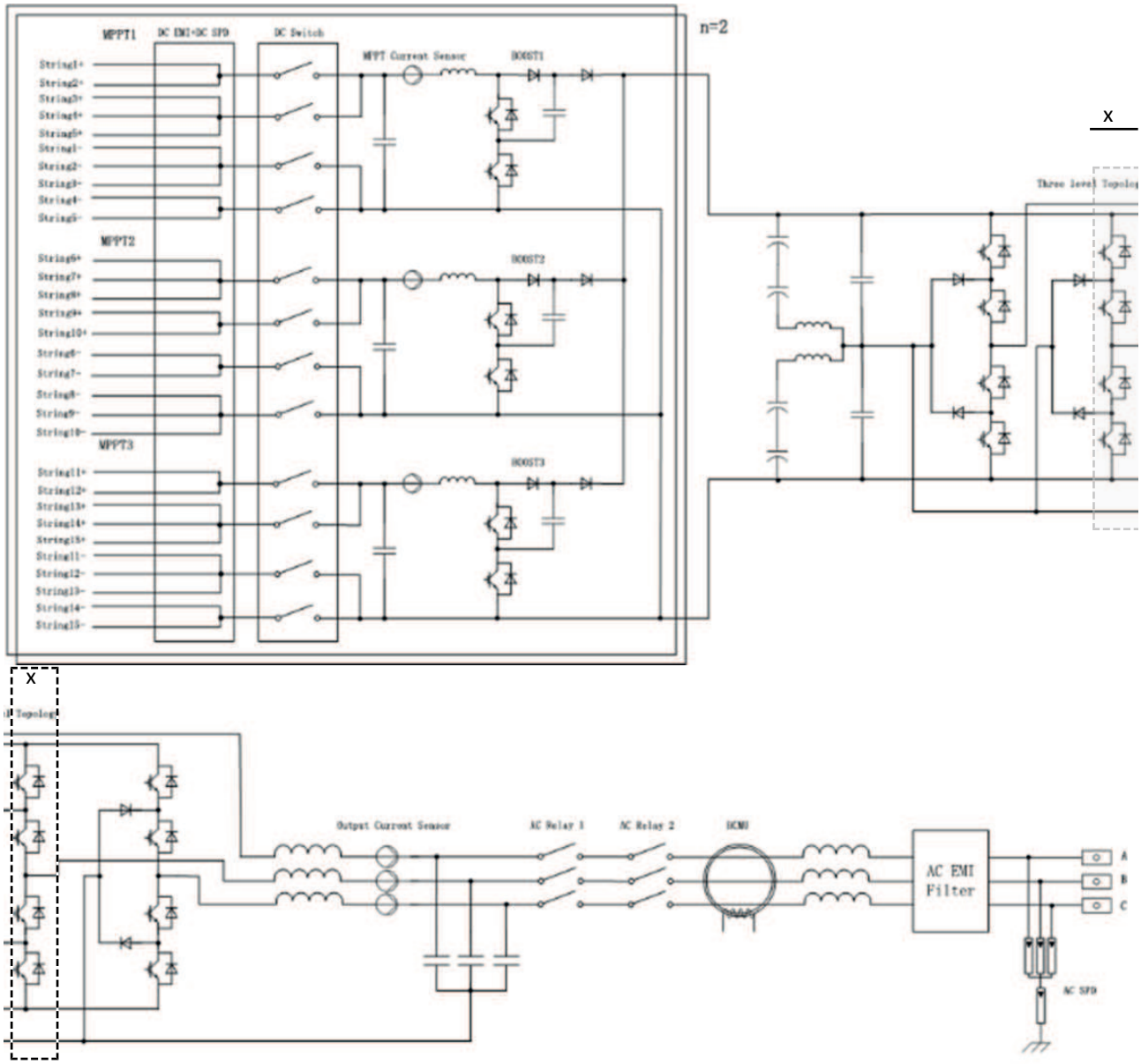

Fig. 1: Block schema blueplanet 360 NX3

Harmonics 50 Hz	[A] Preliminary	[%In] Preliminary
1	261,848	99,762
2	0,210	0,08
3	0,247	0,094
4	0,168	0,064
5	0,139	0,053
6	0,047	0,018
7	0,092	0,035
8	0,037	0,014
9	0,102	0,039
10	0,105	0,04
11	0,150	0,057
12	0,094	0,036
13	0,113	0,043
14	0,126	0,048
15	0,073	0,028
16	0,066	0,025
17	0,066	0,025
18	0,063	0,024
19	0,110	0,042
20	0,089	0,034
21	0,100	0,038
22	0,073	0,028
23	0,081	0,031
24	0,068	0,026
25	0,223	0,085
26	0,152	0,058
27	0,129	0,049
28	0,108	0,041
29	0,157	0,06
30	0,052	0,02
31	0,194	0,074
32	0,113	0,043
33	0,052	0,02
34	0,045	0,017
35	0,089	0,034
36	0,052	0,02
37	0,126	0,048
38	0,084	0,032
39	0,047	0,018
40	0,110	0,042

Tab. 1: Harmonics at full load and 1080 VDC

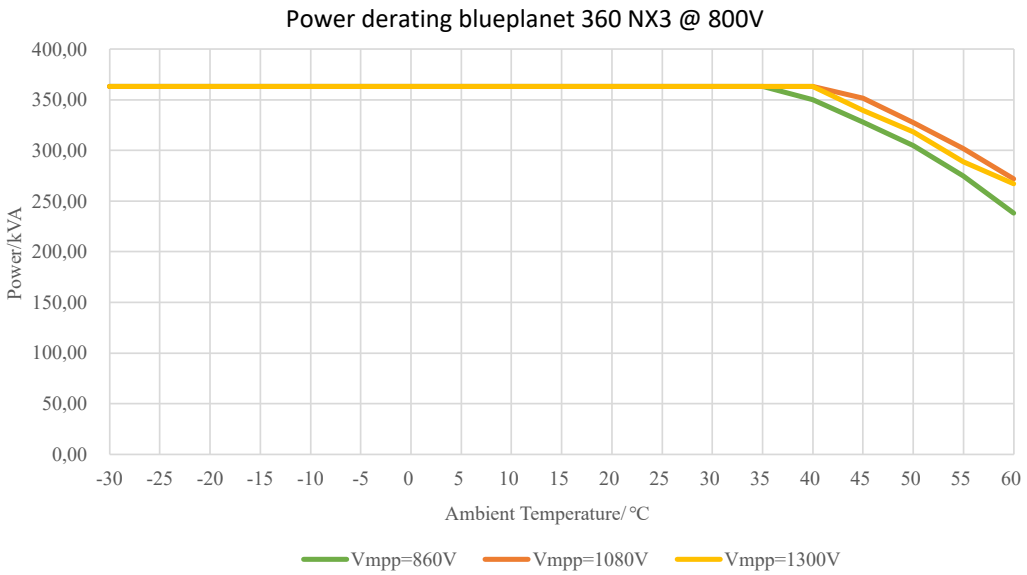

Fig. 2: Power derating at blueplanet 360 NX3

Efficiency characteristic

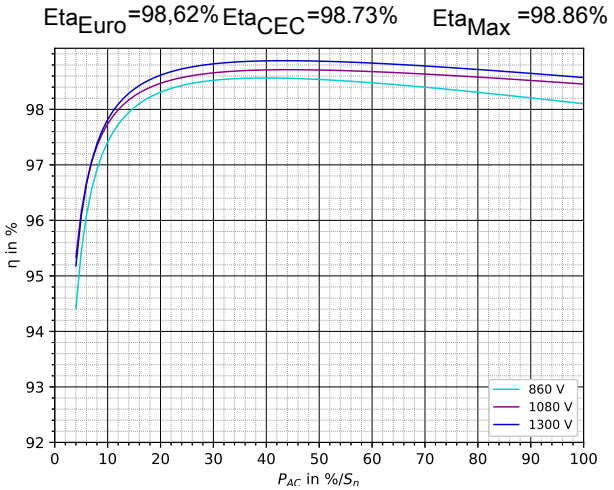

Fig. 3: 2D Diagram blueplanet 360 NX3 M6

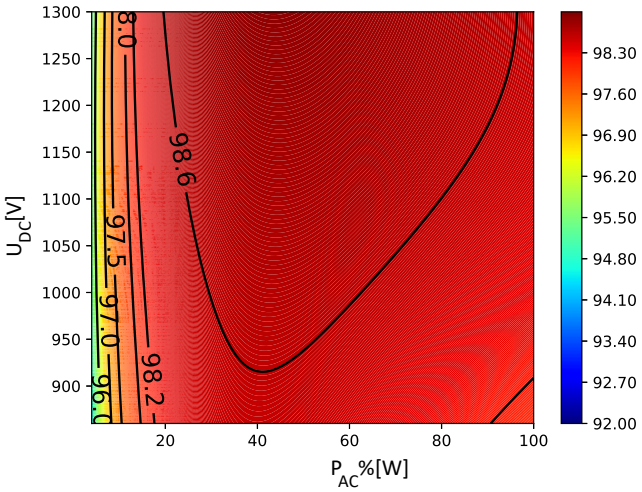

Fig. 4: 3D Diagram blueplanet 360 NX3

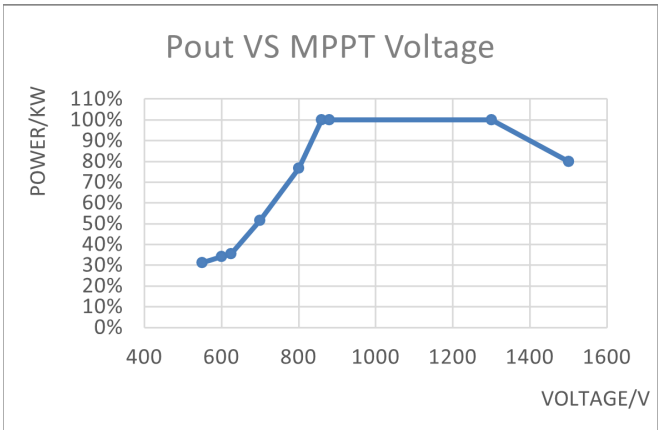

Fig. 5: 2D Diagram %Pout/Pn vs Voltage 360 NX3

3017402-01-260324

The text and figures reflect the current technical state at the time of printing. Subject to technical changes. No liability for printing errors.

KACO new energy.

Werner-von-Siemens-Allee 1 · 74172 Neckarsulm · Germany · Tel. +49 7132 896-1000 · info@kaco-newenergy.de · www.kaco-newenergy.de