SOFAR

User manual

Solar Grid-tied Inverter

Product Model: SOFAR 100K-136KTL-PRO



Shenzhen SOFARSOLAR Co., Ltd.

Preface ..... - 1 -
1. Basic Safety Information ..... - 3 -
1.1. Requirement for Installation and Maintenance ..... - 3 -
1.2. Symbols and signs ..... - 6 -
2. Product Characteristics ..... - 9 -
2.1. Intended Use ..... - 9 -
2.2. Function Description ..... - 12 -
2.3. Electrical block diagram ..... - 14 -
2.4. Efficiency and derating curve ..... - 15 -
2.5. Others ..... - 16 -
3. Inverter Storage ..... - 18 -
4. Installation ..... - 19 -
4.1. Installation Process ..... - 19 -
4.2. Checking Before Installation ..... - 19 -
4.3. Tools ..... - 21 -
4.4. Determining the Installation Position ..... - 24 -
4.5. Moving of inverter ..... - 27 -
4.6. Installation ..... - 29 -
5. Electrical Connection ..... - 34 -
5.1. Electrical Connection ..... - 35 -
5.2. Terminal Connector ..... - 35 -
5.3. Grounding Connection (PE) ..... - 36 -
5.4. Connect grid side of inverter(AC-Output) ..... - 37 -
5.5. Connect PV side of inverter（DC-Input） ..... - 43 -
5.6. Communication Connection ..... - 46 -
6. Commissioning of inverter ..... - 52 -
6.1. Cable Connection Inspection ..... - 52 -
6.2. Start Inverter ..... - 52 -

All copy reserved ©Shenzhen SOFARSOLAR Co., Ltd.

7. Operation interface ..... - 54 -
7.1. Operation and Display Panel ..... - 54 -
7.2. Standard Interface ..... - 55 -
7.3. Main Interface ..... - 58 -
7.4. Updating Inverter Software ..... - 61 -
8. Trouble shooting and maintenance ..... - 63 -
8.1. Troubleshooting ..... - 63 -
8.2. Maintenance ..... - 69 -
8.3. PID Recovery ..... - 70 -
9. Technical Data ..... - 72 -
9.1. Parameter table ..... - 72 -
10. Quality Assurance ..... - 74 -

All copy reserved ©Shenzhen SOFARSOLAR Co., Ltd.

Preface

Notice

The products, services or features you purchased shall be subject to the company's commercial contracts and terms. All or part of the products and services described in this document may not within the scope of your purchase. Unless additional terms and conditions in your contract, the company does not make any statement or guarantee on the contents of this document.

Save this Instruction

This manual must be considered as an integral part of the equipment. Customer can print the electronic version to hard copy and keeping properly for future reference. Anyone who operates the device at any time must operate in accordance with the requirements of this manual.

Copyright Declaration

The copyright of this manual belongs to Shenzhen SOFARSOLAR Co., Ltd. Any corporation or individual should not plagiarize, partially cope or fully copy (including software, etc.), not allow to duplication and publishment in any form and any way. All rights reserved, SOFARSOLAR reserves the right of final interpretation. This manual subject to modify according to user's or customer's feedback. Please check our website at http://www.sofarsolar.com for lasted version.

Document Updates

V1.1 2023-03-21

Shenzhen SOFARSOLAR Co., Ltd.

Location:11/F., Gaoxinqi Technology Building, No.67 Area, Xingdong Community, Xin'an Sub-district, Bao'an District, Shenzhen City,China
Postcode: 518000
Company Website: www.sofarsolar.com
Email: service@sofarsolar.com

All copy reserved ©Shenzhen SOFARSOLAR Co., Ltd.

- **Outline**

This manual is an integral part of SOFAR 100KTL-PRO to 110KTL-PRO. It describes the assembly, installation, commissioning ,maintenance and failure of the product. Please read it carefully before operating.

- **Scope of Validity**

This manual contains important instructions for:

SOFAR 100KTL-PRO **SOFAR 110KTL-PRO** **SOFAR 136KTL-HV-PRO**

- **Target Group**

This manual is for qualified electricians. The tasks described in this manual only can be performed by qualified electricians.

- **Symbols Used**

The following types of safety instruction and general information appear in this document as described below:

 Danger	"Danger"indicates a hazardous situation which, if not avoided, will result in death or serious injury.
 Warning	"Warning"indicates a hazardous situation which, if not avoided, could result in death or serious injury
 Caution	"Caution"indicates a hazardous situation which, if not avoided, could result in minor or moderate injury
 Attention	"Attention"indicates there are potential risks, if fail to prevent, may lead to equipment cannot normally or property damage.
 Note	"Note"provides additional information and tips that are valuable for the optimal operation of the product.

All copy reserved ©Shenzhen SOFARSOLAR Co., Ltd.

1.Basic Safety Information

Outlines of this Chapter

Please read the instruction carefully. Faulty operation may cause serious injury or death .

 Note	If you have any question or problem when you read the following information, please contact Shenzhen SOFARSOLAR CO., Ltd.

Safety Instruction

Introduce the safety instruction during installation and operation of SOFAR 100-136KTL-PRO

Symbols Instruction

This section gives an explanation of all the symbols shown on the inverter and on the type label.

1.1. Requirement for Installation and Maintenance

Installation of SOFAR 100-136KTL-PRO on-grid inverter must conform with laws, regulations, codes and standards applicable in the jurisdiction.

Before installing and adjusting the produce, please read all of instructions, cautions and warnings in this manual

Before connecting the product to the electrical utility grid, contact the local utility company for allowance. Also, this connection must be made only by qualified electrician.

If the failure persists, please contact the nearest authorized maintenance center. If you don't know which service center is closest to you, please contact your local distributor. Don't repair the product by yourself, which may lead serious injury or damage.

All copy reserved ©Shenzhen SOFARSOLAR Co., Ltd.

Qualified Person

When inverter is working, it contains lethal voltages and went hot in some area. Improper installation or misoperation could cause serial damage and injury. To reduce the risk of personal injury and to ensure the safe installation and operation of the product, only a qualified electrician is allowed to execute transportation, installation, commissioning and maintenance. Shenzhen SOFARSOLAR Co, Ltd. does not take any responsibility for the property destruction and personal injury because of any incorrect use.

Label and Symbols

SOFAR 100-136KTL-PRO has type label attach the side of product which contact important information and technical data, the type label must permanent attached to the product.

SOFAR 100-136KTL-PRO has warming symbol attache the product which contact information of safety operation. The warming symbol must permanent attached to the product.

Installation location requirement

Please install the inverter according to the following section. Place inverter in an appropriate bearing capacity objects (such as solid brick wall, or strength equivalent mounting surface, etc.) and make sure inverter vertical placed. A proper installation location must have enough space for fire engine access in order for maintenance if faulty occur. Ensure the inverter is installed in a wall ventilated environment and have enough air cooling cycle. Air humidity should less than 90%.

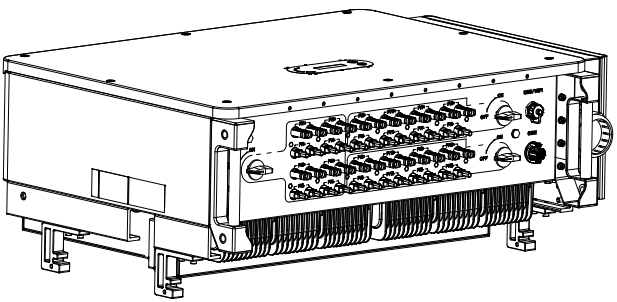



All copy reserved ©Shenzhen SOFARSOLAR Co., Ltd.

Transportation Requirement

Inverter is in the good electrical and physical condition when it ship out from factory. During transport, inverter must be placed in its original package or other proper package. Transportation company should responsible for any damage during transport period.

If you find any packing problems that may cause the damage of inverter or any visible damage, please notice the responsible transportation company immediately. You can ask your installer or SOFARSOLAR for help is necessary.

Electrical Connection

Please comply with all the current electrical regulations about accident prevention in dealing with the current inverter.

 Danger	Before the electrical connection, use opaque material to cover the PV modules or disconnect PV string DC switch. PV arrays will produce dangerous voltage if it is exposure under sun.
 Warming	All operation must accomplish by certified electrical engineer ● Must be trained; ● Completely read the manual operation and understand all information.
 Attention	Must get permission by local utility company before connecting to grid and the connection must be done by certified electrical engineers.

Operation

 Danger	Touching the utility grid or the terminal conductors can lead to lethal electric shock or fire! Do not touch non-insulated cable ends, DC conductors and any live components of the inverter. Attention to any electrical relevant instruction and document.
 Attention	Enclosure or internal components may get hot during operation. Do not touch hot surface or wear insulated gloves. Keep it away from kids!

All copy reserved ©Shenzhen SOFARSOLAR Co., Ltd.

Maintenance and repair

 Danger	Before any repair work, turn OFF the AC circuit breaker between the inverter and electrical grid first, then turn OFF the DC switch. After turning OFF the AC circuit breaker and DC switch wait for at least 5 minutes before carry any maintenance or repair work.
 Attention	Inverter should not work again until removing all faults. If any repair work is required, please contact local authorized service centre. Should not open the inverter cover without authorized permit, SOFARSOALR does not take any responsibility for that.

EMC/Noise Level

Electromagnetic compatibility (EMC) refers to that on electrical equipment functions in a given electromagnetic environment without any trouble or error, and impose no unacceptable effect upon the environment. Therefore, EMC represents the quality characters of an electrical equipment.

- The inherent noise-immune character: immunity to internal electrical noise
- External noise immunity: immunity to electromagnetic noise of external system
- Noise emission level: influence of electromagnetic emission upon environment

 Danger	Electromagnetic radiation from inverter may be harmful to health! Please do not continue to stay away from the inverter in less than 20cm when inverter is working

1.2. Symbols and signs

 Danger	High voltage of inverter may be harmful to health! Only certified engineer can operate the product; Juveniles, Disable, should not use this product; Keep this product out of the reach of children;
 Caution	Caution of burn injuries due to hot enclosure! Only touch the screen and pressing key of the inverter while it is working

All copy reserved ©Shenzhen SOFARSOLAR Co., Ltd.

 Attention	PV array should be grounded in accordance to the requirements of the local electrical grid company
 Warning	Ensure the maximum DC voltage input is less than the maximum inverter DC voltage (including in low temperature condition). Any damage cause by overvoltage, SOFARSOLAR will not take the responsibility including warranty

Signs on the Product and on the Type Label

SOFAR 100-136KTL-PRO has some safety symbols on the inverter. Please read and fully understand the content of the symbols before installation.

Symbols	Name	Explanation
	This is a residual voltage in the inverter!	After disconnect with the DC side, there is a residual voltage in the inverter, operator should wait for 5 minutes to ensure the capacitor is completely discharged.
	Caution of high voltage and electric shock	The products operates at high voltages. Prior to performing any work on the product, disconnect the product from voltage sources. All work on the product must be carried out by qualified persons only.
	Caution of hot surface	The product can get hot during operation. Avoid contact during operation. Prior to performing any work on the product, allow the product to cool down sufficiently
	Comply with the Conformite Euroeenne (CE) Certification	The product comply with the CE Certification
	Grounding Terminal	This symbol indicates the position for the connections of an additional equipment grounding conductor

All copy reserved ©Shenzhen SOFARSOLAR Co., Ltd.

	Observe the documentation	Read all documentation supplied with the product before install
	Positive pole and negative pole	Positive pole and negative pole of the input voltage (DC)
	Temperature	Indicated the temperature allowance range
	RCM logo	RCM (Regulatory Compliance Mark) The product complies with the requirements of the applicable Australian standards.

All copy reserved ©Shenzhen SOFARSOLAR Co., Ltd.

2.Product Characteristics

Outlines of this Chapter

Product Dimensions

Introduce the filed of use and the dimensions of the product

Function Description

Introduce working principle and internal components

Efficiency Curves

Introduce the efficiency curves of the product

2.1. Intended Use

SOFAR 100-136KTL-PRO is a transformerless on grid PV inverter, that converters the direct current of the PV array to the grid-compliant, three-phase current and feeds into the utility grid.

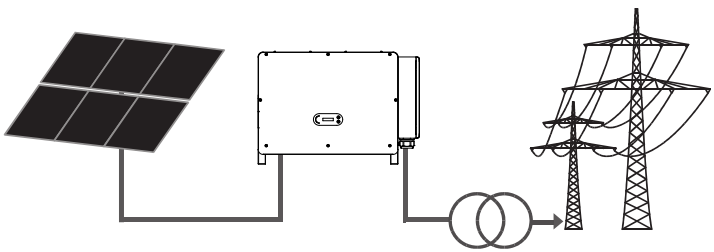

Figures 2-1PV Grid-Tied System

SOFAR 100-136KTL-PRO may only be operated with PV arrays (photovoltaic module and cabling) for on grid condition. Do not use this product for any other or additional purposes. Any damage or property loss due to any use of the product other than described in this section, SOFARSOLAR will not take the responsibility. DC input of the product must be PV module, other source such like DC sources, batteries will against the warranty condition and SOFARSOLAR will not take the responsibility.

All copy reserved ©Shenzhen SOFARSOLAR Co., Ltd.

Supported grid types

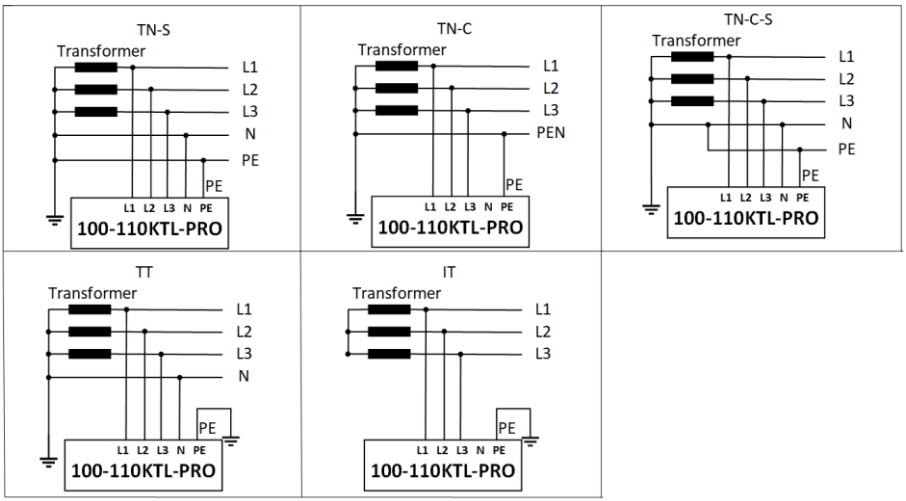

100-110KTL-PRO Supported grid type

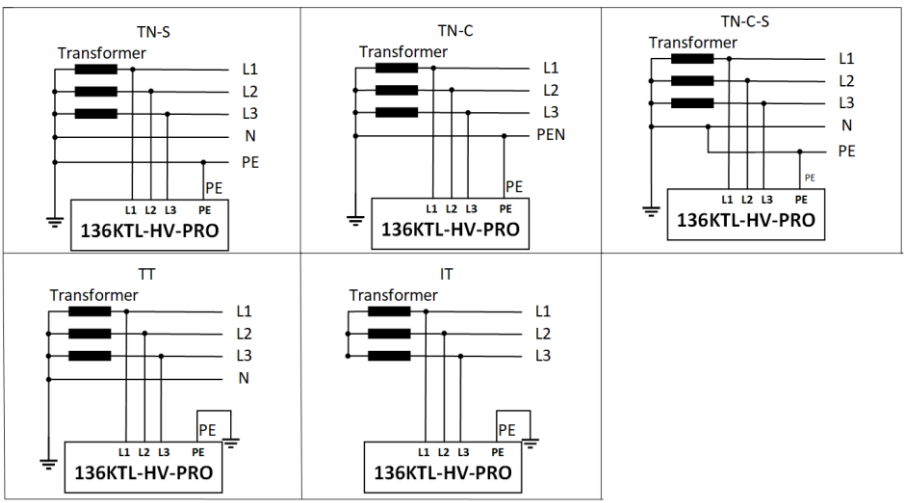

136KTL-HV-PRO Supported grid type

All copy reserved ©Shenzhen SOFARSOLAR Co., Ltd.

Product Dimensions

The choice of optional parts of inverter should be made by a qualified technician who knows the installation conditions clearly.

Dimensions Description

- SOFAR 100-136KTL-PRO

  L×W×H=995.5*663.5*368mm

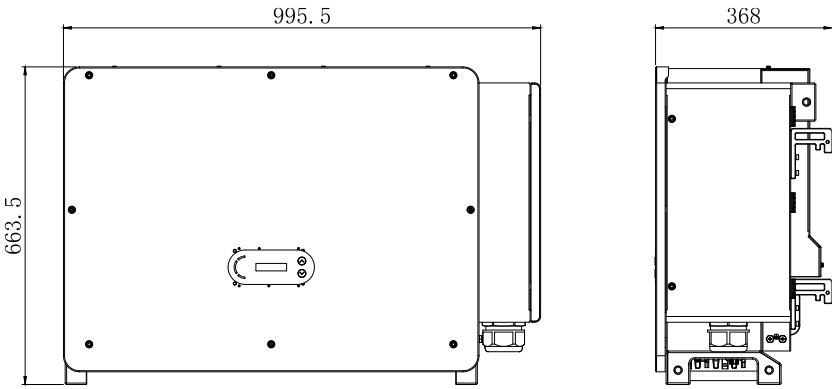

Figure 2-2 Product front view and left view dimensions

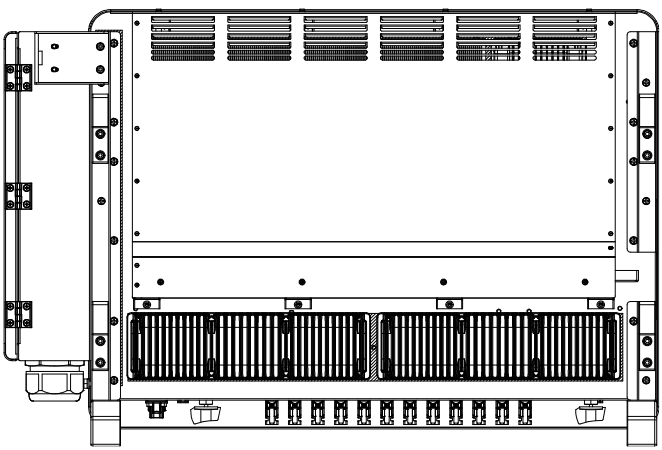

All copy reserved ©Shenzhen SOFARSOLAR Co., Ltd.

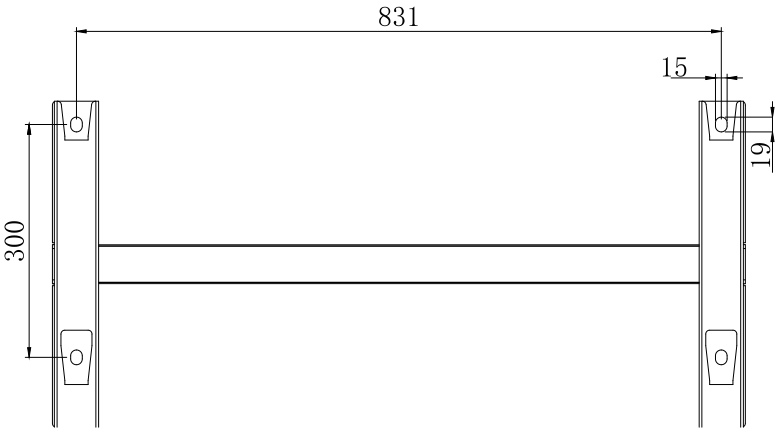

Figure 2-3 Product back view and bracket dimensions

◆ **Labels on the equipment**

Note: label must NOT be hidden with objects and extraneous parts (rags, boxes, equipment, etc.,); they must be cleaned regularly and kept visible at all times.

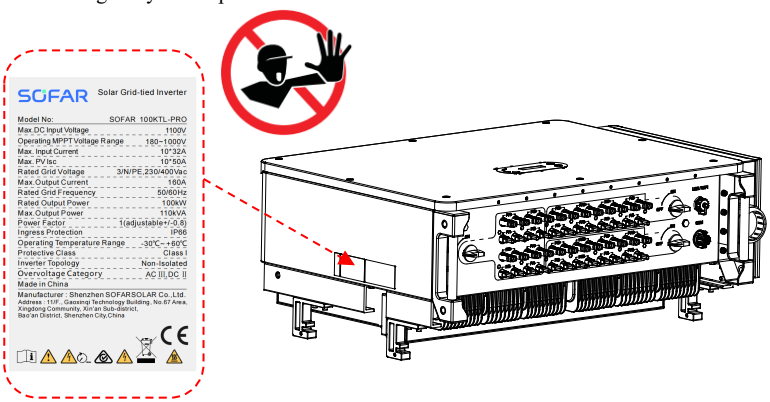

Figure 2-4 Product label

2.2. Function Description

DC power generated by PV arrays is filtered through Input Board then enter Power Board. Input Board also offer functions such as insulation impedance detection and input DC voltage/ current detection. DC power is converted to AC power by Power

All copy reserved ©Shenzhen SOFARSOLAR Co., Ltd.

Board. AC power is filtered through Output Board then AC power is fed into the grid. Output Board also offer functions such as grid voltage/ output current detection, GFCI and output isolation relay. Control Board provides the auxiliary power, controls the operation state of inverter and shows the operation status by Display Board. Display Board displays fault code when inverter is abnormal operation conditions. At the same time, Control Board can trigger the replay to protect the internal components.

Function Module

A. Energy management unit

Remote control to start/ shunt down inverter through an external control.

B. Feeding reactive power into the grid

The inverter is able to produce reactive power thus to feed it into the grid through the setting of the phase shift factor. Feed-in management can be controlled directly by the grid company through a RS485 interface.

C. Limited the active power fed into grid

If enable the limited of active power function, inverter can limit the amount of active power fed into the grid to the desired value (expressed as percentage).

D. Self-power reduction when grid is over frequency

If grid frequency is higher than the limited value, inverter will reduce the output power to ensure the grid stability.

E. Data transmission

Inverter or a group of inverters can be monitored remotely through an advanced communication system based on RS485 interface or via Wi-Fi/GPRS/Ethernet.

F. Software update

USB interface for uploading the firmware, remotely uploading is available.

G. PID recovery（optional function）

The PID effect can be recovered at night to protect the PV modules.

All copy reserved ©Shenzhen SOFARSOLAR Co., Ltd.

2.3. Electrical block diagram

SOFAR 100-136KTL-PRO has 20/24 DC input strings. 10/12 MPPT trackers that converters the direct current of PV array to grid-compliant, three phase current and feeds in into the utility grid. Both DC and AC side has Surge Protection Device (SPD).

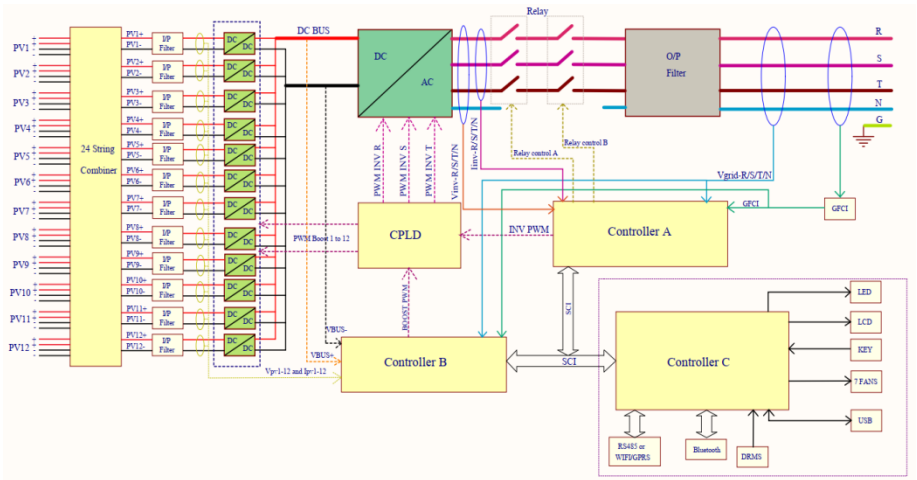

Figure 2-4 Schematic diaram

All copy reserved ©Shenzhen SOFARSOLAR Co., Ltd.

2.4. Efficiency and derating curve

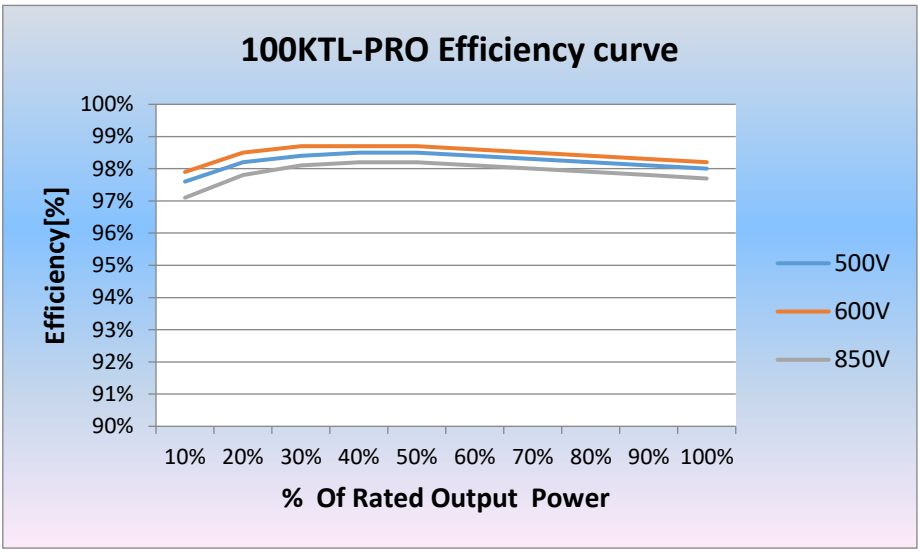

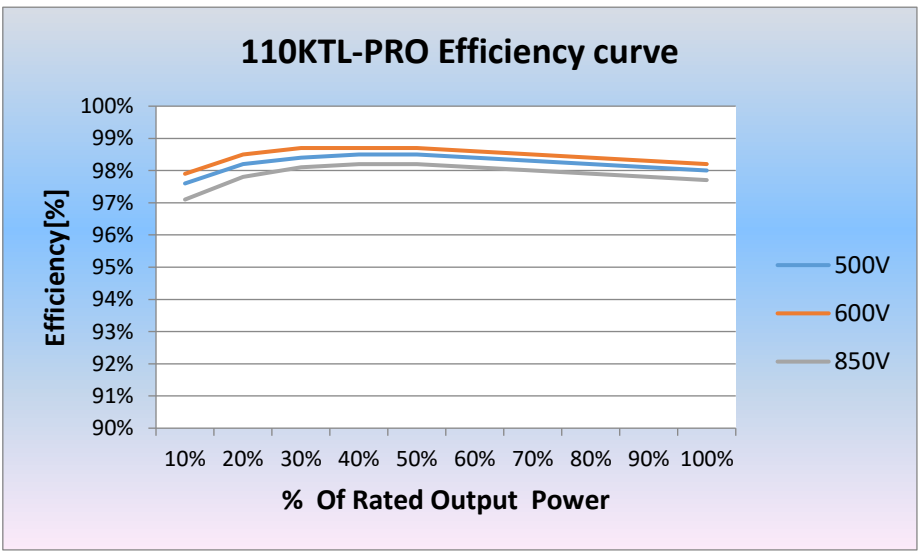

All copy reserved ©Shenzhen SOFARSOLAR Co., Ltd.

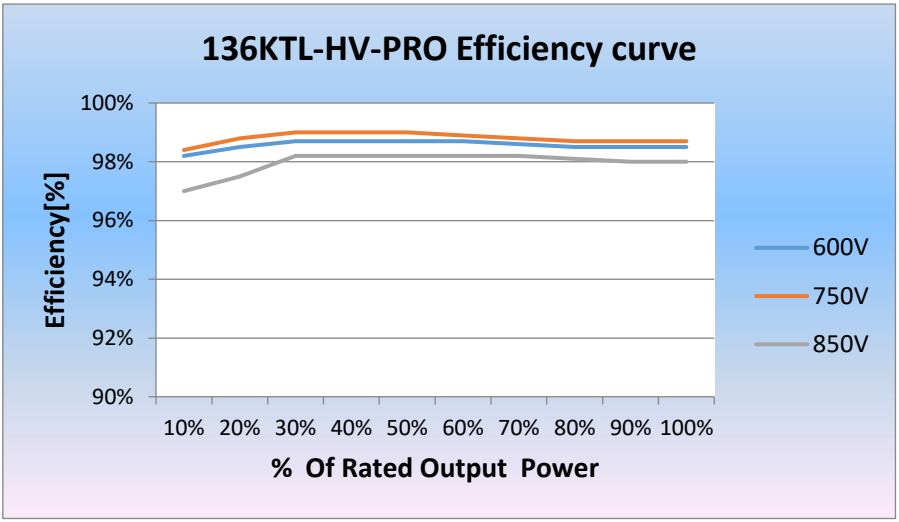

2.5. Others

- Initial short-circuit AC current is 756.7A-peak
- As indicated in VDE-AR-N 4105:2018-11, section 6 (Construction of the power generation system/network and system protection (NS protection), the requirements for the network and system protection differ depending on the maximum apparent power($SAmax^{\sum SAmax}$) of the generating and storage units connected to the same network connection point.
- For installations with $SAmax^{\sum SAmax} \leq 30kVA$, the NS protection can either be

■ a central NS protection at the central meter panel or decentralized in a sub-distribution; or
■ integrated NS protection

- The equipment models covered by this manual are all below this limit and both of these options can be chosen.
- For installations with $SAmax^{\sum SAmax} > 30kVA$, the NS protection must be accomplished by a central NS protection device at the central meter panel.

In the case, taking into account the equipment covered by this user manual, this situation will happen when several units are connected to the same network connection point.
Note: the NS protection shall meet that a single fault shall not lead to a loss of the protective function (single fault tolerance). The output is switched off redundant by

All copy reserved ©Shenzhen SOFARSOLAR Co., Ltd.

the high power switching bridge and two relay in series. This assures that the opening of the output circuit will also operate in case of one error. AC Relay Model HF167F-200, 830Vac/200A.

All models have been performed without an additional relay connected during VDE4105:2018 certification, to check the internal protection of the equipment.

All copy reserved ©Shenzhen SOFARSOLAR Co., Ltd.

3.Inverter Storage

If inverter is not installing immediately, storage condition need meet below requirements:

- Place inverter into the original package and leave desiccant inside, sealed tight with taps.
- Keep the storage temperature around -40℃～70℃, Relative humidity 0～95%, no condensation

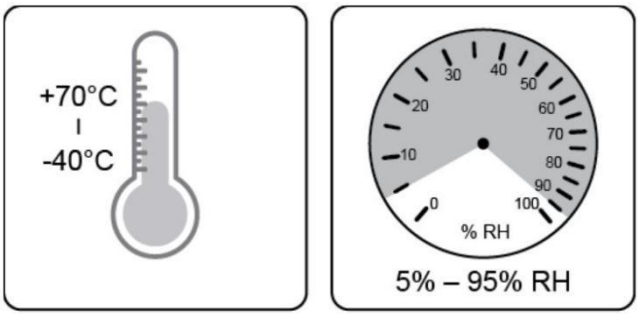

Figure 3-1 Storage temperature and humidity

- The maximum stacking layer number cannot exceed 4 layers.
- If the inverter be storage for more than half years, the inverter needs to be fully examined and tested by qualified service or technical personnel before using

All copy reserved ©Shenzhen SOFARSOLAR Co., Ltd.

4.Installation

Outlines of this Chapter

This topic describes how to install this product, please read carefully before install.

Dangers	Do NOT install the product on flammable material. Do NOT store this product in potentially explosive atmospheres.
Caution	The enclosure and heat sink will get hot during operation, please do not mount the product at a easy to reach location.
Attention	Consider the weight of this product when doing transport and moving. Choose an appropriate mounting position and surface. At least two persons for installation.

4.1. Installation Process

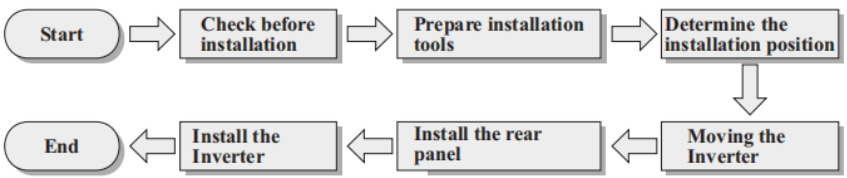

4.2. Checking Before Installation

Checking Outer Packing Materials

Before unpacking, please check the condition of the outer package materials if any damaged found, such as holes, cracks, please not unpack the product, contact your distributor immediately. Recommend installing the product within 24 hours after unpacking the package.

Checking Deliverable

All copy reserved ©Shenzhen SOFARSOLAR Co., Ltd.

After unpacking, please check according to following table, to see whether all the parts were included in the packing, please contact your distributor immediately if anything missing or damage.

Figure 4-1Components and mechanical parts that inside the package

No	Pictures	Description	Quantity
1	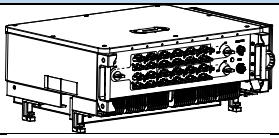	SOFAR 100-110KTL-PRO	1 pcs
2		Rear Panel	1 pcs
3	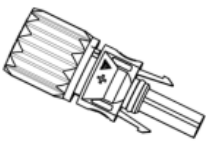	PV+ input connector	100KTL-PRO 20 pcs 110KTL-PRO 20 pcs 136KTL-HV-PRO 24 pcs
4	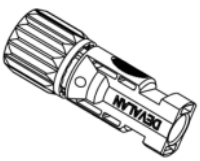	PV- input connector	100KTL-PRO 20 pcs 110KTL-PRO 20 pcs 136KTL-HV-PRO 24 pcs
5	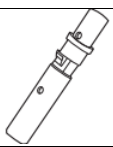	PV+ metal pin	100KTL-PRO 20 pcs 110KTL-PRO 20 pcs 136KTL-HV-PRO 24 pcs
6	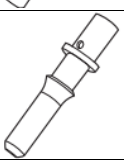	PV- metal pin	100KTL-PRO 20 pcs 110KTL-PRO 20 pcs 136KTL-HV-PRO 24 pcs
7	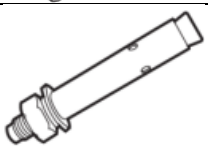	M10*90Hexagon screws	4 pcs

All copy reserved ©Shenzhen SOFARSOLAR Co., Ltd.

8	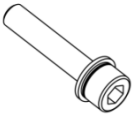	M6*30 Hexagon screws	2 pcs
9		Manual	1 pcs
10		Warranty Card	1 pcs
11		Outgoing inspection report	1 pcs
12		Quality Certificate	1 pcs
13	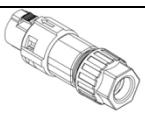	COM 16pin connector	1 pcs

4.3. Tools

Prepare tools required for installation and electrical connection as following table:

All copy reserved ©Shenzhen SOFARSOLAR Co., Ltd.

Figure 4-2 Installation tools

No	Tool	Description	Function
1	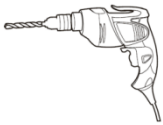	Hammer Drill Recommend drill @ 10mm	Used to drill holes on the wall
2	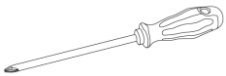	Screwdriver	Use to tighten and loosen screws when installing AC power cable Use to remove AC connectors from the product
3	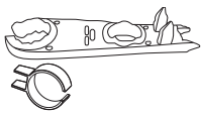	Removal Tool	Remove PV Connector
4	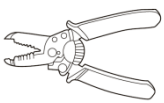	Wire Stripper	Used to peel cable
5	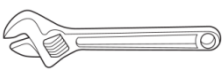	With an open end of larger than or greater than 32 mm	Used to tighten expansion bolts
6		Rubber Mallet	Used to hammer expansion bolts into holes

All copy reserved ©Shenzhen SOFARSOLAR Co., Ltd.

7		M6	M6 use to uninstall and install the front top cover and down cover
8		Torque wrench	Connect AC connector
9	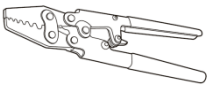	Crimping Tool	Use to crimp cable on grid side, load side and CT extensive cable
10	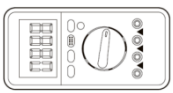	Multimeter	Check grounding cable, PV positive and negative pole
11	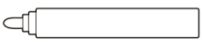	Marker	Mark signs
12	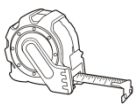	Measuring Tape	Measure distance
13	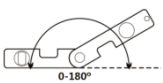	Level	Ensure the rear panel is properly installed
14	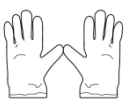	ESD gloves	Installer wear when installing product

All copy reserved ©Shenzhen SOFARSOLAR Co., Ltd.

15		Safety goggles	Installer wear when installing product
16		Mask	Installer wear when installing product

4.4. Determining the Installation Position

Select a appropriate location to install the product to make sure the inverter can work in a high efficiency condition. When selecting a location for the inverter, consider the following:

Note: Install vertical or backward tilt within 0-75°, Do not install forward or upside down!

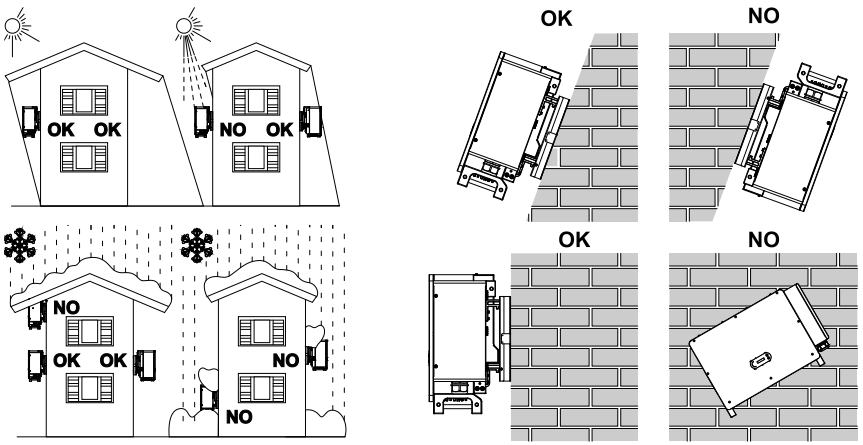

Figure 4-1 Installation Position Selection

All copy reserved ©Shenzhen SOFARSOLAR Co., Ltd.

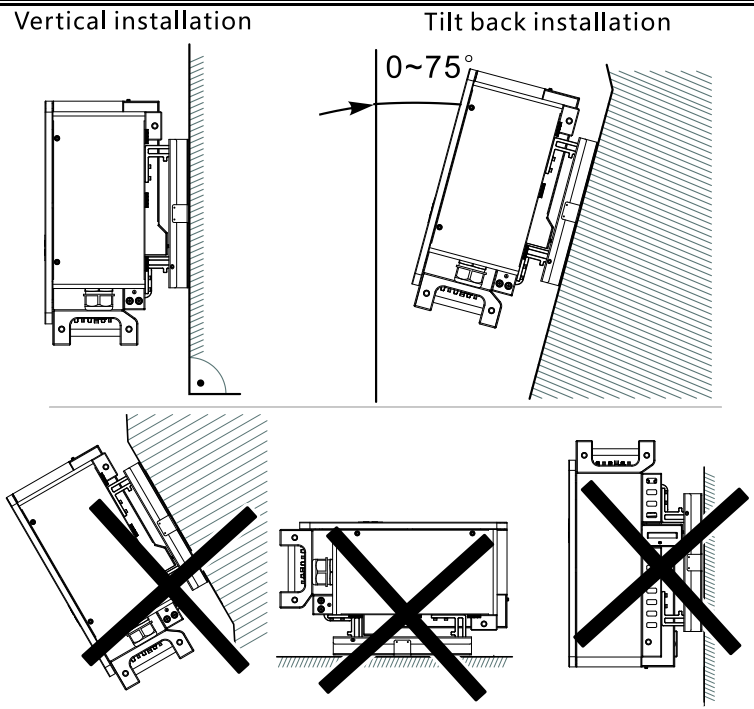

Figure 4-2 Clearance for single inverter

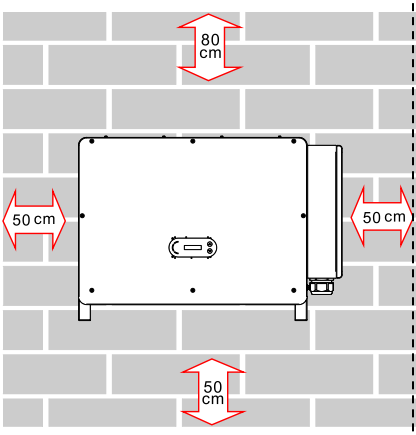

Note:

Other requirement for install position:

- Install position should obstruct the disconnect of power
- Place inverter in an appropriate bearing capacity objects
- Location should be avoid touch by children

All copy reserved ©Shenzhen SOFARSOLAR Co., Ltd.

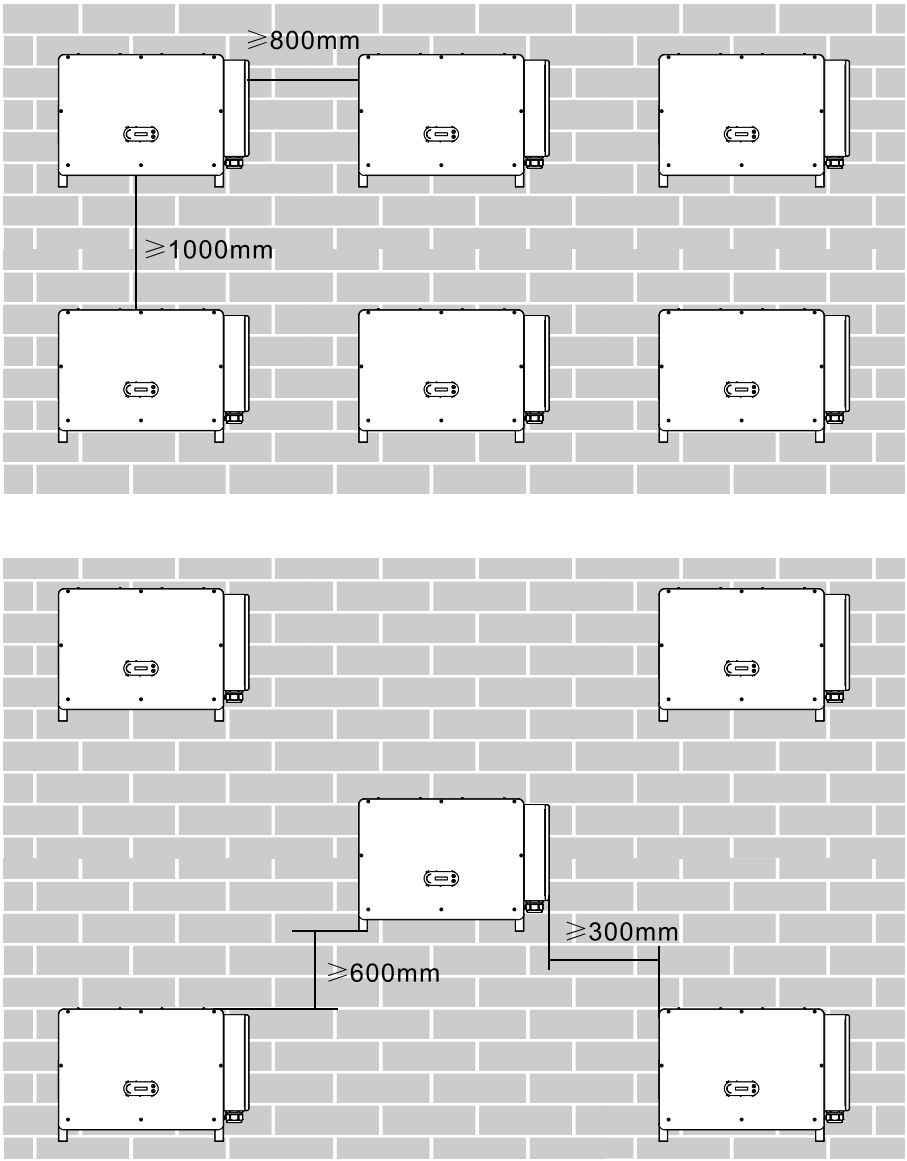

Figure 4-3 Clearance for multiple inverters

All copy reserved ©Shenzhen SOFARSOLAR Co., Ltd.

4.5. Moving of inverter

4.5.1 Manual handling

Unload the inverter from package, horizontally move to the install position. When open the package, at least two operator insert the hands into the slots on both side of the inverter and hold the handles.

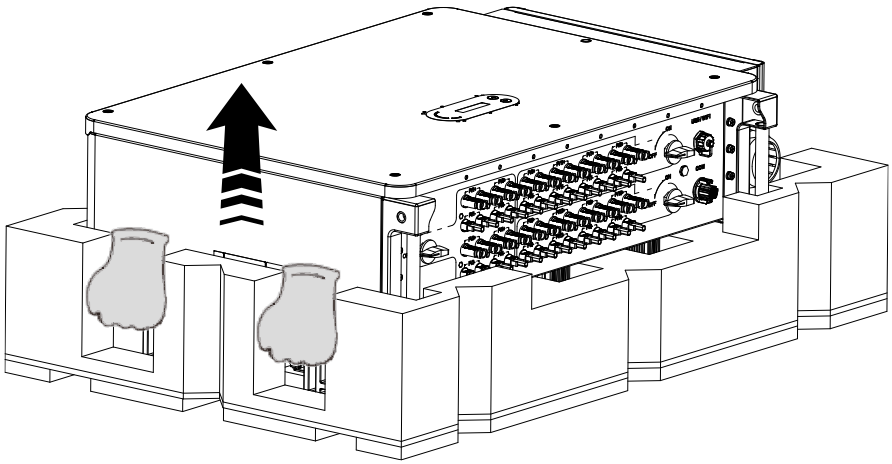

Figure 4-4 Move inverter from package

Attention	Keep the balance when lift the inverter. Required at least two operators for lifting or use forklift. Inverter is heavy, dropped while being transported may cause injuries. Do not put the inverter with wiring terminals contacting the floor because the power ports and signal ports are not designed to support the weight of the inverter. When place inverter on the floor, put it above foam or paper to avoid the damage of the shell of inverter Use auxiliary handle inside the package for moving the inverter. After use, keep it well for future usage.

All copy reserved ©Shenzhen SOFARSOLAR Co., Ltd.

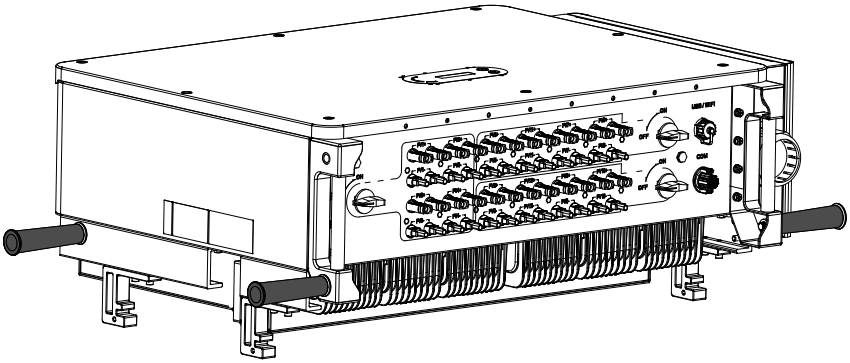

Figure 4-5 auxiliary handle position

4.5.2 Lifting Equipment

1. Tighten the screws of two M12 rings into the inverter sides according to the instruction diagram below (Note: M12 rings need self-preparation).

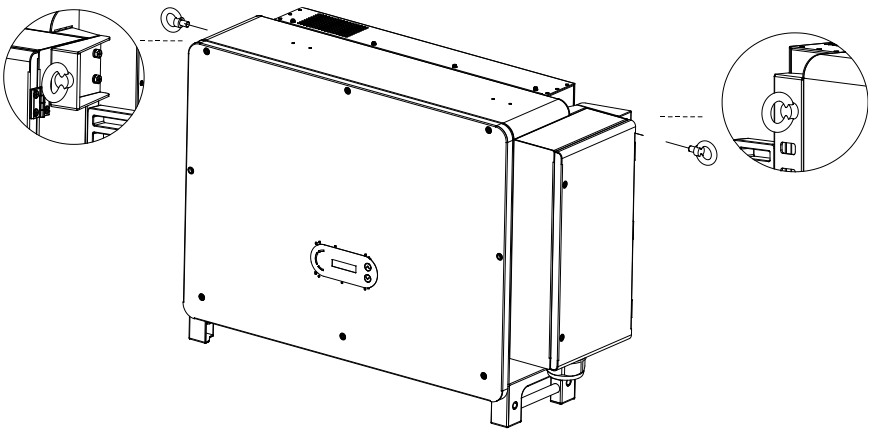

Figure 4-6 Installation of Rings

2. Fastened and tied the rope through two rings. Lifting inverter 50mm above ground by using lifting equipment, check the tightening device of the hoisting ring and rope. After confirming that the binding connection is secure, lift the inverter to the destination.

All copy reserved ©Shenzhen SOFARSOLAR Co., Ltd.

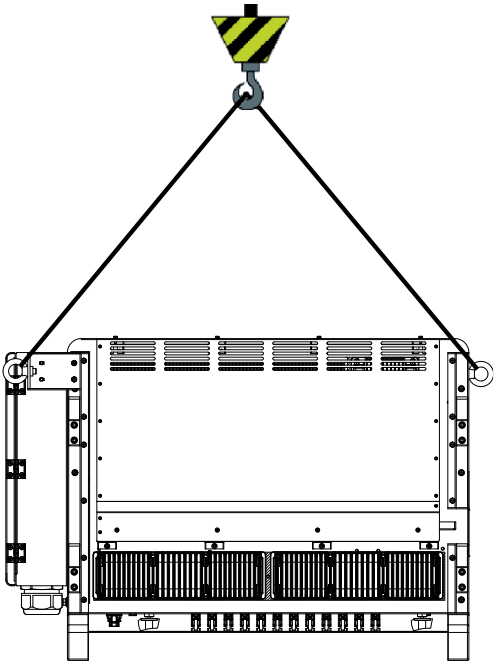

Attention	Keep balance when lifting the inverter, avoid to crash on wall or other objective Stop working in bad weather condition such as raining, heavy fog, winding

4.6. Installation

4.6.1 Installed on wall:

Step 1: Placed the rear panel on the mounting wall, determine the mounting height of the bracket and mark the mounting poles accordingly. Drilling holes by using Hammer Drill, keep the hammer drill perpendicular to the wall and make sure the position of the holes should be suitable for the expansion bolts.

All copy reserved ©Shenzhen SOFARSOLAR Co., Ltd.

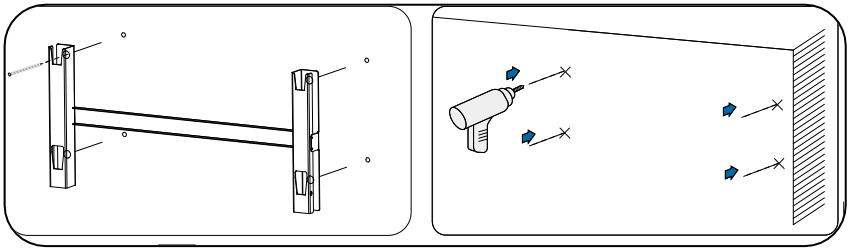

Figure 4-8 Drilling holes on the mounting wall

Step 2: Insert the expansion bolt vertically into the hole;

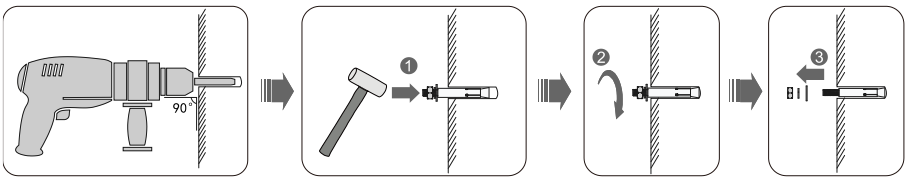

Figure 4-9 Screws into the holes

Step 3: Align the rear panel with the hole positions, fix the rear panels on the wall by tightening the expansion bolt with the nuts

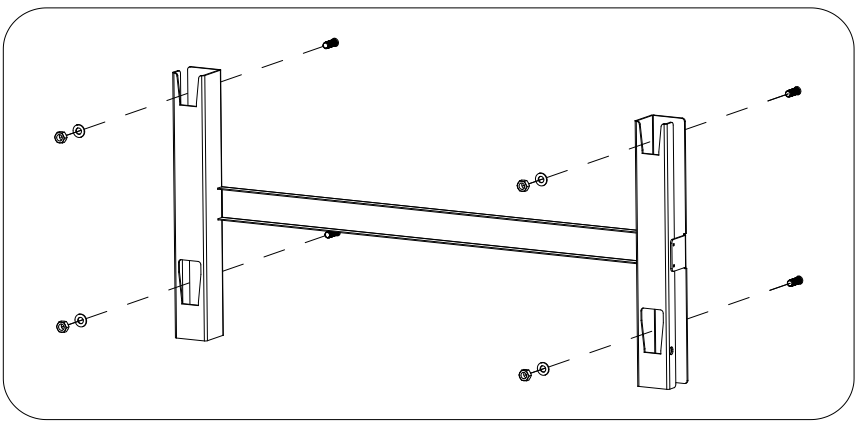

Figure 4-10 Install rear panel

Step 4: Lift the inverter and hang it on the rear panel,and fixing both side of inverter with M6 screw (accessories).

All copy reserved ©Shenzhen SOFARSOLAR Co., Ltd.

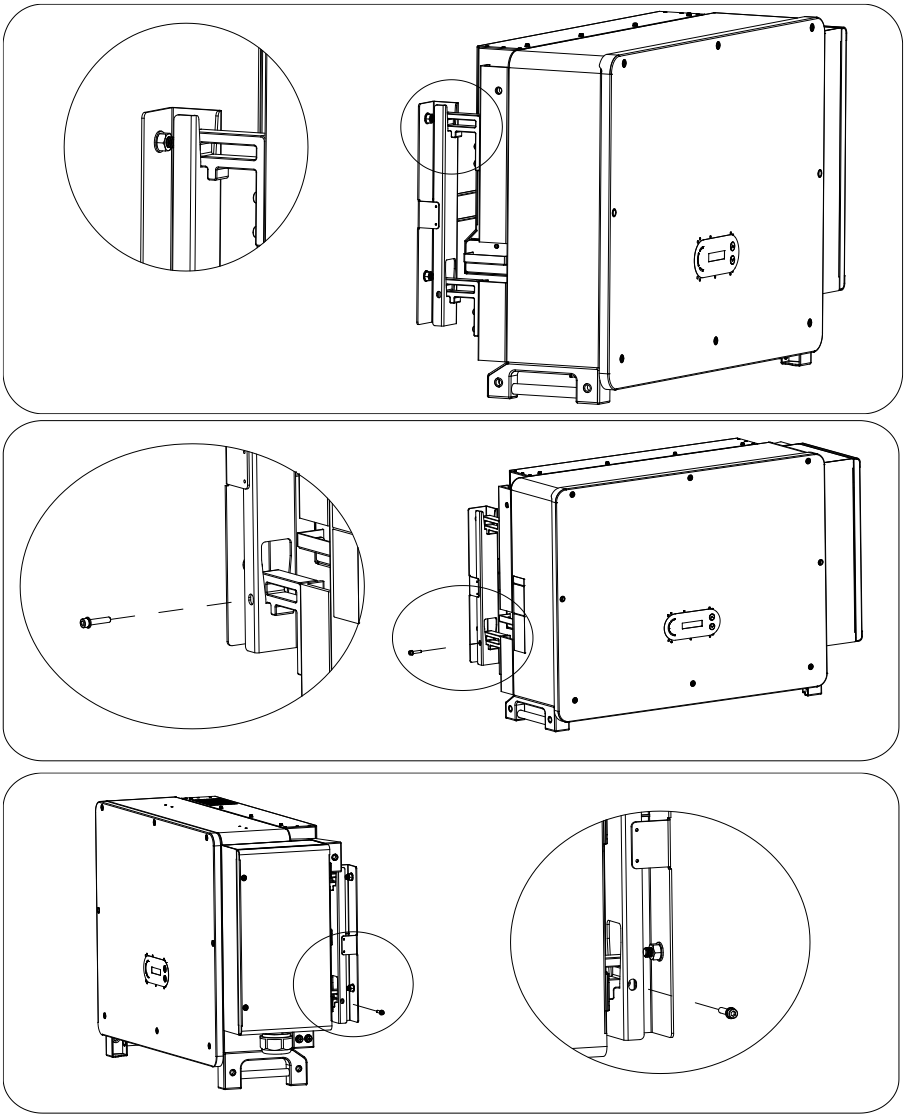

Figure 4-11 Fix inverter

4.6.2 Bracket Installation:

Step 1: Use wall mount bracket, ensure the pole position are in same level by using level rule and take a mark with maker.

All copy reserved ©Shenzhen SOFARSOLAR Co., Ltd.

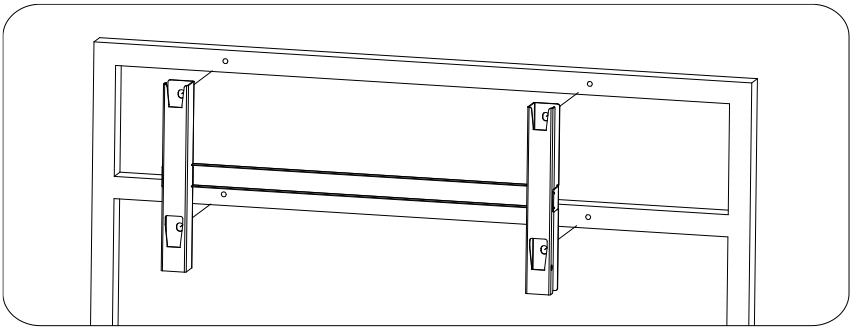

Figure 4-12 Ensure hole position

Step 2: Drilling hole by using Hammer Drill, recommend to do a stain proofing

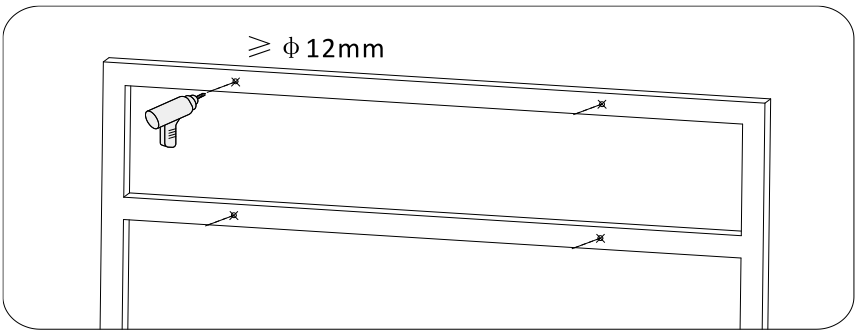

Figure 4-13 Drilling holes

Step 3: Use M10 screw and M10 flat washer to secure the wall bracket（Note：M10*50 screw and M10 flat washer need self-preparation）

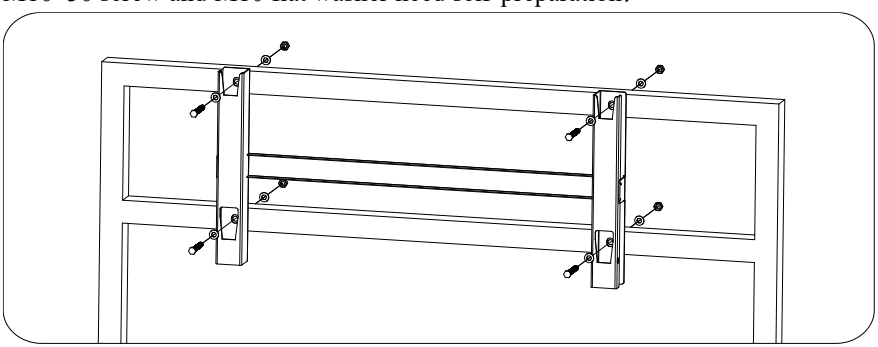

Figure 4-14 Fix wall bracket

Step 4: Lift the inverter and hang it on the wall bracket,and fixing both side of inverter with M6 screw .（repeat 4.6.1step 4）。

All copy reserved ©Shenzhen SOFARSOLAR Co., Ltd.

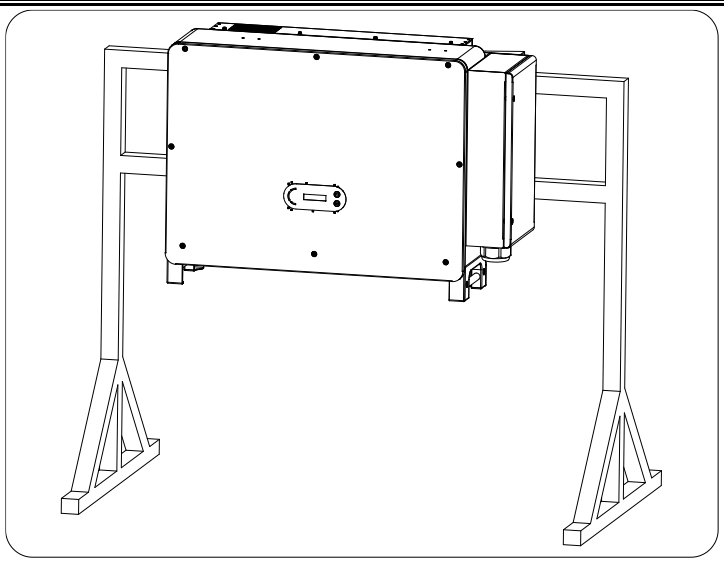

Note: If height between ground and bracket is less than 1.3m, use auxiliary handle for installation. Otherwise, use lifting equipment.

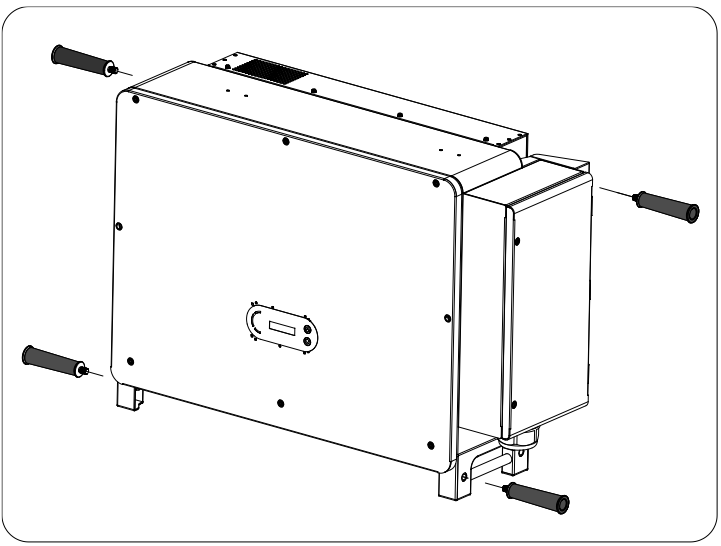

Figure 4-15 Installation position of auxiliary handle

All copy reserved ©Shenzhen SOFARSOLAR Co., Ltd.

5.Electrical Connection

Outlines of this Chapter

This section introduces the electrical connection for the product. Please read the information carefully, it may helpful to understand the grounding wiring, DC input connection, AC output connection and communication connection.

Caution:

Before performing electrical connections, ensure the DC switch is OFF and AC circuit breaker is OFF. Waiting 5 minutes for the capacitor to be electrically discharged.

 Attention	Installation and maintenance should be done by certified electrical engineer
 Danger	Before the electrical connection, use opaque material to cover the PV modules or disconnect PV string DC switch. PV arrays will produce dangerous voltage if it is exposure under sun
 Note	For this product, the open circuit voltage of PV strings should not greater 1100V

5.1 Electrical Connection

Introduce the electrical connection process.

5.2 Terminal Port

Introduce inverter terminal port layout.

5.3 Grounding Protection (PE)

Connect PE line for grounding protection.

5.4 Connect AC output（AC-Output)

Connect AC output for feeding generated electrical into the utility grid. Must meet the requirement of local utility grid company.

5.5 DC input connection

Connect PV array with inverter by DC cable.

All copy reserved ©Shenzhen SOFARSOLAR Co., Ltd.

5.6 Communication Connection

Introduce the propose WIFI/USB, COM and how to connect WIFI/USB port.

5.7 Safety check

Before operate inverter, check the PV array, inverter DC side safety connection and AC side safety connection.

5.1. Electrical Connection

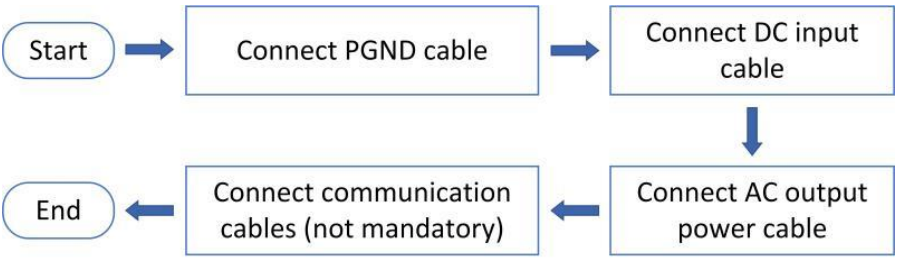

Figure 5-1flowchart for connecting cables to the inverter

5.2. Terminal Connector

Connector description as below:

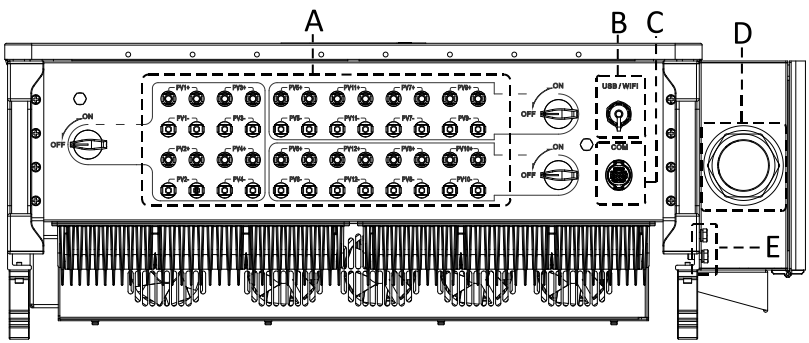

*Take picture as reference

No	Name		Description
A	DC input terminals	PVX+/PVX-	PV connector
B	USB/WIFI port	USB/WIFI	For WIFI, GPRS Communication

All copy reserved ©Shenzhen SOFARSOLAR Co., Ltd.

C	RS485 Modbus/DRMs	RS485/DRMs	RS485 Communication port/DRMs port
D	AC output terminals		AC output terminal
E	Grounding	⏚	Connecting terminal of the ground, choose at least one for grounding connection

5.3. Grounding Connection (PE)

Connect the inverter to the grounding electrode using ground cable.

Note	SOFAR 100-136kW is a transformerless inverter which requires the positive pole and negative pole of the PV array are NOT grounded. Otherwise, it will cause inverter failure. In the PV system, all non-current-carrying metal parts (such as mounting frame, combiner box enclosure, etc.) should be connected to earthed.

Preparation: prepare the grounding cable (recommend 16mm² yellow-green outdoor cable and M8 OT Terminal)

Procedure:

Step 1: Remove the insulation layer with an appropriate length using a wire stripper shown as figure 5-2.

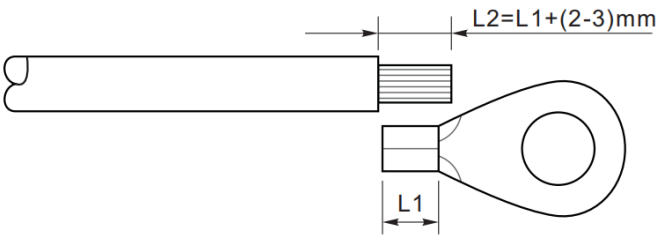

Figure 5-2 Grounding connection instruction（1）

Note：the length of L2 should 2~3mm higher than L1.

Step 2: Insert the exposed core wires into the OT terminal and crimp them by using a crimping tool, as shown as figure 5.3. Recommend using OT terminal: OT M6, Cable: ≥6mm^2.

All copy reserved ©Shenzhen SOFARSOLAR Co., Ltd.

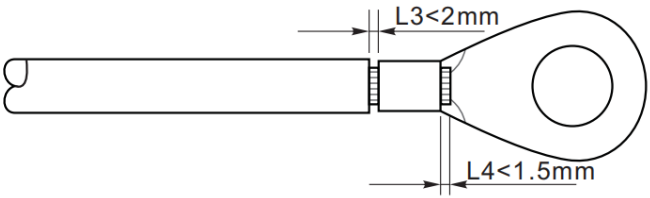

Figure 5-3 Grounding connection instruction（2）

Note 1: L3 is the length between the insulation layer of the ground cable and crimped part. L4 is the distance between the crimped part and core wires protruding from the crimped part.

Note 2: The cavity formed after crimping the conductor crimp strip shall wrap the core wires completely. The core wires shall contact the terminal closely.

Step 3: Remove the screw from the bottom side of inverter (Shown as figure 5-4), connect the grounding cable to the grounding point and tighten the grouping screw. Torque is 6-7N.m.

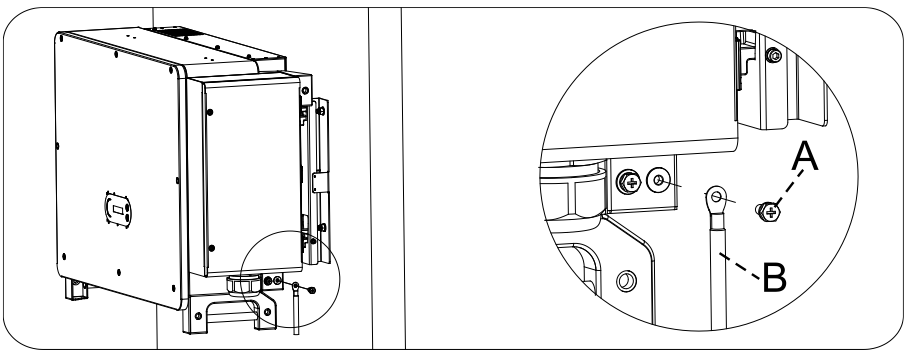

A.M8 hexagon screw B. grounding cable

Figure 5-4 Inverter external grounding instruction diagram

Note: For improving anti-corrosion performance, after ground cable installed, apply silicone or paint is preferred to protect.

5.4. Connect grid side of inverter(AC-Output)

For Belgium, one of the following links is required for external AC relay.

http://www.synergrid.be/download.cfm?fileId=C10-21_DecouplingRelays_NF_202

All copy reserved ©Shenzhen SOFARSOLAR Co., Ltd.

00515.pdf

Inverter has a standard and integrated residual current monitoring unit (RCMU), when inverter detected leakage current excess 300mA, it will cut off with utility grid for protection. For external Residual Current Device (RCD), the rated residual current shall be 300mA or higher.

Precondition:

Inverter AC side should connect a three phase circuit current to ensure inverter can be cut off with utility grid for abnormal condition.

The AC cable need to meet the requirement of local grid operator.

5.4.1 Open the wiring box

Note:

- Forbid to open then main board cover of inverter.
- Before open the wiring box, please ensure there is not DC and AC connection.
- If open the wiring box on snowing or raining day, please take protective measures to avoid the snow and rain enter wiring box. Otherwise, should not open the wiring box.
- Please do not unused screw in the wiring box.

Step 1: Use M6 driver to unscrew the two screws on the wiring box.

Step 2: Open wiring box cover.

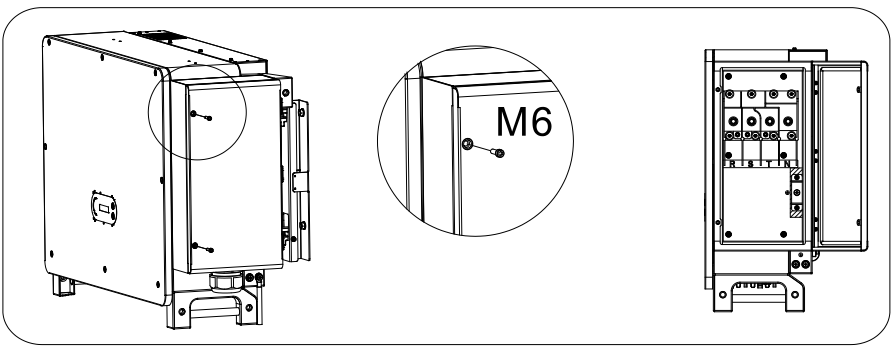

Figure 5-5 Open wiring box

5.4.2 Wiring Terminal and Precautions

All copy reserved ©Shenzhen SOFARSOLAR Co., Ltd.

Note:

- Before connect to grid, please ensure the grid voltage and frequency of local grid meet the requirement of inverter , any question please seek local grid company for help.
- Inverter can only connect to grid after get the permission from local grid company.
- Should not connect any loads between inverter and AC circuit breaker.
- OT/DT Requirement.
- When use copper core cable, please use copper terminal connector.
- When use copper clad aluminum cable, please use copper terminal connector.
- When use aluminum core cable, please use Copper and aluminum transition terminal connector or aluminum terminal connector.

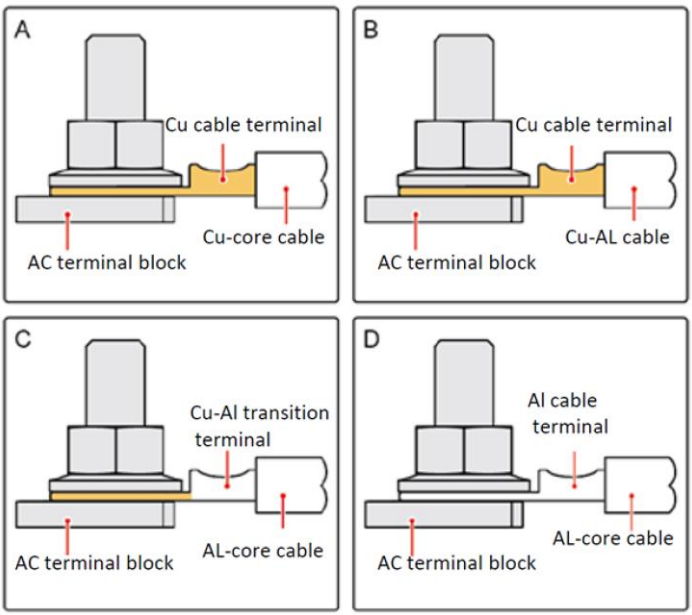

Figure 5-6 OT/DT Requirement for terminal connection

All copy reserved ©Shenzhen SOFARSOLAR Co., Ltd.

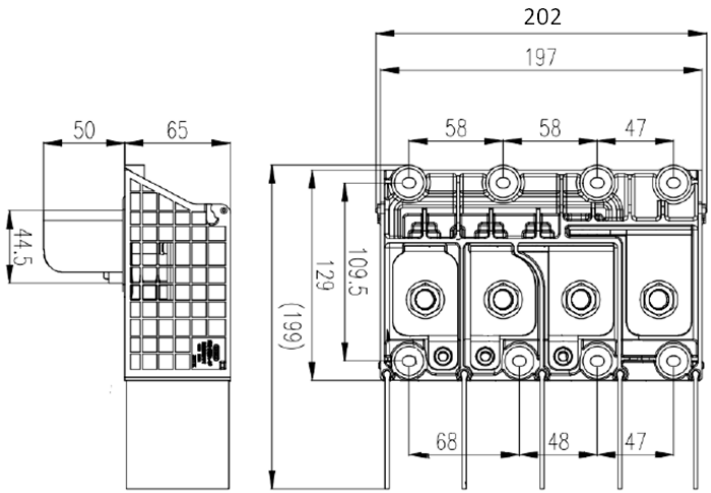

Figure 5-7 AC Terminal size

5.4.4 Wring Procedure

The section will use a five core wire as a sample, four core wire has same connection process

Figure 5-1 Recommend AC cable size

Name	Type	Area(mm²)
AC Cables	Recommended：Outdoor four-core/five-core copper or aluminum wire	Copper Wire: 95~185; Aluminum Wire: 120~240; PE Wire: reference 5.3

Step 1： Open the cover, refers to section 5.3.1.

Step 2： Turn OFF the AC circuit breaker and secure against reconnection.

Step 3： Unscrew the nut of the AC terminal block and select the sealing ring according to the outer diameter of the cable. Insert the nut, sealing ring into the cable in sequence.

Step 4： Remove the insulation layer of an appropriate length according to figure below.

All copy reserved ©Shenzhen SOFARSOLAR Co., Ltd.

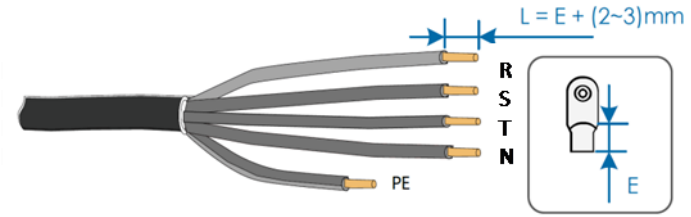

Step 5： Crimp the Terminal.

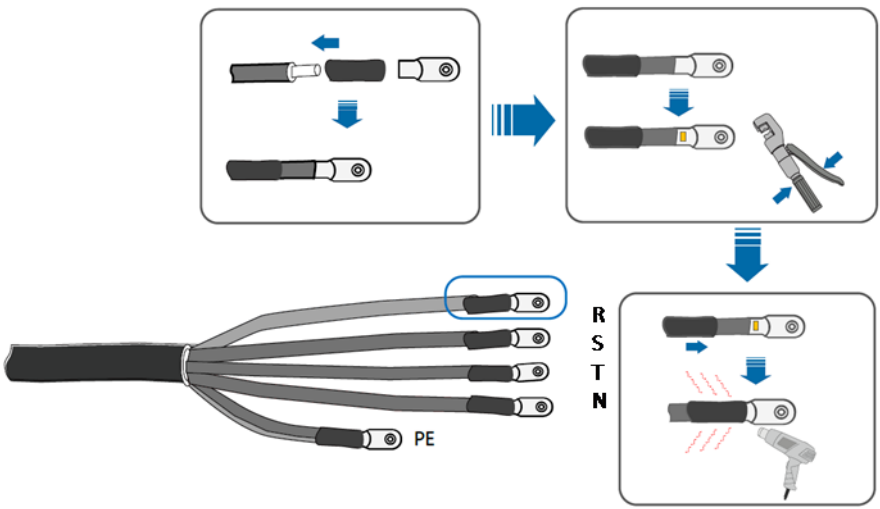

Step 6： Depending on the grid configuration, connect L1, L2, L3 and N to the terminals according to the label and tighten the screw on the terminal using a screwdriver.

All copy reserved ©Shenzhen SOFARSOLAR Co., Ltd.

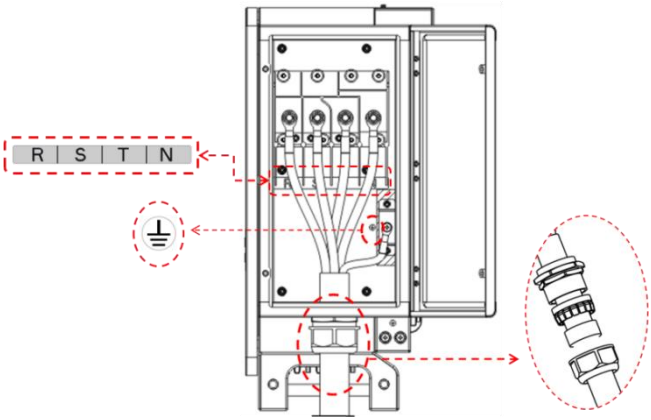

Note:

- Phase lines use M12 terminal connector, PE line use M8 terminal connector. The position of"PE"Line and "N"Line should not be opposite. Opposite position may cause inverter permanently faulty.
- As shown in the figure below ,for HV model ,the N-wire does not need to be connected.

(136KTL-HV-PRO)

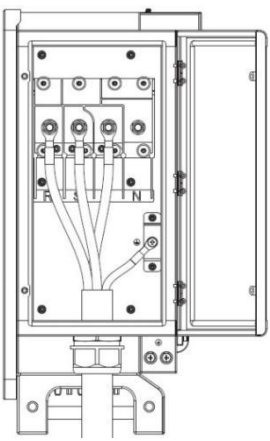

Step 7: Closed wiring box cover, and tighten the screw.

All copy reserved ©Shenzhen SOFARSOLAR Co., Ltd.

5.5. Connect PV side of inverter（DC-Input）

Note:

- Connecting PV strings into inverter must following the below procedure. Otherwise, any faulty cause by inappropriate operation will be including in the warranty case.
- Ensure the maximum short circuit current of PV strings should less than the maximum inverter DC current input. And three “DC switch” is in OFF position. Otherwise, it may cause high voltage and electric shock.
- Ensure PV array have good insulation condition in any time.
- Ensure same PV string should have the same structure, including: same model, same number of panels, same direction, same azimuth.
- Ensure PV positive connector connect to inverter positive pole, negative conenctor connect to inverter negative pole
- Please use the connectors in the accessories bag. The damage cause by incorrect is not including in the warranty.

Figure 5-2 Recommend DC cable size

Copper cable cross section area（mm^2）		Cable OD(mm)
Range	Recommend	
4.0~6.0	4.0	4.5~7.8

Step 1: Find the metal contact pins in the accessories bag, connect the cable according below diagram (1.Positive cable, 2. negative cable)；

All copy reserved ©Shenzhen SOFARSOLAR Co., Ltd.

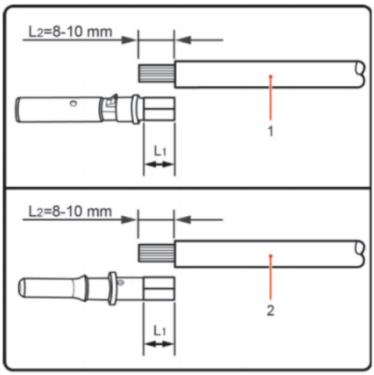

Figure 5-8 DC cable connection（1）

Step 2: Crimp the PV metal contact pin to the striped cable using a proper crimping pliers;

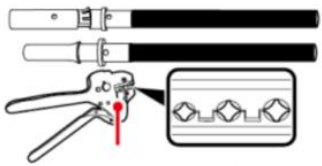

crimping tool

Step 3: Insert wire into the connector cap nut and assemble into the back of male or female plug, When you heard a “click”, the pin tact assembly is seated correctly. (3. Positive Connector, 4. negative connector);

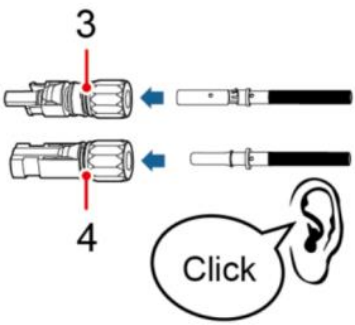

Step 4: Measure PV voltage of DC input with multimeter, verify DC input cable polar and connect DC connector with inverter until hearing a slight sound indicated connection succeed.

All copy reserved ©Shenzhen SOFARSOLAR Co., Ltd.

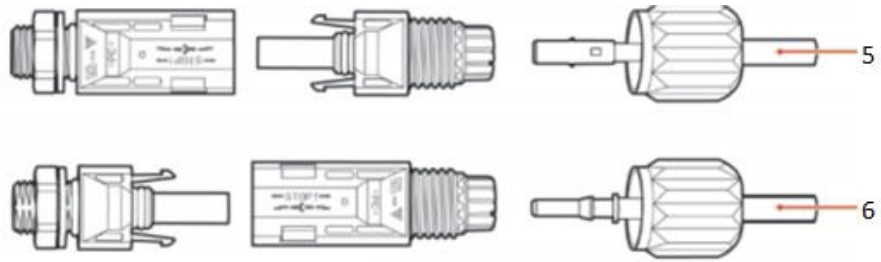

Figure 5-9DC cable connection

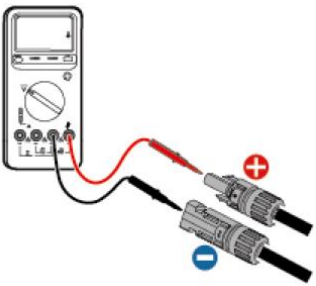

Note: Please use multimeter to make sure the PV array positive pole and negative pole!

Dealing: If need to remove the PV connector from inverter side, please use the Removal Tool as below diagram, move the connector gently.

Note	Before, moving the positive and negative connector, please make sure "DC Switch" is on OFF position.

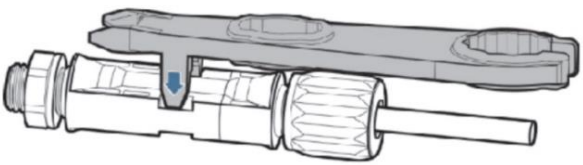

Figure 5-10 Removal DC connector

All copy reserved ©Shenzhen SOFARSOLAR Co., Ltd.

5.6. Communication Connection

Note: When layout the wiring diagram, please separate the communication wiring and power wiring in case the signal be affected.

5.6.1 USB/WIFI Port

Port Description:

USB/WIFI port	USB: USB PORT	Use for updating the software
	WIFI: WIFI PORT	Use for connect Wi-Fi/GPRS/Ethernet for data transmission

Procedure:

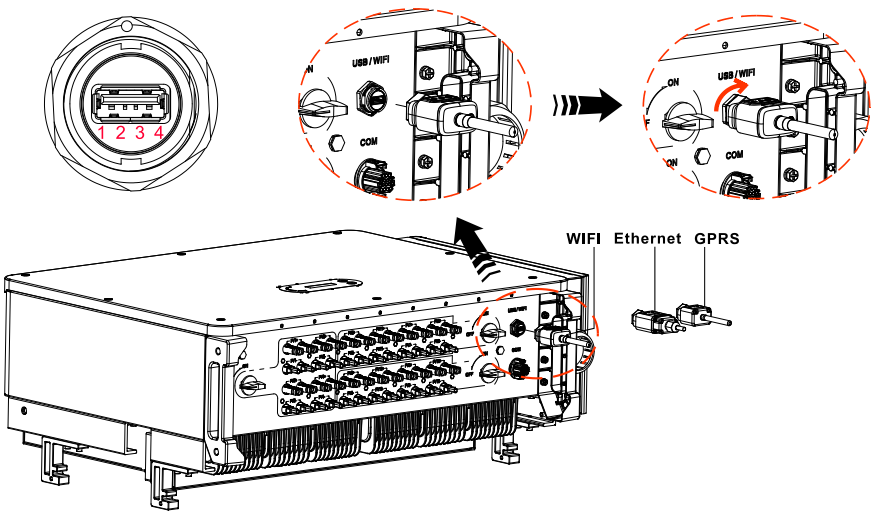

WIFI/GPRS/Ethernet

By the USB acquisition stick (WIFI/GPRS/Ethernet), transfer the inverter power output information, alarm information, operation state to the PC terminal or local data acquisition device, then uploaded to the server. Register remote monitoring of

All copy reserved ©Shenzhen SOFARSOLAR Co., Ltd.

SOFAR 100-136KTL-PRO at its relevant website or APP according to monitoring device SN.

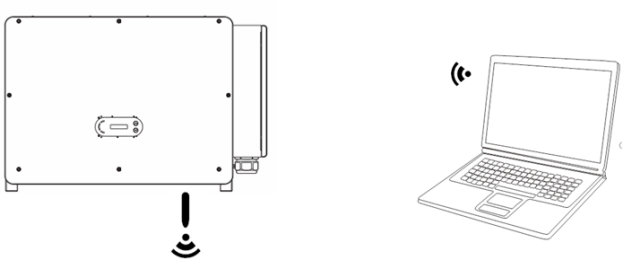

Figure 4-20 Connect one USB acquisition stick (WIFI version) to wireless router

5.6.2 COM—Multi function communication port

Figure 5-3 Recommend com cable size

Name	Type	Outer diameter(mm)	Area(mm²)
RS485 Communication Wire	Outdoor shielded twisted pair meets local standards	3core：4~8	0.25~1

Port Description：

PIN	Define	Function	Note
1	RS485A	RS485 signal+	Wire connection monitoring or multiple inverter monitoring
2	RS485A	RS485 signal+	
3	RS485B	RS485 signal-	
4	RS485B	RS485 signal-	
5	Electric meter RS485A	Electric meter RS485 signal+	Wire connection Electric meter
6	Electric meter RS485B	Electric meter RS485 signal-	
7	GND.S	RS485 signal ground	
8	DRM0	Remote shunt down	DRMS port
9	DRM1/5		
10	DRM2/6		
11	DRM3/7		
12	DRM4/8		
13	GND.S	Communication	

All copy reserved ©Shenzhen SOFARSOLAR Co., Ltd.

		Ground	
14-16	Blank PIN	N/A	N/A

Procedure:

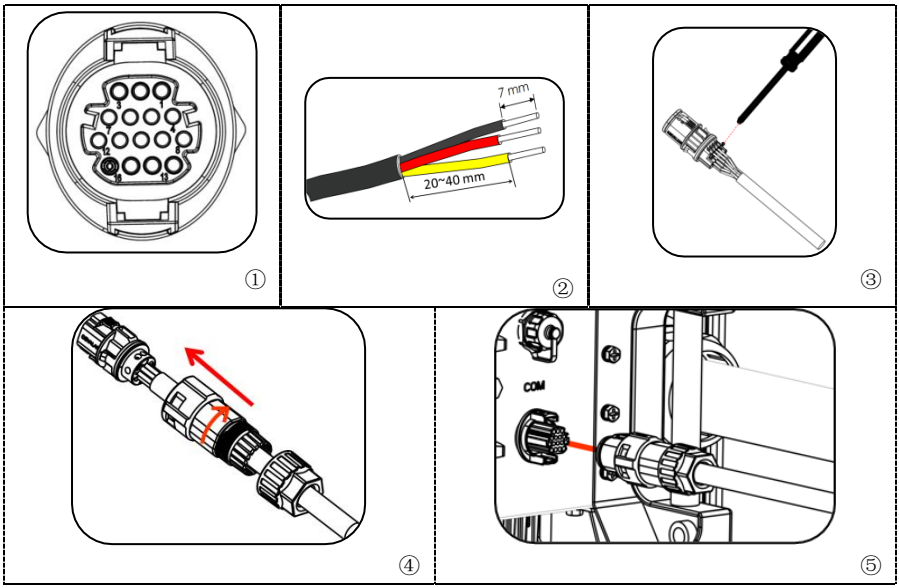

Communications Port Description

Logic interface

(a) Logic interface for AS/NZS 4777.2:2020, also known as inverter demand response modes (DRMs).

The inverter will detect and initiate a response to all supported demand response commands within 2 s. The inverter will continue to respond while the mode remains asserted.

Table 4-3 Function description of the DRMs terminal

Pin NO.	Function
8	DRM0
9	DRM1/5
10	DRM2/6
11	DRM3/7
12	DRM4/8

All copy reserved ©Shenzhen SOFARSOLAR Co., Ltd.

13	GND

NOTE: Supported DRM command: DRM0, DRM5, DRM6, DRM7, DRM8.

(b) Logic interface for VDE-AR-N 4105:2018-11, is in order to control and/or limit the inverter's output power.

The inverter can be connected to a RRCR (Radio Ripple Control Receiver) in order to dynamically limit the output power of all the inverters in the installation.

Figure 4-14 Inverter – RRCR Connection

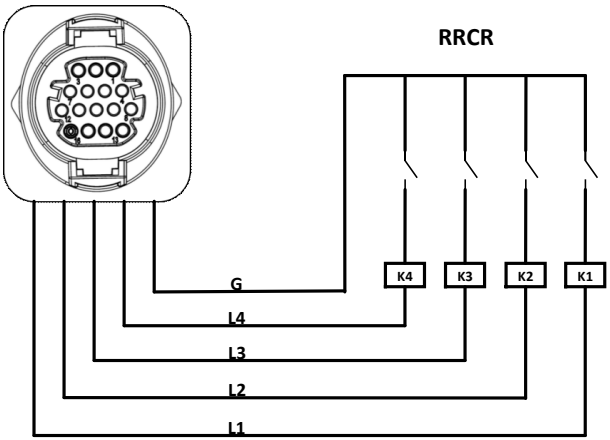

Table 4-4 Function description of the terminal

Pin NO.	Pin name	Description	Connected to (RRCR)
9	L1	Relay contact 1 input	K1 - Relay 1 output
10	L2	Relay contact 2 input	K2 - Relay 2 output
11	L3	Relay contact 3 input	K3 - Relay 3 output
12	L4	Relay contact 4 input	K4 - Relay 4 output
13	G	GND	Relays common node

Table 4-5 The inverter is preconfigured to the following RRCR power levels

Relay status: close is 1, open is 0

L1	L2	L3	L4	Active Power	cos(ϕ)
1	0	0	0	0%	1
0	1	0	0	30%	1
0	0	1	0	60%	1
0	0	0	1	100%	1

All copy reserved ©Shenzhen SOFARSOLAR Co., Ltd.

(c) Logic interface for EN50549-1:2019, is in order to cease active power output within five seconds following an instruction being received at the input interface.

Figure 4-15 Inverter – RRCR Connection

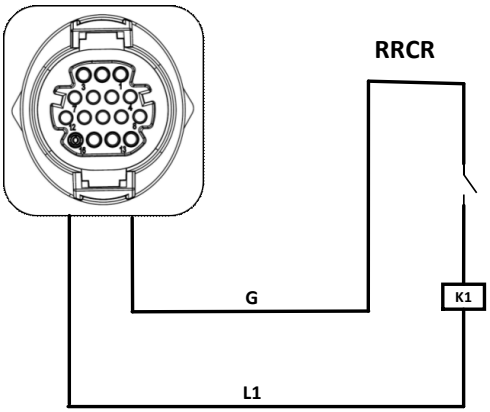

Table 4-6 Function description of the terminal

Pin NO.	Pin name	Description	Connected to (RRCR)
9	L1	Relay contact 1 input	K1 - Relay 1 output
13	G	GND	K1 - Relay 1 output

Table 4-7 The inverter is preconfigured to the following RRCR power levels.

Relay status: close is 1, open is 0

L1	Active Power	Power drop rate	Cos(ϕ)
1	0%	＜5 seconds	1
0	100%	/	1

RS485

By RS485 interface, transfer the inverter power output information, alarm information, operation state to the PC terminal or local data acquisition device, then uploaded to the server.

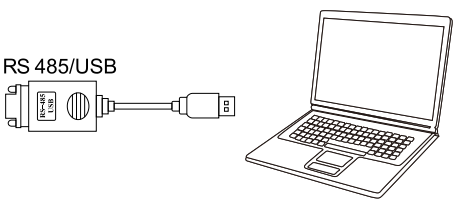

All copy reserved ©Shenzhen SOFARSOLAR Co., Ltd.

Figure 5-11 Picture of the RS485/USB converter and PC terminal

If only one SOFAR 100-110KTL-PRO is used, use a communication cable, refer to **section 5.6.2** for COM pin definition, and choose either of the two RS485 ports.

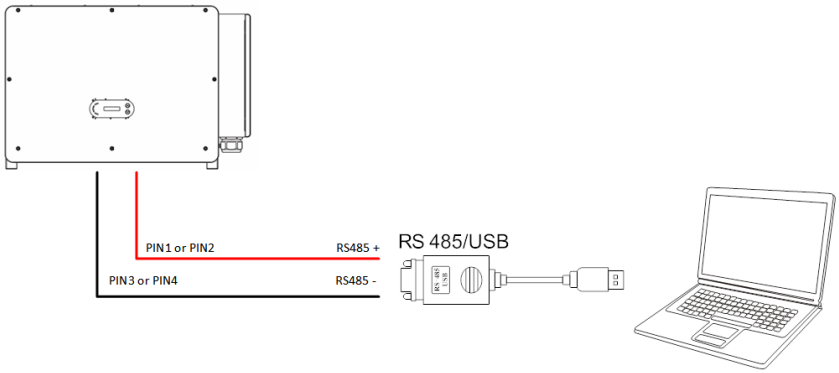

Figure 5-12 A single SOFAR 100-110KTL-PRO connecting communications

Note	● The length of the RS485 communication cable should be less than 1000 m. ● The length of the WIFI communication cable should be less than 100 m.

All copy reserved ©Shenzhen SOFARSOLAR Co., Ltd.

6.Commissioning of inverter

Outlines this Chapter

Introduce SOFAR 100-110KTL-PRO safety inspection and start processing

6.1. Cable Connection Inspection



Attention

For first time operation, check the AC voltage and DC voltage are within the acceptable range

AC grid connection

Use multimeter to confirm that three lines and PE line are connect correctly. DC pv connection.

Use multimeter to confirm that positive pole and negative pole of PV strings, and the Voc of each string is lower than the inverter max DC input.

6.2. Start Inverter

Step 1: Turn ON the DC switch.

Step 2: Turn ON the AC circuit breaker.

When the DC power generated by the solar array is enough, the SOFAR 100-136KTL-PROinverter will start automatically. Screen showing“normal”indicates correct operation.

NOTE 1: Choose the correct country code. (refer to section 7.3 of this manual)

NOTE 2: Different distribution network operators in different countries have different requirements regarding grid connections of PV grid connected inverters.

Therefore, it's very important to make sure that you have selected the correct country code according to requirements of local authority.Please consult qualified electrical engineer or personnel from electrical safety authorities about this.

Shenzhen SOFARSOLAR Co., Ltd. is not responsible for any consequences arising

All copy reserved ©Shenzhen SOFARSOLAR Co., Ltd.

out of incorrect country code selection.

If the inverter indicates any fault, please refer to Section 8.1 of this manual —— trouble shooting for help.

All copy reserved ©Shenzhen SOFARSOLAR Co., Ltd.

7.Operation interface

Outlines of this chapter

This section introduces the display, operation, buttons and LED indicator lights of SOFAR 100-136KTL-PRO Inverter.

7.1. Operation and Display Panel

Buttons and Indicator lights



Button:

"^" Short press UP button = go up

"^" Long press UP button = exit current interface

"v" Short press DOWN button = go down

"v" Long press DOWN button = enter current interface

Indicator Lights:

"GFI" Red light ON = GFCI faulty

"Normal" Green light flashing = counting down or checking

"Normal" Green light ON = Normal

"Alarm" Red light ON= recoverable or unrecoverable faulty

All copy reserved ©Shenzhen SOFARSOLAR Co., Ltd.

7.2. Standard Interface

LCD interface indicated inverter status, alarm information, communication connection, PV input current and voltage, grid voltage,current and frequency, today generation, total generation.

Inverter working status, PV 1 -12 PV input voltage and current



Inverter working status, PV generated power

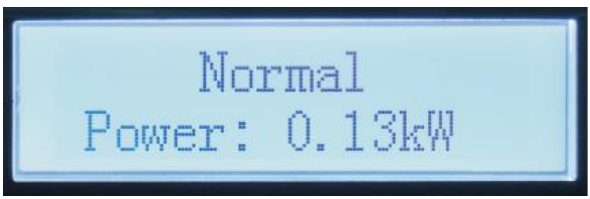

Inverter working status, today generated electricity



Inverter working status, total generated electricity

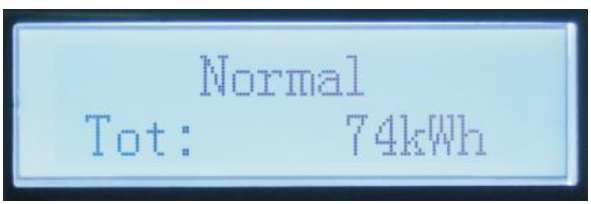

Inverter working status, grid voltage and current

All copy reserved ©Shenzhen SOFARSOLAR Co., Ltd.

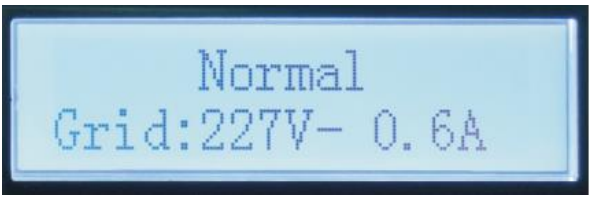

Inverter working status, grid voltage and frequency



Inverter working status, Wi-Fi/ RS485 status



Inverter faulty alarm



When power turn on, LCD interface displays INITIALIZING, refer below picture.



When control board successfully connected with communication board, the LCD display the current state of the inverter， display as shown in the figure below.

All copy reserved ©Shenzhen SOFARSOLAR Co., Ltd.

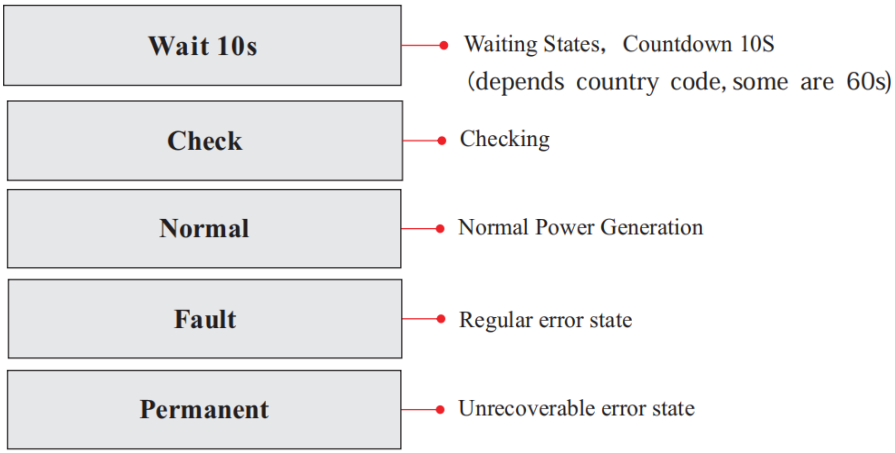

Inverter states includes: wait, check, normal, fault and permanent

Wait: Inverter is waiting to Check State when reconnect the system. In this state, grid voltage value is between the max and min limits and so on; If not, Inverter will go to Fault State or Permanent State.

Check: Inverter is checking isolation resistor, relays, and other safety requirements. It also does self-test to ensure inverter software and hardware are well functional. Inverter will go to Fault State or Permanent State if any error or fault occurs.

Normal: Inverter enter to Normal State，it is feeding power to the grid; inverter will go to Fault State or Permanent state if any error or fault occurs.

Fault: Fault State: Inverter has encountered recoverable error. It should recover if the errors disappear. If Fault State continues; please check the inverter according error code.

Permanent: Inverter has encountered unrecoverable error, we need maintainer debug this kind of error according to error code.

When the control board and communication board connection fails, the LCD display interface as shown in the figure below.



All copy reserved ©Shenzhen SOFARSOLAR Co., Ltd.

7.3. Main Interface

Long press the down button under standard interface to enter into main interface, Main interface including below information:

Normal	---------Long press DOWN button
	1.Enter Setting
	2.Event List
	3.SystemInfo
	4.Display Time
	5.Software Update

(A)Enter setting Interface as below:

1.Enter Setting	--------Long press DOWN button	
	1.Set time	**8.Set Input mode**
	2.Clear Energy	**9.Set Language**
	3.Clear Events	**10.Set RefluxP**
	4.Country Country	**11.Logic Interface**
	5.On-Off Control	**12.IV Curve Scan**
	6.Set Energy	**13.PID**
	7.Set Address	

Long press the button to Enter the main interface of "1.Enter Setting" and long press to enter the setting menu. You can select the content you want to set by short pressing the button.

Note1: Some settings need to enter the password (the default password is 0001), when entering the password, short press to change the number, long press to confirm the current number, and long press after entering the correct password.If "password error, try again" appears, you will need to re-enter the correct password.

1. Set Time

Set the system time for the inverter.

2. Clear Energy

Clean the inverter of the total power generation.

3. Clear Events

All copy reserved ©Shenzhen SOFARSOLAR Co., Ltd.

Clean up the historical events recorded in the inverter.

4. Country Country

Long press button, enter interface, save the specific file into USB and insert USB into inverter communication port.

5. On-Off Control

Inverter on-off local control.

6. Set Energy

Set the total power generation. You can modify the total power generation through this option.

7. Set address

Set the address (when you need to monitor multiple inverters simultaneously), Default 01.

8. Set Input mode

SOFAR 100-136KTL-PRO has 10/12 MPPTs, these MPPTs can work interdependently, or divided into parallel mode. User can change the setting according to the configuration.

9. Set Language

Set the inverter display language.

10. Set RefluxP

Long-press the down button to enter the RefluxP enable selection interface (enter the default password: 0001), and then Long-press the down button to enter the reverse-current power setting interface, and you can enter the reverse-current power percentage. Long press the up button to exit the setting interface

The reflux power value set by the anti-reflux function is the maximum power value allowed to be transmitted to the grid.

11. Logic interface

Enable or disable logical interfaces. It is use for below standard Australia (AS4777), Europe General (50549), German(4105).

12. IV Curve Scan

All copy reserved ©Shenzhen SOFARSOLAR Co., Ltd.

Shadow scanning, when the component is blocked or abnormal, causing multiple power peaks, by enabling this function, the peak point of maximum power can be tracked.

13. PID

Enable or disable PID function. When the PID module is enabled(enter the default password: 0001),it will work between 0 a.m. and 4 a.m.

（B）Event List：

Event List is used to display the real-time event records, including the total number of events and each specific ID No. and happening time. User can enter Event List interface through main interface to check details of real-time event records, Event will be listed by the happening time, and recent events will be listed in the front. Please refer to below picture. Long press the button and short press the button to turn the page in standard interface, then enter into “2.Event List” interface.

2. Event List	
1. Current event	2. History event
Fault information	001 ID04 06150825 (Display the event sequence number, event ID number, and event occurrence time)

(A) **“SystemInfo” Interface as below**

3.SystemInfo	------Long press DOWN button	
	1.Inverter Type	**7.Input Mode**
	2.Serial Number	**8.Remote State**
	3.General Soft Version	**9.Reflux Power**
	4.General Hard Version	**10.DRMs0**
	5.Country	**11.DRMn**
	6.Modbus Address	**12.IV Curve Scan**

The user enters the main menu by long pressing the DOWN button, short press and turns the page to select menu contents, then long press the button to enter "3. SystemInfo". Turning the page down can select the system information to view.

(B) Display Time

Long press the button and short press the button to turn the page in the standard user interface to enter into “4.Display Time”,then long press the button to display the

All copy reserved ©Shenzhen SOFARSOLAR Co., Ltd.

current system time.

(C) Software Update

User can update software by USB flash drive , SOFARSOLAR will provide the new update software called firmware for userif it is necessary,The user needs to copy the upgrade file to the USB flash drive.

7.4. Updating Inverter Software

SOFAR 100-136KTL-PRO inverter offer software upgrade via USB flash drive to maximizeinverter performance and avoid inverter operation error caused by software bugs.

Step 1: Turn off AC circuit breaker and DC switch, remove the communication board cover as below figure. If the RS485 line has been connected, please release the waterproof nut first and make sure the communication line is no longer the force. Then remove the waterproof cover.

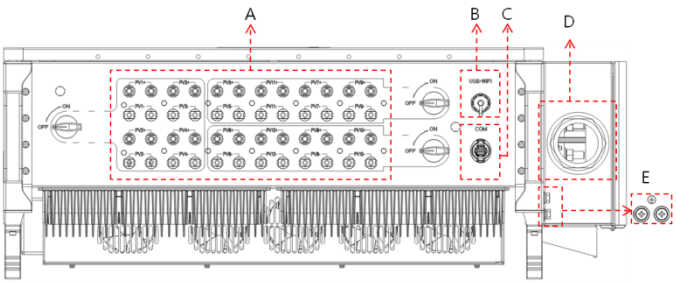

Figure 7-1Remove communication broad cover

Step 2: Insert USB into computer;

Step 3: SOFARSOLAR service team will send the software code to user, After user receive the file, please decompressing file and cover the original file in USB flash drive.

Step 4: Insert USB drive into the USB port of inverter;

Step 5: Then turn on DC switch and enter into the online upgrade to the main menu"5.Software Update"in the LCD display program[6.3(E)].The method to enter the menu can refer to operation interface of LCD.

All copy reserved ©Shenzhen SOFARSOLAR Co., Ltd.

Step 6: Input the password,if password is correct,and then begin the update process,the original password is 0715.

Step 7: System update main DSP, slave DSP and ARM in turns.If main DSP update success,the LCD will display"Update DSP1 Success", otherwise display "Update DSP1 Fail";If slave DSP update success,the LCD will display"Update DSP2 Success",otherwise display "UpdateDSP2 Fail".

Step 8: If Fail,please turn off the DC switch, wait for the LCD screen turn off, then turn on the DC switch again,then Continue to update from step 5.

Step 9: After the update is completed,turn off the DC breaker, wait for the LCD screen extinguish,then recover the communication waterproof and then turn on the DC breaker and AC breaker again,the inverter will enters the running state. User can check the current software version in Systemlnfo>>3.SoftVersion.

All copy reserved ©Shenzhen SOFARSOLAR Co., Ltd.

8. Trouble shooting and maintenance

8.1. Troubleshooting

This section describes the potential errors for this product. Please read carefully for the following tips when doing the troubleshooting:

1) Check the warning message or faulty codes on the inverter information panel

2) If not any error code display on the panel, please check the following lists:

— Is inverter be installed in a clean, dry, ventilated environment?

— Is the DC switch turn off?

— Are the cable cross section area and length meet the requirement?

— Are the input and output connection and wiring in good condition?

— Are the configuration settings correctly for the particular installation?

This section contains the potential errors, resolution steps, and provide users with troubleshooting methods and tips

The process to check the event list can refers to Manual Chapter 7.3 (B)

Figure 8-1 Even list

Code	Name	Description	Solution
ID001	GridOVP	The grid voltage is too high	If the alarm occurs occasionally, the possible cause is that the electric grid is abnormal occasionally. Inverter will automatically return to normal operating status when the electric grid's back to normal. If the alarm occurs frequently, check whether the grid voltage/frequency is within the acceptable range. If yes, please check the AC circuit breaker and AC wiring of the inverter. If the grid voltage/frequency is NOT within the acceptable range and AC wiring is correct, but the alarm occurs repeatedly, contact technical support to change the grid over-voltage, under-voltage, over-frequency, under-frequency protection points
ID002	GridUVP	The grid voltage is too low	
ID003	GridOFP	The grid frequency is too high	
ID004	GridUFP	The grid frequency is too low	

All copy reserved ©Shenzhen SOFARSOLAR Co., Ltd.

			after obtaining approval from the local electrical grid operator.
ID005	GFCI	Charge Leakage Fault	Check for inverter and wiring.
ID006	OVRT	OVRT function is faulty	If the alarm occurs occasionally, the possible cause is that the electric grid is abnormal occasionally. Inverter will automatically return to normal operating status when the electric grid's back to normal. If the alarm occurs frequently, check whether the grid voltage/frequency is within the acceptable range. If yes, please check the AC circuit breaker and AC wiring of the inverter. If the grid voltage/frequency is NOT within the acceptable range and AC wiring is correct, but the alarm occurs repeatedly, contact technical support to change the grid over-voltage, under-voltage, over-frequency, under-frequency protection points after obtaining approval from the local electrical grid operator.
ID007	LVRT	LVRT function is faulty	
ID008	IslandFault	Island protection error	
ID009	GridOVPInstant1	Transient overvoltage of grid voltage 1	
ID010	GridOVPInstant2	Transient overvoltage of grid voltage 2	
ID011	VGridLineFault	Power grid line voltage error	
ID012	InvVoltFault	Inverter voltage error	Internal faults of inverter, switch OFF inverter, wait for 5 minutes, then switch ON inverter. Check whether the problem is solved. If no, please contact technical support.
ID017	HwADErrIGrid	Power grid current sampling error	
ID018	HwADErrDCI(AC)	Wrong sampling of dc component of grid current	
ID019	HwADErrVGrid(DC)	Power grid voltage sampling error (DC)	
ID020	HwADErrVGrid(AC)	Power grid voltage sampling error (AC)	
ID021	HwGFCIFault(DC)	Leakage current sampling error(DC)	
ID022	HwGFCIFault(AC)	Leakage current sampling error(AC)	
ID024	HwADErrIdc	Dc input current sampling error	
ID025	HwADErrDCI(DC)	\	
ID026	HwADErrIdc Branch	\	
ID029	ConsistentGFCI	Leakage current consistency error	
ID030	ConsistentVg	Grid voltage	

All copy reserved ©Shenzhen SOFARSOLAR Co., Ltd.

	rid	consistency error	
ID031	ConsistentDCI	DCI consistency error	
ID033	SpiCommFault(DC)	SPI communication error (DC)	
ID034	SpiCommFault(AC)	SPI communication error (AC)	
ID035	SChip_Fault	Chip error (DC)	
ID036	MChip_Fault	Chip error (AC)	
ID037	HwAuxPowerFault	Auxiliary power error	
ID041	RelayFail	Relay detection failure	
ID042	IsoFault	Low insulation impedance	Check the insulation resistance between the photovoltaic array and ground (ground), if there is a short circuit, the fault should be repaired in time.
ID043	PEConnectFault	Ground fault	Check ac output PE wire for grounding.
ID044	PvConfigError	Error setting input mode	Check the input mode (parallel/independent mode) Settings for the inverter. If not, change the input mode.
ID050	TempErrHeatSink1	Radiator 1 temperature protection	For Inner BMS battery, make sure that the battery NTC cable is properly connected. Make sure the inverter is installed where there is no direct sunlight. Please ensure that the inverter is installed in a cool/well ventilated place. Ensure the inverter is installed vertically and the ambient temperature is below the inverter temper ature limit.
ID051	TempErrHeatSink2	Radiator 2 temperature protection	
ID052	TTempErrHeatSink3	Radiator 3 temperature protection	
ID053	TempErrHeatSink4	Radiator 4 temperature protection	
ID054	TempErrHeatSink5	Radiator 5 temperature protection	
ID055	TempErrHeatSink6	Radiator 6 temperature protection	
ID057	TempErrEnv1	Ambient temperature 1 protection	
ID058	TempErrEnv2	Ambient temperature 2 protection	

All copy reserved ©Shenzhen SOFARSOLAR Co., Ltd.

ID059	TempErrInv1	Module 1 temperature protection	
ID060	TempErrInv2	Module 2 temperature protection	
ID061	TempErrInv3	Module 3 temperature protection	
ID062	TempDiffErrInv	Inverter Module Temperature Difference is too large	
ID065	BusRmsUnbalance	Unbalanced bus voltage RMS	Internal faults of inverter, switch OFF inverter, wait for 5 minutes, then switch ON inverter. Check whether the problem is solved. If no, please contact technical support.
ID066	BusInstUnbalance	The transient value of bus voltage is unbalanced	
ID068	BusZVP	Bus voltage low	
ID069	PVOVP	PV over-voltage	Check whether the PV series voltage (Voc) is higher than the maximum input voltage of the inverter. If so, adjust the number of PV modules in series and reduce the PV series voltage to fit the input voltage range of the inverter. After correction, the inverter will automatically return to its normal state.
ID071	LLCBusOVP	LLC BUS overvoltage protection	Internal faults of inverter, switch OFF inverter, wait for 5 minutes, then switch ON inverter. Check whether the problem is solved. If no, please contact technical support.
ID072	SwBusRmsOVP	Inverter bus voltage RMS software overvoltage	
ID073	SwBusIOVP	Inverter bus voltage instantaneous value software overvoltage	
ID082	DciOCP	Dci overcurrent protection	
ID083	SwIOCP	Output instantaneous current protection	
ID084	SwBuckBoostOCP	BuckBoost software flow	
ID085	SwAcRmsOCP	Output effective value current protection	
ID086	SwPvOCPIns	PV overcurrent	

All copy reserved ©Shenzhen SOFARSOLAR Co., Ltd.

	tant	software protection	
ID087	IpvUnbalance	PV flows in uneven parallel	
ID088	IacUnbalance	Unbalanced output current	
ID091	SwAcCBCFault	Software AC Over Current Protection	
ID098	HwBusOVP	Inverter bus hardware overvoltage	
ID099	HwBuckBoostOCP	BuckBoosthardware overflows	
ID102	HwPVOCP	PV hardware overflows	
ID103	HwACOCP	Ac output hardware overflows	
ID105	MeterCommFault	Meters communication fault	Check whether the meters wiring is correct.
ID113	OverTempDerating	Internal temperature is too high.	Make sure the inverter is installed where there is no direct sunlight. Please ensure that the inverter is installed in a cool/well ventilated place. Ensure the inverter is installed vertically and the ambient temperature is below the inverter temperature limit.
ID114	FreqDerating	AC frequency is too high	Please make sure the grid frequency and voltage is within the acceptable range.
ID115	FreqLoading	AC frequency is too low	
ID116	VoltDerating	AC voltage is too high	
ID117	VoltLoading	AC voltage is too low	
ID129	PermHwAcOCP	Output hardware overcurrent permanent failure	Internal faults of inverter, switch OFF inverter, wait for 5 minutes, then switch ON inverter. Check whether the problem is solved. If no, please contact technical support.
ID130	PermBusOVP	Permanent Bus overvoltage failure	
ID131	PermHwBusOVP	Permanent Bus hardware overvoltage failure	
ID132	PermIpvUnbalance	PV uneven flow permanent failure	
ID134	PermAcOCPInstant	Output transient overcurrent	

All copy reserved ©Shenzhen SOFARSOLAR Co., Ltd.

		permanent failure	
ID135	PermIacUnbalance	Permanent failure of unbalanced output current	
ID137	PermInCfgError	Input mode setting error permanent failure	Check the PV input mode (parallel/independent mode) Settings for the inverter. If not, change the PV input mode.
ID138	PermDCOCPInstant	Input overcurrent permanent fault	
ID139	PermHwDCOCP	Input hardware overcurrent permanent failure	Internal faults of inverter, switch OFF inverter, wait for 5 minutes, then switch ON inverter. Check whether the problem is solved. If no, please contact technical support.
ID140	PermRelayFail	Permanent relay failure	
ID141	PermBusUnbalance	Bus voltage unbalanced permanent failure	
ID142	PermSpdFail(DC)	PV surge protection	
ID143	PermSpdFail(AC)	Grid surge protection	
ID145	USBFault	USB fault	Check the USB port of the inverter
ID146	WifiFault	Wifi fault	Check the Wifi port of the inverter
ID147	BluetoothFault	Bluetooth fault	Check the bluetooth connection of the inverter
ID148	RTCFault	RTC clock failure	Internal faults of inverter, switch OFF inverter, wait for 5 minutes, then switch ON inverter. Check whether the problem is solved. If no, please contact technical support.
ID149	CommEEPROMFault	Communication board EEPROM error	
ID150	FlashFault	Communication board FLASH error	
ID152	SafetyVerFault	The software version is inconsistent with the safety version	
ID153	SCILose(DC)	SCI communication error (DC)	
ID154	SCILose (AC)	SCI communication error (AC)	
ID155	SCILose (Fuse)	SCI communication error (Fuse)	
ID156	SoftVerError	Inconsistent software versions	Contact for technical support and software upgrades.
ID161	ForceShutdown	Force shutdown	The inverter is performed a forced shutdown
ID162	RemoteShutd	Remote shutdown	The inverter is performed a remote shutdown.

All copy reserved ©Shenzhen SOFARSOLAR Co., Ltd.

	own		
ID163	Drms0Shutdown	Drms0 shutdown	The inverter is performed with a Drms0 shutdown.
ID165	RemoteDerating	Remote derating	The inverter is performed for remote load reduction.
ID166	LogicIfDerating	Logic interface derating	The inverter is loaded by the execution logic interface.
ID167	AlarmAntiReflux	Anti refluxderating	The inverter is implemented to prevent countercurrent load drop.
ID169	FanFault1	Fan 1 fault	Please check whether the fan 1 of inverter is running normally.
ID170	FanFault2	Fan 2fault	Please check whether the fan 2 of inverter is running normally.
ID171	FanFault3	Fan 3 fault	Please check whether the fan 3 of inverter is running normally.
ID172	FanFault4	Fan 4 fault	Please check whether the fan 4 of inverter is running normally.
ID173	FanFault5	Fan 5 fault	Please check whether the fan 5 of inverter is running normally.
ID174	FanFault6	Fan 6 fault	Please check whether the fan 6 of inverter is running normally.
ID175	FanFault7	Fan 7 fault	Please check whether the fan 7 of inverter is running normally.
ID176	MeterCommLose	Meters communication fault	Check whether the meters wiring is correct.
ID189	AFCICommLose	AFCI module communication is lost	Check whether the meters wiring is correct
ID190	DCArcingAlarm	Dc arc fault	
ID191	PID_Output_Fail	PID function is failed	
ID192	PLC_Com_Fail	PLC communication is lost	Check whether the meters wiring is correct

8.2. Maintenance

Inverters generally do not need any daily or routine maintenance. But ensure heat sink should not be blocked by dust, dirt or any other items.Before the cleaning, make sure that the DC SWITCH is turned OFF and the circuit breaker between inverter and electrical grid is turned OFF. Wait at least for 5 minutes before the

All copy reserved ©Shenzhen SOFARSOLAR Co., Ltd.

Cleaning.

✧ **Inverter cleaning**

Please clean the inverter with an air blower, a dry & soft cloth or a soft bristle brush. Do NOT clean the inverter with water, corrosive chemicals, detergent, etc.

✧ **Heat sink cleaning**

For the long-term proper operation of inverters, ensure there is enough space around the heat sink for ventilation, check the heat sink for blockage (dust, snow, etc.) and clean them if they exist. Please clean the heat sink with an air blower, a dry & soft cloth or a soft bristle brush. Do NOT clean the heat sink with water, corrosive chemicals, detergent, etc.

8.3. PID Recovery

When the inverter is running, the PID function module increases the potential between the negative pole of the photovoltaic array and the ground to a positive value to suppress the PID effect.

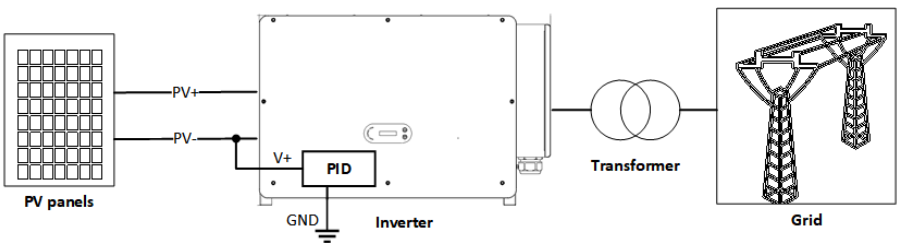

Note

1. Before enabling the PID recovery function, ensure that the polarity of the pv module's ground voltage meets requirements. If in doubt, please contact the pv module manufacturer or read their corresponding user manual.
2. If the voltage scheme of the PID protection/recovery function does not meet the requirements of the corresponding PV module, the PID function cannot work properly or may even damage the PV module.
3. Before enabling the reverse PID function, ensure that the inverter has been applied to the IT system.

All copy reserved ©Shenzhen SOFARSOLAR Co., Ltd.

4. When the inverter is not running, the PID module will apply reverse voltage to the photovoltaic module to restore the degraded module.
5. If the PID recovery function is enabled, the PID works only at night.
6. After the PID recovery function is enabled, the PV series voltage to ground is 500Vdc by default. You can change the default value through the App.

All copy reserved ©Shenzhen SOFARSOLAR Co., Ltd.

9. Technical Data

Outlines of this Chapter

This topic lists the technical specifications for SOFAR 100-136KTL-PRO inverter

9.1. Parameter table

Datasheet	SOFAR 100KTL-PRO	SOFAR 110KTL-PRO	SOFAR 136KTL-HV-PRO
Input (DC)			
Max. input voltage	1100V		
Rated input voltage	625V		785V
Start-up voltage	200V		
MPPT operating voltage range	180~1000V		
Full power MPPT voltage range	550-850V		550V-850V
Number of MPP trackers	10		12
Number for DC inputs	20		24
Max. input MPPT current	32A		32A
Max. input short circuit current	50A		50A
Output(AC)			
Rated output power	100kW	110kW	136kW
Max. apparent power	110kVA	121kVA	150kVA
Max. output current	160A	175A	160A

All copy reserved ©Shenzhen SOFARSOLAR Co., Ltd.

Rated output voltage	3/N/PE,230/400Vac		3/PE,540Vac
Output voltage range	310Vac-480Vac		432Vac-621Vac
Rated frequency	50/60Hz		
Output frequency range	45Hz-55Hz/55Hz-65Hz		
Active power adjustable range	0~100%		
THDi	<3%		
Power factor	1 (+/-0.8 adjustable)		
Efficiency			
Max. efficiency	98.70%	98.75%	99.00%
European efficiency	98.30%		98.51%
General Data			
Dimension(W×H×D)	995.5×663.5×368mm		
Weight	90kg		92kg

All copy reserved ©Shenzhen SOFARSOLAR Co., Ltd.

10. Quality Assurance

Standard warranty period

The standard warranty period of inverter is 60 months (5 years).There are two calculation methods for the warranty period:

Purchase invoice provided by the customer: the first flight provides a standard warranty period of 60 months (5 years) from the invoice date;

The customer fails to provide the invoice: from the production date (according to the SN number of the machine), Our company provides a warranty period of 63 months (5.25 years).

In case of any special warranty agreement, the purchase agreement shall prevail.

Extended warranty period

Within 12 months of the purchase of the inverter (based on the purchase invoice) or within 24 months of the production of the inverter(SN number of machine, based on the first date of arrival),Customers can apply to buy extended warranty products from the company's sales team by providing the product serial number, Our company may refuse to do not conform to the time limit extended warranty purchase application.Customers can buy an extended warranty of 5, 10, 15 years.

If the customer wants to apply for the extended warranty service, please contact the sales team of our company. to purchase the products that are beyond the purchase period of extended warranty but have not yet passed the standard quality warranty period. Customers shall bear different extended premium.

During the extended warranty period, PV components GPRS, WIFI and lightning protection devices are not included in the extended warranty period. If they fail during the extended warranty period, customers need to purchase and replace them from the our company.

Once the extended warranty service is purchased, our company will issue the

All copy reserved ©Shenzhen SOFARSOLAR Co., Ltd.

extended warranty card to the customer to confirm the extended warranty period.

Invalid warranty clause

Equipment failure caused by the following reasons is not covered by the warranty:

1) The "warranty card" has not been sent to the distributor or our company;

2) Without the consent of our company to change equipment or replace parts;

3) Use unqualified materials to support our company 's products, resulting in product failure;

4) Technicians of non-company modify or attempt to repair and erase the product serial number or silk screen;

5) Incorrect installation, debugging and use methods;

6) Failure to comply with safety regulations (certification standards, etc.);

7) Damage caused by improper storage by dealers or end users;

8) Transportation damage (including scratches caused by internal packaging during transportation).Please claim directly from the transportation company or insurance company as soon as possible and obtain damage identification such as container/package unloading;

9) Failure to follow the product user manual, installation manual and maintenance guidelines;

10) Improper use or misuse of the device;

11) Poor ventilation of the device;

12) The product maintenance process does not follow relevant standards;

13) Failure or damage caused by natural disasters or other force (such as earthquake, lightning strike, fire, etc.)

All copy reserved ©Shenzhen SOFARSOLAR Co., Ltd.



Product Name: Solar Grid-tied Inverter

Company Name: Shenzhen SOFARSOLAR Co., Ltd.
ADD: 11/F., Gaoxinqi Technology Building, No.67 Area, Xingdong Community, Xin'an Sub-district, Bao'an District, Shenzhen City,China
Email: service@sofarsolar.com
Tel: 0510-6690 2300
Web: www.sofarsolar.com

301.00000355-1