Technical Data



Features:

- Max efficiency 98.1%
- High efficiency across wide operation range
- Wide range of input DC and MPPT voltage
- IP65 protection degree
- Two independent MPPT input
- DC switch option
- Three phase fed-in design

Certificates:

VDE0126-1-1 G59/2

Efficiency Curve (PVI17KTL):

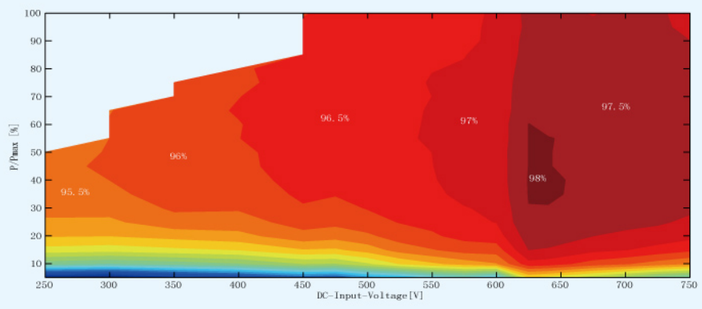

Circuit Diagram:

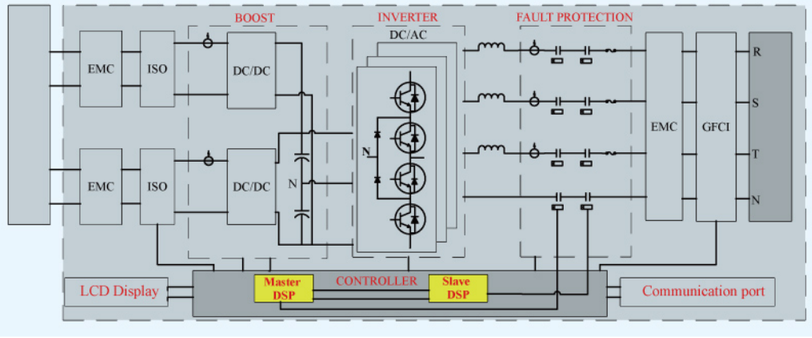

PVI Series

10KTL / 12KTL / 17KTL

Input Data

Model	PVI10KTL	PVI12KTL	PVI17KTL
Max. Input Power [W]	10300	12400	17600
$V_{MAX\,PV}$ [V_{DC}]	900		
Max. Input Current [A]	2*12	22 + 11	2* 22
$I_{SC\,PV}$ [A]	2*30		
MPP voltage range [V_{DC}]	250-800		

Output Data

Model	PVI10KTL	PVI12KTL	PVI17KTL
Rated Output Power [W]	10000	12000	17000
Max. Output Power [W]	10500	13200	17850
Max. Output Current [A]	16.6	19.2	25.8
Rated Output Voltage [V_{AC}]	3N~ 400		
Operating voltage range [V_{AC}]	340-440		
Rated Output Frequency [Hz]	50		
Operating frequency range [Hz]	47.53-50.17		
Power Factor	> 0.99		
Maximum Conversion Efficiency(DC/AC)	98%		
Standby power consumption [W]	< 12		
Night Power Consumption [W]	< 1		
THD [V] / [I] (full power 100%)	< 3%		
Acoustic Noise [dB]	< 55		

Safety and Protection

Model	PVI10KTL	PVI12KTL	PVI17KTL
Internal PV over voltage	Has		
Detection of input isolation impedance	Has		
Ground fault current detection	Has		
Monitor of grid voltage	Has		
DC injection of output current	Has		
Reference code	EN50178, IEC/EN62109-1/VDE0126-1-1 EN61000-6-2/EN61000-6-4		

Construction Data

Model	PVI10KTL	PVI12KTL	PVI17KTL
Type of inverter	Non-isolated		
Separated by	Transformerless		
MPPT string	2 strings		
Protective Class	I		
Enclosure (IP)	IP65		
Temperature range [°C]	-25 to 60		
Overvoltage Category [OVC]	OVCIII		
Pollution degree [PD]	PD 3 (outside) PD 2 (inside)		
Weight [kg]	51	51	52
Size [mm]	700*520*170		