Solar-Log™



Components Connection Manual FW6.x (V1.79)

Solar-Log™

Publisher:
Solar-Log GmbH
Fuhrmannstr. 9
72351 Geislingen-Binsdorf
Germany

International support
Tel.: +49 (0)7428/4089-300

Contact: https://www.solar-log.com

Italy
Technical support: +39 0471 631032

France
Technical support: +33 97 7909708

Switzerland
Technical support: +41 565 355346

The Solar-Log™ Manual Orientation

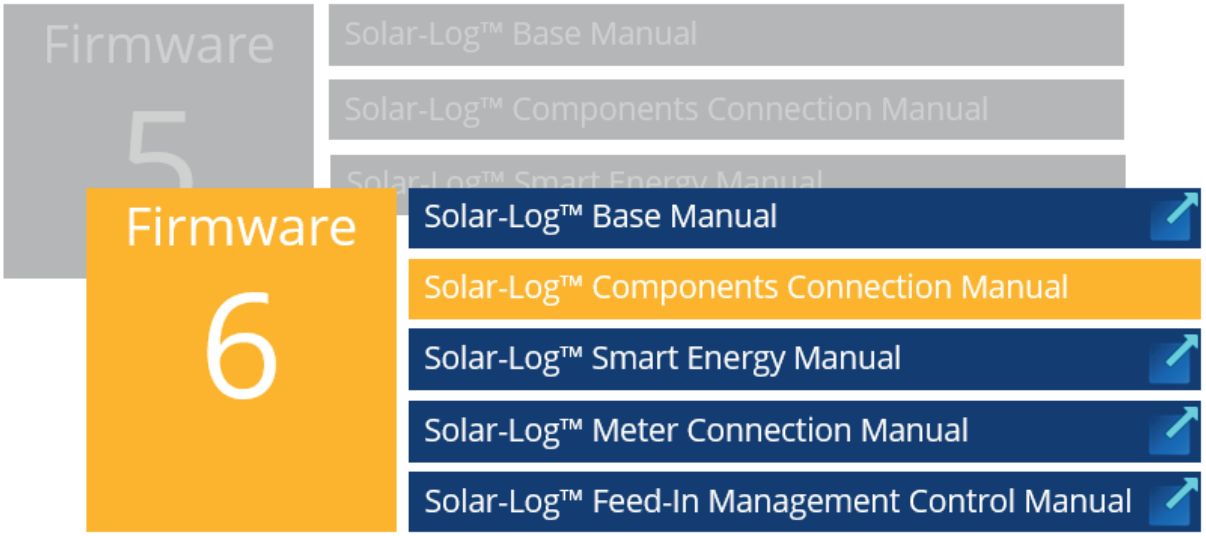

Opened manual

Further manuals

Chapter overview

Inverter.....26-502
Hybrid systems.....503-546
Battery Energy Storage Systems (BESS).....547-570
Meter.....572-638
Heating rods & Control.....639-647
Heat pumps.....648-653
Sensors.....654-664
Pyranometer.....665-671
Smart Plug components.....672-678
EV charger.....679-686
Large External Displays.....687-689
List of figures.....691

Table of Contents

Inverter 26

1 General 27

2 Connections 28
2.1 Solar-Log™ Base PIN assignment 28
2.2 RJ45 31
2.3 RJ11 Configuration 32

3 Bus Termination 33
3.1 Bus Termination (RS485 or RS485/422) 33

4 Connecting the inverters 34
4.1 Switch off the inverters and Solar-Log™ 35

5 ABB (FIMER S.p.A.) 36
5.1 ABB PVS300 36
5.2 ABB PRO-33TL 38
5.3 ABB Central Inverters 39
5.4 ABB-Power-One/Aurora/PVI/TRIO/Ultra/UNO 40
5.5 ABB - 50/60 (Sunspec via RS485) 42
5.6 ABB - PVS 50-TL / 60-TL (Sunspec via RS485) 45
5.7 ABB - PVS 100-TL / 120-TL / 175-TL (Sunspec via RS485) 47
5.8 ABB - Sunspec via Ethernet 49

6 Advanced Energy 51
6.1 Advanced Energy - AE-1 51
6.2 Advanced Energy - AE-3 53
6.3 Advanced Energy - AE-TX 55

7 AEG 57

7.1 AEG PS 57
7.2 AEG Protect 59

8 Albatech 61
8.1 Albatech APL Trifase 15 / 20 61
8.2 Albatech APL Monofase 63

9 ALPHA-SOL 65
9.1 ALPHA-SOL 65

10 AROS Solar Technology 68
10.1 AROS Solar Technology (RS422) 68
10.2 AROS Solar Technology (RS485) 70

11 Astronergy 72
11.1 Astronergy 72

12 Aten 74
12.1 Aten 74

13 Autarco 75
13.1 Autarco 75

14 Benning 77
14.1 Benning 77

15 Bonfiglioli (formerly Vectron) 79
15.1 Bonfiglioli 79

16 CanadianSolar 81
16.1 CanadianSolar - CSI-CT series 81
16.2 CanadianSolar - CSI-GS/GI series 83

17 Carlo Gavazzi 85
17.1 Carlo Gavazzi - ISMG model 85
17.2 Carlo Gavazzi - HINRG model 87

18 Chint Power 89
18.1 Chint Power (CPS SC and CPS SCE to 20k) 89
18.2 Chint Power (CPS 20k+) 91
18.3 Chint Power Modbus 93
18.4 Chint Power Modbus (CPS-PSW) 94
18.5 Chint Power Modbus (DO - DO/HE) 95
18.6 Chint Power Modbus (DO/US) 97

19 CMS 99
19.1 CMS 99

20 CyberPower 101
20.1 CyberPower 101

21 Danfoss 103
21.1 Danfoss 103

22 Delta 105
22.1 Delta (Standard) 105
22.2 Delta RPI (H/M) 107
22.3 Delta RPI - Sunspec 109

23 Diehl Ako 111
23.1 Diehl Ako 111

24 Eaton 112
24.1 Eaton 112

25 EEI 114
25.1 EEI 114

26 Effekta 115
26.1 Effekta - ES 115
26.2 Effekta KS Multitracker 117
26.3 Effekta KS Singletracker 119

27 EHE 121
27.1 EHE N1k5TL to N50kTL 121
27.2 EHE N10k to N100k 123
27.3 EHE N250k to N500k-TL 125

28 EKO Energy 127
28.1 EKO Energy 127

29 Eltek 129
29.1 Eltek 129
29.2 Eltek central inverter 131

30 Enfinity 133
30.1 Enfinity 133

31 Europa-Solar AG 135
31.1 Europa-Solar AG 135

32 Evoco 137
32.1 Evoco 137

33 FIMER S.p.A. 139
33.1 PVS 10.0-TL / 12,5-TL / 15.0-TL (Sunspec via RS485) 139
33.2 Fimer - PVS 50-TL / 60-TL (Sunspec via RS485) 141
33.3 Fimer - PVS 100-TL / 120-TL / 175-TL (Sunspec via RS485) 143
33.4 Fimer - PVS-TL Sunspec via Ethernet 145

34 FoxESS 147
34.1 FoxESS - R series 147

35 Fronius 149
35.1 Fronius with ComCard 149
35.2 Fronius RL 151
35.3 Fronius – Argeno 125k 152
35.4 Fronius ECO/Galvo/Symo series (RS422) 154
35.5 Fronius ECO/Galvo/Primo/Symo series via Ethernet 155
35.6 Fronius Tauro 157
35.7 Fronius VERTO 160

36 Gefran 163
36.1 Gefran 163

37 General Electric inverters (GE) 166
37.1 General Electric inverters (GE) 166

38 Generic Sunspec Driver 167

39 GESOLAR 169
39.1 GESOLAR 169

40 Ginlong 171
40.1 Ginlong 171
40.2 Ginlong Solis-5G 174

41 GMDE 177
41.1 GMDE 177

42 GoodWe 179
42.1 GoodWe (RS422) 179
42.2 GoodWe (RS485) 181
42.3 GoodWe HT series 184
42.4 GoodWe MT/SMT series 185

43 Growatt 187
43.1 Growatt 187

43.2 Growatt - X Generation 191

44 GTec 194
44.1 GTec 194

45 Helios Systems 196
45.1 Helios Systems (HSI 20) 196
44.2 Helios Systems - Central Inverters 198

46 HiQ Solar 199
46.1 TrueString 199

47 HopeWind 200
47.1 HopeWind 200

48 Huawei 202
48.1 Huawei Sun2000 V1 202
48.2 Huawei Sun2000 V2 206

49 Hyundai 211
49.1 Hyundai HPC-050HT-E and HPC-100HT-E 211
49.2 Hyundai HPC-250HT-E 213

50 Ingeteam 215
50.1 INGECON® SUN 1Play TL M 215
50.2 INGECON® SUN 3Play TL 217
50.3 INGECON® SUN 3Play TL M 219
50.4 INGECON® SUN 3Play 24/40TL U M480 221
50.5 INGECON® SUN 3Play 100TL 223
50.6 INGECON® - Sun Power & Max / Sun Smart & TL / Sun Lite / 1 phase 225

51 INVT iMARS 227
51.1 INVT iMARS / MG series / BG series 227
51.2 INVT iMARS / XG series 229

52 JFY 231
52.1 SUNTREE JFY 231

53 Kaco 233
53.1 Kaco - Powador 233
53.2 Kaco – PVI BluePlanet 237
53.3 Kaco – NX3 239
53.4 Kaco – KACO NX3 100 M8 / 125 M10 242
53.5 Kaco – BluePlanet via Ethernet 244

54 Kehua 246
54.1 Kehua (Single phase) 246
54.2 Kehua (3-phase) 248
54.3 Kehua - SPI series 250

55 KLNE 252
55.1 KLNE (Solartec and Sunteams) 252

56 Kostal and Solar-Fabrik 254
56.1 Kostal Piko and Solar-Fabrik Inverter Convert T (RS485) 254
56.2 Kostal Piko CI - Modbus 256
56.3 Kostal Piko CI G2 series 258
56.4 Kostal Piko MP 260
56.5 Kostal Piko IQ 262
56.6 Kostal LAN Version 264

57 Kstar 266
57.1 Kstar Multitracker 266
57.2 Kstar - BLUE / G / KSG 268
57.3 Kstar Singletracker 271

58 Mastervolt 273
58.1 Mastervolt (RS485) 273

59 Mitsubishi 275
59.1 Mitsubishi with RS485 interface 275

60 Motech 277
60.1 Motech (RS485) 277

61 Oelmaier 279
61.1 Oelmaier 279

62 Omnik 281
62.1 Omnik (RS422) 281
62.2 Omnik (RS485) 283

63 Omron 285
63.1 Omron 285

64 Pairan 287
64.1 Pairan 287

65 Phoenixtec 288
65.1 Phoenixtec 288

66 Platinum (formerly Diehl Ako) 290
66.1 Platinum with RS485 interface 290
66.2 Platinum H 292

67 Polycab 293
67.1 Polycab 293

68 Powercom 296
68.1 Powercom 296

69 Power-One/Aurora 299
69.1 Power-One/Aurora 299

70 PrimeVOLT 301
70.1 PrimeVOLT 301

71 PVPowered 303
71.1 PV Powered – central inverter RS485 303
71.2 PV Powered - string inverter 305

72 Q3 306
72.1 Q3 3000-6600 306
72.2 Q3 12000-14000 308
72.3 QX3 310
72.4 QY 312

73 RCT Power 314
73.1 RCT Power 314

74 REFUSOL 316
74.1 REFUSOL 316

75 REP 321
75.1 REP 321

76 Reverberi 323
76.1 Reverberi - EDI series 323

77 Riello 325
77.1 Riello 325

78 Rishabh Instruments Pvt. Ltd. 327
78.1 Rishabh - Radius 327

79 SAJ 329
79.1 Suntrio Plus/R5 329

80 SALICRU 331
80.1 SALICRU EQX 331
80.2 SALICRU EQXLV 333

81 Samil Power 334
81.1 Samil Power 334

82 Santerno 336
82.1 Santerno 336

83 Schneider Electric 338
83.1 Schneider Electric SunEzy 338
83.2 Schneider Electric Xantrex GT30E 340
83.3 Schneider Electric Conext 341
83.4 Schneider Electric Conext Sunspec (RS485) 343
83.5 Schneider Electric Conext CL60 Sunspec (Ethernet) 345

84 Schüco 346
84.1 Schüco IPE CN series 346
84.2 Schüco IPE CT series 348
84.3 Schüco IPE SN series 350
84.4 Schüco SGI series (RS485) 352

85 Shindengen 354
85.1 Shindengen 354

86 SIEL 356
86.1 SIEL (single phase) 356
86.2 SIEL (3-phase) 359
86.3 SIEL - SPX / SRT series 360

87 Siemens 362
87.1 Siemens 362

88 Siliken 365

88.1 Siliken Central inverters 365

89 SiNeng 367
89.1 SiNeng CP/EP 367
89.2 SiNeng SP 369

90 SMA 371
90.1 Overview 371
90.2 SMA connection using special RS485 piggyback card 372
90.3 Connect SMA with original SMA RS485 piggy back and the SMA RS485 data module 375
90.4 SMA Meter Connection Box 378
90.5 SMA - FLX series 379
90.6 SMA SOLID Q 381
90.7 SMA Speedwire 383
90.8 SMA - Sunny Central 385
90.9 SMA - Sunny Tripower CORE1 386
90.10 SMA - Sunny Tripower CORE2 388
90.11 SMA - Sunspec Modbus 390
90.12 SMA - Sunny Tripower Modbus 391
90.13 SMA - Sunny Tripower X 393

91 SOCOMEC 395
91.1 SOCOMEC Sunsys B series 395

92 SofarSolar 397
92.1 SofarSolar G2 397
92.2 SofarSolar G3 399
92.3 SofarSolar G4 401
92.4 SofarSolar G3/G4 - Connection via Ethernet 403

93 SolarEdge 405
93.1 SolarEdge 405
93.2 SolarEdge - Connection via Ethernet 407

94 SolarMax 408
94.1 SolarMax - SHT, SMT, SP series 408
94.2 SolarMax – S, MT, P, TS, TS-SV and HT series 410
94.3 SolarMax - C series 413
94.4 SolarMax – E series 415

94.5 SolarMax via LAN interface 417

95 SolarMG 419
95.1 SolarMG 419

96 SolaX Power 422
96.1 SolaX Power X1 422
96.2 SolaX Power X3-Commercial 424
96.3 SolaX Power X3-MIC G2 426
96.4 SolaX Power X3-PRO G2 428
96.5 SolaX Power ZDNY series 430

97 Solectria 432
97.1 Solectria V1 (>9k) 432
97.2 Solectria V2 (<9k) 434
97.3 Solectria V3 (<3k) 436
97.4 Solectria V4 438
97.5 Solectria V5 439

98 Solplanet 441
98.1 Solplanet 441

99 Solutronic 443
99.1 Solutronic SP series 443
99.2 Solutronic SP/SE series 445

100 Steca 447
100.1 Steca 447
100.2 Steca (>=17k) 449

101 Sungrow 451
101.1 Sungrow 451

102 SunPower 455
102.1 SunPower SPR-F-Model with Fronius ComCard 455

102.2 SunPower SPR-M-Model connection using special RS485 piggyback card 457
102.3 SunPower SPR-M-Model connect with original SMA RS485 piggy back and the SMARS485 data module 460

103 Suntigua 462
103.1 Suntigua 462

104 Sunville 464
104.1 Sunville 464

105 Sunways 466
105.1 Sunways - AT/NT/PT 466

106 Surpass SSE 468
106.1 Surpass SSE - SPS series 468

107 Sustainable Energy 470
107.1 Sustainable Energy 470

108 TBEA 472
108.1 TBEA 472

109 Trannergy 474
109.1 Trannergy 474

110 Vaillant 476
110.1 Vaillant – auroPOWER VPI /1 and VPI (RS485) 476

111 Valenia 478
111.1 Valenia 478

112 Vectron 480
112.1 Vectron 480

113 Vision 481
113.1 Vision Multitracker 481
113.2 Vision Singletracker 483

114 WINAICO 485
114.1 WINAICO 485

115 Würth 488
115.1 Würth SolarStar series 488

116 Yaskawa 490
116.1 Yaskawa 490

117 Zentral Solar Deutschland ZSD 492
117.1 Zentral Solar Deutschland TLQ (RS485) 492
117.2 Zentral Solar Deutschland ZSD - zentralpower 494

118 Zeversolar 495
118.1 Zeversolar 495

119 Zucchetti Centro Sistemi S.p.a 497
119.1 Azzurro V2 497
119.2 Azzurro V3 499

120 Appendix 501
120.1 SMA mixed wiring 501
120.2 Interconnection of Kaco Powador inverters 502

Hybrid systems 503

1 ABB (FIMER S.p.A.) Microgrid (Hybrid system) 504
1.1 ABB (FIMER S.p.A.) Microgrid (Hybrid system) 504

2 FoxESS (Hybrid system) 506
2.1 FoxESS - H3 series (Hybrid system) 506

3 Fronius (Hybrid system) 508
3.1 Fronius Symo Hybrid system via Ethernet 508
3.2 Fronius Primo/Symo (GEN24) (Hybrid system) 510
3.3 Fronius VERTO/VERTO-Plus (Hybrid system) 513

4 GoodWe (Hybrid system) 516
4.1 GoodWe (RS485) (Hybrid system) 516
4.2 GoodWe (LAN) (Hybrid system) 518

5 Huawei (Hybrid system) 520
5.1 Huawei (Hybrid system) 520

6 Kostal (Hybrid system) 522
6.1 Kostal Plenticore plus (Hybrid system) 522
6.2 Kostal Plenticore G3 (Hybrid system) 525

7 Kyocera (Hybrid system) 528
7.1 Kyocera Inverter/Battery System (Hybrid system) 528

8 Phonosolar (Hybrid system) 529
8.1 PhonoCube (Hybrid system) 529

9 QCells (Hybrid system) 531
9.1 Q-Home + ESS-G1 (Hybrid system) 531

10 RCT Power Storage DC (Hybrid system) 533
10.1 RCT Power Storage DC (Hybrid system) 533

11 SofarSolar (Hybrid system)..... 535
11.1 SofarSolar (Hybrid system)..... 535

12 SolarEdge - StoreEdge (Hybrid system)..... 538
12.1 SolarEdge - StoreEdge (Hybrid system)..... 538

13 Solinteg (Hybrid system)..... 540
13.1 Solinteg - M series (Hybrid system)..... 540

14 Sungrow (Hybridsystem)..... 542
14.1 Sungrow Residential Hybrid..... 542

15 Zucchetti Centro Sistemi S.p.a (Hybrid system)..... 544
15.1 Azzurro (Hybrid system)..... 544

Battery Energy Storage Systems (BESS)..... 547

1 Ads-Tec StoraXe (Battery energy storage systems)..... 548
1.1 PowerBooster / StorageRackSystem (Battery energy storage systems)..... 548

2 Intilion (Battery energy storage systems)..... 550
2.1 Intilion scalebloc (Battery energy storage systems)..... 550
2.2 Intilion scalestac (Battery energy storage systems)..... 552

3 Pixii - Battery energy storage systems..... 554
3.1 Pixii - Power Sharper (Battery energy storage systems)..... 554

4 RCT Power Storage AC (Battery energy storage systems)..... 556
4.1 RCT Power Storage AC (Battery energy storage systems)..... 556
4.2 RCT Power Commercial Storage (Battery energy storage systems)..... 558

5 SMA - Battery energy storage systems 560
5.1 SMA - Sunny Island (Battery energy storage systems) 560

6 sonnen (Battery energy storage systems) 562
6.1 sonnen Eco 6.0 / 7.0 (Battery energy storage systems) 562
6.2 sonnen Eco 8.0 (Battery energy storage systems) 564

7 VARTA (Battery energy storage systems) 566
7.1 VARTA House (Battery energy storage systems) 566
7.2 VARTA Industrial (Battery energy storage systems) 569

Meter 572

1 External Power Meter (phase total) 573
1.1 Recording Energy Flows with External Power Meters (phase total) 573

2 Solar-Log™ Meter Operating Modes 575
2.1 Explanation of the Solar-Log™ Meter Operating Modes 575

3 General Information on Wiring 576
3.1 Wiring for S0 meter 576
3.2 Wiring for RS485 meter 576
3.3 Wiring meters to record self-consumption 576

4 Solar-Log™ PRO 580
4.1 Solar-Log™ PRO1 580
4.2 Solar-Log™ PRO2 583
4.3 Solar-Log™ PRO380 586
4.4 Solar-Log™ PRO380-CT 589

5 Elkor - WattsOn 593
5.1 Elkor - WattsOn-1100 (3-phase) 593
5.2 Elkor - WattsOn-Mark II (3-phase) 595

6 Inepro 597
6.1 Inepro 75D 597
6.2 Inepro 1250D 599

7 Iskra 601
7.1 Iskra WS0021 601
7.2 Iskra WS0031 602
7.3 Iskra WS1102 603

8 Janitza „Utility Meter“ 604
8.1 Janitza UMG 104 / UMG 604 / UMG 604-PRO (12V / 24V) 604
8.2 Janitza UMG 604 / UMG 604-PRO (12V / 24V) via Ethernet 610
8.3 Janitza UMG 96-PA-/-MID/-MID+ via RS485 611
8.4 Janitza UMG 96 RM-E über RS485 617
8.5 Janitza UMG 96 RM-E via Ethernet 622

9 Larsen & Toubro 623
9.1 Larsen & Toubro (WDM313CDNC) 623

10 Mikro PowerMeter 625
10.1 Mikro PowerMeter DPM680 625

11 Real Energy Systems - Prisma Meter 627
11.1 Prisma Meter via Ethernet 627

12 Schneider Electric 629
12.1 Schneider Electric EM6400NG (3-phase) 629
12.2 Schneider Electric EM6400S (3-phase) 631
12.3 Schneider Electric iEM3000 series (3-phasig) 633

13 Secure Meters 635
13.1 Secure Meters (3-phase) 635

14 WattNode (CCS) 637
14.1 WattNode (CCS) (3-phase / 1-phase) 637

Heating rods & Control 639

1 EGO Smart Heater 640
1.1 EGO Smart Heater (RS485) 640
1.2 EGO Smart Heater via Ethernet 642

2 Heating rod my-PV AC ELWA-E 643
2.1 Heating rod my-PV AC ELWA-E via Ethernet 643
2.2 Heating rod my-PV AC ELWA 2 via Ethernet 645

3 my-PV - AC-THOR - Control device 647
3.1 my-PV - AC THOR via Ethernet 647

Heat pumps 648

1 IDM Heat pumps 649
1.1 IDM Heat pumps 649

2 Stiebel-Eltron Heat pumps 651
2.1 Stiebel Eltron Heat pumps (ISG) 651

Sensors 654

1 Sensor Basic 655

2 Sensor Box Professional 658
2.1 Technical Information 658
2.2 Mechanical Installation Sensor Box Professional 658
2.3 Wiring the Data Cable with the Solar-Log™ 659
2.4 Starting Up at the Solar-Log™ 660
2.5 Technical Data 660

3 Sensor Box Professional Plus 661
3.1 Technical Information 661
3.2 Mechanical Installation Optional Sensors 661
3.3 Mechanical Installation Optional Sensors 662
3.4 Wiring the Data Cable with the Solar-Log™ 662
3.5 Starting Up at the Solar-Log™ 663
3.6 Technical Data 663

4 Seven Sensor - 3S-IS 664
4.1 Technical description 664
4.2 Available sensors and supported models 664
4.3 Wiring / Detection with Solar-Log™ 664

Pyranometer 665

1 Kipp & Zonen - Pyranometer 666
1.1 Kipp & Zonen - Pyranometer 666

2 Lufft - Pyranometer 668
2.1 Lufft - Pyranometer 668

3 Rainwise - PVMet™-200 (Weather station) 670
3.1 PVMet™-200 (Weather station) 670

Smart Plug components 672

1 Allnet Network Power Socket 673
1.1 Allnet Network Power Socket 673

2 Smart Relay Station V2 675
2.1 Smart Relay Station V2 675

3 Solar-Log™ Smart Relay Box 676

3.1 Solar-Log™ Smart Relay Box 676

4 WeMo Insight Switch 678
4.1 WeMo Insight Switch 678

EV charger 679

1 ChargeX Aqueduct - EV charger 680
1.1 ChargeX Aqueduct - EV charger 680

2 Keba - EV charger 681
2.1 Keba - EV charger (KeContact P20 / P30) 681

3 Mennekes - EV charger 683
3.1 Mennekes - EV charger 683

4 Weidmüller - Wallbox 685
4.1 Weidmüller - Wallbox 685

Large External Displays 687

1 Large External Displays 688
1.1 General information 688
1.2 Schneider Displaytechnik 689
1.3 RiCo Electronic 689

List of figures 690

01

Inverter

1 General

This manual is intended for use by solar energy technicians / installers and professional electricians for Solar-Log™. It should be noted that the installation and commissioning of the individual components is only to be performed by properly trained specialists.

Please refer to Chapter 4 „Connecting Inverters“ for more information.

Additional information on the individual series, models and components is available in the Component Database on our website.

Our product documentation is being constantly updated and expanded.

The current versions of the documents can be downloaded from our website:
https://www.solar-log.com/en/support/downloads/manuals

The descriptions in this manual refer to firmware version 6.4.2

Compatibility list of the SolarLog™ devices with the manual:
Solar-Log™ Base 15
Solar-Log™ Base 15V2
Solar-Log™ Base 100
Solar-Log™ Base 2000

Very important note on communication! Be sure to observe!

To avoid communication problems between the Solar-Log and the connected devices on the same bus, please observe the following:

- The connected devices must use the same protocol.
- Do not connect two different manufacturers to the same bus.
- The connected devices must be set to the same baud rate.

Very important!

For the connection of the devices of the respective manufacturer, please observe the manufacturer's documentation in the respective valid version.

Very important for the feed-in management!

Please note that the function of the control speed depends on the inverters. Therefore, make sure that the inverters implement the power settings immediately.

2 Connections

2.1 Solar-Log™ Base PIN assignment

PIN	RS485-A	RS485-B	RS422
6	Data+	-	T/RX+
7	24V	-	24V
8	GND	-	GND
9	Data-	-	T/RX-
10	-	Data+	R/TX+
11	-	24V	-
12	-	GND	-
13	-	Data-	R/TX-

Solar-Log™ Base PIN assignment (with color explanation)

PIN	Power	S_0 IN	RS485-A/B	RS422
Pin	Assignment	-	-	-
1 (Red)	V_{in} (24 V_{DC})	-	-	-
2 (Blue)	Ground	-	-	-
3 (Light green)	Functional earth	-	-	-
4 (Grey)	-	S_0 IN+	-	-
5 (Grey)	-	S_0 IN-	-	-
6 (White)	-	-	Data+	T/RX+
7 (Yellow)	-	-	24V - ext.	24V - ext.
8 (Olive green)	-	-	GND	GND
9 (Brown)	-	-	Data-	T/RX-
10 (White)	-	-	Data+	R/TX+
11 (Yellow)	-	-	24V	-
12 (Olive green)	-	-	GND	-
13 (Brown)	-	-	Data-	R/TX-

Solar-Log™ Base Color legend of connections

Color	Meaning
Red	Power supply
Blue	GND
Light green	Functional ground
Gray	Input S0
White	Input (Data+, TX+/RX+, A+)
Yellow	24 V / (12 V)*
Olive green	GND*
Brown	Output (Data-, TX-/RX-, B-)

* Power connection for external components.

Solar-Log™ MOD 485 PIN assignment top

PIN assignment	RS485-A/B	RS422	Power
Pin	Assignment	Assignment	Assignment
1 (Red)	-	-	V_{in} 24 V_{DC} / (12 V_{DC})
2 (Blue)	-	-	Ground
3 (Light green)	-	-	Functional ground
4 (Gray)	-	-	
5 (Gray)	-	-	
6 (White)	Data+	T/RX +	
7 (Yellow)	24 V / (12V)	24 V / (12V)	
8 (Olive green)	GND	GND	
9 (Brown)	Data -	T/RX -	
10 (White)	Data +	R/TX +	
11 (Yellow)	24 V / (12V)	-	
12 (Olive green)	GND	-	
13 (Brown)	Data-	R/TX -	

Solar-Log™ MOD 485 PIN assignment below

PIN assignment	RS485-C/D	RS422
Pin	Assignment	Assignment
1 (Red)	Data+	T/RX+
2 (Blue)	24 V / (12 V)	24 V / (12 V)
3 (Light green)	GND	GND
4 (Grey)	Data-	T/RX-
5 (Grey)	Data+	T/RX+
6 (White)	24 V / (12 V)	-
7 (Yellow)	GND	-
8 (Olive green)	Data-	T/RX-

2.2 RJ45

Some inverter manufacturers use RJ45 jacks on their units.

The pin assignments are manufacturer-specific.

The connection with the interface(s) of the Solar-Log™ must be made as described for the respective inverter.

Refer to the following document for the numbering of the pins for the RJ45 connection.

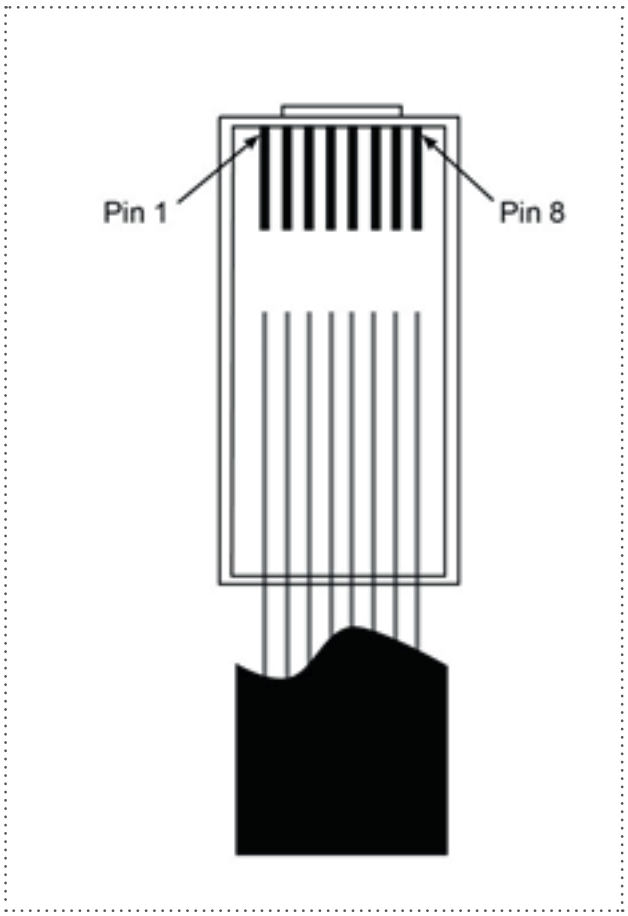

Fig.: RJ45 plug pin assignments

Caution

Risk of damage to the unit!
The Solar-Log™ also has an RJ45 socket, which must never be connected to the RJ45 socket on the inverter.

► Only connect inverters via the RS485/422 Solar-Log™ interface(s).

2.3 RJ11 Configuration

Some inverter manufacturers use RJ11 jacks on their units.

The pin assignments are manufacturer-specific.

The connection with the interface(s) of the Solar-Log™ must be made as described for the respective inverter.

Refer to the following document for the numbering of the pins for the RJ45 connection.

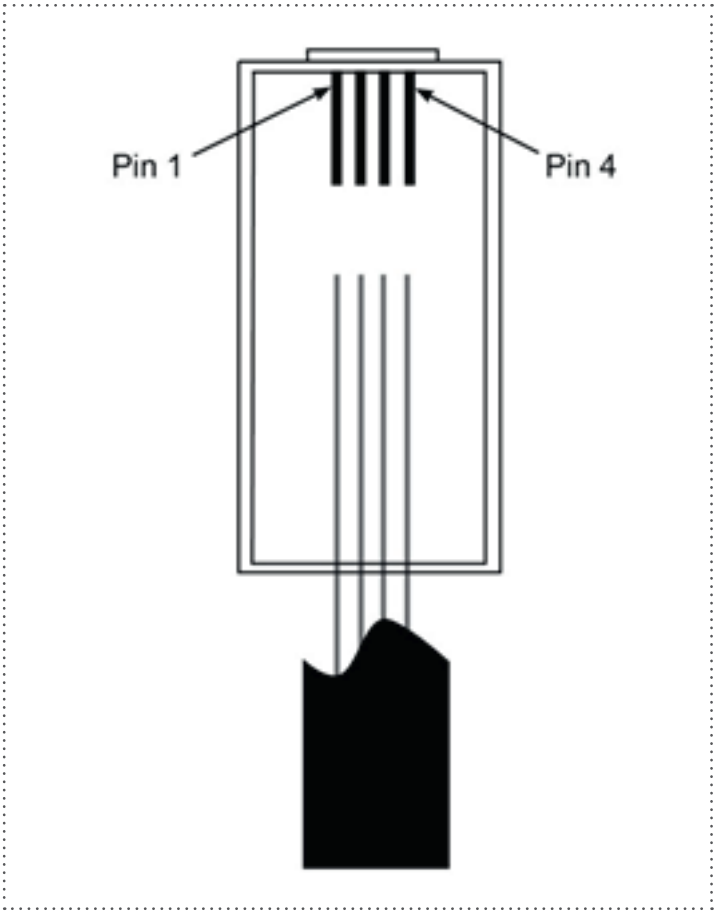

Fig.: RJ11 plug pin assignments

Caution

Risk of damage to the unit!
The Solar-Log™ has an RJ45 socket, which must never be connected to the RJ11 socket on the inverter.

► Only connect inverters via the RS485/422 Solar-Log™ interface(s).

3 Bus Termination

3.1 Bus Termination (RS485 or RS485/422)

There are many causes of communication interference in a RS485 bus; one of them is bus reflexion. A reflexion occurs when the transmitter signal is not completely absorbed by the load. That is why the source impedance should correspond to the load impedance and line surge impedance since this allows the full signal power to be reached with only minimal reflexion. The serial communication of the RS485 interface operates most efficiently when the source and load impedance is at 120 ohms. Consequently, the RS485 standard recommends a bus cable with a line surge impedance of Z0 = 120 ohms. To avoid reflexion in the bus, the beginning and end of the bus cable has to be terminated according to the line surge impedance.

Bus toplogy example for the Solar-Log™ Base:

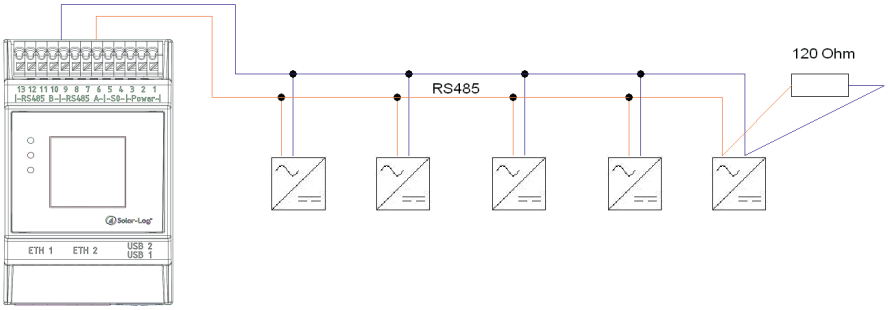

Fig.: Solar-Log™ Base Example of a bus topology

Note

All Solar-Log™ Base devices are terminated ex works. An installation of the Solar-Log™ Base devices can therefore only take place at the beginning or end of a bus (see example above).

Note

Since many inverter manufacturers have integrated their own termination methods for the bus connection, e.g. dip switches or jumpers, it is important to first refer to the manufacturer's inverter manual.

4 Connecting the inverters

As each inverter manufacturer uses different wiring connections and connectors, the corresponding data cables must be adapted correctly.

- You will find the terminal strip block wiring diagram to connect the inverters in table form in the following sections on connecting inverters.

Always read the manufacturer-specific instructions for connecting the data cable. You will find these instructions in the manufacturer's documentation.
However, when assigning the inverter wiring on the Solar-Log™ (RS485/422 B connection) , follow the instructions in this manual, otherwise the inverters will not be detected by Solar-Log™.



Danger

Risk of death by electric shock if inverters are opened.

► Never open the inverter housing when the inverter is connected to power.
► Switching inverters off.
► Always read the installation and safety instructions given in the manual for the corresponding inverter.
► Any work on inverters must only be carried out by trained electricians.



Caution

Damage to the electrical components in inverters and on interface boards due to electrostatic discharge.

► Avoid contact with component connections and plug contacts.
► Before picking up the component, ground yourself by holding the PE or the unpainted part of the inverter housing.



Caution

Damage to the electrical components of the Solar-Log™ due to the wiring of the Solar-Log™!

► Switching the Solar-Log™ off.



Very important note on communication! Be sure to observe!

To avoid communication problems between the Solar-Log and the connected devices on the same bus, please observe the following:

- The connected devices must use the same protocol.
- Do not connect two different manufacturers to the same bus.
- The connected devices must be set to the same baud rate.

4.1 Switch off the inverters and Solar-Log™

Switching inverters off

Always turn off all of the inverters first before a making a cable connection between the Solar-Log™ and the connections inside the inverter; and before installing an interface board in the inverter,

To do this, read the manufacturer's documentation for the inverter, and proceed as follows:

1. Disconnect the AC side
2. Disconnect the DC side
3. Wait at least 5 minutes until the capacitor in the inverters have discharged.

Switching the Solar-Log™ off

- Remove the power plug from the socket or the "Power 12 V" jack on the Solar-Log™.

5 ABB (FIMER S.p.A.)

5.1 ABB PVS300

Termination	Addressing	Interface
Yes	Yes	RS485

Select “ABB: PVS Central” during device detection.

Supported models:

- PVS300-TL-3300W-2, PVS300-TL-4000W-2, PVS300-TL-4600W-2, PVS300-TL-6000W-2, PVS300-TL-8000W-2

Overview

- Where to connect: X4 terminal block under the cover.
- Communication address must be allocated.
- 3-pin wiring.
- Installation steps:
  - Switch off the inverters and Solar-Log™.
  - Connect inverters to the Solar-Log™.
  - Connect the inverters to each other.

Connect inverters to the Solar-Log™

The wiring is done using a

- self-made cable connection.

Procedure

1. Unscrew the side cover as shown in the inverter's instructions.
2. If you are making the cable yourself, connect the wires as shown in the following diagram:

Solar-Log™ Base RS485 (A) / (B)	X4 terminal block inverter
Terminal	PIN
► (A) 6 or (B) 10 (Data+)	► 1 - Data+
► (A) 8 or (B) 12 GND	► 3 - GND
► (A) 9 or (B) 13 (Data-)	► 2 - Data-

3. If no further inverter is connected, terminate the inverter according to the instructions for the inverter.
4. Screw the inverter cover on again.

Connect the inverters to each other

- Where to connect: X4 terminal block under the cover.

Allocate communication address

- Recommendation: Continuous numbering starting with 1.
- Address range: 1 - 247.
- Procedure: Start according to the inverter’s instructions.

Procedure

1. Unscrew the side cover as shown in the inverter's instructions.
2. Connect the self-made RS-485 cable to the X4 terminal block on inverter 1.
3. Connect the self-made RS-485 cable to the X4 terminal block on inverter 2.
4. Connect the other inverters to each other in the same way.
5. Terminate in the last inverter according to the inverter instructions.
6. Screw the inverter cover on again.

5.2 ABB PRO-33TL

Termination	Addressing	Interface
Yes	Yes	RS485

Select “ABB-PRO-33TL” during device detection.

Overview

- Where to connect: X2 terminal block under the cover.
- Communication address must be allocated.
- 3-pin wiring.
- Installation steps.
  - Switch off the inverters and Solar-Log™.
  - Connect inverters to the Solar-Log™.
  - Connect the inverters to each other.

Connect inverters to the Solar-Log™

The wiring is done using a

- self-made cable connection.

Procedure

1. Unscrew the side cover as shown in the inverter‘s instructions.
2. If you are making the cable yourself, connect the wires as shown in the following diagram:

Solar-Log™ Base RS485 (A) / (B)	X2 terminal block inverter
Terminal	PIN
► (A) 6 or (B) 10 (Data+)	► 1 - Data+
► (A) 8 or (B) 12 GND	► 3 - GND
► (A) 9 or (B) 13 (Data-)	► 2 - Data-

3. If no further inverter is connected, terminate the inverter according to the instructions for the inverter.
4. Screw the inverter cover on again.

Connect the inverters to each other

- Where to connect: X2 terminal block under the cover.

Procedure

1. Unscrew the side cover as shown in the inverter‘s instructions.
2. Connect the self-made RS-485 cable to the X2 terminal block on inverter 1.
3. Connect the self-made RS-485 cable to the X2 terminal block on inverter 2.
4. Connect the other inverters to each other in the same way.
5. Terminate in the last inverter according to the inverter instructions.
6. Screw the inverter cover on again.

5.3 ABB Central Inverters

Termination	Addressing	Interface
No	Yes	Ethernet

Select “ABB: PVS Central” during device detection.

Supported models:

- PVS800-57-0100kW-A, PVS800-57-0250kW-A, PVS800-57-0315kW-B, PVS800-57-0500kW-A, PVS800-57-0630kW-B, PVS800-57-875KW, PVS800-57-1000KW-C

Overview

- Interface not integrated; Retrofit components (with the label "RETA-01").
- Connected using network cable (patch cable) and Ethernet router or switch.
- Communication address must be allocated.
- Installation steps:
  - Allocate communication address.
  - Connect inverters to the Solar-Log™ (RJ45).
  - Connect the inverters to each other (RJ45).

Allocate communication address

- Recommendation: Continuous numbering starting with 1; address range 1 to 254.
- Setting: Using the inverter display.
- Procedure: Before connecting to the Ethernet router or switch and allocating the IP address.

Connect inverters and the Solar-Log™.

The wiring is done using a

- network cable (patch cable) and the
- Ethernet router or switch.

Procedure

1. Set different unit IDs on each inverter in accordance with the inverter's instructions.
2. Connect the Solar-Log™ and the inverter to the router or switch.
3. Assign an IP address to every inverter. Assign the IP addresses according to the inverter's instructions.

The first three number blocks like the Solar-Log™, e.g. 192.168.178.49.
The fourth number block: an address that is available, e.g. 192.168.178.50.

5.4 ABB-Power-One/Aurora/PVI/TRIO/Ultra/UNO

Termination	Addressing	Interface
Switch	Yes	RS485

Select “ABB: PVI/TRIO/Ultra/UNO” during device detection.

Supported models:

- PVI 3.0, PVI-3.0-OUTD, PVI-3.0-TL-OUTD, PVI-3.6-OUTD, PVI-3.6-TL-OUTD, PVI-3.8-I-OUTD, PVI-4.2-OUTD, PVI-4.2-TL-OUTD, PVI-4.6-I-OUTD, PVI-6.0-OUTD, PVI 7.6, PVI 8.0 OUTD, PVI 8.6, PVI-10.0-I, PVI-10.0-I (output 208 VAC), PVI-10.0-OUTD, PVI-10.0-OUTD-I, PVI-10.0-TL-OUTD, PVI 10.0 TL OUTD-FS, PVI 10.0 TL OUTD-S, PVI-10.0-OUTD-I (208 VAC), PVI-10.0-I (output 600 VAC), PVI-10.0-I (output 480 VAC), PVI-10.0-OUTD-I (600 VAC), PVI-10.0-OUTD-I (output 480 VAC - current limit 12A), PVI-12.0-I, PVI-12.0-I (output 480 VAC), PVI-12.0-I (output 600 VAC), PVI-12.5-OUTD, PVI-12.5-OUTD-I, PVI-12.5-OUTD-I (600 VAC), PVI-12.5-TL-OUTD, PVI 12.5 TL OUTD-FS, PVI 12.5 TL OUTD-S, PVI 12.5 OUTD I (output 208 VAC), PVI 12.5 OUTD I (output 380 VAC), PVI-55 (TL), PVI-110 (TL), PVI-134-TL, PVI-165 (TL), PVI-200-TL, PVI-220 (TL), PVI-267-TL, PVI-275 (TL), PVI-330 (TL), PVI-334-TL, PVI-400-TL, PVI-5000-OUTD, PVI-5000-TL-OUTD, PVI-6000-OUTD, PVI-6000-OUTD-AU, PVI-6000-TL-OUTD
- PVI-Central 50, PVI-Central 100 (TL), PVI-Central 150 (TL), PVI-Central 200 (TL), PVI-Central 250 (TL), PVI-Central 300 (TL)
- TRIO-5.8-TL-OUTD, TRIO-7.5-TL-OUTD, TRIO-8.5-TL-OUTD, TRIO-20-TL-OUTD, TRIO 27.6-TL-OUTD, TRIO-50.0-TL-OUTD
- UNO-2.0-I-OUTD, UNO-2.0-TL-OUTD, UNO-2.5-I-OUTD, UNO-3.0-TL-OUTD, UNO-3.6-TL-OUTD, UNO-4.2-TL-OUTD

Overview

- Interface integrated.
  Sometimes different interfaces are used for indoor and outdoor models.
- Where to connect: RS485 terminal strips inside the inverter.
- 3-pin wiring.
- Communication address must be allocated.
- Installation steps:
  - Switch off the inverters and Solar-Log™.
  - Connect inverters to the Solar-Log™.
  - Connect the inverters to each other.
  - Allocate communication address.

Connect inverters to the Solar-Log™

The wiring is done using a

- self-made, shielded 3 wire data cable.

Procedure

1. Open the inverter as shown in the inverter's instructions.
2. Pull the free wires through the wire opening in the inverter.
3. If you are making the cable yourself, connect the wires as shown in the following diagram:

Solar-Log™ Base RS485 (A) / (B)	Inverter terminal strip (Outdoor)
Terminal	Terminal
► (A) 6 or (B) 10 (Data+)	► +T/R
► (A) 8 or (B) 12 GND	► GND
► (A) 9 or (B) 13 (Data-)	► -T/R

4. If no further inverter is connected, terminate the inverter:
   In the inverter, set the DIP switch for the terminal resistor to ON.
5. Close the inverter if no other inverters are to be connected.

Connect the inverters to each other

- Connect using a 3 pin, shielded data cable.
- Where to connect: RS485 terminal strips inside the inverter.

Procedure

1. Open the inverter as shown in the inverter's instructions.
2. Connect terminals +T/R, -T/R and RTN of inverter 1 to the corresponding terminals on inverter 2.
3. Connect the other inverters to each other in the same way.
4. Terminate in the last inverter.
   Set the DIP switch for the terminal resistor to ON.
5. Close inverters.

Allocate communication address

- Recommendation: Continuous numbering from Solar-Log™, starting from 2 (not 1!).
- Setting: Using the inverter display.
- Procedure: Start according to the inverter's instructions.

Procedure Ultra (Models: 700, 1050, 1400):

1. Open the inverter as shown in the inverter's instructions.
2. Pull the free wires through the wire opening in the inverter.
3. If you are making the cable yourself, connect the wires as shown in the following diagram:

Solar-Log™ Base RS485 (A) / (B)	Inverter terminal strip (Outdoor)
Terminal	Terminal
► (A) 6 or (B) 10 (Data+)	► +DATA MON
► (A) 8 or (B) 12 GND	► RTN_MON
► (A) 9 or (B) 13 (Data-)	► -DATA MON

4. If no further inverter is connected, terminate the inverter:
   In the inverter, set the DIP switch for the terminal resistor to ON.
5. Close the inverter if no other inverters are to be connected.

5.5 ABB - 50/60 (Sunspec via RS485)

Termination	Adressing	Interface
Switch	Yes	RS485

Select „ABB: Sunspec“ during device detection.

Supported models:

- TRIO-50.0-TL-OUTD (Sunspec), TRIO-50.0-TL-OUTD-US-480, TRIO-TM-50.0-400, TRIO-TM-60.0-480, TRIO-TM-60.0-480-US

Overview

- Integrated interface.
- Where to connect: RJ 45 socket, inside on the communication and control board of the inverter.
- 3-pin wiring.
- The communication address has to be assigned.
- Installation steps:
  - Switch off the inverters and the Solar-Log™.
  - Connect the inverters to the Solar-Log™.
  - Connect the inverters to each other.
  - Set the communication address according to the inverter‘s instructions.

Connect the inverters to the Solar-Log™

The wiring is done using a

- self-made RS485 data cable with RJ45 plug.



Caution

Risk of damage to the unit!
The Solar-Log™ also has an RJ45 socket, which must never be connected to the RJ45 socket on the inverter.

► Only connect inverters via the RS485/422 Solar-Log™ interface(s).

Procedure

1. Open the inverter as shown in the inverter‘s instructions.
2. If you are making the cable yourself, connect the wires as shown in the following diagram:



Note

The RS485-2 interfaces have to be used in order to communicate with the Solar-Log™. Do not use the RS481-1 interface. (Refer to the inverter‘s manual)

Solar-Log™ Base RS485 (A) / (B)	RJ45 inverter
Terminal	PIN
► (A) 6 or (B) 10 (Data+)	► 3+ T/R
► (A) 8 or (B) 12 GND	► 7 RTN
► (A) 9 or (B) 13 (Data-)	► 5- T/R

3. Insert the RJ45 plug into the RJ45 IN socket on the first inverter.
4. Terminate the inverter if no additional inverters are to be connected:
   Set the DIP switch for the terminal resistor to ON.
5. Close the inverter if no other inverters are to be connected.

Connect the inverters to each other

- Connect using the RS485 data cable with RJ45 plug;
  Connection cables between the inverters are supplied with the inverters. Use these.
- Where to connect: RJ45 socket on the inside of the inverter.

Procedure

1. Insert the RJ45 plug into the RJ45 Out socket on the first inverter.
2. Insert the other end of the cable into the RJ45 In socket on second inverter.
3. Connect the other inverters to each other in the same way.
4. Terminate the inverter if no additional inverters are to be connected:
   Set the DIP switch for the terminal resistor to ON.

Assign the communication address

1. Recommendation: Continuous numbering starting with 2.
   Address range 2 - 63.
2. Setting: Start according to the inverter's instructions.

Note

The inverter address settings are configured with the „Aurora Manager LITE" software. (Refer to the manufacturer's manual)

Note

The inverter has two RS485 communications ports. „Modbus" has to be defined as the protocol. The default protocol for both ports is „Aurora." This can be modified with the „Aurora Manager LITE" software.(Refer to the manufacturer's manual)

Note

The communication has to be terminated on both ends of the bus.

Note

The total length of the communication cable should not exceed 1000 meters.
A maximum of 62 inverters can be connected to one RS485 bus.

Note

The PM management of the inverter is deactivated by default. If the inverter is to be remotely managed, the PM management has to be activated with the „Aurora Manager LITE“ software. (Refer to the manufacturer‘s manual)

5.6 ABB - PVS 50-TL / 60-TL (Sunspec via RS485)

Termination	Addressing	Interface
Switch	Yes	RS485

Select „ABB: Sunspec“ during device detection.

Overview

- Integrated interface.
- Where to connect: RS485 terminal connector, inside on the communication and control board of the inverter.
- 3-pin wiring.
- The communication address has to be assigned.
- Installation steps:
  - Switch off the inverters and the Solar-Log™.
  - Connect the inverters to the Solar-Log™.
  - Connect the inverters to each other.
  - Set the communication address according to the inverter‘s instructions.

Connect the inverters to the Solar-Log™

The wiring is done using a

- self-made RS485 data cable.

Procedure

1. Open the inverter as shown in the inverter‘s instructions.
2. If you are making the cable yourself, connect the wires as shown in the following diagram:

Solar-Log™ Base RS485 (A) / (B)	Inverter RS485 Terminal connector
Terminal	PIN
► (A) 6 or (B) 10 (Data+)	► RS485 +T/R
► (A) 8 or (B) 12 GND	► RTN
► (A) 9 or (B) 13 (Data-)	► RS485 -T/R

3. Terminate the inverter if no additional inverters are to be connected:
   Set the DIP switch for the terminal resistor to ON.
4. Close the inverter if no other inverters are to be connected.

Connect the inverters to each other

- Where to connect: RS485 terminal block, inside on the communication and control board of the inverter.
- 3-pin wiring.

Procedure

1. Open the inverter as shown in the inverter's instructions.
2. If you are making the cable yourself, connect the wires as shown in the following diagram:

Inverter RS485 Terminal connector	Inverter RS485 Terminal connector
PIN	PIN
► RS485 +T/R	► RS485 +T/R
► RTN	► RTN
► RS485 -T/R	► RS485 -T/R

3. Connect the terminals of inverter 1 and the corresponding terminals of inverter 2 (according to inverter instructions).
4. Weitere Wechselrichter untereinander auf die gleiche Art verbinden.
5. Connect the other inverters to each other in the same way.
6. Terminate the last inverter.
   Set the DIP switch for the terminal resistor to ON.
7. Close inverters.

Assign the communication address

1. Recommendation: Continuous numbering starting with 2.
   Address range 2 - 63.
2. Setting: Start according to the inverter's instructions.

Note

The inverter address is set via the integrated WEB user interface of the inverter. (See manufacturer's manual).

Note

The communication has to be terminated on both ends of the bus.

Note

The total length of the communication cable should not exceed 1000 meters.
A maximum of 62 inverters can be connected to one RS485 bus.

Note

The PM management of the inverter is deactivated by default. If the inverter is to be controlled remotely, the PM management must be activated via the integrated WEB user interface of the inverter. (See manufacturer's manual).

5.7 ABB - PVS 100-TL / 120-TL / 175-TL (Sunspec via RS485)

Termination	Addressing	Interface
Switch	Yes	RS485

Select „ABB: Sunspec“ during device detection.

Overview

- Integrated interface.
- Where to connect: RS485 terminal block, inside on the communication and control board of the inverter.
- 3-pin wiring.
- The communication address has to be assigned.
- Installation steps:
  - Switch off the inverters and the Solar-Log™.
  - Connect the inverters to the Solar-Log™.
  - Connect the inverters to each other.
  - Set the communication address according to the inverter‘s instructions.

Connect the inverters to the Solar-Log™

The wiring is done using a

- self-made RS485 data cable.

Procedure

1. Open the inverter as shown in the inverter‘s instructions.
2. If you are making the cable yourself, connect the wires as shown in the following diagram:

Solar-Log™ Base RS485 (A) / (B)	Inverter RS485 Terminal block
Terminal	Terminal
► (A) 6 or (B) 10 (Data+)	► 485+
► (A) 8 or (B) 12 GND	► RTN
► (A) 9 or (B) 13 (Data-)	► 485-

3. Terminate the inverter if no additional inverters are to be connected:
   Set the DIP switch for the terminal resistor to ON.
4. Close the inverter if no other inverters are to be connected.

Connect the inverters to each other

- Where to connect: RS485 terminal block, inside on the communication and control board of the inverter.
- 3-pin wiring.

Procedure

1. Open the inverter as shown in the inverter's instructions.
2. If you are making the cable yourself, connect the wires as shown in the following diagram:

Inverter RS485 Terminal block	Inverter RS485 Terminal block
Terminal	Terminal
► 485+	► 485+
► RTN	► RTN
► 485-	► 485-

3. Connect the terminals of inverter 1 and the corresponding terminals of inverter 2 (according to inverter instructions).
4. Weitere Wechselrichter untereinander auf die gleiche Art verbinden.
5. Connect the other inverters to each other in the same way.
6. Terminate the last inverter.
   Set the DIP switch for the terminal resistor to ON.
7. Close inverters.

Assign the communication address

1. Recommendation: Continuous numbering starting with 2.
   Address range 2 - 63.
2. Setting: Start according to the inverter's instructions.

Note

The inverter address is set via the integrated WEB user interface of the inverter. (See manufacturer's manual).

Note

The communication has to be terminated on both ends of the bus.

Note

The total length of the communication cable should not exceed 1000 meters.
A maximum of 62 inverters can be connected to one RS485 bus.

Note

The PM management of the inverter is deactivated by default. If the inverter is to be controlled remotely, the PM management must be activated via the integrated WEB user interface of the inverter. (See manufacturer's manual).

5.8 ABB - Sunspec via Ethernet

Termination	Addressing	Interface
No	Yes	Ethernet

Select „ABB: Sunspec“ during device detection.

Supported models:

- UNO-DM-1.2-TL-PLUS, UNO-DM-2.0-TL-PLUS, UNO-DM-3.3-TL-PLUS-US, UNO-DM-3.8-TL-PLUS, UNO-DM-3.8-TL-PLUS-US, UNO-DM-4.0-TL-PLUS, UNO-DM-4.6-TL-PLUS, UNO-DM-5.0-TL-PLUS, UNO-DM-6.0-TL-PLUS, UNO-DM-6.0-TL-PLUS-US

Overview

- Integrated interface.
- The IP address for the inverter has to be either assigned via DHCP or a static IP has to be assigned.
- Connected using network cable (patch cable) and Ethernet router.
- Installation steps:
  - Turn the Solar-Log™ off.
  - Turn the inverters off.
  - Connect inverters to the router.
  - Connect the Solar-Log™ to the router.

Connect the inverters to the Solar-Log™

- The wiring is done using a network cable (patch cable) and the Ethernet router.

Connect the inverters to each other

The inverters are connected together using the RJ45 interface and, if needed, a router.
Follow the connection setup according to the inverter‘s instructions.

Assigning IP addresses

- In addition to a static, fixed IP, a dynamic IP address can also be assigned.
- Please select an IP address with the same class C subnet as the Solar-Log™.
- Example: The Solar-Log™ has the IP address 192.168.178.49.
- The inverter in this case has to have a free IP address in the same range (from 192.168.178.1 to 192.168.178.254).
- Procedure: Start according to the inverter‘s instructions.

*Dynamic IP address (DHCP) for detection and communication:

The Solar-Log™, inverter and router have to be set to obtain their IP addresses automatically (DHCP) and be in the same class C subnet.

Note

The setting „ModTCP Server“ has to be activated in the inverter in order to be able to communicate with Sunspec-Ethernet. This setting cannot be adjusted via the inverter‘s display. The inverter has to be adjusted via a device with a wireless function. More information below under „Setting up the Inverter.“

Setting up the Inverter:

A device with a wireless function such as a laptop, tablet or smartphone is required to set up and configure the inverter.

The following steps are necessary:

- Connect the inverter to a power outlet.
- Activate the wireless function of the device used.
- Connect the device to the inverter's access point (a network with the name ABB-XX-XX-XX-XX-XX-XX appears in the last, the Xs are the hexadecimal number of the MAC address (the MAC address is printed on the wireless identification label on the side of the inverter).
- Enter „ABBSOLAR" as the password for the inverter's access point.
- Open the internet browser and enter the IP address to access the configuration wizard menu: 192.168.117.1 (default address that is always active).
- The configuration wizard starts.
- Refer to the inverter's installation manual for the next steps.

Note

Please also note the instructions the inverter's installation manual of the inverter for the set up and configuration!

Detection via the Solar-Log™ WEB Interface

- For detection on the Solar-Log™, select the device class under the menu Configuration | Device | Definition | Interface with the plus symbol and then select ABB as the manufacturer, Sunspec as the type and the interface. Confirm your selection with OK.
- Save your selections and then start the Device Detection under Configuration | Device | Detection and start the device detection.

6 Advanced Energy

6.1 Advanced Energy - AE-1

Termination	Addressing	Interface
Switch	Yes	RS485

Select „Steca: Standard" during device detection.

Supported models:

- AE 1TL 1.8, AE 1TL 2.3, AE 1TL 3.0, AE 1TL 3.6, AE 1TL 4.2

Overview

- Integrated interface.
- Where to connect: RJ socket, on the outside of the inverter's interface board.
- 2-pin wiring.
- Communication address must be allocated.
- Installation steps:
  - Switch off the inverters and Solar-Log™.
  - Connect inverters to the Solar-Log™.
  - Connect the inverters to each other.
  - Allocate communication address.

Connect inverters to the Solar-Log™

The wiring is done using a

- self-made RS485 data cable with RJ45 plug.



Caution

Risk of damage to the unit!
The Solar-Log™ also has an RJ45 socket, which must never be connected to the RJ45 socket on the inverter.

► Only connect inverters via the RS485/422 Solar-Log™ interface(s).

Procedure

1. If you are making the cable yourself, connect the wires as shown in the following diagram:

Solar-Log™ Base RS485 (A) / (B)	RJ45 inverter
Terminal	PIN
► (A) 6 or (B) 10 (Data+)	► 1
► (A) 9 or (B) 13 (Data-)	► 2

2. Insert the RJ45 plug into any RJ45 socket on the first inverter.
3. If no further inverter connected, terminate the inverter:
   On the inverter insert the connection plug into the free RJ45 socket.

Connect the inverters to each other

- Connect using the RS485 data cable with RJ45 plug;
  Connection cables between the inverters are supplied with the inverters. Use these.
- Where to connect: RJ45 socket on the outside of the inverter.

Procedure

1. Insert the RJ45 plug into the free RJ45 socket on the first inverter.
2. Insert the other end of the wire into any RJ45 socket on inverter 2.
3. Connect the other inverters to each other in the same way.
4. Terminate the last inverter.
   Insert the connection plug into the free RJ45 socket.

Allocate communication address

1. Recommendation: Continuous numbering starting with 1.
2. Setting: Using the rotating switch on the inverter interface board.
3. Procedure: Start according to the inverter's instructions.



Note

Please also note the instructions the inverter's installation manual of the inverter for the set up and configuration!

6.2 Advanced Energy - AE-3

Termination	Addressing	Interface
Terminating plug	Yes	RS485

Select “RefuSol. Native” during device detection.

Supported models:

- AE 3TL 8-IEC, AE 3TL 10-IEC, AE 3TL 12-UL, AE 3TL 13-IEC, AE 3TL 16-UL, AE 3TL 17-IEC, AE 3TL 20-IEC, AE 3TL 20-JP, AE 3TL 20-UL, AE 3TL 22K-JP, AE 3TL 23-IEC, AE 3TL 23-UL, AE 3TL 24-JP, AE 3TL 40-IEC, AE 3TL 46-IEC

Overview

- Integrated interface.
- Where to connect: RJ45 socket on the bottom of the inverter.
- 2-pin wiring.
- Communication address must be allocated.
- Installation steps:
  - Switch off the inverters and Solar-Log™.
  - Connect inverters to the Solar-Log™.
  - Connect the inverters to each other.
  - Allocate communication address.

Connect inverters to the Solar-Log™

The wiring is done using a

- self-made, shielded 2 wire data cable.

Procedure

1. Connect wires as shown in the diagram below.

Solar-Log™ Base RS485 (A) / (B)	RS485 inverter socket
Terminal	PIN
► (A) 6 or (B) 10 (Data+)	► 2 RS485+
► (A) 9 or (B) 13 (Data-)	► 3 RS485-

2. If no further inverter is connected, terminate the inverter:
   On the sockets „RS485 OUT“ with REFUSOL round plugs bypass the connections PIN1 to PIN2 and PIN3 to PIN4.
3. Close the inverter if no other inverters are to be connected.

Connect the inverters to each other

- Connect using
  - 2-wire, shielded data cable and.
  - 4-pin „SACC-M12MS-4SC“ plug (two plugs included with the inverter).
- Where to connect: RS485 sockets on the bottom of the inverter.

The RS485 IN and OUT sockets are each double connections so that the wiring can be continued to the next inverter.

Procedure

1. Connect the data cable to the „SACC-M12MS-4SC“ plug as shown in the inverter‘s instructions.
2. Insert one plug into the OUT (X14B) socket of inverter 1.
3. Insert the other end of the wire into the IN socket (X15B) on inverter 2.
4. Connect the other inverters to each other in the same way.
5. Terminate the last inverter.
   On the sockets „RS485 OUT“ with REFUSOL round plugs bypass the connections PIN1 to PIN2 and PIN3 to PIN4.
6. Close inverters.

Allocate communication address

- Recommendation: Continuous numbering starting with 1; highest possible address: 31.

Set the following parameters on the inverter‘s display:

1. Press „F1“, select Numerical list, press „ENTER“.
2. Set parameter number 2000 [password protection],
   press „ENTER“ twice.
3. Enter 72555, press „ENTER“.
4. Set parameter number 0406, press „ENTER“.
5. Select sub parameter 0406,3, press „ENTER“.
6. Enter figure for communication x.
   [x = continuous numbering starting with 1; highest possible address: 31], press „ENTER“. 31], press „ENTER“.

After configuring on the display:

1. Using the installed DC isolating switch turn the inverters on and off briefly so that the settings are activated.
2. Set the date and time on the inverter as shown in the inverter instructions.

Allocate communication address

- Recommendation: Continuous numbering starting with 1.
- Setting: Using the inverter display.
- Procedure: Start according to the inverter‘s instructions.

Note

To use active and reactive power management, all of the inverters need to be set to:

- ► Protocol 1
- ► 57600 baud
- ► Parameter 1164 = 2

Note

Please also note the instructions the inverter‘s installation manual of the inverter for the set up and configuration!

6.3 Advanced Energy - AE-TX

Termination	Addressing	Interface
Jumper	Yes	RS485

Select “PVPowered” during device detection.

Supported models:

- AE 100TX, AE 250TX, AE 260TX, AE 500TX

Overview

- Integrated interface.
- Where to connect: Modbus Slave socket on interface board.
- 3-pin wiring.
- Communication address must be allocated.
- Installation steps:
  - Switch off the inverters and Solar-Log™.
  - Connect inverters to the Solar-Log™.
  - Set the address of the inverters.
  - Connect the inverters to each other.

Connect inverters to the Solar-Log™

The wiring is done using a

- self-made 3 pin connection cable.

Note

The transfer rate for Modbus (RS485) on delivery to the customer is set to 9600bps. Please check these settings.

Procedure

1. Open the inverter as shown in the inverter‘s instructions.
2. Pull the free wires through the wire opening in the inverter.
3. If you are making the cable yourself, connect the wires as shown in the following diagram:

Solar-Log™ Base RS485 (A) / (B)	RJ45 inverter
Terminal	PIN
► (A) 6 or (B) 10 (Data+)	► 2 - D+
► (A) 8 or (B) 12 GND	► 1 - GND
► (A) 9 or (B) 13 (Data-)	► 3 - D-

4. If no further inverter connected, terminate the inverter.
   Inside the inverter set the supplied jumper from „J4“ to „J5“.
5. Setting the address for the inverter: Set SW1 to „0“ and SW2 to „1“ in order to set the parameters for the inverter with the address „01“.
6. Close the inverter if no other inverters are to be connected.

Connect the inverters to each other

The wiring is done using a

- self-made connection cable and terminal block connector.
- Where to connect: Terminal strip inside the inverter.

Procedure

1. Open the inverter as shown in the inverter's instructions.
2. Pull the free wires through the wire opening in the inverter.
3. Connect terminals GND, D+ and D- of inverter 1 to the corresponding terminals on inverter 2.
4. Connect the other inverters to each other in the same way.
5. Terminate the last inverter according to the inverter instructions.
   Inside the inverter set the supplied jumper from „J4" to „J5".
6. Address the individual inverters in accordance with the manufacturer's handbook: Inverter 1 should be the inverter that is directly connected to the Solar-Log™. To this end, set SW1 to „0". Depending on the position of the inverter in the bus, SW2 should be set to 1-9.
   If more than 9 inverters are to be connected to one Solar-Log™, please read the manufacturer's instructions for further information.
7. Close the inverter if no other inverters are to be connected.
8. Insert the terminal block connector into the Solar-Log™ RS485 socket.

Note

Please also note the instructions the inverter's installation manual of the inverter for the set up and configuration!

7 AEG

7.1 AEG PS

Termination	Addressing	Interface
Yes	No	RS422

Select “AEG: Protect PV (PS)” during device detection.

Supported models:

- PROTECT PV10 (2007), PV1500, PV2000, PV2800, PV4600

Overview

- Interface not integrated; Retrofit RS485 interface board.
- 4-pin cable – only at the RS422 interface.
- Communication address does not have to be assigned.
- Multi-string technology.

AEG inverters are fitted with 1 or 3 MPP trackers depending on the model. Each string input is monitored separately and ideally adjusted to the connected modules.

The Solar-Log™ automatically detects how many inverters and strings are active during inverter detection.

Note

The order in which the inverters are displayed in the Solar-Log™ after detection is random. We strongly recommend that you change the order of the inverters immediately after detection at startup, in the Configuration | Devices | Configuration | Order dialog box.

► The inverters can be identified using the displayed serial number.

- Installation steps:
  - Switch off the inverters and Solar-Log™.
  - Install the RS485 interface in the inverter.
  - Connect inverters to the Solar-Log™.
  - Connect the inverters to each other.

Installing the RS485 interface

Procedure

► Insert the RS485 interface in the bottom of the inverter in accordance with the interface board installation instructions and screw in.

Connect inverters to the Solar-Log™

The wiring is done using a

- self-made, shielded 4 wire data cable.

Note

Only connect inverter using the RS422 interface.

Procedure

1. Open the inverter as shown in the inverter's instructions.
2. Pull the free wires through the wire opening in the inverter.
3. If you are making the cable yourself, connect the wires as shown in the following diagram:

Solar-Log™ Base RS422	Inverter terminal strip
Terminal	Terminal
► 6 (T/RX+)	► R+
► 9 (T/RX-)	► R-
► 10 (R/TX+)	► T+
► 13 (R/TX-)	► T-

4. If no further inverter is connected, terminate the inverter according to the instructions for the inverter.
5. Close the inverter if no other inverters are to be connected.

Connect the inverters to each other

- Connect using a 4 wire, shielded data cable.
- Where to connect: Terminal strip inside the inverter (on the retrofitted RS485 interface).

Procedure

1. Open the inverter as shown in the inverter's instructions.
2. Connect terminals R+, R-, T+ and T“ of inverter 1 to the corresponding terminals on inverter 2.
3. Connect the other inverters to each other in the same way.
4. Terminate the last inverter according to the inverter instructions.
5. Close inverters.

Note

Please also note the instructions the inverter‘s installation manual of the inverter for the set up and configuration!

7.2 AEG Protect

Termination	Addressing	Interface
Terminating plug	No	RS485

Select “AEG: Protect PV (3PH)” during device detection.

Supported models:

- Protect PV 8, Protect PV 10, Protect PV 12.5, Protect PV 15

Overview

- Where to connect: 2 RJ45 sockets on the right on the side cover.
- Communication address does not have to be assigned.
- 4-pin wiring.
- Installation steps:
  - Switch off the inverters and Solar-Log™.
  - Connect inverters to the Solar-Log™.
  - Connect the inverters to each other.

Connect inverters to the Solar-Log™

The wiring is done using a

- self-made cable connection with RS485 data cable.

Procedure

1. Unscrew the side cover as shown in the inverter's instructions.
2. If you are making the cable yourself, connect the wires as shown in the following diagram:

Solar-Log™ Base RS485 (A) / (B)	RJ45 inverter
Terminal	PIN
► (A) 6 or (B) 10 (Data+)	► 6
► (A) 8 or (B) 12 GND	► 1
► (A) 8 or (B) 12 GND	► 2
► (A) 9 or (B) 13 (Data-)	► 3



Caution

Risk of damage to the unit!
The Solar-Log™ also has an RJ45 socket, which must never be connected to the RJ45 socket on the inverter.

► Only connect inverters via the RS485/422 Solar-Log™ interface(s).

3. If no further inverter connected, terminate the inverter:
   Insert the supplied connection plug into any free RJ45 socket on the inverter.
   The connection plug is an 8-pin dummy plug with bridged wires: Bridge wires 3 and 4 and wires 5 and 6.
4. Screw the inverter cover on again.
5. Insert the terminal block connector into the Solar-Log™ RS485 socket.

Connect the inverters to each other

- Connect using a network cable (patch cable).
- Where to connect: 2 RJ45 sockets on the right on the side cover.

Procedure

1. Unscrew the side cover as shown in the inverter's instructions.
2. Insert the RJ45 plug into any RJ45 socket on inverter 1.
3. Insert the other end of the wire into any RJ45 socket on inverter 2.
4. Connect the other inverters to each other in the same way.
5. Terminate the last inverter.
   Insert the connection plug into the free RJ45 socket.
6. Screw the inverter cover on again.



Note

Please also note the instructions the inverter‘s installation manual of the inverter for the set up and configuration!

8 Albatech

8.1 Albatech APL Trifase 15 / 20

Termination	Addressing	Interface
Jumper	Yes	RS485

Select „Albatech: Trifase“ during device detection.

Inverters from different Albatech model ranges (APL monophase / triphase) cannot be mixed on an RS485 connection. The correct range must be selected when selecting inverters.

Overview

- Integrated interface.
- Where to connect: Terminal strip inside the inverter.
- 3-pin wiring.
- Communication address must be allocated.
- Installation steps:
  - Allocate communication address.
  - Switch off the inverters and Solar-Log™.
  - Connect inverters to the Solar-Log™.
  - Connect the inverters to each other.

Note

If more than 32 inverters are connected a signal amplifier must be installed in the RS485 bus in accordance with the manufacturer.

Connect inverters to the Solar-Log™

The wiring is done using a

- self-made, shielded 3 wire data cable.

It is connected to the inverter as shown in the following diagram. The inverters are terminated on pin 9/10 of J1. Both the first and also the last inverter must be terminated.

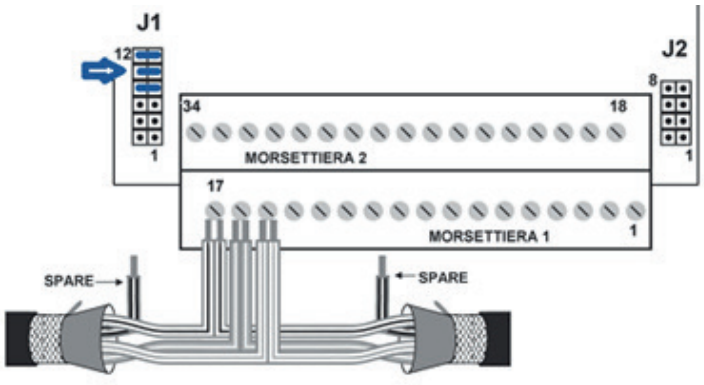

Fig.: Albatech APL block connector (Source: Albatech)

Procedure

1. Switch off the inverters and Solar-Log™.
2. Unscrew the side cover as shown in the inverter's instructions.
3. Pull the free wires through the wire opening in the inverter.
4. If you have made the cable connection yourself, connect the wires as shown in the following diagram:

Solar-Log™ Base RS485 (A) / (B)	Inverter terminal strip
Terminal	PIN
► (A) 6 or (B) 10 (Data+)	► 15 (RS485 +)
► (A) 8 or (B) 12 GND	► 17 GND
► (A) 9 or (B) 13 (Data-)	► 16 (RS485 -)

5. Connect data cable to RS485+, RS485- and grounded terminals.
6. If no further inverter is connected, terminate the inverter:
   To terminate set the jumper at J1 to pins 9 and 10.
7. Screw the inverter cover on again.

Connect the inverters to each other

The wiring is done using a

- self-made, shielded 3 wire data cable.
- Where to connect: Terminal strip inside the inverter.

Procedure

1. Switch off the inverters and Solar-Log™.
2. Unscrew the side cover as shown in the inverter's instructions.
3. Connect data cable to RS485+, RS485- and grounded terminals.
4. Connect the other inverters to each other in the same way.
5. Terminate on the first and last inverters.
6. Set the jumper at J1 to pins 9 and 10.
7. Screw the inverter cover on again.

Allocate communication addresses

Before the inverters can be detected addresses must be allocated to them. To do this you must connect to the unit either via the Ethernet or RS232. You will find details on this procedure in the inverter's handbook. Now set another address (1 - 247) from the modbus parameters for each inverter and leave the baud rate at 19200 bit/s.

8.2 Albatech APL Monofase

Termination	Addressing	Interface
Jumper	Yes	RS485

Select „Albatech: Monofase“ during device detection.

Supported models:

- APL Monofase 2.0/3.0/4.0/5.0

Inverters from different Albatech model ranges (APL monophase / triphase) cannot be mixed on an RS485 connection. The correct range must be selected when selecting inverters.

Overview

- Interface not integrated; Upgrade the Albatech RS485 interface.
- 3-pin wiring.
- Communication address must be allocated.
- Installation steps:
  - Switch off the inverters and Solar-Log™.
  - Install the RS485 interface in the inverter.
  - Connect inverters to the Solar-Log™.
  - Connect the inverters to each other.
  - Allocate communication address.

Installing the RS485 interface

Procedure

► Install the RS485 interface in the inverter in accordance with the interface board installation instructions.

Connect inverters to the Solar-Log™

The wiring is done using a

- self-made, shielded 3 wire data cable.

Procedure

1. Open the inverter as shown in the inverter‘s instructions.
2. If you are making the cable yourself, connect the wires as shown in the following diagram:

Solar-Log™ Base RS485 (A) / (B)	Inverter terminal strip
Terminal	Terminal
► (A) 6 or (B) 10 (Data+)	► Pin 2 - D+
► (A) 8 or (B) 12 GND	► Pin 3 - GND
► (A) 9 or (B) 13 (Data-)	► Pin 1 - D-

3. If no further inverter connected, terminate the inverter:
   Set the jumper on the RS485 interface board to ON.
4. Close the inverter if no other inverters are to be connected.

Connect the inverters to each other

- Connect using a 3 wire, shielded data cable.
- Where to connect: on the upgraded RS485 interface.

Procedure

1. Open the inverter as shown in the inverter‘s instructions.
2. Using the data cable connect terminals „Pin 2-RS485-A (+)“, „Pin 3-GND“ and „Pin 1-RS485-B (-)“ of inverter 1 to the corresponding terminals on inverter 2.
3. Connect the other inverters to each other in the same way.
4. Terminate the last inverter.
5. Set the jumper on the RS485 interface board to ON.
6. Close inverters.

Allocate communication address

- Recommendation: Continuous numbering starting with 1.
- Setting: Using the inverter display.
- Procedure: Start according to the inverter‘s instructions.

9 ALPHA-SOL

9.1 ALPHA-SOL

Termination	Addressing	Interface
Switch	Yes	RS485

Select „ALPHA-SOL“ during device detection.

Supported models:

- AlphaSol 2000, AlphaSol 3000, AlphaSol 4000

Overview

- Interface not integrated; Retrofit RS485 interface board.
- 4-pin wiring.
- Communication address must be allocated.
- Installation steps:
  - Allocate communication address.
  - Switch off the inverters and Solar-Log™.
  - Install the RS485 interface in the inverter.
  - Connect inverters to the Solar-Log™.
  - Connect the inverters to each other.

Allocate communication address

- Recommendation: Continuous numbering starting with 1.
- Setting: Using the DIP switch on the interface board.

Before installing the RS485 interface board:

► Allocate the communication address using the 8 interface board DIP switches:

Example - Communication address 1:

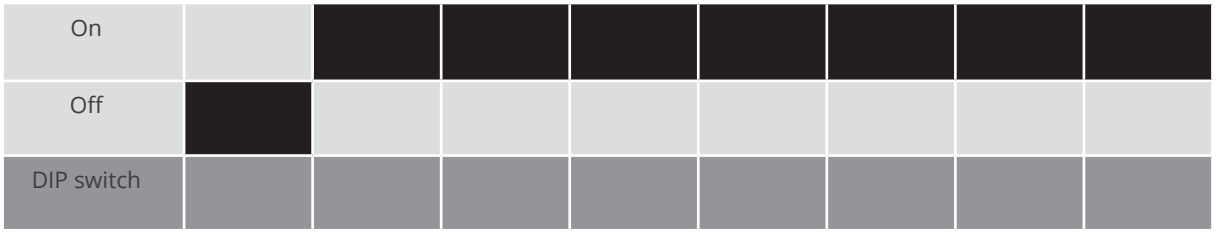

Example - Communication address 2:



Example - Communication address 3:



Example - Communication address 4:



Example - Communication address 5:



You will find more information at:
http://en.wikipedia.org/wiki/Binary_number

Installing the RS485 interface

Procedure

► Install the RS485 interface in the inverter in accordance with the interface board installation instructions.

Connect inverters to the Solar-Log™

The wiring is done using a

- self-made, shielded 4 wire data cable.

Procedure

1. Open the inverter as shown in the inverter's instructions.
2. Pull the free wires through the wire opening in the inverter.
3. If you are making the cable yourself, connect the wires as shown in the following diagram:

Solar-Log™ Base RS485 (A) / (B)	Inverter terminal strip
Terminal	Terminal
► (A) 6 or (B) 10 (Data+)	► R+
► (A) 6 or (B) 10 (Data+)	► T+
► (A) 9 or (B) 13 (Data-)	► R-
► (A) 9 or (B) 13 (Data-)	► T-

4. If no further inverter is connected, terminate the inverter according to the instructions for the inverter.
5. Close the inverter if no other inverters are to be connected.

Connect the inverters to each other

- Connect using a 4 wire, shielded data cable.
- Where to connect: Terminal strip inside the inverter on the retrofitted RS485 interface board.

Procedure

1. Open the inverter as shown in the inverter's instructions.
2. Connect terminals R+, T+, R- and R+ of inverter 1 to the corresponding terminals on inverter 2.
3. Connect the other inverters to each other in the same way.
4. Terminate in the last inverter according to the inverter instructions.
5. Close inverters.

10 AROS Solar Technology

10.1 AROS Solar Technology (RS422)

Termination	Addressing	Interface
Yes	No	RS422

Select "AROS: SIRIO RS422" during device detection.

Supported models:

- SIRIO 1500, SIRIO 2000, SIRIO 2800, SIRIO 3100, SIRIO 4000, SIRIO 12000

Overview

- Integrated interface.
- Where to connect: Terminal strip inside the inverter.
- 4-pin cable - only at the RS422 interface.
- Communication address does not have to be assigned.

Note

The order in which the inverters are displayed in the Solar-Log™ after detection is random. We strongly recommend that you change the order of the inverters immediately after detection at startup in the Configuration | Device | Configuration | Order menu box.

► The inverters can be identified using the displayed serial number.

- Installation steps:
  - Switch off the inverters and Solar-Log™.
  - Connect inverters to the Solar-Log™.
  - Connect the inverters to each other.

Connect inverters to the Solar-Log™

The wiring is done using a

- self-made cable connection.

Note

Only connect inverter using the RS422 interface.

Procedure

1. If you are making the cable yourself, connect the wires as shown in the following diagram:

Solar-Log™ Base RS422	Inverter terminal strip
Terminal	PIN
► 6 (T/RX+)	► R+
► 9 (T/RX-)	► R-
► 10 (R/TX+)	► T+
► 13 (R/TX-)	► T-

2. If no further inverter is connected, terminate the inverter according to the instructions for the inverter.

Connect the inverters to each other

- Connect using a 4 wire, shielded data cable.
- Where to connect: Terminal strip inside the inverter.

Procedure

1. Open the inverter as shown in the inverter's instructions.
2. Connect terminals R+, R-, T+ and T- of inverter 1 to the corresponding terminals on inverter 2.
3. Connect the other inverters to each other in the same way.
4. Terminate in the last inverter according to the inverter instructions.
5. Close inverters.



Note

Please also note the instructions the inverter‘s installation manual of the inverter for the set up and configuration!

10.2 AROS Solar Technology (RS485)

Termination	Addressing	Interface
Yes	No	RS485

Select "AROS: SIRIO RS485" during device detection.

Supported models:

- SIRIO 1500, SIRIO 2000, SIRIO 2800, SIRIO 3100, SIRIO 4000, SIRIO 12000, SIRIO 15000, SIRIO 18000, SIRIO 25000, SIRIO 33000, SIRIO 40000, SIRIO 50000, SIRIO 64000, SIRIO 80000, SIRIO 100000, SIRIO 200000, SIRIO 250000, SIRIO 330000, SIRIO 500000, SIRIO K12, SIRIO K15, SIRIO K18, SIRIO K25, SIRIO K33, SIRIO K40, SIRIO K64, SIRIO K80, SIRIO K100, SIRIO K200, SIRIO EASY 1500, SIRIO EASY 2000, SIRIO EASY 3000, SIRIO EASY ST 3K, SIRIO K25 HV, SIRIO K33 HV, SIRIO K40 HV, SIRIO K64 HV, SIRIO K80 HV, SIRIO K100 HV, SIRIO K200 HV, SIRIO K200 HV-MT, SIRIO K250 HV-MT, SIRIO K500 HV-MT, SIRIO K330 HV-MT, SIRIO 4000P, SIRIO 4600P, SIRIO 6000P, SIRIO 10000P, SIRIO EVO 1500, SIRIO EVO 2000, SIRIO EVO 3000, SIRIO EVO 4000, SIRIO EVO 5000, SIRIO EVO 6000, SIRIO EVO 10000, SIRIO EVO 12500

Overview

- Integrated interface.
- Where to connect: Terminal strip inside the inverter.
- 3-pin wiring.
- Communication address does not have to be assigned.

Note

The order in which the inverters are displayed in the Solar-Log™ after detection is random. We strongly recommend that you change the order of the inverters immediately after detection at startup in the Configuration | Device | Configuration | Order menu box.

► The inverters can be identified using the displayed serial number.

- Installation steps
  - Switch off the inverters and Solar-Log™.
  - Connect inverters to the Solar-Log™.
  - Connect the inverters to each other.

Connect inverters to the Solar-Log™

The wiring is done using a

- self-made cable connection.

Procedure

1. If you are making the cable yourself, connect the wires as shown in the following diagram:

Solar-Log™ Base RS485 (A) / (B)	RJ45 inverter
Terminal	PIN
► (A) 6 or (B) 10 (Data+)	► A (+)
► (A) 8 or (B) 12 GND	► GND
► (A) 9 or (B) 13 (Data-)	► B (-)

2. If no further inverter is connected, terminate the inverter according to the instructions for the inverter.

Connect the inverters to each other

- Connect using a 3 wire, shielded data cable.
- Where to connect: Terminal strip inside the inverter.

Procedure

1. Open the inverter as shown in the inverter's instructions.
2. Connect terminals A+, GND and B- on inverter 1 to the corresponding terminals on inverter 2.
3. Connect the other inverters to each other in the same way.
4. Terminate the last inverter according to the inverter instructions.
5. Close inverters.



Note

Some of the models listed require an RS485 communication card for communication. Please observe the manufacturer‘s instructions and information!



Note

Please also note the instructions the inverter‘s installation manual of the inverter for the set up and configuration!

11 Astronergy

11.1 Astronergy

Termination	Addressing	Interface
-	Yes	RS485

Select „Astronergy“ during device detection.

Supported models:

- CHPI 1.5KTL, CHPI 2KTL, CHPI 3KTL, CHPI 4KTL, CHPI 4.4KTL, CHPI 5KTL, CHPI 10KTL, CHPI 12KTL, CHPI 18KTL, CHPI 20KTL, CHPI 3KTL-US, CHPI 4KTL-US, CHPI 5KTL-US, CHPI 6KTL-US, CHPI 14KTL-US, CHPI 20KTL-US, CHPI 1.5KTL-AS, CHPI 2KTL-AS, CHPI 3KTL-AS, CHPI 5KTL-AS, CHPI 3.6KTL-M2, CHPI 4.2KTL-M2, CHPI 5KTL-M2

Overview

- Integrated interface.
- Where to connect: Round sockets on the outside of the inverter.
- 2-pin wiring.
- Communication address must be allocated.
- Installation steps:
  - Switch off the inverters and Solar-Log™.
  - Connect inverters to the Solar-Log™.
  - Connect the inverters to each other.
  - Allocate communication address.

Connect inverters to the Solar-Log™

The wiring is done using a

- self-made, shielded 2 wire data cable with round plug.
- The round plugs required can be obtained from the inverter manufacturer.

Procedure

1. If you are making the cable yourself, connect the wires as shown in the following diagram:

Solar-Log™ Base RS485 (A) / (B)	Inverter round socket
Terminal	PIN
► (A) 6 or (B) 10 (Data+)	► 2 (+)
► (A) 9 or (B) 13 (Data-)	► 1 (-)

2. Insert the round plug into any COM round socket on the inverter.

Connect the inverters to each other

- Wiring using 2 pin cable with round plugs.
- Where to connect: Round sockets on the outside of the inverter.

Procedure

1. Insert the round plug into any round socket on inverter 1.
2. Insert the other end of the cable into any round socket on inverter 2.
3. Connect the other inverters to each other in the same way.

Allocate communication address

- Recommendation: Continuous numbering starting with 1.
- Address range: 1 - 125.
- Setting: Using the inverter display.
- Procedure: Start according to the inverter's instructions.

12 Aten

12.1 Aten

Termination	Addressing	Interface
-	No	RS485

Select „Aten“ during device detection.

Supported models:

- A-Verter-1750TL, A-Verter-2330TL, A-Verter-3180TL, A-Verter-4600TL, A-Verter-5200TL

Overview

- Integrated interface.
- Where to connect: RJ14 socket on the outside of the inverter.
- 2-pin wiring.
- Communication address does not have to be assigned.

Installation steps

- Switch off the inverters and Solar-Log™.
- Connect inverters to the Solar-Log™.
- Connect the inverters to each other.

Connect inverters to the Solar-Log™

The wiring is done using a
self-made, shielded 2 wire data cable.

Procedure

1. If you are making the cable yourself, connect the wires as shown in the following diagram

Solar-Log™ Base RS485 (A) / (B)	Inverters
Terminal	RJ 14 socket
► (A) 6 or (B) 10 (Data+)	► Pin 2 - Data +
► (A) 9 or (B) 13 (Data-)	► Pin 4 - Data -

2. Close the inverter if no other inverters are to be connected.

Connect the inverters to each other

- Connect using a 2 wire, shielded data cable.
- Where to connect: RJ14 sockets.

Procedure

1. Open the inverter as shown in the inverter‘s instructions.
2. Insert the self-made cable with the RJ14 plug into any RJ14 socket on inverter 1.
3. Insert the RJ11 cable into the 2nd RJ11 socket on inverter 1 and into any RJ11 socket on inverter 2.
4. Connect the other inverters to each other in the same way.
5. Close inverters.

13 Autarco

13.1 Autarco

Termination	Addressing	Interface
Yes	Yes	RS485

Select „Autarco“ during device detection.

Supported models:

- LX6000, LX10000, LX15000
- MX3000, MX3600, MX4600, MX5000
- MX3000-MII, MX3600-MII, MX4000-MII, MX4600-MII, MX5000-MII
- SX1500, SX2000, SX2500
- SX700-MII, SX1000-MII, SX1500-MII, SX2000-MII, SX-2500-MII, SX-3000-MII, SX-3600-MII
- UX50000, UX60000
- XLX20000, XLX25000, XLX30000

Overview:

- Integrated interface.
- Where to connec: RJ45 socket, inside the inverter.
- 2-pin wiring.
- Communication address must be allocated.
- Installation steps:
  - Switch off the inverters and Solar-Log™.
  - Connect inverters to the Solar-Log™.
  - Connect the inverters to each other.
  - Allocate communication address.

Connecting the inverter to Solar-Log™

The wiring is done using a

- self-made cable connection with RJ45 plug.

Procedure:

1. If you are making the cable yourself, connect the wires as shown in the following diagram:

Solar-Log™ Base RS485 (A) / (B)	Inverter RJ45
Terminal	Pin
► (A) 6 or (B) 10 (Data+)	► 1 RS485 A IN
► (A) 9 or (B) 13 (Data-)	► 2 RS485 B IN

2. Plug the RJ45 into the RJ45 OUT socket of the inverter.
3. If no further inverter is connected, terminate the inverter according to the instructions for the inverter.

Connect the inverters to each other

- Wiring via 2-wire shielded data cable.
- Where to connec: RJ45 socket.
- Wiring according to the instructions of the inverter manufacturer.
- Terminate the last inverter according to the instructions of the inverter manufacturer.

Allocate communication address

- Recommendation: Continuous numbering starting with 1.
- Default setting in the inverter: Communication address 1.
- Setting: Via inverter display.
- Procedure: According to the instructions of the inverter manufacturer.

Detection via the Solar-Log™ WEB Interface

- For detection on the Solar-Log™ , select the device class under the menu Configuration | Device | Definition | Interface with the plus symbol and then select Autarco as the manufacturer. Confirm your selection with OK.
- Save your selections and then start the Device Detection under Configuration | Device | Detection.

14 Benning

14.1 Benning

Termination	Addressing	Interface
No	Yes	Ethernet

Select „Benning“ during device detection.

Supported models:

- TLS 4.3, TLS 5.1, TLS 5.3, TLS 6.3, TLS 7.3, TLS 8.3, TLS 8.3-II, TLS 10.3, TLS 13.3, TLS 15.3, TLS 17.3

Overview

- Integrated interface.
- The inverter's IP address has to be assigned.
- Connected using network cable (patch cable) and Ethernet router or switch.
- Installation steps:
  - The inverter's has to be assigned a static IP address.
  - Switch off the inverters and Solar-Log™.
  - Connect inverters to the Solar-Log™ (RJ45).
  - Connect the inverters to each other (RJ45).

Connect inverters to the Solar-Log™

The wiring is done using a

- network cable (patch cable) and the
- Ethernet router or switch.

Connect the inverters to each other

The inverters are connected together using
the RJ45 interface and, if needed, a router or switch.
Connection setup according to the inverter's instructions.

Assigning IP addresses

- A static IP address has to be assigned to the inverter via the display.
- Please select an IP address with the same class C subnet as the Solar-Log™.
  For example: The Solar-Log™ has the IP address 192.168.178.49.
  The inverter in this case has to have a free IP address in the same range (from 192.168.178.1 to 192.168.178.254).
- Procedure: Start according to the inverter's instructions.

Note

Each inverter has to be individually reachable via the network. For this, the network interface has to be activated for every inverter (select "Activate LAN" under the LAN menu) and and the inverter needs to be connected to the local access network (LAN) via a switch.

Detection via the Solar-Log™ WEB Interface

- For detection on the Solar-Log™ , select the device class under the menu Configuration | Device | Definition | Interface with the plus symbol and then select Benning as the manufacturer. Confirm your selection with OK.
- Save your selections and then start the Device Detection under Configuration | Device | Detection.

Note for feed-in management

Supported by Solar-Log starting with inverter firmware version 19.

Note

Using the inverter's web interface, select "External control via network interface" under “Settings ► Installation ► Grid Company Settings ► Power Reduction," and under “cos(phi) Settings.”

15 Bonfiglioli (formerly Vectron)

15.1 Bonfiglioli

Termination	Addressing	Interface
DIP switch	Yes	RS485

Select „Bonfiglioli“ during device detection.

Supported models:

- RPS TL, RPS Compact

Overview

- Integrated interface.
- Where to connect: Terminal strip inside the inverter.
- 3-pin wiring.
- Communication address must be allocated.
- Installation steps:
  - Switch off the inverters and Solar-Log™.
  - Connect inverters to the Solar-Log™.
  - Connect the inverters to each other.
  - Allocate communication address.

Connect inverters to the Solar-Log™

The wiring is done using a

- self-made, shielded 3 wire data cable.

Procedure

1. Get access to the inverter interface.
2. If you are making the cable yourself, connect the wires as shown in the following diagram:

Solar-Log™ Base RS485 (A) / (B)	Terminal strip inside the inverter
Terminal	RS485 terminal
► (A) 6 or (B) 10 (Data+)	► 1 A (Data+)
► (A) 8 or (B) 12 GND	► 6 GND
► (A) 9 or (B) 13 (Data-)	► 3 B (Data-)

3. If no further inverter is connected, terminate the inverter:
   In the inverter, set the DIP switch S1 for the terminal resistor to ON.

Connect the inverters to each other

- Where to connect: Terminal strip inside the inverter.
- 3-pin wiring.

Procedure

1. Get access to the inverter interface.
2. If you are making the cable yourself, connect the wires as shown in the following diagram:

Terminal strip inside the inverter	Terminal strip inside the inverter
RS485 terminal	RS485 terminal
► 1 A (Data+)	► 2 A (Data+)
► 6 GND	► 6 GND
► 3 B (Data-)	► 4 B (Data-)

3. Connect terminals on inverter 1 to the corresponding terminals on inverter 2.
4. Connect the other inverters to each other in the same way.
5. If no further inverter is connected, terminate the inverter:
   Set the DIP S1 switch for the terminal resistor to ON.

Allocate communication address

- Recommendation: Continuous numbering starting with 1 going to 30.
- Setting: Using the inverter DIP switch.
- Procedure: Start according to the inverter's instructions.



Note

A maximum of 20 inverters can be connected per RS485 bus.

16 CanadianSolar

16.1 CanadianSolar - CSI-CT series

Termination	Addressing	Interface
No	Yes	RS485

Select „CanadianSolar: CSI-CT“ during device detection.

Supported models:

- CSI-23KTL-CT, CSI-28KTL-CT, CSI-36KTL-CT

Overview

- Integrated interface.
- Where to connect: RJ45 socket on the outside of the inverter.
- 2-pin wiring.
- The communication addresses (1-247) have to be assigned.
- Installation steps:
  - Switch off the inverters and Solar-Log™.
  - Connect inverters to the Solar-Log™.
  - Connect the inverters to each other.
  - Allocate communication address.



Caution

Risk of damage to the unit!
The Solar-Log™ also has an RJ45 socket, which must never be connected to the RJ45 socket on the inverter.

► Only connect inverters via the RS485/422 Solar-Log™ interface(s).

Connect inverters to the Solar-Log™

The wiring is done using a

- self-made, shielded 2 wire data cable with a RJ45 socket.

Procedure

1. If you are making the cable yourself, connect the wires as shown in the following diagram:

Solar-Log™ Base RS485 (A) / (B)	RJ45 socket
Terminal	PIN
► (A) 6 or (B) 10 (Data+)	► 1 (+)
► (A) 9 or (B) 13 (Data-)	► 3 (-)

2. Insert the RJ45 plug into the RJ45 socket on the inverter.

Connect the inverters to each other

- Connect using a network cable (patch cable).
- Where to connect: RJ45 sockets on the outside of the inverter.

Procedure

1. Insert the RJ45 plug into the RJ45 socket on the first inverter.
2. Insert the other end of the wire into any RJ45 socket on inverter 2.
3. Connect the other inverters to each other in the same way.

Allocate communication address

- Recommendation: Continuous numbering starting with 1.
- Address range: 1 - 247.
- Setting: Using the inverter display.
- Procedure: Start according to the inverter's instructions.



Note

Please also note the instructions the inverter's installation manual of the inverter for the set up and configuration!

16.2 CanadianSolar - CSI-GS/GI series

Termination	Addressing	Interface
Yes	Yes	RS485

Select „CanadianSolar: CSI-GS/GI“ during device detection.

Supported models:

- CSI-25KTL-GS-FL, CSI-30KTL-GS-FL, CSI-36KTL-GS-FL, CSI-40KTL-GS-FL, CSI-40KTL-GS, CSI-50KTL-GS-FL, CSI-50KTL-GS, CSI-60KTL-GS-FL, CSI-66KTL-GS-FL
- CSI-1KTL1P-GI, CSI-1.5KTL1P-GI, CSI-2KTL1P-GI, CSI-2.5KTL1P-GI, CSI-3KTL1P-GI CSI-4KTL1P-GI, CSI-5KTL1P-GI, CSI-7KTL1P-GI-FL, CSI-8KTL1P-GI-FL, CSI-9KTL1P-GI-FL, CSI-10KTL1P-GI-FL CSI-15KTL-GI-LFL, CSI-20KTL-GI-LFL, CSI-20KTL-GI-FL, CSI-25KTL-GI-L, CSI-25KTL-GI-FL, CSI-30KTL-GI-L, CSI-30KTL-GI-FL, CSI-40KTL-GI-FL, CSI-40KTL-GI-HFL, CSI-50KTL-GI, CSI-50KTL-GI-HFL, CSI-60KTL-GI-H, CSI-700KTL1P-GI

Overview

- Integrated interface.
- Where to connect: Between the COM round sockets on the outside of the inverter.
- 2-pin wiring.
- Communication address must be allocated.
- Installation steps:
  - Switch off the inverters and Solar-Log™.
  - Connect inverters to the Solar-Log™.
  - Connect the inverters to each other.
  - Allocate communication address.

Connect inverters to the Solar-Log™

The wiring is done using a

- self-made, shielded 2 wire data cable with round plug.

Procedure:

1. If you are making the cable yourself, connect the wires as shown in the following diagram:

Solar-Log™ Base RS485 (A) / (B)	Inverter RJ45
Terminal	Pin
► (A) 6 or (B) 10 (Data+)	► 1 RS485 A
► (A) 6 or (B) 10 (Data+)	► 4 RS485 A
► (A) 9 or (B) 13 (Data-)	► 2 RS485 B
► (A) 9 or (B) 13 (Data-)	► 5 RS485 B

2. Insert the RJ45 connector into the inverter's COM2 socket.
3. Terminate the inverter according to the manufacturer's instructions if no additional inverters are to be connected.

Connect the inverters to each other

- Wiring using CanadianSolar daisy chain cable.
- Where to connect: COM round socket on the inverter.

Procedure:

1. Insert the RJ45 connector into the first inverter's COM3 socket.
2. Insert the other end of the cable into the COM2 socket on second inverter.
3. Connect the other inverters to each other in the same way.
4. Terminate the last inverter according to the inverter manufacturer's instructions.

Assign the communication address

- Recommendation: Continuous numbering starting with 1.
- Default settings on the inverter: Communication address 1.
- Setting: Using the inverter's display.
- Procedure: Start according to the inverter manufacturer's instructions.

Note

Some of the listed models require an RS485 interface for communication. This is listed at the manufacturer under optional. Please observe the manufacturer's instructions and information in this regard!

Note

Please also note the instructions the inverter's installation manual of the inverter for the set up and configuration!

17 Carlo Gavazzi

17.1 Carlo Gavazzi - ISMG model

Termination	Addressing	Interface
-	No	RS485

Select "Gavazzi ISMG" during device detection.

Supported models:

- ISMG 145, ISMG 150, ISMG 160, ISMG 315, ISMG 317, ISMG 320, ISMG 322

Overview

- Integrated interface.
- Where to connect: RJ45 socket on the outside of the inverter.
- 2-pin wiring.
- Communication address does not have to be assigned.

Connect inverters to the Solar-Log™

The wiring is done using a

- self-made, shielded 2 wire data cable.

Installation steps:

- Switch off the inverters and Solar-Log™.
- Connect inverters to the Solar-Log™.
- Connect the inverters to each other.



Caution

Risk of damage to the unit!
The Solar-Log™ also has an RJ45 socket, which must never be connected to the RJ45 socket on the inverter.

► Only connect inverters via the RS485/422 Solar-Log™ interface(s).

Procedure

1. If you are making the cable yourself, connect the wires as shown in the following diagram:

Solar-Log™ Base RS485 (A) / (B)	Inverters
Terminal	RJ 45 socket
► (A) 6 or (B) 10 (Data+)	► Pin 7
► (A) 9 or (B) 13 (Data-)	► Pin 8

2. Insert the RJ45 plug into any RJ45 socket on inverter 1.

Connect the inverters to each other

- Connect using a network cable (patch cable).
- Where to connect: RJ45 socket on the outside of the inverter.

Procedure

1. Insert the RJ45 plug into the free RJ45 socket on the first inverter.
2. Insert the other end of the cable into any RJ11 socket on inverter 2.
3. Connect the other inverters to each other in the same way.

17.2 Carlo Gavazzi - HINRG model

Termination	Addressing	Interface
DIP switch	Yes	RS485

Select "Gavazzi HINRG" during device detection.

Supported models:

- HINRG1G03EU, HINRG1G05EU, HINRG3G05EU, HINRG3G10EU

Overview

- Integrated interface.
- Where to connect: Terminal strip inside the inverter.
- 2-pin wiring.
- Communication address must be allocated.
- Installation steps:
  - Switch off the inverters and Solar-Log™.
  - Connect inverters to the Solar-Log™.
  - Connect the inverters to each other.
  - Allocate communication address.

Connect inverters to the Solar-Log™

The wiring is done using a

- self-made, shielded 2 wire data cable.

Procedure

1. Open the inverter as shown in the inverter's instructions.
2. If you are making the cable yourself, connect the wires as shown in the following diagram:

Solar-Log™ Base RS485 (A) / (B)	Terminal strip inside the inverter
Terminal	RS485 terminal
► (A) 6 or (B) 10 (Data+)	► 1 T/R 1+
► (A) 9 or (B) 13 (Data-)	► 2 T/R 1-

3. If no further inverter is connected, terminate the inverter:
   In the inverter, set the DIP switch for the terminal resistor to ON.
4. Close inverters.

Connect the inverters to each other

- Where to connect: Terminal strip inside the inverter.
- 2-pin wiring.

Procedure

1. Open the inverter as shown in the inverter's instructions.
2. If you are making the cable yourself, connect the wires as shown in the following diagram:

Terminal strip inside the inverter	Terminal strip inside the inverter
RS485 terminal	RS485 terminal
► 1 T/R 1+	► 1 T/R 2+
► 2 T/R 1-	► 2 T/R 2-

3. Connect terminals A and B on inverter 1 to the corresponding terminals on inverter 2.
4. Connect the other inverters to each other in the same way.
5. If no further inverter is connected, terminate the inverter:
   Set the DIP switch for the terminal resistor to ON.
6. Close inverters.

Allocate communication address

- Recommendation: Continuous numbering starting with 1.
- Setting: Using the inverter DIP switch.
- Procedure: Start according to the inverter's instructions.

18 Chint Power

18.1 Chint Power (CPS SC and CPS SCE to 20k)

Termination	Addressing	Interface
Yes	Yes	RS422 / RS485 optional

Select „Chint Power:CPS<20k“ during device detection.

Supported models:

- CPS SC1.5KTL, CPS SCE1.5KTL, CPS SC2KTL, CPS SCE2KTL, CPS SC2.8KTL, CPS SCE3KTL-O, CPS SC4KTL, CPS SCE4KTL-O, CPS SC4KTL-O, CPS SCE4KTL-O/US, CPS SC4.6KTL-O, CPS SCE4.6KTL-O, CPS SCE5KTL-O/US, CPS SCE6KTL-O/US, CPS SCE7KTL-O/US, CPS SC10KTL-O

Overview

- Interface not integrated; Retrofit RS485 interface board.
- Where to connect: RJ45 socket on the outside of the inverter.
- 4-pin cable – only at the RS422 interface.
- Communication address does not have to be assigned.

Note:

The order in which the inverters are displayed in the Solar-Log™ after detection is random. We strongly recommend that you change the order of the inverters immediately after detection at startup, in the Configuration | Devices | Configuration | Order dialog box.

► The inverters can be identified using the displayed serial number.

- Installation steps:
  - Switch off the inverters and Solar-Log™.
  - Install the RS485 interface in the inverter.
  - Connect inverters to the Solar-Log™.
  - Connect the inverters to each other.

Installing the RS485 interface

Procedure

► Insert the RS485 interface in the bottom of the inverter in accordance with the interface board installation instructions and screw in.

Connect inverters to the Solar-Log™

The wiring is done using a

- self-made cable connection with RS485 data cable.

Procedure



Caution

Risk of damage to the unit!
The Solar-Log™ also has an RJ45 socket, which must never be connected to the RJ45 socket on the inverter.

► Only connect inverters via the RS485/422 Solar-Log™ interface(s).



Note

Only connect inverter using the RS422 interface.

1. If you are making the cable yourself, connect the wires as shown in the following diagram:

Solar-Log™ Base RS422	RJ45 inverter
Terminal	PIN
► 6 (T/RX+)	► Pin 3
► 9 (T/RX-)	► Pin 6
► 10 (R/TX+)	► Pin 1
► 13 (R/TX-)	► Pin 2

2. Insert the RJ45 plug into any RJ45 socket on inverter 1.
3. If no further inverter is connected, terminate the inverter according to the instructions for the inverter.

Connect the inverters to each other

- Connect using a network cable (patch cable).
- Where to connect: RJ45 socket on the outside of the inverter.

Procedure

1. Insert the RJ45 plug into any RJ45 socket on inverter 1.
2. Insert the other end of the wire into any RJ45 socket on inverter 2.
3. Connect the other inverters to each other in the same way.
4. Terminate in the last inverter in accordance with the inverter instructions.



Note

Please also note the instructions the inverter's installation manual of the inverter for the set up and configuration!

18.2 Chint Power (CPS 20k+)

Termination	Addressing	Interface
Yes	Yes	RS485

Select „Chint Power:CPS20k+“ during device detection.

Supported models:

- CPS SC1.5KTL, CPS SC2KTL, CPS SC2.8KTL, CPS SC4KTL, CPS SC4KTL-O, CPS SC4.6KTL-O, CPS SC10KTL-O

Overview

- Integrated interface.
- Where to connect: RJ45 socket on the outside of the inverter.
- 2-pin wiring.
- The communication addresses (1-32) have to be assigned.
- Installation steps:
  - Switch off the inverters and Solar-Log™.
  - Connect inverters to the Solar-Log™.
  - Connect the inverters to each other.

Select the Chint CPS20k+ inverter during the initial configuration.

Connect inverters to the Solar-Log™

The wiring is done using a

- self-made cable connection with RS485 data cable.

Procedure



Caution

Risk of damage to the unit!
The Solar-Log™ also has an RJ45 socket, which must never be connected to the RJ45 socket on the inverter.

► Only connect inverters via the RS485/422 Solar-Log™ interface(s).

1. If you are making the cable yourself, connect the wires as shown in the following diagram:

Solar-Log™ Base RS485 (A) / (B)	RJ45 inverter
Terminal	PIN
► (A) 6 or (B) 10 (Data+)	► 1-485+
► (A) 9 or (B) 13 (Data-)	► 3-485-

2. Insert the RJ45 plug into any RJ45 socket on inverter 1.
3. If no further inverter is connected, terminate the inverter according to the instructions for the inverter.

Connect the inverters to each other

- Connect using a network cable (patch cable).
- Where to connect: RJ45 socket on the outside of the inverter.

Procedure

1. Insert the RJ45 plug into any RJ45 socket on inverter 1.
2. Insert the other end of the wire into any RJ45 socket on inverter 2.
3. Connect the other inverters to each other in the same way.
4. Terminate in the last inverter in accordance with the inverter instructions.
5. Allocate communication address.

Allocate communication address

- Recommendation: Continuous numbering starting with 1.
- Address range: 1 - 32.
- Setting: Using the inverter display.
- Procedure: Start according to the inverter's instructions.



Note

Please also note the instructions the inverter‘s installation manual of the inverter for the set up and configuration!

18.3 Chint Power Modbus

Termination	Addressing	Interface
-*	Yes	RS485

Select „Chint Power:Modbus“ during device detection.

Supported models:

- CPS SCA3KTL-O/US, CPS SCA4KTL-O/US, CPS SCA5KTL-DO, CPS SCA5KTL-O/US, CPS SCA6KTL-DO, CPS SCA6KTL-O/US, CPS SCA7KTL-DO, CPS SCA8KTL-DO, CPS SCA10KTL-DO, CPS SCA12KTL-DO, CPS SC20KTL-DO/US-480, CPS SC20KTL-O CPS, SC100KT-O/US-480, CPS SC250KT-H, CPS SC250KTL-H, CPS SCA500KTL-H, CPS SCA500KTL-H/US, CPS SCA630 KTL

Overview

- Integrated interface.
- Where to connect: Please refer to the manufacturer‘s manual.
- 2-pin wiring.
- For communication address assignment, see the manufacturer‘s instructions.
- Installation steps:
  - Switch off the inverters and Solar-Log™.
  - Connect inverters to the Solar-Log™.
  - Connect the inverters to each other.
  - Communication address assignment see manufacturer‘s manual.
  - Setting on the inverter display according to the manufacturer‘s manual.

Connect inverters to the Solar-Log™

The wiring is done using a

- self-made cable connection with RS485 data cable.
- Where to connect: Please refer to the manufacturer‘s manual.

Procedure

1. If you are making the cable yourself, connect the wires as shown in the following diagram:

Solar-Log™ Base RS485 (A) / (B)	Inverter
Terminal	PIN
► (A) 6 or (B) 10 (Data+)	► RS-485+
► (A) 9 or (B) 13 (Data-)	► RS-485-

2. If no further inverter is connected, terminate the inverter according to the instructions for the inverter.



Note

Please also note the instructions the inverter‘s installation manual of the inverter for the set up and configuration!

18.4 Chint Power Modbus (CPS-PSW)

Termination	Addressing	Interface
-*	Yes	RS485

Select „Chint Power:Modbus“ during device detection.

Supported models:

- CPS PSW1M

Overview

- Integrated interface.
- Where to connect: The communication board is located in the center of the front of the inverter.
- 3-pin wiring.
- For communication address assignment, see the manufacturer's instructions.
- Installation steps:
  - Switch off the inverters and Solar-Log™.
  - Connect inverters to the Solar-Log™.
  - Connect the inverters to each other.
  - Communication address assignment see manufacturer's manual.
  - Setting on the inverter display according to the manufacturer's manual.

Connect inverters to the Solar-Log™

The wiring is done using a

- self-made cable connection with RS485 data cable.
- Where to connect: The communication board is located in the center of the front of the inverter.

Procedure

1. If you are making the cable yourself, connect the wires as shown in the following diagram:

Solar-Log™ Base RS485 (A) / (B)	RJ45 inverter
Terminal	PIN
► (A) 6 or (B) 10 (Data+)	► RS485+
► (A) 8 or (B) 12 GND	► GND
► (A) 9 or (B) 13 (Data-)	► RS485-

2. If no further inverter is connected, terminate the inverter according to the instructions for the inverter.



Note

Please also note the instructions the inverter's installation manual of the inverter for the set up and configuration!

18.5 Chint Power Modbus (DO - DO/HE)

Termination	Addressing	Interface
No	Yes	RS485

Select „Chint Power:Modbus“ during device detection.

Supported models:

- CPS SCA5KTL-DO, CPS SCA6KTL-DO, CPS SCA7KTL-DO, CPS SCA8KTL-DO, CPS SCA8KTL-DO/HE, CPS SCA10KTL-DO, CPS SCA10KTL-DO/HE, CPS SCA12KTL-DO, CPS SCA12KTL-DO/HE, CPS SCA8KTL-DO/HE, CPS SCA10KTL-DO/HE, CPS SCA12KTL-DO/HE, CPS SCA20KTL-DO, CPS SCA25KTL-DO, CPS SCA30KTL-DO

Overview

- Integrated interface.
- Where to connect: RJ45 socket on the outside of the inverter.
- 2-pin wiring.
- The communication addresses (1-247) have to be assigned.
- Installation steps:
  - Switch off the inverters and Solar-Log™.
  - Connect inverters to the Solar-Log™.
  - Connect the inverters to each other.
  - Allocate communication address.



Caution

Risk of damage to the unit!
The Solar-Log™ also has an RJ45 socket, which must never be connected to the RJ45 socket on the inverter.

► Only connect inverters via the RS485/422 Solar-Log™ interface(s).

Connect inverters to the Solar-Log™

The wiring is done using a

- self-made, shielded 2 wire data cable with a RJ45 socket.

Procedure

1. If you are making the cable yourself, connect the wires as shown in the following diagram:

Solar-Log™ Base RS485 (A) / (B)	RJ45 socket
Terminal	PIN
► (A) 6 or (B) 10 (Data+)	► 1 (+)
► (A) 9 or (B) 13 (Data-)	► 3 (-)

2. Insert the RJ45 plug into the RJ45 socket on the inverter.

Connect the inverters to each other

- Connect using a network cable (patch cable).
- Where to connect: RJ45 sockets on the outside of the inverter.

Procedure

1. Insert the RJ45 plug into the RJ45 socket on the first inverter.
2. Insert the other end of the wire into any RJ45 socket on inverter 2.
3. Connect the other inverters to each other in the same way.

Allocate communication address

- Recommendation: Continuous numbering starting with 1.
- Address range: 1 - 247.
- Setting: Using the inverter display.
- Procedure: Start according to the inverter's instructions.



Note

Please also note the instructions the inverter‘s installation manual of the inverter for the set up and configuration!

18.6 Chint Power Modbus (DO/US)

Termination	Addressing	Interface
Yes	Yes	RS485

Select „Chint Power:Modbus“ during device detection.

Supported models:

- CPS SCA14KTL-DO/US-208, CPS SCA23KTL-DO/US-480, CPS SCA25KTL-DO/US-208, CPS SCA25KTL-DO-R/US-480, CPS SCA28KTL-DO/US-480, CPS SCA36KTL-DO-480, CPS SCA50KTL-DO/US-480, CPS SCA60KTL-DO/US-480, CPS SCH100KTL-DO/US-480, CPS SCH100KTL-DO/US-600, CPS SCH125KTL-DO/US-600

Overview

- Integrated interface
- Where to connect: Terminal strip inside the inverter.
- 3-pin wiring.
- The communication address has to be assigned.
- Installation steps
  - Switch off the inverters and the Solar-Log™.
  - Connect inverters to the Solar-Log™.
  - Connect the inverters to each other.
  - Allocate communication address.
    Address range 1 to 254
    Settings on the inverter's display according to the manufacturer's manual.

Connect inverters to the Solar-Log™.

The wiring is done using a

- self-made cable connection.
- Where to connect: Terminal strip inside the inverter.

Procedure for the following models:

- CPS SCA25KTL-DO/US-208, CPS SCA25KTL-DO-R/US-480, CPS SCA50KTL-DO/US-480, CPS SCA60KTL-DO/US-480, CPS SCH100KTL-DO/US-480, CPS SCH100KTL-DO/US-600, CPS SCH125KTL-DO/US-600

1. If you are making the cable yourself, connect the wires as shown in the following diagram:

Solar-Log™ Base RS485 (A) / (B)	Terminal strip inside the inverter
Terminal	Terminal
► (A) 6 or (B) 10 (Data+)	► RS485_A+ (485_A)
► (A) 8 or (B) 12 GND	► RS485_GND (485_GND)
► (A) 9 or (B) 13 (Data-)	► RS485_B- (485_B)

2. If no further inverter is connected, terminate the inverter according to the instructions for the inverter.

Connect the inverters to each other

- Connect using a 3-wire, shielded data cable.
- Where to connect: Terminal strip inside the inverter.

Procedure for the following models:

- CPS SCA14KTL-DO/US-208, CPS SCA23KTL-DO/US-480, CPS SCA28KTL-DO/US-480, CPS SCA36KTL-DO-480

1. If you are making the cable yourself, connect the wires as shown in the following diagram:

Solar-Log™ Base RS485 (A) / (B)	RJ45 inverter
Terminal	PIN
► (A) 6 or (B) 10 (Data+)	► 1 485+
► (A) 9 or (B) 13 (Data-)	► 3 485-

2. If no further inverter is connected, terminate the inverter according to the instructions for the inverter.

Connect the inverters to each other.

- Connect using a network cable (patch cable).
- Where to connect: RJ45 sockets inside the inverter.

Procedure

1. Insert the RJ45 plug into the free RJ45 socket on the first inverter.
2. Insert the other end of the wire into any RJ45 socket on inverter 2.
3. Connect the other inverters to each other in the same way.
4. Terminate the last inverter in accordance with the inverter instructions.



Note

Please also note the instructions the inverter's installation manual of the inverter for the set up and configuration!

19 CMS

19.1 CMS

Termination	Addressing	Interface
DIP switch	Yes	RS485

Select „CMS“ during device detection.

Supported models:

- CMS-10000SS

Overview

- Integrated interface.
- Where to connect: Terminal strip inside the inverter.
- 2-pin wiring.
- Communication address must be allocated.
- Installation steps:
  - Switch off the inverters and Solar-Log™.
  - Connect inverters to the Solar-Log™.
  - Connect the inverters to each other.
  - Allocate communication address.

Connect inverters to the Solar-Log™

The wiring is done using a

- self-made, shielded 2 wire data cable.

Procedure

1. Open the inverter as shown in the inverter's instructions.
2. If you are making the cable yourself, connect the wires as shown in the following diagram:

Solar-Log™ Base RS485 (A) / (B)	Terminal strip inside the inverter
Terminal	RS485 terminal
► (A) 6 or (B) 10 (Data+)	► 1 T/R 1+
► (A) 9 or (B) 13 (Data-)	► 2 T/R 1-

3. If no further inverter connected, terminate the inverter:
   In the inverter, set the DIP switch for the terminal resistor to ON.
4. Close inverters.

Connect the inverters to each other

- Where to connect: Terminal strip inside the inverter.
- 2-pin wiring.

Procedure

1. Open the inverter as shown in the inverter's instructions.
2. If you are making the cable yourself, connect the wires as shown in the following diagram:

Terminal strip inside the inverter	Terminal strip inside the inverter
RS485 terminal	RS485 terminal
► 1 T/R 1+	► 1 T/R 2+
► 2 T/R 1-	► 2 T/R 2-

3. Connect terminals A and B on inverter 1 to the corresponding terminals on inverter 2.
4. Connect the other inverters to each other in the same way.
5. Terminate the last inverter.
   Set the DIP switch for the terminal resistor to ON.
6. Close inverters.

Allocate communication address

- Recommendation: Continuous numbering starting with 1.
- Setting: Using the inverter DIP switch.
- Procedure: Start according to the inverter's instructions.

20 CyberPower

20.1 CyberPower

Termination	Addressing	Interface
Yes	Yes	RS485

Select „CyberPower“ during device detection.

Supported models:

- CPSPV2000ETL, CPSPV3000ETL, CPSPV4000ETL, CPSPV4600ETL, CPSPV5000ETL, CPSPV10000ETL, CPSPV12000ETL, CPSPV18000ETL, CPSPV20000ETL

Overview

- Integrated RS485 interface.
- 8-pin cable for the RS485 connection of the Solar-Log™.
- The communication addresses (1-247) have to be assigned.
- Installation steps:
  - Switch off the inverters and Solar-Log™.
  - Connect inverters to the Solar-Log™.
  - Connect the inverters to each other.
  - Allocate communication address.

Connect inverters to the Solar-Log™

The wiring is done using a

- self-made data cable with RJ45 plug.



Caution

Risk of damage to the unit!
The Solar-Log™ also has an RJ45 socket, which must never be connected to the RJ45 socket on the inverter.

► Only connect inverters via the RS485/422 Solar-Log™ interface(s).

Procedure

1. Connect wires as shown in the diagram:

Solar-Log™ Base RS485 (A) / (B)	RJ45 inverter
Terminal	PIN
► (A) 6 or (B) 10 (Data+)	► 3 RS485 A
► (A) 9 or (B) 13 (Data-)	► 4 RS485 B

2. Run the wire from the Solar-Log™ to inverter 1 through the hole for the wire on the bottom of the unit.
3. In the inverter insert the RJ45 plug into the "RS-485 out" socket.

Connect the inverters to each other

- Connect using a network cable (patch cable).
- Where to connect: RJ45 socket on the outside of the inverter.

Procedure

1. Insert the RJ45 plug in inverter 1 into the RJ45 socket.
2. Insert the other end of the wire into the other RJ45 socket on inverter 2.
3. Connect the other inverters to each other in the same way.
4. Terminate the last inverter according to the inverter instructions.

Allocate communication address

- Recommendation: Continuous numbering starting with 1.
- Address range: 1 - 247.
- Setting: Using the inverter display.
- Procedure: Start according to the inverter's instructions.

21 Danfoss

21.1 Danfoss

Termination	Addressing	Interface
Connection plug	No	RS485

Select „Danfoss“ during device detection.

Supported models:

- FLX5 Pro, FLX6 (Pro), FLX7 Pro, FLX8 (Pro), FLX9 Pro, FLX10 (Pro), FLX12.5 (Pro), FLX15 (Pro), FLX17 (Pro), TLX 6 (+, Pro, Pro+), TLX 8 (+, Pro, Pro+), TLX10 (+, Pro, Pro+), TLX12.5 (+, Pro, Pro+), TLX15 (+, Pro, Pro+), ULX 1800, ULX 3000, ULX 3600, ULX 4000, ULX 5400
- DLX 2.0 (UL), DLX 2.9 (UL), DLX 3.8 (UL), DLX 4.4 UL, DLX 4.6 (See below for procedure)

Overview

- Integrated interface.
- Where to connect: 2 RJ45 sockets on the right on the side cover.
- Communication address does not have to be assigned.
- 4-pin wiring.
- Installation steps:
  - Switch off the inverters and Solar-Log™.
  - Connect inverters to the Solar-Log™.
  - Connect the inverters to each other.

Connect inverters to the Solar-Log™

The wiring is done using a

- self-made cable connection with RS485 data cable.



Caution

The Master Mode has to be deactivated in the Pro series devices. See the manufacturer's manual for more detailed instructions.

Procedure

1. Unscrew the side cover as shown in the inverter's instructions.
2. If you are making the cable yourself, connect the wires as shown in the following diagram:

Solar-Log™ Base RS485 (A) / (B)	RJ45 inverter
Terminal	PIN
► (A) 6 or (B) 10 (Data+)	► 6 RX/TX B (+)
► (A) 8 or (B) 12 GND	► 1 GND
► (A) 9 or (B) 13 (Data-)	► 3 RX/TX A (-)

Caution

Risk of damage to the unit!
The Solar-Log™ also has an RJ45 socket, which must never be connected to the RJ45 socket on the inverter.

► Only connect inverters via the RS485/422 Solar-Log™ interface(s).

3. If no further inverter connected, terminate the inverter:
   Insert the supplied connection plug into any free RJ45 socket on the inverter.
   The connection plug is an 8-pin dummy plug with bridged wires: Bridge wires 3 and 4 and wires 5 and 6.
4. Screw the inverter cover on again.

Connect the inverters to each other

- Connect using a network cable (patch cable).
- Where to connect: 2 RJ45 sockets on the right on the side cover.

Procedure

1. Unscrew the side cover as shown in the inverter's instructions.
2. Insert the RJ45 plug into any RJ45 socket on inverter 1.
3. Insert the other end of the wire into any RJ45 socket on inverter 2.
4. Connect the other inverters to each other in the same way.
5. Terminate the last inverter.
   Insert the connection plug into the free RJ45 socket.
6. Screw the inverter cover on again.

Wiring for DLX series
Supported models:

- DLX 2.0 (UL), DLX 2.9 (UL), DLX 3.8 (UL), DLX 4.4 UL, DLX 4.6

7. If you are making the cable yourself, connect the wires as shown in the following diagram:

Solar-Log™ Base RS485 (A) / (B)	Inverter
Terminal	PIN
► (A) 6 or (B) 10 (Data+)	► B (+)
► (A) 8 or (B) 12 GND	► GND
► (A) 9 or (B) 13 (Data-)	► A (-)

Note

Please also note the instructions the inverter's installation manual of the inverter for the set up and configuration!

22 Delta

22.1 Delta (Standard)

Termination	Addressing	Interface
Resistor	Yes	RS485

Select „Delta: Standard“ during device detection.

Supported models:

- SI 2500, SI 3300, SI 5000, SOLIVIA 2.5 EU G3, SOLIVIA 3.0 EU G3, SOLIVIA 3.3 EU G3, SOLIVIA 5.0 EU G3, SOLIVIA CM100, SOLIVIA 11 EU G4TR, SOLIVIA 3.3 EU G4TR, SOLIVIA 3.6 EU G4TR, SOLIVIA 3.6 EU G3, SOLIVIA 15 EU TL G4, SOLIVIA 20 EU TL G4, SOLIVIA 2.5 NA G4, SOLIVIA 3.0 NA G4, SOLIVIA 3.3 NA G4, SOLIVIA 3.6 NA G4, SOLIVIA 4.4 NA G4, SOLIVIA 5.0 NA G4, SOLIVIA 2.5 AP G3, SOLIVIA 3.0 AP G3, SOLIVIA 3.3 AP G3, SOLIVIA 3.6 AP G3, SOLIVIA 5.0 AP G3, SOLIVIA CS, SOLIVIA 2.0 EU G4TR, SOLIVIA 2.5 EU G4TR, SOLIVIA 3.0 EU G4TR, SOLIVIA 4.4 EU G4TR, SOLIVIA 5.0 EU G4TR, SOLIVIA 6.0 EU T4 TL, SOLIVIA 8.0 EU T4 TL, SOLIVIA 10 EU G4TR, SOLIVIA 11 EU G4TR EVR, SOLIVIA 5.0 EU G4TL, SOLIVIA 10 EU T4 TL, SOLIVIA 12 EU G4TL, SOLIVIA 12 EU T4 TL, SOLIVIA 30 EU T4 TL, SOLIVIA 3.0 NAG4TL, SOLIVIA 3.8 NAG4TL, SOLIVIA 5.0 NAG4TL, SOLIVIA 5.2 NAG4TL, SOLIVIA 6.6 NAG4TL, SOLIVIA 7.6 NAG4TL

Overview

- Integrated interface.
- Where to connect: RJ45 socket on the outside of the inverter.
- 3-pin wiring.
- Communication address must be allocated.
- Installation steps:
  - Switch off the inverters and Solar-Log™.
  - Connect inverters to the Solar-Log™.
  - Connect the inverters to each other.
  - Allocate communication address.

Connect inverters to the Solar-Log™

The wiring is done using a

- self-made cable connection with RS485 data cable.



Caution

Risk of damage to the unit!
The Solar-Log™ also has an RJ45 socket, which must never be connected to the RJ45 socket on the inverter.

► Only connect inverters via the RS485/422 Solar-Log™ interface(s).

Procedure

1. If you are making the cable yourself, connect the wires as shown in the following diagram:

Solar-Log™ Base RS485 (A) / (B)	RJ45 inverter
Terminal	PIN
► (A) 6 or (B) 10 (Data+)	► TX_A (+) / Data+
► (A) 8 or (B) 12 GND	► GND
► (A) 9 or (B) 13 (Data-)	► RX_B (-) / Data-

Note

The PIN allocation has been changed with the new generation. 3 wired cabling functions with both generations.

2. Insert the RJ45 plug into the RJ45 socket on the inverter.
3. If no further inverter connected, terminate the inverter:
   Insert the 120 Ω resistor into the free RJ45 socket.
4. Close the unit cover on the bottom of the inverter.

Connect the inverters to each other

- Connect using a network cable (patch cable)
- Where to connect: RJ45 sockets on the outside of the inverter.

Procedure

1. Insert the RJ45 plug into any RJ45 socket on inverter 1.
2. Insert the other end of the wire into any RJ45 socket on inverter 2.
3. Connect the other inverters to each other in the same way.
4. Terminate the last inverter.
   Insert the 120 Ω resistor into the free RJ45 socket.

Allocate communication address

- Recommendation: Continuous numbering starting with 1.
- Set the inverter baud rate to 19200.
- Setting: Using the inverter display.
- Procedure: Start according to the inverter's instructions.

Note

Please also note the instructions the inverter‘s installation manual of the inverter for the set up and configuration!

22.2 Delta RPI (H/M)

Termination	Adressing	Interface
Yes	Yes	RS485

Select „Delta: Standard“ during device detection.

Supported models:

- RPI H3, RPI H3A, RPI H4A, RPI H5, RPI H5A, RPI M6, RPI M6A, RPI M8, RPI M8A, RPI M10, RPI M10A, RPI M12, RPI M15A, RPI M20A, RPI M30, RPI M30A, RPI M50A

Overview

- Integrated interface.
- Where to connect: Terminal strip inside the inverter.
- 3-pin wiring.
- Communication address must be allocated.
- Installation steps:
  - Switch off the inverters and the Solar-Log™.
  - Connect the inverters to the Solar-Log™.
  - Connect the inverters to each other.
  - Assign the communication address.

Connect the inverters to the Solar-Log™

The wiring is done using a

- self-made, shielded 3-wire data cable.

Procedure

1. Open the inverter according to the inverter‘s instructions.
2. Pull the free wires through the wire opening in the inverter.
3. If you are making the cable yourself, connect the wires as shown in the following diagram:

Solar-Log™ Base RS485 (A) / (B)	Inverter terminal strip
Terminal	Terminal
► (A) 6 or (B) 10 (Data+)	► 3 (Data+)
► (A) 8 or (B) 12 GND	► 2 GND
► (A) 9 or (B) 13 (Data-)	► 4 (Data-)

4. If no further inverter connected, terminate the inverter:
   Set the switch inside the inverter to ON and all other inverters to OFF.
5. Close the inverter if no other inverters are to be connected.

Connect the inverters to each other

- Connect using a 3-wire, shielded data cable.
- Where to connect: Terminal strip inside the inverter.

The RS485 connections on the terminal strip are each double connections so that the wiring can be continued to the next inverter.

Procedure

1. Connect the data cable in the free terminals of the first inverter – 2 (GND), 3 (Data+) and 4 (Data-).
2. Connect the other end of the data cable in the free terminals of the second inverter – 2 (GND), 5 (Data+) and 6 (Data-).
3. Connect the other inverters to each other in the same way.
4. Terminate the last inverter:
   Set the switch inside the inverter to ON and all other inverters to OFF.
5. Close inverters.

Assign the communication address

- Recommendation: Continuous numbering starting with 1.
- Setting: Using the inverter display.
- Procedure: Start according to the inverter's instructions.

22.3 Delta RPI - Sunspec

Termination	Addressing	Interface
Switch	Yes	RS485

Select „Delta: Sunspec“ during device detection.

Supported models:

- M6, M6A, M8, M8A, M10, M10A, M12, M15A, M15A Flex, M20A, M20A Flex, M30, M30A, M30A Flex, M36U, M42U, M50A, M50A Flex, M60U, M70A Flex, M80U, M88H, M100A Flex

Overview

- Integrated interface.
- Where to connect: Terminal strip inside the inverter.
- 3-pin wiring.
- Communication address must be allocated.
- Installation steps:
  - Switch off the inverters and the Solar-Log™.
  - Connect the inverters to the Solar-Log™.
  - Connect the inverters to each other.
  - Assign the communication address.

Connect the inverters to the Solar-Log™

The wiring is done using a

- self-made, shielded 3-wire data cable.

Procedure

1. Open the inverter according to the inverter's instructions.
2. Pull the free wires through the wire opening in the inverter.
3. If you are making the cable yourself, connect the wires as shown in the following diagram:

Solar-Log™ Base RS485 (A) / (B)	Inverter terminal strip
Terminal	Terminal
► (A) 6 or (B) 10 (Data+)	► 3 (Data+)
► (A) 8 or (B) 12 GND	► 2 GND
► (A) 9 or (B) 13 (Data-)	► 4 (Data-)

4. If no further inverter connected, terminate the inverter:
   Set the switch inside the inverter to ON and all other inverters to OFF.
5. Close the inverter if no other inverters are to be connected.

Connect the inverters to each other

- Connect using a 3-wire, shielded data cable.
- Where to connect: Terminal strip inside the inverter.

The RS485 connections on the terminal strip are each double connections so that the wiring can be continued to the next inverter.

Procedure

1. Connect the data cable in the free terminals of the first inverter – 2 (GND), 3 (Data+) and 4 (Data-).
2. Connect the other end of the data cable in the free terminals of the second inverter – 2 (GND), 5 (Data+) and 6 (Data-).
3. Connect the other inverters to each other in the same way.
4. Terminate the last inverter:
   Set the switch inside the inverter to ON and all other inverters to OFF.
5. Close inverters.

Assign the communication address

- Recommendation: Continuous numbering starting with 1.
- Setting: Using the inverter display.
- Procedure: Start according to the inverter's instructions.

Overview table of Delta devices which use the Delta proprietary protocol and which use Sunspec:

Delta models	Delta proprietary protocol	Sunspec protocol	At least firmware version for Sunspec
G1			
G2	Yes (Firmware version >=10.00)		
G3 TR	Yes		
G3 TL	Yes		
G4 TR	Yes		
G4 TL	Yes		
RPI 1PH	Yes		
RPI M6A-M10A	Yes		
RPI M15A-M20A	Yes	Yes	COM 2.44
RPI M30A	Yes	Yes	COM 1.39
RPI M50A	Yes	Yes	COM 1.38
M88H		Yes	COM 1.08
M50A Flex		Yes	since the first shipping
M70A Flex		Yes	since the first shipping
M100A Flex		Yes	since the first shipping



Note!

Only one protocol can be used per bus line.

23 Diehl Ako

23.1 Diehl Ako

Diehl Ako inverters have been listed as „Diehl Ako“ in our firmware up to version 3.1.1. Starting with firmware version 3.1.2 they will be listed as „Platinum“.

24 Eaton

24.1 Eaton

Termination	Addressing	Interface
Yes	No	RS422

Select „Eaton“ during device detection.

Overview

- Interface not integrated; Retrofit RS485 interface board.
- 4-pin cable – only at the RS422 interface.
- Communication address does not have to be assigned.
- Multi-string technology.

Eaton inverters are fitted with 1 or 3 MPP trackers depending on the model. Each string input is monitored separately and ideally adjusted to the connected modules.

The Solar-Log™ automatically detects how many inverters and strings are active during inverter detection.

Note

The order in which the inverters are displayed in the Solar-Log™ after detection is random. We strongly recommend that you change the order of the inverters immediately after detection at startup, in the Configuration | Devices | Configuration | Order dialog box.

► The inverters can be identified using the displayed serial number.

- Installation steps:
  - Disconnect the power for the inverter and Solar-Log™ .
    Connect the RS485 interface in the inverter.
  - Connect inverters to the Solar-Log™.
  - Connect the inverters to each other.

Installing the RS485 interface

Procedure

► Insert the RS485 interface in the bottom of the inverter in accordance with the interface board installation instructions and screw in.

Connect inverters to the Solar-Log™

The wiring is done using a

- self-made, shielded 4 wire data cable.

Note

Only connect inverter using the RS422 interface.

Procedure

1. Open the inverter as shown in the inverter's instructions.
2. Pull the free wires through the wire opening in the inverter.
3. If you are making the cable yourself, connect the wires as shown in the following diagram:

Solar-Log™ Base RS422	Inverter terminal strip
Terminal	Terminal
► 6 (T/RX+)	► R+
► 9 (T/RX-)	► R-
► 10 (R/TX+)	► T+
► 13 (R/TX-)	► T-

4. If no further inverter is connected, terminate the inverter according to the instructions for the inverter.
5. Close the inverter if no other inverters are to be connected.

Connect the inverters to each other

- Connect using a 4 wire, shielded data cable.
- Where to connect: Terminal strip inside the inverter (on the retrofitted RS485 interface).

Procedure

1. Open the inverter as shown in the inverter's instructions.
2. Connect terminals R+, R-, T+ and T- of inverter 1 to the corresponding terminals on inverter 2.
3. Connect the other inverters to each other in the same way.
4. Terminate the last inverter according to the inverter instructions.
5. Close inverters.

25 EEI

25.1 EEI

Termination	Addressing	Interface
No	Yes	Ethernet

Select „EEI“ during device detection.

Supported models:

- 8YF250Q3AF01

Overview

- Integrated interface.
- The inverter‘s IP address has to be assigned.
- Connected using network cable (patch cable) and Ethernet router or switch.
- Installation steps:
  - The inverter‘s has to be assigned a static IP address.
  - Switch off the inverters and Solar-Log™.
  - Connect inverters to the Solar-Log™ (RJ45).
  - Connect the inverters to each other (RJ45).

Connect inverters to the Solar-Log™

The wiring is done using a

- network cable (patch cable) and the
- Ethernet router or switch.

Connect the inverters to each other

The inverters are connected together using
the RJ45 interface and, if needed, a router or switch.
Connection setup according to the inverter‘s instructions.

Assigning IP addresses

- A static IP address has to be assigned to the inverter via the display.
- Please select an IP address with the same class C subnet as the Solar-Log™.
  For example: The Solar-Log™ has the IP address 192.168.178.49.
  The inverter in this case has to have a free IP address in the same range (from 192.168.178.1 to 192.168.178.254).
- Procedure: Start according to the inverter‘s instructions.

Detection via the Solar-Log™ WEB Interface

- For detection on the Solar-Log™ , select the device class under the menu Configuration | Device | Definition | Interface with the plus symbol and then select EEI as the manufacturer. Confirm your selection with OK.
- Save your selections and then start the Device Detection under Configuration | Device | Detection.

26 Effekta

26.1 Effekta - ES

Termination	Addressing	Interface
Jumper	Yes	RS485

Select "Effekta: ES" during device detection.

Supported models:

- ES2200, ES3300, ES4200, ES5000

Overview

- Interface not integrated; Retrofit Effekta RS485 interface.
- 3-pin wiring
- Communication address must be allocated
- Installation steps
  - Switch off the inverters and Solar-Log™
  - Install the RS485 interface in the inverter
  - Connect inverters to the Solar-Log™
  - Connect the inverters to each other
  - Allocate communication address

Installing the RS485 interface

Procedure

► Install the RS485 interface in the inverter in accordance with the interface board installation instructions.

Connect inverters to the Solar-Log™

The wiring is done using a

- self-made, shielded 3 wire data cable.

Procedure

1. Open the inverter as shown in the inverter's instructions.
2. If you are making the cable yourself, connect the wires as shown in the following diagram:

Solar-Log™ Base RS485 (A) / (B)	Inverter terminal strip
Terminal	Terminal
► (A) 6 or (B) 10 (Data+)	► Pin 2 RS485 A (+)
► (A) 8 or (B) 12 GND	► Pin 3 GND
► (A) 9 or (B) 13 (Data-)	► Pin 1 RS485 B (-)

3. If no further inverter connected, terminate the inverter:
   Set the jumper on the RS485 interface board to ON.
4. Close the inverter if no other inverters are to be connected.

Connect the inverters to each other

- Connect using a 3 wire, shielded data cable
- Where to connect: Terminal strip inside the inverter (on the retrofitted RS485 interface).

Procedure

1. Open the inverter as shown in the inverter's instructions.
2. Using the data cable connect terminals "Pin 2-RS485-A (+)", "Pin 3-GND" and "Pin 1-RS485-B (-)" of inverter 1 to the corresponding terminals on inverter 2.
3. Connect the other inverters to each other in the same way.
4. Terminate the last inverter.
   Set the jumper on the RS485 interface board to ON.
5. Close inverters.

Allocate communication address

- Recommendation: Continuous numbering starting with 1.
- Setting: Using the inverter display
- Procedure: Start according to the inverter's instructions

26.2 Effekta KS Multitracker

Termination	Addressing	Interface
DIP switch	Yes	RS485

Select “Effekta: KS DT/Trio” during device detection

Supported models:

- KS-3000DT, KS-3600DT, KS-4200DT, KS-5000DT, KS-10000, KS-12500, KS-15000, KS-17000, KS-20000, KS-25000, KS-30000, KS-36000, KS-50000, KS-56000, KS-60000, KS-72000

Overview

- Integrated interface.
- 3-pin wiring.
- 2 RJ45 sockets on the outside of the inverter.
- Communication address must be allocated.
- Installation steps:
  - Switch off the inverters and Solar-Log™.
  - Connect inverters to the Solar-Log™.
  - Connect the inverters to each other.
  - Allocate communication address.
    Address range 1 to 32.
    Settings on the inverter’s display according to the manufacturer’s manual.

Connect inverters to the Solar-Log™

The wiring is done using a

- self-made cable connection with RS485 data cable.



Caution

Risk of damage to the unit!
The Solar-Log™ also has an RJ45 socket, which must never be connected to the RJ45 socket on the inverter.

► Only connect inverters via the RS485/422 Solar-Log™ interface(s).

Procedure

1. If you are fabricating the cable yourself, connect the wires as shown in the following diagram:

Solar-Log™ Base RS485 (A) / (B)	RS485 inverter socket
Terminal	PIN
► (A) 6 or (B) 10 (Data+)	► Pin 1 (A) T/R+
► (A) 8 or (B) 12 GND	► Pin 5 GND
► (A) 9 or (B) 13 (Data-)	► Pin 2 (B) T/R-

2. Insert the RJ45 plug into the RJ45 socket on the inverter.
3. If no further inverter connected, terminate the inverter:
   Set the dip switch to “on.”

Connect the inverters to each other

- Connect using a network cable (patch cable) (No Crossover cable).
- Where to connect: RJ45 sockets on the outside of the inverter.

Procedure

1. Insert the RJ45 plug into the free RJ45 socket on the first inverter.
2. Insert the other end of the wire into any RJ45 socket on inverter 2.
3. Connect the other inverters to each other in the same way.
4. Terminate the last inverter, set the DIP switch to “on.”

Allocate communication address

- Recommendation: Continuous numbering from 1 to 32.
- Setting: Using the inverter display.
- Procedure: Start according to the inverter’s instructions.



Note

The following setting needs to be enable so that the PM parameters can be received.
SETUP ► REMOTE CNTRL ► ENABLE

26.3 Effekta KS Singletracker

Termination	Addressing	Interface
DIP switch	Yes	RS485

Select “Effekta: KS ST” during device detection.

Supported models:

- KS-1500ST, KS-2000ST, KS-3000ST, KS-3600ST

Overview

- Integrated interface.
- 3-pin wiring.
- 2 RJ45 sockets on the outside of the inverter.
- Communication address must be allocated.
- Installation steps:
  - Switch off the inverters and Solar-Log™.
  - Connect inverters to the Solar-Log™.
  - Connect the inverters to each other.
  - Allocate communication address.
  - Address range 1 to 254.
    Settings on the inverter’s display according to the manufacturer’s manual.

Connect inverters to the Solar-Log™

The wiring is done using a

- self-made cable connection with RS485 data cable.



Caution

Risk of damage to the unit!
The Solar-Log™ also has an RJ45 socket, which must never be connected to the RJ45 socket on the inverter.

► Only connect inverters via the RS485/422 Solar-Log™ interface(s).

Procedure

1. If you are fabricating the cable yourself, connect the wires as shown in the following diagram:

Solar-Log™ Base RS485 (A) / (B)	RS485 inverter socket
Terminal	PIN
► (A) 6 or (B) 10 (Data+)	► Pin 1 (A) T/R+
► (A) 8 or (B) 12 GND	► Pin 5 GND
► (A) 9 or (B) 13 (Data-)	► Pin 2 (B) T/R-

2. Insert the RJ45 plug into the RJ45 socket on the inverter.
3. If no further inverter connected, terminate the inverter:
   Set the dip switch to “on.”

Connect the inverters to each other

- Connect using a network cable (patch cable) (No Crossover cable).
- Where to connect: RJ45 sockets on the outside of the inverter.

Procedure

1. Insert the RJ45 plug into the free RJ45 socket on the first inverter.
2. Insert the other end of the wire into any RJ45 socket on inverter 2.
3. Connect the other inverters to each other in the same way.
4. Terminate the last inverter, set the DIP switch to “on.”

Allocate communication address

- Recommendation: Continuous numbering from 1 to 254.
- Setting: Using the inverter display.
- Procedure: Start according to the inverter’s instructions.

27 EHE

Ehe offers three wiring options for their various models. Some models can be connected using a bus. Please note that the wires (Data + and Data-) always have to properly connected together.

27.1 EHE N1k5TL to N50kTL

Termination	Addressing	Interface
Yes	Yes	RS485

Select “EHE: Modbus” during device detection.

Supported models:

- N1K5TL, N2KTL, N3KTL, N4KTL, N4K6-TL, N5K-TL (Single phase), N5K-TL (Three phase), N6KTL, N10KTL, N12KTL, N15KTL, N17KTL, N20KTL, N30KTL, N50KTL

Overview

- Integrated interface.
- Where to connect: RJ45 socket, on the outside of the inverter.
- 2-pin wiring.
- Communication address must be allocated.
- Installation steps:
  - Switch off the inverters and Solar-Log™.
  - Connect inverters to the Solar-Log™.
  - Connect the inverters to each other.
  - Enter the communication address on the interver's display.
    Every address may only be used once.
    Address range 1 to 247.



Caution

Risk of damage to the unit!
The Solar-Log™ also has an RJ45 socket, which must never be connected to the RJ45 socket on the inverter.

► Only connect inverters via the RS485/422 Solar-Log™ interface(s).

Connect inverters to the Solar-Log™

The wiring is done using a

- self-made cable connection.
- Where to connect: RJ45 socket, on the outside of the inverter.

Procedure

1. If you are making the cable yourself, connect the wires as shown in the following diagram:

Solar-Log™ Base RS485 (A) / (B)	Terminal strip inside the inverter
Terminal	PIN
► (A) 6 or (B) 10 (Data+)	► Pin 4 - 485+ (A)
► (A) 9 or (B) 13 (Data-)	► Pin 5 - 485- (B)

2. If only one inverter is to be connected, according to the manufacturer‘s handbook it must be terminated.

Connect the inverters to each other

- Connect with a shielded twisted-pair cable.
- Where to connect: RJ45 socket, on the outside of the inverter.

Procedure

1. If you make the cable yourself, connect the wires as shown in the diagram:

Terminal strip inside the second inverter	Terminal strip inside the second inverter
PIN	PIN
► Pin 4 - 485+ (A)	► Pin 4 - 485+ (A)
► Pin 5 - 485- (B)	► Pin 5 - 485- (B)

2. Wire the remaining inverters to each other according to the manufacturer's specifications.
3. Terminate the last inverter according to the inverter instructions.

The RS485 sockets are each double connections so that the wiring can also be continued to the next inverter.

Procedure

1. Connect the data cable to the free blocks A, B and G on inverter 1.
2. Connect the other end of the cable to the blocks A, B and G on inverter 2.
3. Connect the remaining inverters in the same way.
4. Terminate the last inverter according to the manufacturer's instructions.
5. Close the inverter if no other inverters are to be connected.

Notes on inverter addresses

- Recommendation: Continuous numbering starting with 1.
- Settings: On the inverter display.
- Procedure: Follow the manufacturer's documentation for the inverter.

Note

A maximum of 16 inverters can be connected per RS485 bus.

27.2 EHE N10k to N100k

Termination	Addressing	Interface
Yes	Yes	RS485

Select “EHE: Modbus” during device detection.

Supported models:

- N10K, N20K, N30K, N50K, N100K

Overview

- Integrated interface.
- Where to connect: Terminal strip inside the inverter.
- 2-pin wiring.
- Communication address must be allocated.
- Installation steps:
  - Switch off the inverters and Solar-Log™.
  - Connect inverters to the Solar-Log™.
  - Connect the inverters to each other.
  - Enter the communication address on the interver's display.
    Every address may only be used once.
    Address range 1 to 247.

Connect inverters to the Solar-Log™

The wiring is done using a

- self-made cable connection.
- Where to connect: Terminal strip inside the inverter.

Procedure

1. If you are making the cable yourself, connect the wires as shown in the following diagram:

Solar-Log™ Base RS485 (A) / (B)	Terminal strip inside the inverter
Terminal	Terminal
► (A) 6 or (B) 10 (Data+)	► JX2 - A
► (A) 9 or (B) 13 (Data-)	► JX2 - B

2. If no further inverter is connected, terminate the inverter according to the instructions for the inverter.

Connect the inverters to each other

- Connect with a shielded twisted-pair cable.
- Where to connect: Terminal strip inside the inverter

Procedure

1. If you make the cable yourself, connect the wires as shown in the diagram:

Terminal strip inside the first inverter	Terminal strip inside the second inverter
Terminal	Terminal
► JX2 - A	► JX2 - A
► JX2 - B	► JX2 - B

2. Wiring the remaining inverters in the same way.
3. Terminate the last inverter according to the inverter instructions.

Procedure

1. Connect the data cable to the blocks JX2 A and B on inverter 1.
2. Connect the data cable to the blocks JX2 A and B on inverter 2.
3. Connect the remaining inverters in the same way.
4. Terminate the last inverter according to the manufacturer's instructions.
5. Close the inverter if no other inverters are to be connected.

Notes on inverter addresses

- Recommendation: Continuous numbering starting with 1.
- Settings: On the inverter display.
- Procedure: Follow the manufacturer's documentation for the inverter.

Note

A maximum of 16 inverters can be connected per RS485 bus.

27.3 EHE N250k to N500k-TL

Termination	Addressing	Interface
Yes	Yes	RS485

Select “EHE: Modbus” during device detection.

Supported models:

- N250K, N250K-TL, N500K-TL

Overview

- Integrated interface.
- Where to connect: Terminal strip inside the inverter.
- 2-pin wiring.
- Communication address must be allocated.
- Installation steps:
  - Switch off the inverters and Solar-Log™.
  - Connect inverters to the Solar-Log™.
  - Connect the inverters to each other.
  - Enter the communication address on the interver's display.
    Every address may only be used once.
    Address range 1 to 247.

Connect inverters to the Solar-Log™

The wiring is done using a

- self-made cable connection.
- Where to connect: Terminal strip inside the inverter.

Procedure

1. If you are making the cable yourself, connect the wires as shown in the following diagram:

Solar-Log™ Base RS485 (A) / (B)	Terminal strip inside the inverter
Terminal	Terminal
► (A) 6 or (B) 10 (Data+)	► JX9 - A
► (A) 9 or (B) 13 (Data-)	► JX9 - B

2. If no further inverter is connected, terminate the inverter according to the instructions for the inverter.

Connect the inverters to each other

- Connect with a shielded twisted-pair cable.
- Where to connect: Terminal strip inside the inverter.

Procedure

1. If you make the cable yourself, connect the wires as shown in the diagram:

Terminal strip inside the first inverter	Terminal strip inside the second inverter
Terminal	Terminal
► JX9 - A	► JX9 - A
► JX9 - B	► JX9 - B

2. Wiring the remaining inverters in the same way.
3. Terminate the last inverter according to the inverter instructions.

Procedure

1. Connect the data cable to the blocks JX2 A and B on inverter 1.
2. Connect the data cable to the blocks JX2 A and B on inverter 2.
3. Connect the remaining inverters in the same way.
4. Terminate the last inverter according to the manufacturer's instructions.
5. Close the inverter if no other inverters are to be connected.

Notes on inverter addresses

- Recommendation: Continuous numbering starting with 1.
- Settings: On the inverter display.
- Procedure: Follow the manufacturer's documentation for the inverter.



Note

A maximum of 16 inverters can be connected per RS485 bus.

28 EKO Energy

28.1 EKO Energy

Termination	Addressing	Interface
Yes	Yes	RS485

Select “EKO Energy” during device detection.

Overview

- Integrated interface.
- Where to connect: Between the COM round sockets on the outside of the inverter.
- 2-pin wiring.
- Communication address must be allocated.
- Installation steps:
  - Switch off the inverters and Solar-Log™.
  - Connect inverters to the Solar-Log™.
  - Connect the inverters to each other.
  - Allocate communication address.

Connect inverters to the Solar-Log™

The wiring is done using a

- ready-made data cable (supplied with the inverter).

or

- self-made, shielded 2 wire data cable with round plug.

Procedure

1. If you are making the cable yourself, connect the wires as shown in the following diagram:

Solar-Log™ Base RS485 (A) / (B)	Inverter round socket
Terminal	Terminal
► (A) 6 or (B) 10 (Data+)	► 1
► (A) 9 or (B) 13 (Data-)	► 2

2. Insert the round plug into any COM round socket on the inverter.
3. If no further inverter is connected, terminate the inverter according to the instructions for the inverter.

Connect the inverters to each other

- Connect using a self-made daisy chain cable.
- Where to connect: Between the COM round sockets on the outside of the inverter.

Procedure

1. Insert the round plug into any round socket on inverter 1.
2. Insert the other end of the cable into any round socket on inverter 2.
3. Connect the other inverters to each other in the same way.
4. Terminate the last inverter according to the inverter instructions.

Allocate communication address

- Recommendation: Continuous numbering starting with 1.
- Default settings on the inverter: Communication address 1.
- Setting: Using the inverter display.
- Procedure: Start according to the inverter's instructions.

29 Eltek

29.1 Eltek

Termination	Addressing	Interface
Yes	Yes	RS485

Select „Eltek: Theia HE-t/HE-t UL“ during device detection

Supported models:

- THEIA 2.0HE-t, THEIA 2.9HE-t, THEIA 3.8HE-t, THEIA 4.4HE-t, THEIA 4.6HE-t, THEIA 2.0HE-t UL, THEIA 2.9HE-t UL, THEIA 3.8HE-t UL, THEIA 4.4HE-t UL

Overview

- Integrated interface.
- Where to connect: Terminal strip inside the inverter.
- 2-pin wiring.
- Communication address must be allocated.
- Installation steps:
  - Switch off the inverters and Solar-Log™.
  - Connect inverters to the Solar-Log™.
  - Connect the inverters to each other.
  - Configure the inverter's communication interface.
  - Allocate communication address.

Connect inverters to the Solar-Log™

The wiring is done using a

- self-made, shielded 2 wire data cable.

Procedure

1. Connect wires as shown in the diagram below:

Solar-Log™ Base RS485 (A) / (B)	Inverter terminal strip
Terminal	Terminal
► (A) 6 or (B) 10 (Data+)	► B (Data+)
► (A) 9 or (B) 13 (Data-)	► A (Data-)

2. If no further inverter is connected, terminate the inverter according to the instructions for the inverter.
3. Close the inverter cover if no other inverters are to be connected.

Connect the inverters to each other

The inverters are connected together using the RS485 interface. Refer to the manufacturer's inverter manual for the details on how to setup the connection.

Allocate communication address

- Recommendation: Continuous numbering starting with 1.
- Setting: Using the inverter display.
- Procedure: Start according to the inverter's instructions.

Other configurations

- Activate the RS485 interface Using the inverter display.

Note

Pay particular attention to the instructions in the installation manual regarding the address types, activating the communication interface and the master/slave mode.

Note

Please also note the instructions the inverter's installation manual of the inverter for the set up and configuration!

29.2 Eltek central inverter

Termination	Addressing	Interface
DIP switch	Yes	RS485

Select "Eltek: Theia Central TL/TX" during device detection.

Supported models:

- THEIA Central 20kW TL, THEIA Central 20kW TX, THEIA Central 30kW TL, THEIA Central 30kW TX, THEIA Central 50kW TL, THEIA Central 50kW TX, THEIA Central 100kW TL, THEIA Central 100kW TX, THEIA Central 150kW TL, THEIA Central 200kW TL, THEIA Central 250kW TL, THEIA Central 350kW TL, THEIA Central 500kW TL

Overview

- Integrated interface.
- Where to connect: Terminal strip inside the inverter.
- 3-pin wiring.
- The communication address has to be assigned (1 - 247).
- Installation steps:
  - Switch off the inverters and Solar-Log™.
  - Connect inverters to the Solar-Log™.
  - Connect the inverters to each other.
  - Configure the inverter's communication interface.
  - Allocate communication address.

Connect inverters to the Solar-Log™

The wiring is done using a

- self-made, shielded 3 wire data cable.

Procedure

1. Connect wires as shown in the diagram below:

Solar-Log™ Base RS485 (A) / (B)	Inverter terminal strip
Terminal	Terminal
► (A) 6 or (B) 10 (Data+)	► X12.1 A (Data +)
► (A) 8 or (B) 12 GND	► X12.3 GND
► (A) 9 or (B) 13 (Data-)	► X12.2 B (Data -)

2. If no further inverter is connected, terminate the inverter according to the instructions for the inverter.
3. Close the inverter cover if no other inverters are to be connected.

Connect the inverters to each other

The inverters are connected together using the RS485 interface. Refer to the manufacturer's inverter manual for the details on how to setup the connection.

Allocate communication address

- Recommendation: Continuous numbering starting with 1 going to 247.
- Setting: Using the inverter display.
- Procedure: Start according to the inverter's instructions.

Other configurations

- Activate the RS485 interface Using the inverter display.

Note

Address settings: from inverter menu: Settings ► Modbus ► Modbus Address
Please refer to the inverter instructions

Note

Please check the default values of the inverter. The inverter has to communicate with the following settings: Baud rate 9600, Data bits: 8, Parity: none and Stop bits: 2.

Very important!

For the connection of the devices of the respective manufacturer, please observe the manufacturer's documentation in the respective valid version.

30 Enfinity

30.1 Enfinity

Termination	Addressing	Interface
-	Yes	RS422

Select „Enfinity“ during device detection.

Supported models:

- THEIA 2.0HE-t, THEIA 2.9HE-t, THEIA 3.8HE-t, THEIA 4.4HE-t, THEIA 4.6HE-t, THEIA 2.0HE-t UL, THEIA 2.9HE-t UL, THEIA 3.8HE-t UL, THEIA 4.4HE-t UL

Overview

- Integrated interface.
- 2 RJ11 sockets inside the inverter.
- 4-pin wiring - only at the RS422 interface.
- Communication address does not have to be assigned.
- Installation steps:
  - Switch off the inverters and Solar-Log™.
  - Connect inverters to the Solar-Log™.
  - Connect the inverters to each other.



Note

Only connect inverter using the RS422 interface.

Connect inverters to the Solar-Log™.

The wiring is done using a

- self-made, shielded 4 wire data cable.
- Where to connect: RJ11 socket on the inverter.

Procedure

Open the inverter as shown in the inverter‘s instructions.

1. If you are making the cable yourself, connect the wires as shown in the following diagram:

Solar-Log™ Base RS422	Inverter terminal strip
Terminal	Terminal
► 6 (T/RX+)	► Pin 3 - RX+
► 9 (T/RX-)	► Pin 4- RX-
► 10 (R/TX+)	► Pin 1 - TX+
► 13 (R/TX-)	► Pin 2 TX-

2. Insert the RJ1plug into any RJ11 socket on inverter 1.
3. Close the inverter if no other inverters are to be connected.

Connect the inverters to each other

- Wiring using the RJ11 cable.
- Where to connect: RJ11 sockets.

Procedure

1. Open the inverter as shown in the inverter‘s instructions.
2. Insert the self-made cable with the RJ11 plug into any RJ11 socket on inverter 1. Connect to Solar-Log™ at the other end.
3. Insert the RJ11 cable into the second RJ11 socket on the first inverter and into any RJ11 socket on the second inverter.
4. Connect the other inverters to each other in the same way.
5. Close inverters.

31 Europa-Solar AG

31.1 Europa-Solar AG

Termination	Addressing	Interface
Yes	No	RS422

Select „Europa Solar“ during device detection.

Overview

- Integrated interface.
- Where to connect: RJ45 socket inside the inverter.
- 4-pin cable – only at the RS422 interface.
- Communication address does not have to be assigned.

Note

The order in which the inverters are displayed in the Solar-Log™ after detection is random. We strongly recommend that you change the order of the inverters immediately after detection at startup, in the Configuration | Devices | Configuration | Order dialog box.

► The inverters can be identified using the displayed serial number.

- Installation steps:
  - Switch off the inverters and Solar-Log™.
  - Connect inverters to the Solar-Log™.
  - Connect the inverters to each other.

Connect inverters to the Solar-Log™

The wiring is done using a

- self-made cable connection with RS485 data cable.

Caution

Risk of damage to the unit!
The Solar-Log™ also has an RJ45 socket, which must never be connected to the RJ45 socket on the inverter.

► Only connect inverters via the RS422 interface.

Procedure

1. Open the inverter as shown in the inverter's instructions.
2. If you are making the cable yourself, connect the wires as shown in the following diagram:

Solar-Log™ Base RS422	RJ45 inverter
Terminal	PIN
► 6 (T/RX+)	► Pin 3
► 9 (T/RX-)	► Pin 6
► 10 (R/TX+)	► Pin 1
► 13 (R/TX-)	► Pin 2

3. Insert the RJ45 plug into any RJ45 socket on inverter 1.
4. If no further inverter is connected, terminate the inverter according to the instructions for the inverter.
5. Close the inverter if no other inverters are to be connected.

Connect the inverters to each other

- Connect using a network cable (patch cable).
- Where to connect: RJ45 socket inside the inverter.

Procedure

1. Open the inverter as shown in the inverter's instructions.
2. Insert the RJ45 plug into any RJ45 socket on inverter 1.
3. Insert the other end of the wire into any RJ45 socket on inverter 2.
4. Connect the other inverters to each other in the same way.
5. Terminate the last inverter according to the inverter instructions.
6. Close inverters.

32 Evoco

32.1 Evoco

Termination	Addressing	Interface
Yes	Yes	RS485

Select „Evoco“ during device detection.

Overview

- Integrated interface.
- Where to connect: Between the COM round sockets on the outside of the inverter.
- 2-pin wiring.
- Communication address must be allocated.
- Installation steps:
  - Switch off the inverters and Solar-Log™.
  - Connect inverters to the Solar-Log™.
  - Connect the inverters to each other.
  - Allocate communication address.

Connect inverters to the Solar-Log™

The wiring is done using a

- ready-made data cable (supplied with the inverter)

or

- self-made, shielded 2 wire data cable with round plug.

Procedure

1. If you are making the cable yourself, connect the wires as shown in the following diagram:

Solar-Log™ Base RS485 (A) / (B)	Inverter round socket
Terminal	PIN
► (A) 6 or (B) 10 (Data+)	► 1
► (A) 9 or (B) 13 (Data-)	► 2

2. Insert the round plug into any COM round socket on the inverter.
3. If no further inverter is connected, terminate the inverter according to the instructions for the inverter.

Connect the inverters to each other

- Connect using an Evoco daisy chain cable.
- Where to connect: Between the COM round sockets on the outside of the inverter.

Procedure

1. Insert the round plug into any round socket on inverter 1.
2. Insert the other end of the cable into any round socket on inverter 2.
3. Connect the other inverters to each other in the same way.
4. Terminate the last inverter according to the inverter instructions.

Allocate communication address

- Recommendation: Continuous numbering starting with 1.
- Default settings on the inverter: Communication address 1.
- Setting: Using the inverter display.
- Procedure: Start according to the inverter's instructions.

33 FIMER S.p.A.

33.1 PVS 10.0-TL / 12,5-TL / 15.0-TL (Sunspec via RS485)

Termination	Addressing	Interface
Yes	Yes	RS485

Select “Fimer: Sunspec“ during device detection.

Overview

- Integrated interface.
- Where to connect: RS485 terminal block, inside on the communication and control board of the inverter.
- 3-pin wiring.
- The communication address has to be assigned.
- Installation steps:
  - Switch off the inverters and the Solar-Log™.
  - Connect the inverters to the Solar-Log™.
  - Connect the inverters to each other.
  - Set the communication address according to the inverter‘s instructions.

Connect the inverters to the Solar-Log™

The wiring is done using a

- self-made RS485 data cable.

Procedure

1. Open the inverter as shown in the inverter‘s instructions.
2. If you are making the cable yourself, connect the wires as shown in the following diagram:

Solar-Log™ Base RS485 (A) / (B)	Inverter RS485 Terminal block
Terminal	Terminal
► (A) 6 or (B) 10 (Data+)	► 485+
► (A) 8 or (B) 12 GND	► RTN
► (A) 9 or (B) 13 (Data-)	► 485-

3. If no further inverter is connected, terminate the bus (see manufacturer‘s manual).
4. Close the inverter if no other inverters are to be connected.

Connect the inverters to each other

- Where to connect: RS485 terminal block, inside on the communication and control board of the inverter.
- 3-pin wiring.
- Wiring (see manufacturer‘s manual)

Allocate communication address

- Setting: According to the inverter manual.

Note

The inverter address is set via the integrated WEB user interface of the inverter. (See manufacturer's manual)

Note

The communication line must be terminated. (See manufacturer's manual)

Note

The total length of the communication cable should not exceed 1000 meters.
A maximum of 62 inverters can be connected to one RS485 bus.

Note

The PM management of the inverter is deactivated by default. If the inverter is to be controlled remotely, the PM management must be activated via the integrated WEB user interface of the inverter. (See manufacturer's manual).

33.2 Fimer - PVS 50-TL / 60-TL (Sunspec via RS485)

Termination	Addressing	Interface
Switch	Yes	RS485

Select „FIMER: Sunspec“ during device detection.

Overview

- Integrated interface.
- Where to connect: RS485 terminal connector, inside on the communication and control board of the inverter.
- 3-pin wiring.
- The communication address has to be assigned.
- Installation steps:
  - Switch off the inverters and the Solar-Log™.
  - Connect the inverters to the Solar-Log™.
  - Connect the inverters to each other.
  - Set the communication address according to the inverter‘s instructions.

Connect the inverters to the Solar-Log™

The wiring is done using a

- self-made RS485 data cable.

Procedure

1. Open the inverter as shown in the inverter‘s instructions.
2. If you are making the cable yourself, connect the wires as shown in the following diagram:

Solar-Log™ Base RS485 (A) / (B)	Inverter RS485 Terminal connector
Terminal	PIN
► (A) 6 or (B) 10 (Data+)	► RS485 +T/R
► (A) 8 or (B) 12 GND	► RTN
► (A) 9 or (B) 13 (Data-)	► RS485 -T/R

3. Terminate the inverter if no additional inverters are to be connected:
   Set the DIP switch for the terminal resistor to ON.
4. Close the inverter if no other inverters are to be connected.

Connect the inverters to each other

- Where to connect: RS485 terminal block, inside on the communication and control board of the inverter.
- 3-pin wiring.

Procedure

1. Open the inverter as shown in the inverter's instructions.
2. If you are making the cable yourself, connect the wires as shown in the following diagram:

Inverter RS485 Terminal connector	Inverter RS485 Terminal connector
PIN	PIN
► RS485 +T/R	► RS485 +T/R
► RTN	► RTN
► RS485 -T/R	► RS485 -T/R

3. Connect the terminals of inverter 1 and the corresponding terminals of inverter 2 (according to inverter instructions).
4. Weitere Wechselrichter untereinander auf die gleiche Art verbinden.
5. Connect the other inverters to each other in the same way.
6. Terminate the last inverter.
   Set the DIP switch for the terminal resistor to ON.
7. Close inverters.

Assign the communication address

1. Recommendation: Continuous numbering starting with 2.
   Address range 2 - 63.
2. Setting: Start according to the inverter's instructions.

Note

The inverter address is set via the integrated WEB user interface of the inverter. (See manufacturer's manual).

Note

The communication has to be terminated on both ends of the bus.

Note

The total length of the communication cable should not exceed 1000 meters.
A maximum of 62 inverters can be connected to one RS485 bus.

Note

The PM management of the inverter is deactivated by default. If the inverter is to be controlled remotely, the PM management must be activated via the integrated WEB user interface of the inverter. (See manufacturer's manual).

33.3 Fimer - PVS 100-TL / 120-TL / 175-TL (Sunspec via RS485)

Termination	Addressing	Interface
Switch	Yes	RS485

Select „FIMER: Sunspec“ during device detection.

Overview

- Integrated interface.
- Where to connect: RS485 terminal block, inside on the communication and control board of the inverter.
- 3-pin wiring.
- The communication address has to be assigned.
- Installation steps:
  - Switch off the inverters and the Solar-Log™.
  - Connect the inverters to the Solar-Log™.
  - Connect the inverters to each other.
  - Set the communication address according to the inverter‘s instructions.

Connect the inverters to the Solar-Log™

The wiring is done using a

- self-made RS485 data cable.

Procedure

1. Open the inverter as shown in the inverter‘s instructions.
2. If you are making the cable yourself, connect the wires as shown in the following diagram:

Solar-Log™ Base RS485 (A) / (B)	Inverter RS485 Terminal block
Terminal	Terminal
► (A) 6 or (B) 10 (Data+)	► 485+
► (A) 8 or (B) 12 GND	► RTN
► (A) 9 or (B) 13 (Data-)	► 485-

3. Terminate the inverter if no additional inverters are to be connected:
   Set the DIP switch for the terminal resistor to ON.
4. Close the inverter if no other inverters are to be connected.

Connect the inverters to each other

- Where to connect: RS485 terminal block, inside on the communication and control board of the inverter.
- 3-pin wiring.

Procedure

1. Open the inverter as shown in the inverter's instructions.
2. If you are making the cable yourself, connect the wires as shown in the following diagram:

Inverter RS485 Terminal block	Inverter RS485 Terminal block
Terminal	Terminal
► 485+	► 485+
► RTN	► RTN
► 485-	► 485-

3. Connect the terminals of inverter 1 and the corresponding terminals of inverter 2 (according to inverter instructions).
4. Weitere Wechselrichter untereinander auf die gleiche Art verbinden.
5. Connect the other inverters to each other in the same way.
6. Terminate the last inverter.
   Set the DIP switch for the terminal resistor to ON.
7. Close inverters.

Assign the communication address

1. Recommendation: Continuous numbering starting with 2.
   Address range 2 - 63.
2. Setting: Start according to the inverter's instructions.

Note

The inverter address is set via the integrated WEB user interface of the inverter. (See manufacturer's manual).

Note

The communication has to be terminated on both ends of the bus.

Note

The total length of the communication cable should not exceed 1000 meters.
A maximum of 62 inverters can be connected to one RS485 bus.

Note

The PM management of the inverter is deactivated by default. If the inverter is to be controlled remotely, the PM management must be activated via the integrated WEB user interface of the inverter. (See manufacturer's manual).

33.4 Fimer - PVS-TL Sunspec via Ethernet

Termination	Addressing	Interface
No	Yes	Ethernet

Select “Fimer: Sunspec“ during device detection.

Supported models:

- 10.0-TL, 12,5-TL, 15.0-TL, 20.0-TL, 30.0-TL, 33.0-TL, 50.0-TL, 60.0-TL, 100.0-TL, 120.0-TL, 175-TL

Overview

- Integrated interface.
- The IP address for the inverter has to be either assigned via DHCP* or a static IP has to be assigned.
- Connected using network cable (patch cable) and Ethernet router.
- Installation steps:
  - Turn the Solar-Log™ off.
  - Turn the inverters off.
  - Connect inverters to the router.
  - Connect the Solar-Log™ to the router.

Connect the inverters to the Solar-Log™

- The wiring is done using a network cable (patch cable) and
- the Ethernet router.

Connect the inverters to each other

The inverters are connected together using the RJ45 interface and, if needed, a router.
Follow the connection setup according to the inverter’s instructions.

Assigning IP addresses

- In addition to a static, fixed IP, a dynamic IP address can also be assigned.
- Please select an IP address with the same class C subnet as the Solar-Log™.
- Example: The Solar-Log™ has the IP address 192.168.178.49.
- The inverter in this case has to have a free IP address in the same range (from 192.168.178.1 to 192.168.178.254).
- Procedure: Start according to the inverter‘s instructions.

*Dynamic IP address (DHCP) for detection and communication:

The Solar-Log™, inverter and router have to be set to obtain their IP addresses automatically (DHCP) and be in the same class C subnet.

Very important!

For the connection of the devices of the respective manufacturer, please observe the manufacturer‘s documentation in the respective valid version.

Detection via the Solar-Log™ WEB Interface

- For detection on the Solar-Log™, select the device class under the menu Configuration | Device | Definition | Interface with the plus symbol and then select FIMER as the manufacturer, Sunspec as the type and the interface. Confirm your selection with OK.
- Save your selections and then start the Device Detection under Configuration | Device | Detection and start the device detection.



Note

A maximum of 40 inverters can be connected in the bus.

34 FoxESS

34.1 FoxESS - R series

Termination	Addressing	Interface
-*	-	RS485

Selections available under „FoxESS“.

Supported models:

- R75, R100, R110, R120, R136

Overview

- Integrated interface.
- Where to connect: Proprietary connector on bottom of device (see manufacturer's description).
- 2-pin wiring.
- Installation steps:
  - Switch off the inverters and Solar-Log™.
  - Connect inverters to the Solar-Log™.
  - Connect the inverter/hybrid system to each other (see manufacturer's manual).
  - Communication address (see manufacturer's manual).

Connect the inverters to the Solar-Log™.

The wiring is done using a

- self-made shielded data cable.

Procedure according to the manufacturer's instructions

1. Prepare access to the communication interface according to the instructions for the inverter.
2. If you are making the cable yourself, connect the wires as shown in the following diagram:

Solar-Log™ Base RS485 (A) / (B)	Rubber core at the inverter
PIN	PIN
► (A) 6 or (B) 10 (Data+)	► 2 RS485A1
► (A) 9 or (B) 13 (Data-)	► 3 RS485B2

3. *Terminate the last inverter according to the manufacturer's instructions.

Connect the inverters to each other:

- See manufacturer's manual.



Important!

The communication interface is only active when DC voltage is applied to the device and it is ready for operation.

Very important!

For the connection of the devices of the respective manufacturer, please observe the manufacturer's documentation in the respective valid version.

35 Fronius

35.1 Fronius with ComCard

Termination	Addressing	Interface
Connection plug Bridge 4-3 + 5-6	Yes	RS422

Select “Fronius: SolarNet“ during device detection.

Supported models:

- Agilo 75.0-3, Agilo 100.0-3, Agilo TL 360.0-3, Agilo TL 460.0-3, CL-Serie (all), IG-Serie (all), IG Plus, IG Plus V, IG Plus V2, IG Plus V3, IG Plus 30V-1, IG TL (all), TL (all), V2 (all)

Overview

- The Fronius ComCard RS422 interface integrated as an option; otherwise can be retrofitted using "ComCard retrofit".
- Where to connect: RJ45 socket on the outside of the inverter.
- 4 wire cabling.
- Communication address must be allocated:
  - Recommendation: Continuous numbering starting with 1.
  - Setting: Using the inverter display.
  - Procedure: Start according to the inverter's instructions.
- Installation steps:
  - Switch off the inverters and Solar-Log™.
  - (Install Fronius ComCard RS485 interface into the inverter).
  - Connect inverters to the Solar-Log™.
  - Connect the inverters to each other.
  - Allocate communication address.

Installing Fronius ComCard RS422 interface

Procedure

► Install the Fronius ComCard RS422 interface in the inverter in accordance with the interface board installation instructions.

Connect inverters to the Solar-Log™

The wiring is done using a

- self-made data cable with RJ45 plug.



Caution

Risk of damage to the unit!
The Solar-Log™ also has an RJ45 socket, which must never be connected to the RJ45 socket on the inverter.

► Only connect inverters via the RS422 interface.

Procedure

1. If you are making the cable yourself, connect the wires as shown in the following diagram:

Solar-Log™ Base RS422	RJ45 inverter
Terminal	PIN
► 6 (T/RX+)	► 4
► 9 (T/RX-)	► 5
► 10 (R/TX+)	► 3
► 13 (R/TX-)	► 6

2. In the inverter insert the RJ45 plug into the IN socket.
3. If no further inverter connected, terminate the inverter:
   Insert the supplied connection plug into the RJ45 OUT socket on the inverter.
   The connection plug is an 8-pin dummy plug with bridged wires: Bridge wires 3 and 4 and wires 5 and 6.

Connect the inverters to each other

- Connect using a network cable (patch cable).
- Where to connect: RJ45 socket on the outside of the inverter.

Procedure

1. Insert the RJ45 plug in inverter 1 into the OUT socket.
2. Insert the other end of the wire into the IN socket on inverter 2.
3. Connect the other inverters to each other in the same way.
4. Terminate the last inverter.
   Insert the supplied connection plug into the RJ45 OUT socket.
5. Close inverters.

Allocate communication address

- Recommendation: Continuous numbering starting with 1.
- Setting: Using the inverter display.
- Procedure: Start according to the inverter's instructions.

35.2 Fronius RL

Termination	Addressing	Interface
Jumper	No	RS485

Select “Fronius: RL“ during device detection.

Overview

- Integrated interface.
- Where to connect: Round socket on the inverter.
- 2-pin wiring.
- Communication address does not have to be assigned.
- Installation steps:
  - Switch off the inverters and the Solar-Log™.
  - Connect the inverters to the Solar-Log™.
  - Connect the inverters to each other.

Connect the inverters to the Solar-Log™.

- The wiring is done using a self-made cable connection with the round plug.
  The round plug must be obtained from the manufacturer.

Procedure

1. If you are making the cable yourself, connect the wires as shown in the following diagram:

Solar-Log™ Base RS485 (A) / (B)	Inverters
Terminal	Round socket
► (A) 6 or (B) 10 (Data+)	► 1 Data +
► (A) 8 or (B) 12 GND	► 2 use the cable shield
► (A) 9 or (B) 13 (Data-)	► 3 Data -

Connect the inverters to each other.

- Connect using a 2-wire, shielded data cable.
- Where to connect: Round socket on the inverter.

Procedure

1. self-made cable connection with round plug.
2. Also connect the cable to the next inverter in round plug 1.
3. Connect the other inverters to each other in the same way.

35.3 Fronius – Argeno 125k

Termination	Addressing	Interface
No	-*	Ethernet

Select “Fronius: Argeno“ during device detection.

Overview

- Integrated interface.
- Where to connect: 3 x LAN interfaces at the bottom inside the inverter.
- LAN interfaces:
  *2 x LAN side by side LAN 1 and LAN 2 these have an internal switch and require an IP address via DHCP.
  1 x LAN (LAN direct) This interface is used to configure the inverter and has the static IP address 169.254.1.1 (Direct connection via LAN cable to the laptop. See manufacturer‘s instructions).
- Wiring via network cable (patch cable) and Ethernet router or switch. (Only applies to LAN interfaces - LAN 1 or LAN 2)
- *Communication address can be assigned.
- Installation steps:
  - Switch off the inverter and Solar-Log™.
  - Connect the inverter to the network (RJ45).
  - Connect Solar-Log™ to the network (RJ45).
  - Assign a static/fixed IP address if necessary.

Connect inverters to the Solar-Log™

The wiring is done using a

- network cable (patch cable) and the
- Ethernet router or switch.

Connect the inverters to each other

The inverters are connected to each other via the RJ45 interface located at the bottom inside the inverter. Establish the connection according to the inverter instructions.

*IP address assignment via LAN interfaces 1 or 2

- A static/fixed IP address can be assigned. However, DHCP must be enabled for the initial configuration. (See the inverter instructions)
- Please select an IP address from the same class C subnet of the Solar-Log™.
  Example: Solar-Log™ has 192.168.178.49.
  In this case, the inverters must have an IP address from the range 192.168.178.xxx (xxx stands for a number between 1 - 254).
- Procedure: According to the instructions for the inverter.

Detection via the Solar-Log™ WEB interface

- For detection on the Solar-Log™, select the device class under the menu Configuration | Device | Definition | Interface with the plus symbol and then select Fronius as the manufacturer and Argeno. Confirm your selection with OK.
- Save your selections and then start the Device Detection under Configuration | Device | Detection and start the device detection.

Note

The settings, maintenance, and commissioning are carried out via the web browser using a direct connection between the LAN direct interface and the laptop.
(See the inverter manufacturer's instructions.)

Note about Modbus/TCP

Modbus/TCP must be enabled in order to use it. The following steps are necessary:

- Go to the user interface of the inverter.
- Go to the Modbus TCP/UDP activation entry under Configuration - Communication - Ethernet - Modbus TCP/UPD and enable it.
- Enable write protection if necessary.
- Set the port for access (default: 502).

This activates access via Modbus / TCP. (Be sure to follow the manufacturer's instructions.)

35.4 Fronius ECO/Galvo/Symo series (RS422)

For the ECO/Galvo/Symo series, Fronius offers two different inverter types:

- ECO, Galvo and Symo, as well as the light version of the series.

The instructions for wiring the inverters to the Solar-Log™ are identical to those for Fronius inverters with ComCard. Refer to the section on „Fronius with ComCard“ for more information.

General information on the Galvo / Symo series

The Symo has a data manager integrated as standard ex works. This data manager acts as a bus master. To enable communication with the Solar-Log™, the Datamanager must be removed. (Only necessary for models with a Datamanager that cannot be set to „Slave“ mode)
As the ComCard connection is permanently installed in the Galvo/Symo series, no additional ComCard is required.
No Datamanager is integrated in the Symo-Light models.

Note

The Galvo / Symo series is pre-configured for the "Solar.Net" protocol.

► Check the settings if necessary.

Note

For inverter detection to work with the Solar-Log™, each inverter needs its own address. (Consecutive numbering starting with 1 is recommended)
This can be set on the inverter display under Settings / Datacom / Inverter number.
For further wiring instructions, see the Fronius inverter manual.

Important note regarding the Datamanager!

To ensure communication with the Solar-Log, the Datamanager must be set to „Slave“ during inverter detection.
Since the introduction of Datamanager 2.0, there is no need to expand the Datamanager.
The older Datamanagers did not yet have this function changeover to „Slave“, which is why an expansion was necessary here.

General information on the ECO series:

This device is equipped with the Datamanager 2.0 by default.
The Datamanager has to be set as a slave in order for communication with the Solar-Log™ to work. The ComCard connection is a fixed component of the inverter so an additional ComCard is not required. The Light version does not come with this Datamanager so no settings need to be adjusted here.

35.5 Fronius ECO/Galvo/Primo/Symo series via Ethernet

Termination	Addressing	Interface
No	Yes	Ethernet

Select “Fronius: SunSpec Modbus/SolarAPI“ during device detection.

Supported models:

- Eco 25.0-3-S, Eco 27.0-3-S, Galvo 1.5-1, Galvo 2.0-1, Galvo 2.5-1, Galvo 3.0-1, Galvo 3.1-1, Primo 3.0-1, Primo 3.5-1, Primo 3.6-1, Primo 3.8-1, Primo 4.0-1, Primo 4.6-1, Primo 5.0-1, Primo 6.0-1, Primo 7.6-1, Primo 8.2-1, Primo 10.0-1, Primo 11.4-1, Primo 12.5-1, Primo 15.0-1, Symo 3.0-3, Symo 3.0-3-S, Symo 3.7-3, Symo 3.7-3-S, Symo 4.5-3, Symo 4.5-3-S, Symo 5.0-3, Symo 5.5-3, Symo 6.0-3, Symo 6.7-3, Symo 7.0-3, Symo 8.2-3, Symo 10.0-3, Symo 12.0-3, Symo 12.5-3, Symo 15.0-3, Symo 17.5-3, Symo 20.0-3, Symo 22.7-3, Symo 24.0-3, Symo Advanced 10.0-3-M, Symo Advanced 12.5-3-M, Symo Advanced 15.0-3-M, Symo Advanced 17.5-3-M, Symo Advanced 20.0-3-M

Overview

- Integrated interface.
- The inverter‘s IP address has to be assigned.
- Connect using network cable (patch cable) and Ethernet router or switch.
- Installation steps:
  - The inverter has to be assigned a static IP address.
  - Switch off the inverters and the Solar-Log™.
  - Connect inverters to the Solar-Log™ (RJ45).
  - Connect the inverters to each other (RJ45).

Connect the inverters to the Solar-Log™.

The wiring is done using a

- network cable (patch cable) and the
- Ethernet router or switch.

Connect the inverters to each other.

The inverters are connected together using
the RJ45 interface and, if needed, a router or switch.
Follow the connection setup according to the inverter‘s instructions.

Assigning IP addresses

- A static IP address has to be assigned to the inverter via the display.
- Please select an IP address with the same class C subnet as the Solar-Log™.
  For example: The Solar-Log™ has the IP address 192.168.178.49.
  The inverter in this case has to have a free IP address in the same range (from 192.168.178.1 to 192.168.178.254).
- Procedure: Start according to the inverter‘s instructions.



Note

The "Data export via Modbus" settings in the Fronius Symo inverter have to be changed to "TCP" in order for the inverter detection to be successful.

► Follow the procedures according to the inverter manufacturer's manual.

Note

If the settings were switched to TCP, the automatically applied inverter settings should not be changes because otherwise communication with the Solar-Log™ will not work.

Note

If several Fronius inverters are connected to a Solar-Log™ via Ethernet, only one Datamanager is required.

Detection via the Solar-Log™ WEB Interface

- For detection on the Solar-Log™, select the device class under the menu Configuration | Device | Definition | Interface with the plus symbol and then select Fronius as the manufacturer. Confirm your selection with OK.
- Save your selections and then start the Device Detection under Configuration | Device | Detection.

Note

To ensure communication with the Solar-Log, the Sunspec register of the inverters must be set to Float and not to INT+SF (scale factor).
Please refer to the inverter manufacturer's instructions.

35.6 Fronius Tauro

Termination	Adressing	Interface
No	Yes	Ethernet
Yes	Yes	RS485 (Modbus)

Select “Fronius: Gen24“ during device detection.

Supported models:

- 50-3-D, ECO 50-3-D, ECO 99-3-D, ECO 100-3-D, 50-3-P, ECO 50-3-P, ECO 99-3-P, ECO 100-3-P

Overview - RS485 (Modbus)

- Integrated interface.
- Where to connect: Interface in the inverter.
- 3-pin wiring.
- Communication address must be assigned.
  - Recommendation: Sequential numbering, starting with 1.
  - Setting: Via the web interface of the inverter.
  - Procedure: According to the inverter instructions.
- Installation steps:
  - Switch off the inverter and Solar-Log™.
  - Connect the inverter to the Solar-Log™.
  - Connect the inverters to each other.
  - Assign communication address.

Procedure - RS485 (Modbus)

1. If you are making the cable yourself, connect the wires as shown in the following diagram:

Solar-Log™ Base RS485	Modbus connection terminal
Terminal	Terminal
► (A) 6 or (B) 10 (Data+)	► M0 +
► (A) 9 or (B) 13 (Data-)	► M0 -
► (A) 8 or (B) 12 GND	► GND

2. If no other inverter is connected, terminate according to the inverter instructions.

Connect the inverters to each other

- Wiring via communication cable (see inverter instructions).
- Where to connect: Interface in the inverter.

Procedure

- According to the inverter instructions.

Communication address assigned

- Recommendation: Sequential numbering, starting with 1.
- Setting: Via web interface of the inverter.
- Procedure: According to the inverter instructions.

Overview - Ethernet

- Integrated interface.
- IP address of the inverters can be assigned via DHCP as well as static/fixed.
- Wiring via network cable (patch cable) and Ethernet router or switch.
- Installation steps:
  - Assign IP address on the inverter statically/fixed or via DHCP.
  - Switch off the inverter and Solar-Log™.
  - Connect the inverter to the Solar-Log™ (RJ45).
  - Connect inverters to each other (RJ45).

Connect the inverter to the Solar-Log™

The wiring is done via

- Network cable (patch cable) and
- Ethernet router or switch.

Connecting the inverters to each other

The cabling of the inverters among each other is carried out according to the inverter instructions.

Assign IP address

- An IP address can be assigned via DHCP as well as via static/fixed IP address via the web interface of the inverter (see inverter instructions).
- Please select an IP address from the same class C subnet of the Solar-Log™.
  Example: Solar-Log™ has 192.168.178.49.
  In this case, the inverters must have an IP address from the range 192.168.178.xxx (xxx stands for a number between 1 - 254).
- Procedure: According to the instructions for the inverter.

Detection via the Solar-Log™ WEB Interface

- For detection on the Solar-Log™, select the device class under the menu Configuration | Device | Definition | Interface with the plus symbol and then select Fronius as the manufacturer and Type SunSpec Modbus/ SolarAPI. Confirm your selection with OK.
- Save your selections and then start the Device Detection under Configuration | Device | Detection.

Note

Always connect via LAN using the LAN 1 interface of the inverter, since the LAN 2 interface is reserved for communication between the inverters.

► The default IP address of the inverter is: 169.254.0.180

Note for communication via TCP

To enable communication between the Solar-Log™ and the Fronius Tauro, the following sliders must be activated via the configuration interface of the inverter in the settings under „Modbus“:

- Slave as Modbus TCP
- Inverter control via Modbus

Additional settings:

- Modbus-Port 502
- SunSpec Model Type int + SF (float“ also possible if required)
- Meter address 200

Note for communication via RTU

To enable communication between the Solar-Log™ and the Fronius Tauro, the following settings must be made via the configuration interface of the inverter under “Modbus data output”:

Modbus RTU interface 0:

- Select slave
- Baud rate: 19200
- Parity: None
- SunSpec Model Type: int + SF (float“ also possible if required)
- Meter address: 200
- Inverter address: 1 (this must be adapted to the number of inverters, e.g. inverter 1 address 1, inverter 2 address 2, etc.)
- Activate slider inverter control via Modbus

Optional:

Modbus RTU interface 1:

- Select master

Very important!

For the connection of the devices of the respective manufacturer, please observe the manufacturer‘s documentation in the respective valid version.

35.7 Fronius VERTO

Termination	Adressing	Interface
No	Yes	Ethernet
Yes	Yes	RS485 (Modbus)

Select “Fronius: Gen24“ during device detection.

Supported models:

- 15.0, 18.0, 25.0, 27.0, 30.0, 33.3, 36.0

Overview - RS485 (Modbus)

- Integrated interface.
- Where to connect: Interface in the inverter.
- 3-pin wiring.
- Communication address must be assigned.
  - Recommendation: Sequential numbering, starting with 1.
  - Setting: Via the web interface of the inverter.
  - Procedure: According to the inverter instructions.
- Installation steps:
  - Switch off the inverter and Solar-Log™.
  - Connect the inverter to the Solar-Log™.
  - Connect the inverters to each other.
  - Assign communication address.

Procedure - RS485 (Modbus)

1. If you are making the cable yourself, connect the wires as shown in the following diagram:

Solar-Log™ Base RS485	Modbus connection terminal
Terminal	Terminal
► (A) 6 or (B) 10 (Data+)	► M0 +
► (A) 9 or (B) 13 (Data-)	► M0 -
► (A) 8 or (B) 12 GND	► GND

2. If no other inverter is connected, terminate according to the inverter instructions.

Connect the inverters to each other

- Wiring via communication cable (see inverter instructions).
- Where to connect: Interface in the inverter.

Procedure

- According to the inverter instructions.

Communication address assigned

- Recommendation: Sequential numbering, starting with 1.
- Setting: Via web interface of the inverter.
- Procedure: According to the inverter instructions.

Overview - Ethernet

- Integrated interface.
- IP address of the inverters can be assigned via DHCP as well as static/fixed.
- Wiring via network cable (patch cable) and Ethernet router or switch.
- Installation steps:
  - Assign IP address on the inverter statically/fixed or via DHCP.
  - Switch off the inverter and Solar-Log™.
  - Connect the inverter to the Solar-Log™ (RJ45).
  - Connect inverters to each other (RJ45).

Connect the inverter to the Solar-Log™

The wiring is done via

- Network cable (patch cable) and
- Ethernet router or switch.

Connecting the inverters to each other

The cabling of the inverters among each other is carried out according to the inverter instructions.

Assign IP address

- An IP address can be assigned via DHCP as well as via static/fixed IP address via the web interface of the inverter (see inverter instructions).
- Please select an IP address from the same class C subnet of the Solar-Log™.
  Example: Solar-Log™ has 192.168.178.49.
  In this case, the inverters must have an IP address from the range 192.168.178.xxx (xxx stands for a number between 1 - 254).
- Procedure: According to the instructions for the inverter.

Detection via the Solar-Log™ WEB Interface

- For detection on the Solar-Log™, select the device class under the menu Configuration | Device | Definition | Interface with the plus symbol and then select Fronius as the manufacturer and Type SunSpec Modbus/ SolarAPI. Confirm your selection with OK.
- Save your selections and then start the Device Detection under Configuration | Device | Detection.

Note

Always connect via LAN using the LAN 1 interface of the inverter, since the LAN 2 interface is reserved for communication between the inverters.

► The default IP address of the inverter is: 169.254.0.180

Note

The initial commissioning of the inverter requires some settings that can be made either via the browser or via the Fronius Solar.start app (available via the App Store or Google Play)

Default IP address via browser:

► The standard IP address of the inverter via Ethernet is: 169.254.0.180

Note for communication via TCP

To enable communication and control between the Solar-Log™ and the Fronius VERTO, the setting “Control secondary inverter via Modbus TCP” must be activated in the inverter configuration.
The following settings are then available:

- Modbus port:
  Enter port 502 here and the inverter must be activated as a slave.
- SunSpec Model Type int + SF (if required, “float” is also possible)
- Meter address:
  The identification number assigned to the meter (Unit ID) must be entered here, which can be found on the user interface of the inverter in the Communication - Modbus menu. Default setting: 200
- Allow control:
  Activate this option to enable control of the inverter via Modbus.

Note for communication via RTU

To enable communication between the Solar-Log™ and the Fronius VERTO, the following settings must be made via the configuration interface of the inverter under “Modbus Server”:
Modbus RTU interface 0:

- Baud rate:
  Make sure that this is the same on the send and receive side.
- Parity: None
- SunSpec Model Type: int + SF (if required, “float” is also possible)
- Meter address:
  The identification number assigned to the meter (Unit ID) must be entered here, which can be found on the user interface of the inverter in the Communication - Modbus menu. Default setting: 200
- Inverter address:
  The identification number (Unit ID) assigned to the inverter must be entered here, which can be found on the user interface of the inverter in the Communication - Modbus menu. Default setting: 1

Optional:
Modbus RTU interface 1:

- Select master

Very important!

For the connection of the devices of the respective manufacturer, please observe the manufacturer’s documentation in the respective valid version.

36 Gefran

36.1 Gefran

Termination	Addressing	Interface
Switch	Yes	RS485

Select “Gefran“ during device detection.

Supported models:

- APV-S-10k-AE-TL-1, APV-S-10k-AE-TL-2, APV-S-10k-EE-TL-1, APV-S-12k-AE-TL-1, APV-S-12k-AE-TL-2, APV-S-15k-AE-TL-2, APV-S-15k-EE-TL-1, APV-S-18k-AE-TL-2, APV-S-20k-AE-TL-2, APV-S-20k-AE-TL-3, APV-S-20k-EE-TL-1

Overview

- Integrated interface (two independent RS485 ports) (see Figure: Gefran RS485 terminal strip and termination).
- Where to connect: Terminal strip inside the inverter.
- 2-pin wiring.
- Communication address has to be assigned.
- Installation steps:
  - Switch off the inverters and the Solar-Log™.
  - Connect inverters to the Solar-Log™.
  - Connect the inverters to each other.
  - Allocate communication address.

Connect inverters to the Solar-Log™

The wiring is done using a

- self-made, shielded 2-wire data cable.

Note

The two independent RS485 ports allow for different ways to wire the Solar-Log™ to the inverters. In addition there are different pin assignments based on whether port A or B is used.

Procedure

1. Open the inverter as shown in the inverter's instructions.
2. If you are making the cable yourself, connect the wires as shown in the following diagram:

Solar-Log™ Base RS485 (A) / (B)	Terminal strip inside the inverter
Terminal	Terminal strip RS485 (TB3)
► (A) 6 or (B) 10 (Data+)	► Pin 1 or 2 (Port A) or Pin 9 or 10 (Port B)
► (A) 9 or (B) 13 (Data-)	► Pin 3 or 4 (Port A) or Pin 11 or 12 (Port B)

3. If no further inverter connected, terminate the inverter:
   Set the switch (switch S1 for port A, switch S3 for port B) in the inverter to "1" for terminal resistance.
4. Close the inverter.

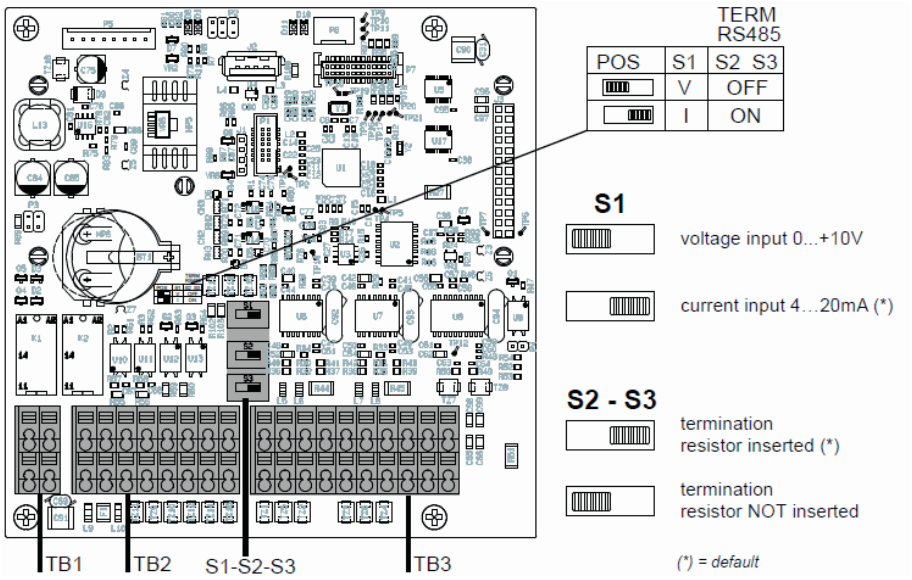

Fig.: Gefran RS485 terminal strip and termination (Source: Gefran)

Connect the inverters to each other

- Where to connect: Terminal strip inside the inverter.
- 2-pin wiring.

Procedure

1. Open the inverter as shown in the inverter's instructions.
2. If you are making the cable yourself, connect the wires as shown in the following diagram:

Terminal strip inside the inverter	Terminal strip inside the inverter
Terminal RS485 (TB3)	Terminal RS485 (TB3)
► Pin 1 or 2 (Port A) or Pin 9 or 10 (Port B)	► Pin 2 or 1 (Port A) or Pin 10 or 9 (Port B)
► Pin 3 or 4 (Port A) or Pin 11 or 12 (Port B)	► Pin 4 or 3 (Port A) or Pin 12 or 11 (Port B)

3. Connect terminals on inverter 1 to the corresponding terminals on inverter 2.
4. Connect the other inverters to each other in the same way (see Figure: 2-pin terminal TB3)
5. Terminate the last inverter.
   Set the switch (switch S1 for port A, switch S3 for port B) to "1" for terminal resistance.
6. Close inverters.

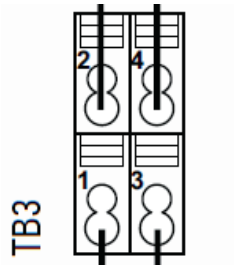

Fig.: 2-pin terminal TB3 (Source: Gefran)

Allocate communication address

- Recommendation: Continuous numbering starting with 1 going to 63.
- Setting: Using the inverter display.
- Procedure: Start according to the inverter's instructions.

Note

The communication port has to be configured. The settings are located in the inverter display under "Configuration -> Communication." The RS485 port used (A or B) has to be configured as follows: Baud rate: 9600bps; Settings: N81; Address: the respective bus address.

37 General Electric inverters (GE)

37.1 General Electric inverters (GE)

Termination	Addressing	Interface
No	Yes	Ethernet

Select “General Electric“ during device detection.

Supported models:

- SVT PVIN02KS, SVT PVIN03KS, SVT PVIN04KS, SVT PVIN04K6S, SVT PVIN05KS

Overview

- Integrated interface.
- Connected using network cable (patch cable) and Ethernet router or switch.
- Communication address must be allocated.
- Installation steps:
  - Allocate communication address.
  - Connect inverters to the Solar-Log™ (RJ45).
  - Connect the inverters to each other (RJ45).

Allocate communication address

- Recommendation: Continuous numbering starting with 1.
- Setting: Using the inverter display.
- Procedure: Before connecting to the Ethernet router or switch and allocating the IP address.

Connect inverters and the Solar-Log™.

The wiring is done using a

- network cable (patch cable) and the
- Ethernet router or switch.

Procedure

1. Set different unit IDs on each inverter in accordance with the inverter's instructions.
2. Connect the Solar-Log™ and the inverter to the router or switch.
3. Allocate an IP address to each inverter using the manufacturer's IP setting kit:

The first three number blocks like the Solar-Log™, e.g. 192.168.178.49.
The fourth number block: an address that is available, e.g. 192.168.178.50.

Details on using the IP setting kit can be found in the manufacturer's SVT monitoring manual.

Note

A maximum of 32 inverters can be connected to the interface.

38 Generic Sunspec Driver

Even if the manual for a manufacturer does not explicitly have information for the recognition selection via the Sunspec protocol, it is generally still possible to implement this. „Solar-Log“ has to be selected as the manufacturer and the „Sunspec“ as the type.

The following interfaces are available: RS485 and Ethernet.

The baud rate has to be explicitly defined. The following selection options are possible:

- 2400
- 4800
- 9600
- 19200
- 57600
- 115200

The wiring depends on the manufacturer and model.
It is important to note the following on the Solar-Log™ RS485 side:

- 1 Data+
- 4 Data+
- 3 GND

Refer to Chapter 1 „Connections“ for more information.

Special inverter instructions, such as activating the Sunspec protocol, are manufacturer specific. (Refer to the manufacturer‘s manual).

Requirements

Compliance to the Sunspec standard is a basic prerequisite to ensure that communication via the Sunspec protocol works. This requirement is usually fulfilled when there is a Sunspec certification for each inverter module (ask the manufacturer).

In the following list contains the models required (based on the Sunspec specification) to implement data recording, and active and reactive power control with the Solar-Log™.

Support of the following Sunspec models:

- Model 1 : Common-Model-Block
  - Manufacturer
  - Serial number
- Models 101,102,103,111,112 or 113 AC values
  - Yield
  - Uac1-3 (depending on the phases)
  - Iac1-3 (depending on the phases)
  - PAC
  - Temperature
  - Status
  - Error
  - DC values for the missing model 160

- Model 120: General Description
  - Maximal Device Output
- Model 160 (optional): DC values for several MPP trackers
  - PDC1-6
  - IDC1-6
  - UDC1-6
- Model 123: Control parameters
  - Power reduction
  - Reactive power control



Note

„Important: In line with power reductions and reactive power control, the tabs WMaxLimPct (5), WMaxLim_Ena (9), OutPFSet(10) and OutPFSet_Ena (14) are cyclically written in the Sunspec Model 123. It could be that some of these tabs cannot be cyclically written at frequent intervals for some devices. Please contact the manufacturer of the device before using the generic Sunspec driver for power management with the Solar-Log .“

39 GESOLAR

39.1 GESOLAR

Termination	Addressing	Interface
Yes	No	RS485

Select “GESOLAR“ during device detection.

Supported models:

- GES-2K8, GES-3K3TL, GES-3K8, GES-3K8TL, GES-4K, GES-4K6TL, GES-5K

Overview

- Integrated interface.
- Where to connect: RJ45 plug outside the housing floor.
- 2-pin wiring.
- Communication address does not have to be assigned.
- Installation steps:
  - Switch off the inverters and Solar-Log™.
  - Connect inverters to the Solar-Log™.
  - Connect the inverters to each other.

Connect inverters to the Solar-Log™

The wiring is done using a

- self-made cable connection with RS485 data cable.



Caution

Risk of damage to the unit!
The Solar-Log™ also has an RJ45 socket, which must never be connected to the RJ45 socket on the inverter.

► Only connect inverters via the RS485/422 Solar-Log™ interface(s).

Procedure

1. If you are making the cable yourself, connect the wires as shown in the following diagram:

Solar-Log™ Base RS485 (A) / (B)	RJ45 inverter
Terminal	PIN
► (A) 6 or (B) 10 (Data+)	► 7
► (A) 9 or (B) 13 (Data-)	► 8

2. Insert the RJ45 plug into the RJ45 socket on the inverter.
3. If no further inverter is connected, terminate the inverter according to the instructions for the inverter.

Connect the inverters to each other

- Connect using a network cable (patch cable).
- Where to connect: RJ45 sockets on the outside of the inverter.

Procedure

1. Insert the RJ45 plug into any RJ45 socket on inverter 1.
2. Insert the other end of the wire into any RJ45 socket on inverter 2.
3. Connect the other inverters to each other in the same way.
4. Terminate the last inverter in accordance with the inverter instructions.

40 Ginlong

40.1 Ginlong

Termination	Addressing	Interface
Yes	Yes	RS485

Select „Ginlong : 1G-4G“ during device detection.

Supported models:

- Solis-1P1K-4G, Solis-1P1.5K-4G, Solis-1P2K-4G, Solis-1P4K-4G, Solis-1P5K-4G, Solis-1P7K-4G, Solis-1P8K-4G, Solis-1P9K-4G, Solis-1P10K-4G, Solis-1.5K-1G, Solis-2K-1G, Solis-2.1K-1G, Solis-2.5K-2G, Solis-2.5K-2G-ST, Solis-2.5K-4G, Solis-2.5K-4G-ST, Solis-3K-1G, Solis-3K-2G, Solis-3K-2G-ST, Solis-3K-4G, Solis-3K-4G-ST, Solis-3.5K-1G, Solis-3.6K-2G, Solis-3.6K-2G-ST, Solis-3.6K-4G, Solis-3.6K-4G-ST, Solis-4K-1G, Solis-4K-2G, Solis-4K-4G, Solis-4.6K-1G, Solis-4.6K-2G, Solis-4.6K-4G, Solis-5K-1G, Solis-5K-2G, Solis-5K-4G, Solis-5K-4G-LV, Solis-6K-4G, Solis-8K-4G, Solis-10K-4G, Solis-10K-4G-LV, Solis-12K-4G, Solis-15K-4G, Solis-17K-4G, Solis-20K-4G, Solis-3P15K-4G (with developer firmware), Solis-9K-4G, Solis-mini-700, Solis-mini-700-LV, Solis-Mini-700-4G, Solis-mini-1000, Solis-Mini-1000-4G, Solis-mini-1200-LV, Solis-mini-1500, Solis-Mini-1500-4G, Solis-mini-2000, Solis-Mini-2000-4G, Solis-mini-2500, Solis-Mini-2500-4G, Solis-Mini-3000-4G, Solis-Mini-3600-4G, Solis-6K, Solis-6K-LV, Solis-10K, Solis-10K-LV, Solis-15K, Solis-15K-LV, Solis-20K, Solis-20K-HV, Solis-20K-LV, Solis-25K, Solis-25K-LV, Solis-25K-4G, Solis-30K, Solis-30K-LV, Solis-30K-4G, Solis-33K, Solis-33K-4G, Solis-36K-HV, Solis-40K, Solis-40K-HV, Solis-40K-4G, Solis-50K, Solis-60K-HV, Solis-60K-4G, Solis-70K-HV, Solis-70K-4G

Overview

- Interface integrated.
- Where to connect: Between the COM round sockets on the outside of the inverter.
- 2-pin wiring.
- Communication address must be allocated.
- Installation steps:
  - Switch off the inverters and Solar-Log™.
  - Connect inverters to the Solar-Log™.
  - Connect the inverters to each other.
  - Allocate communication address.

Note text MPP tracker:

There are models with one or two MPP trackers.
The models with a single MPP tracker have the ST (single tracker) at the end of the model name. Since the Solar-Log™ also detects models with two MPP trackers, the MPP not being used should be deactivated.

How to deactivate the MPP tracker:

Enter the value 0 for the module field and generator power in the Module field, Output & Label section under the Configuration | Device | Configuration | Configuration menu. Then click „save.“

Note!

It is important to note that there are two different wiring types for the Ginlong model.

► Refer to the wiring table further below.

Connect inverters to the Solar-Log™

The wiring is done using a

- self-made, shielded 2 wire data cable with round plug.

Procedure for models up to and including 15K

1. If you are making the cable yourself, connect the wires as shown in the following diagram:

Solar-Log™ Base RS485 (A) / (B)	Inverter COM1 (RS485)
Terminal	PIN
► (A) 6 or (B) 10 (Data+)	► 3 RS485 A
► (A) 8 or (B) 12 GND	► 2 GND
► (A) 9 or (B) 13 (Data-)	► 4 RS485 B

2. Connect the round plug with the inverter's COM1 round socket.
3. Terminate the inverter according to the manufacturer's instructions if no additional inverters are to be connected.

Connect the inverters to each other

- Wiring using Ginlong's daisy chain cable.
- Connect the cables according to the inverter manufacturer's instructions.
- Terminate the last inverter according to the inverter manufacturer's instructions.

Assign the communication address

- Recommendation: Continuous numbering starting with 1.
- Default settings on the inverter: Communication address 1.
- Setting: Using the inverter display.
- Procedure: Start according to the inverter manufacturer's instructions.

Procedure for models 20K and larger:

1. If you are making the cable yourself, connect the wires as shown in the following diagram:

Solar-Log™ Base RS485 (A) / (B)	Inverter RJ45
Terminal	Pin
► (A) 6 or (B) 10 (Data+)	► 1 RS485 A IN
► (A) 9 or (B) 13 (Data-)	► 2 RS485 B IN

2. Insert the RJ45 connector into the inverter's RJ45 OUT socket.
3. Terminate the inverter according to the manufacturer's instructions if no additional inverters are to be connected.

Connect the inverters to each other

- Wiring using Ginlong's daisy chain cable.
- Where to connect: RJ45 socket in the inverter.

Procedure:

1. Insert the RJ45 connector into the first inverter's RJ45 OUT socket.
2. Insert the other end of the cable into the RJ45 IN socket on second inverter.
3. Connect the other inverters to each other in the same way.
4. Terminate the last inverter according to the inverter manufacturer's instructions.

Assign the communication address

- Recommendation: Continuous numbering starting with 1.
- Default settings on the inverter: Communication address 1.
- Setting: Using the inverter's display.
- Procedure: Start according to the inverter manufacturer's instructions.



Very important!

For the connection of the devices of the respective manufacturer, please observe the manufacturer's documentation in the respective valid version.

40.2 Ginlong Solis-5G

Termination	Adressing	Interface
Yes	Yes	RS485

Select „Ginlong: 5G“ during device detection.

Supported models:

- 1P7K-5G, 1P8K-5G, 25K-5G, 30K-5G, 33K-5G, 36K-5G, 40K-5G, 36K-HV-5G, 40K-HV-5G, 50K-HV-5G, 15K-LV-5G, 20K-LV-5G, 50K-LV-5G, 60K-LV-5G, 75K-5G, 80K-5G, 80K-HV-5G, 90K-HV-5G, 100K-HV-5G, 110K-BHV-5G, 50K-5G, 50K-HV-5G, 60K-5G, 60K-HV-5G, 70K-5G, 70K-HV-5G, 75K-5G, 80K-5G-PRO, 90K-5G, 100K-5G, 100K-5G-PRO, 125K-HV-5G, 125K-BHV-5G, 110K-5G, 136K-BHV-5G, 110K-5G, 124K-HV-5G

Overview:

- Interface integrated.
- Where to connect: Terminal block in the inverter.
- 2-pin wiring.
- Communication address must be assigned for multiple inverters (by default, the address is set to 01).
- Installation steps:
  - Switch off the inverters and Solar-Log™.
  - Connect inverters to the Solar-Log™.
  - Connect the inverters to each other.
  - Allocate communication address.

Connect the inverter to the Solar-Log™.

The wiring is done using a

- self-made, shielded data cable.

Procedure:

1. If you are making the cable yourself, connect the wires as shown in the following diagram:

Solar-Log™ Base RS485 (A) / (B)	Inverter terminal block
PIN	PIN
► (A) 6 or (B) 10 (Data+)	► 1 RS485A1 IN +
► (A) 9 or (B) 13 (Data-)	► 2 RS485B1 IN -

2. If no other inverter is connected, terminate the inverter according to the inverter manual.

Connect the inverters to each other

- Wiring according to inverter instructions.
- Where to connect: Terminal block in the inverter.

Procedure:

1. Connect first inverter via RS485 terminal block OUT to second inverter RS485 terminal block IN.
2. Connect the other inverters to each other in the same way.
3. Terminate the last inverter according to the inverter manufacturer‘s instructions.

Note

If communication problems occur (e.g., no or faulty device recognition), it may help to remove the termination (bridge or resistor) on the last device and test whether communication then works.
Important: Always follow the manufacturer's instructions, as implementation may vary depending on the device. If you are unsure, we recommend consulting the manual or contacting the manufacturer's technical support.

Assign the communication address

- Recommendation: Continuous numbering starting with 1.
- Default settings on the inverter: Communication address 1.
- Setting: Using the inverter's display.
- Procedure: Start according to the inverter manufacturer's instructions.

Terminal block exemplary for the following models:

- Solis-15K-LV-5G, Solis-20K-LV-5G, Solis-23K-LV-5G, Solis-25K-5G, Solis-25K-LV-5G, Solis-25K-US, Solis-30K-5G, Solis-30K-US, Solis-30K-5G-AU, Solis-30K-LV-5G, Solis-33K-5G, Solis-36K-5G, Solis-36K-US, Solis-36K-HV-5G, Solis-36K-LV-5G, Solis-40K-5G, Solis-40K-HV-5G, Solis-40K-US, Solis-40K-US-F, Solis-50K-HV-5G, Solis-50K-US, Solis-50K-US-F, Solis-60K-US-F, Solis-60K-HV-5G, Solis-60K-LV-5G, Solis-66K-US-F, Solis-70K-HV-5G

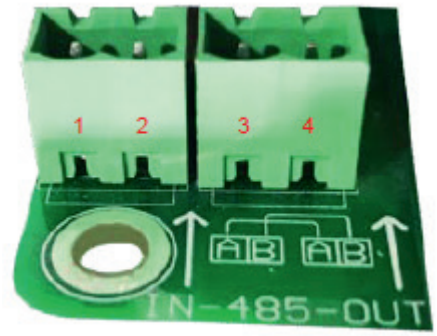

Fig.: Terminal block in the inverter (Source: Ginlong)

Supported models:

- 1P6K-4G-US,1P7.6K-4G-US, 1P8.6K-4G-US
- 3P5K-4G-AU-MX, 3P8K-4G-AU-MX
- 23K-LV-5G, 25K-5G, 25K-LV-5G, 30K-5G, 30K-5G-AU, 30K-LV-5G, 33K-5G, 36K-LV-5G, 50K-LV-5G, 50K-LV-5G+, 50K-LV-5G-Pro, 60K-5G-Pro, 60K-LV-5G, 60K-LV-5G+, 60K-LV-5G-Pro, 75K-5G, 75K-5G+, 75K-5G-Pro, 75K-HV-5G+, 75K-LV-5G-Pro, 80K-5G, 80K-5G+, 80K-5G-Pro, 80K-HV-5G, 80K-HV-5G+, 90K-5G, 90K-HV-5G, 90K-HV-5G+, 100K-5G, 100K-5G+, 100K-5G-Pro, 100K-HV-5G+, 104K-EHV-5G, 110K-5G, 110K-5G+, 110K-5G-Pro, 110K-BHV-5G, 110K-BHV-5G+, 125K-5G-Pro,125K-HV-5G, 125K-HV-5G+, 125K-HV-5G-Pro, 125K-BHV-5G, 125K-BHV-5G+, 125K-BHV-5G-Pro, 125K-BNV-5G+, 125K-EHV-5G, 125K-EHV-5G+, 125K-EHV-5G-US+ Derate, 125K-EHV-5G-US+ IN, 125K-EHV-5G-US+ ON, 136K-BHV-5G, 136K-BHV-5G+, 136K-BHV-5G-Pro, 150K-BHV-5G-Pro,185K-EHV-5G, 185K-EHV-5G+, 185K-EHV-5G-US-ON, 185K-EHV-5G-US+ ON, 196K-EHV-5G+, 215K-EHV-5G+, 215K-EHV-5G+ ON, 230K-EHV-5G, 230K-EHV-5G+, 250K-EHV-5G, 250K-EHV-5G+, 255K-EHV-5G, 255K-EHV-5G+

- GCI-196K-EHV-5G+, GCI-215K-EHV-5G+, GCI-230K-EHV-5G, GCI-230K-EHV-5G+
- S5-GC15K-LV, S5-GC20K-LV, S5-GC23K-LV, S5-GC25K, S5-GC25K-HV, S5-GC25K-LV, S5-GC30K, S5-GC30K-LV, S5-GC33K, S5-GC36K, S5-GC36K-AU, S5-GC36K-LV, S5-GC40K, S5-GC40K-AU, S5-GC40K-HV, S5-GC40K-HV-AU, S5-GC50K, S5-GC36K-LV, S5-GC50K, S5-GC50K-HV, S5-GC50K-HV-AU, S5-GC50K-IN, S5-GC60K, S5-GC60K-HV, S5-GC60K-IN, S5-GC70K-HV, S5-GC124K-HV
- S5-GR1P0.7K-1, S5-GR1P1K-M, S5-GR1P1.5K-M, S5-GR1P2K-M, S5-GR1P2.5K, S5-GR1P2.5K-M, S5-GR1P3K, S5-GR1P3K-M, S5-GR1P3.6K, S5-GR1P3.6K-M, S5-GR1P4K, S5-GR1P4.6K, S5-GR1P6K, S5-GR1P7K, S5-GR1P7K2, S5-GR1P7.6K, S5-GR1P8.6K, S5-GR1P8K, S5-GR1P8K2, S5-GR1P9K, S5-GR1P10K
- S5-GR3P3K, S5-GR3P4K, S5-GR3P5K, S5-GR3P5K-HV, S5-GR3P5K-LV, S5-GR3P6K, S5-GR3P6K-HV, S5-GR3P6K-LV, S5-GR3P8K, S5-GR3P8K-HV, S5-GR3P9K, S5-GR3P9K-HV, S5-GR3P10K, S5-GR3P10K-HV, S5-GR3P10K-LV, S5-GR3P12K, S5-GR3P12K-HV, S5-GR3P13K, S5-GR3P13K, S5-GR3P15K, S5-GR3P15K, S5-GR3P15K-HV, S5-GR3P17K, S5-GR3P17K-HV, S5-GR3P20K, S5-GR3P20K-HV, S5-GR3P23K, S5-GR3P25K
- S6-GC50K-LV, S6-GC60K-LV, S6-GC75K, S6-GC75K-LV, S6-GC80K, S6-GC100K, S6-GC110K, S6-GC110K-BHV, S6-GC125K, S6-GC125K-HV, S6-GC136K-BHV, S6-GC150K, S6-GC150K-BHV, S6-GC200K-HV
- S6-GR1P0.7K-M, S6-GR1P1K-M, S6-GR1P1.5K-M, S6-GR1P2K-M, S6-GR1P2.5K, S6-GR1P2.5K-LV, S6-GR1P2.5K-M, S6-GR1P3K, S6-GR1P3K-LV, S6-GR1P3K-M, S6-GR1P3.6K, S6-GR1P3.6K-M, S6-GR1P3.8K-LV, S6-GR1P4K, S6-GR1P4.6K, S6-GR1P5K, S6-GR1P6K, S6-GR1P7K-M-LV
- S6-GU250K-EHV(-US) M12 IN, S6-GU250K-EHV M12 ON, S6-GU300K-EHV(-US) M12 IN, S6-GU300K-EHV(-US) M12 ON, S6-GU320K-EHV, S6-GU333K-EHV M12 IN, S6-GU333K-EHV M12 ON, S6-GU350K-EHV, S6-GU350K-EHV M12 ON

Very important!

For the connection of the devices of the respective manufacturer, please observe the manufacturer's documentation in the respective valid version.

41 GMDE

41.1 GMDE

Termination	Addressing	Interface
Yes	No	RS485

Select „GMDE“ during device detection.

Supported models:

- SolDate 306KTL, SolDate 312KTL, SolDate 315KTL, SolDate 318KTL

Overview

- Integrated RS485 interface.
- 2-pin cable for the RS485 connection of the Solar-Log™.
- Communication address does not have to be assigned.
- Installation steps:
  - Switch off the inverters and Solar-Log™.
  - Connect inverters to the Solar-Log™.
  - Connect the inverters to each other.

Connect inverters to the Solar-Log™

The wiring is done using a

- self-made data cable with RJ45 plug.



Caution

Risk of damage to the unit!
The Solar-Log™ also has an RJ45 socket, which must never be connected to the RJ45 socket on the inverter.

► Only connect inverters via the RS485/422 Solar-Log™ interface(s).

Procedure

1. Connect wires as shown in the diagram:

Solar-Log™ Base RS485 (A) / (B)	RJ45 inverter
Terminal	PIN
► (A) 6 or (B) 10 (Data+)	► 3 A
► (A) 9 or (B) 13 (Data-)	► 6 B

2. Run the wire from the Solar-Log™ to inverter 1 through the hole for the wire on the bottom of the unit.
3. In the inverter insert the RJ45 plug into the "RS-485 out" socket.

Connect the inverters to each other

- Connect using a network cable (patch cable).
- Where to connect: RJ45 socket on the outside of the inverter.

Procedure

1. Insert the RJ45 plug in inverter 1 into the RJ45 socket.
2. Insert the other end of the wire into the other RJ45 socket on inverter 2.
3. Connect the other inverters to each other in the same way.
4. Terminate the last inverter according to the inverter instructions.

42 GoodWe

42.1 GoodWe (RS422)

Termination	Addressing	Interface
Yes	Yes	RS422

Select „GoodWe: RS422“ during device detection.

Supported models:

- GW06K-DT, GW08K-DT, GW09K-DT, GW10K-DT, GW12K-DT, GW15K-DT, GW17K-DT, GW20K-DT, GW25K-DT, GW25K-MT, GW30K-DT, GW30K-MT, GW36K-MT, GW50K-MT, GW60K-MT, GW75KHV-MT, GW1000-NS, GW1500-NS, GW1500-SS, GW2000-NS, GW2000-SS, GW2500-NS, GW3000-DI, GW3000D-DI, GW3000-NS, GW3000D-NS, GW3000N-DS, GW3000-SS, GW3600-DI, GW3600D-DI, GW3600D-DK, GW3600D-UK, GW3600S-UK, GW3600-DS, GW3600-NS, GW3600D-NS, GW3600D-JP, GW3600N-DS, GW3600S-DK, GW3600-SS, GW3600N-SS, GW4000D-JP, GW4000-SS, GW4200-DI, GW4200D-DI, GW4200-DS, GW4200-NS, GW4200D-NS, GW4200N-DS, GW4200N-SS, GW4600-DS, GW4600D-JP, GW4600-SS, GW5000D-NS, GW5000-NS, GW5000N-DS, GW5000N-SS, GW4000-DT, GW5000-DT, GW6000-DT

Overview

- Integrated RS422 interface.
- 6-pin cable – only at the RS422 interface.
- Communication address does not have to be assigned.
- Installation steps:
  - Switch off the inverters and Solar-Log™.
  - Connect inverters to the Solar-Log™.
  - Connect the inverters to each other.

Connect inverters to the Solar-Log™

The wiring is done using a

- self-made data cable with RJ45 plug.



Caution

Risk of damage to the unit!
The Solar-Log™ also has an RJ45 socket, which must never be connected to the RJ45 socket on the inverter.

► Only connect inverters via the RS422 interface(s).

Procedure

1. Connect wires as shown in the diagram:

Solar-Log™ Base RS422	RJ45 inverter
Terminal	PIN
► 6 (T/RX+)	► 6 Data+ (RX_RS485A)
► 8 GND	► 4 GND
► 8 GND	► 5 GND
► 9 (T/RX-)	► 3 Data- (RX_RS485B)
► 10 (R/TX+)	► 8 Data+ (TX_RS485A)
► 13 (R/TX-)	► 7 Data- (TX_RS485B)

2. Run the wire from the Solar-Log™ to inverter 1 through the hole for the wire on the bottom of the unit.
3. In the inverter insert the RJ45 plug into the „RS-485 out“ socket.

Connect the inverters to each other

- Connect using a network cable (patch cable).
- Where to connect: RJ45 socket on the outside of the inverter.

Procedure

1. Insert the RJ45 plug in inverter 1 into the RJ45 socket.
2. Insert the other end of the wire into the other RJ45 socket on inverter 2.
3. Connect the other inverters to each other in the same way.
4. Terminate the last inverter according to the inverter instructions.

Procedure for the following models:

- GW3600S-DK, GW3600D-DK

1. Connect wires as shown in the diagram:

Solar-Log™ Base RS422	RJ45 inverter
Terminal	PIN
► 6 (T/RX+)	► 3 +
► 9 (T/RX-)	► 6 -
► 10 (R/TX+)	► 1+
► 13 (R/TX-)	► 2 -

42.2 GoodWe (RS485)

Termination	Addressing	Interface
Yes	-*	RS485

Select „GoodWe: RS485“ during device detection.

Supported models:

- GW06K-DT, GW08K-DT, GW09K-DT, GW10K-DT, GW10K-SDT-20, GW12K-DT, GW12K-SDT-20, GW15K-DT, GW15K-SDT-20, GW17K-DT, GW17K-SDT-20, GW20K-DT, GW20K-SDT-20, GW25K-DT, GW30K-DT, GW1000-NS, GW1500-NS, GW1500-SS, GW2000-NS, GW2000-SS, GW2500-NS, GW3000-DI, GW3000D-DI, GW3000D-NS, GW3000N-DS, GW3000-NS, GW3000-SS, GW3600-DI, GW3600-DS, GW3600D-DI, GW3600D-DK, GW3600-NS, GW3600D-NS, GW3600N-DS, GW3600D-JP, GW3600D-UK, GW3600S-DK, GW3600S-UK, GW3600-SS, GW3600N-SS, GW4000D-JP, GW4000-DT, GW4000-SS, GW4200-DI, GW4200D-DI, GW4000-SDT-20, GW4200-DS, GW4200-NS, GW4200D-NS, GW4200N-DS, GW4200N-SS, GW4600D-JP, GW4600-DS, GW4600-SS, GW5000-DT, GW5000-NS, GW5000D-NS, GW5000N-DS, GW5000N-SS, GW5000-SDT-20, GW6000-DT, GW6000-SDT-20, GW8000-SDT-20

Overview

- Interface integrated.
- Wiring to the RS485 interface of the Solar-Log™.
- Depending on the model, 2-pin or 3-pin wiring.
- *Communication address: Please refer to the manufacturer‘s manual.
- Installation steps:
  - Switch off the inverters and the Solar-Log™.
  - Connect the inverters to the Solar-Log™.
  - Connect the inverters to each other.

Wiring the inverter to the Solar-Log™ (see tables below)

The wiring is done using a

- self-made, shielded data cable.

Procedure for the following models:

- GW1000-NS, GW1500-NS, GW2000-NS, GW2500-NS, GW3000-DI, GW3000D-DI, GW3000D-NS, GW3000N-DS, GW3000-NS, GW3600-DI, GW3600D-DI, GW3600-NS, GW3600D-NS, GW3600N-DS, GW3600D-JP, GW4000D-JP, GW4200-DI, GW4200D-DI, GW4200-NS, GW4200D-NS, GW4200N-DS, GW4600D-JP, GW5000-NS, GW5000D-NS, GW5000N-DS

1. Connect wires as shown in the diagram:

Solar-Log™ Base RS485 (A) / (B)	Terminal strip in the inverter
Terminal	Terminal
► (A) 6 or (B) 10 (Data+)	► 1 RS485 +
► (A) 9 or (B) 13 (Data-)	► 2 RS485 -
or	
► (A) 6 or (B) 10 (Data+)	► 5 RS485 +
► (A) 9 or (B) 13 (Data-)	► 6 RS485 -

2. Pass the cable from Solar-Log™ to inverter 1 through the cable gland on the underside of the device and connect it with terminal strip plug.
3. Terminate the last inverter according to the inverter instructions.

Connect the inverters to each other.

- Wiring via 3-pin shielded cable.
- Connection location: RS485 Interface in the inverter.
- Please refer to the manufacturer's manual.

Procedure for the following models:

- GW09K-DT, GW10K-DT, GW12K-DT, GW15K-DT, GW17K-DT, GW20K-DT, GW25K-DT, GW30K-DT, GW4000-DT, GW5000-DT, GW6000-DT

1. Connect wires as shown in the diagram:

Solar-Log™ Base RS485 (A) / (B)	Connection in the inverter RS485 (Out)
Terminal	Terminal
► (A) 6 or (B) 10 (Data+)	► 5 RS485 +
► (A) 9 or (B) 13 (Data-)	► 6 RS485 -

2. Pass the cable from Solar-Log™ to inverter 1 through the cable gland on the underside of the device and connect it with terminal strip plug.
3. Terminate the last inverter according to the inverter instructions.

Connect the inverters to each other.

- Wiring via 3-pin shielded cable.
- Connection location: RS485 Interface in the inverter.
- Please refer to the manufacturer's manual.

Procedure for the following models:

- GW06K-DT, GW08K-DT, GW10K-SDT-20, GW12K-SDT-20, GW15K-SDT-20, GW17K-SDT-20, GW20K-SDT-20 GW4000-SDT-20, GW5000-SDT-20, GW6000-SDT-20, GW8000-SDT-20

1. Connect wires as shown in the diagram:

Solar-Log™ Base RS485 (A) / (B)	Connection in the inverter
Terminal	PIN
► (A) 6 or (B) 10 (Data+)	► 3 RS485 A+
► (A) 9 or (B) 13 (Data-)	► 1 RS485 B-

2. Pass the cable from Solar-Log™ to inverter 1 through the cable gland on the underside of the device and connect it with terminal strip plug.
3. Terminate the last inverter according to the inverter instructions.

Procedure for the following models:

- GW3600S-UK, GW3600D-UK

1. Connect wires as shown in the diagram:

Solar-Log™ Base RS485 (A) / (B)	Terminal strip in the inverter
Terminal	Terminal
► (A) 6 or (B) 10 (Data+)	► 1 485_TX+
► (A) 8 or (B) 12 GND	► 3 PE (Earth)
► (A) 9 or (B) 13 (Data-)	► 2 485_TX-
or	
► (A) 6 or (B) 10 (Data+)	► 5 485_TX+
► (A) 8 or (B) 12 GND	► 4 PE (Earth)
► (A) 9 or (B) 13 (Data-)	► 6 485_TX-

2. Pass the cable from Solar-Log™ to inverter 1 through the cable gland on the underside of the device and connect it with terminal strip plug.
3. Terminate the last inverter according to the inverter instructions.

Connect the inverters to each other.

- Wiring via 3-pin shielded cable.
- Connection location: RS485 Interface in the inverter.
- Please refer to the manufacturer's manual.

Procedure for the following models:

- GW1500-SS, GW2000-SS, GW3000-SS, GW3600D-DK, GW3600-DS, GW3600S-DK, GW3600-SS, GW3600N-SS, GW4000-SS, GW4200-DS, GW4200N-SS, GW4600-DS, GW4600-SS, GW5000N-SS

1. Connect wires as shown in the diagram:

Solar-Log™ Base RS485 (A) / (B)	Connection in the inverter
Terminal	PIN
► (A) 6 or (B) 10 (Data+)	► 8 TX_RS485 A (+) or 6 RX_RS485 A (+)
► (A) 8 or (B) 12 GND	► 4 GND or 5 GND
► (A) 9 or (B) 13 (Data-)	► 7 TX_RS485 B (-) or 3 RX_RS485 B (-)

2. Pass the cable from Solar-Log™ to inverter 1 through the cable gland on the underside of the device and connect it with terminal strip plug.
3. Terminate the last inverter according to the inverter instructions.

Very Important!

Please refer to the manufacturer's documentation in the current version when connecting the devices of the respective manufacturer.

42.3 GoodWe HT series

Termination	Addressing	Interface
Yes	-*	RS485

Select „GoodWe: HT series“ during device detection.

Supported models:

- GW73KLV-HT, GW75K-HT, GW80K-HT, GW100K-HT, GW110K-HT, GW120K-HT, GW136K-HTH, GW150K-HTH, GW225K-HT, GW225KN-HT, GW250K-HT, GW250KN-HT

Overview

- Interface integrated.
- Connection location: RS485-COM2 interface, at the bottom of the inverter.
- 3-pin wiring.
- *Communication address: Please refer to the manufacturer‘s manual.
- Installation steps:
  - Switch off the inverters and the Solar-Log™.
  - Connect the inverters to the Solar-Log™.
  - Connect the inverters to each other.

Procedure:

1. Connect wires as shown in the diagram:

Solar-Log™ Base RS485 (A) / (B)	Inverter COM2 port
Terminal	Terminal
► (A) 6 or (B) 10 (Data+)	► 1 485_A1 or 3 485_A2 (A)
► (A) 8 or (B) 12 GND	► 5 PE or 6 PE
► (A) 9 or (B) 13 (Data-)	► 2 485_B1 or 4 485_B2 (B)

2. Pass the cable from Solar-Log™ to inverter 1 through the cable gland on the underside of the device and connect it with terminal strip plug.
3. Terminate the last inverter according to the inverter instructions.

Connect the inverters to each other.

- Wiring via 3-pin shielded cable.
- Connection location: RS485-COM2 interface, at the bottom of the inverter.
- Please refer to the manufacturer‘s manual.

Very Important!

Please refer to the manufacturer‘s documentation in the current version when connecting the devices of the respective manufacturer.

42.4 GoodWe MT/SMT series

Termination	Addressing	Interface
Yes	-*	RS485

Select „GoodWe: RS485“ during device detection.

Important!

Due to a problem with the reactive power setting for the SMT devices, the MT and SMT series must not be connected to the same bus if reactive power control is used.

Supported models:

- GW25K-MT, GW29.9K-MT, GW30K-MT, GW36K-MT, GW50KBF-MT, GW50KN-MT, GW50KS-MT, GW60KBF-MT, GW60KN-MT, GW60KS-MT, GW70KHV-MT, GW75K-MT, GW75KBF-MT, GW80K-MT, GW80KBF-MT, GW80K-HV-MT

Overview

- Interface integrated.
- Wiring to the RS485 interface of the Solar-Log™.
- Depending on the model, 2-pin or 3-pin wiring.
- *Communication address: Please refer to the manufacturer‘s manual.
- Installation steps:
  - Switch off the inverters and the Solar-Log™.
  - Connect the inverters to the Solar-Log™.
  - Connect the inverters to each other.

Wiring the inverter to the Solar-Log™ (see tables below)

The wiring is done using a

- self-made, shielded data cable.

Procedure for the following models:

- GW50KN-MT, GW60KN-MT, GW50KBF-MT, GW60KBF-MT, GW70KHV-MT, GW75KBF-MT, GW75K-MT, GW80KBF-MT, GW80KHV-MT, GW80K-MT

1. Connect wires as shown in the diagram:

Solar-Log™ Base RS485 (A) / (B)	Connection plug in the inverter
Terminal	PIN
► (A) 6 or (B) 10 (Data+)	► 1 RS485 +
► (A) 9 or (B) 13 (Data-)	► 2 RS485 -
or	
► (A) 6 or (B) 10 (Data+)	► 5 RS485 +
► (A) 9 or (B) 13 (Data-)	► 6 RS485 -

2. Pass the cable from Solar-Log™ to inverter 1 through the cable gland on the underside of the device and connect it with terminal strip plug.
3. Terminate the last inverter according to the inverter instructions.

Procedure for the following models:

- GW25K-MT, GW29.9K-MT, GW30K-MT, GW36K-MT, GW50KS-MT, GW60KS-MT

1. Connect wires as shown in the diagram:

Solar-Log™ Base RS485 (A) / (B)	Connection in the inverter
Terminal	PIN
► (A) 6 or (B) 10 (Data+)	► 1 RS485_A1 (+) or 3 RS485_A1 (+)
► (A) 8 or (B) 12 GND	► 5 GND
► (A) 9 or (B) 13 (Data-)	► 2 RS485_B1 (-) or 4 RS485_B1 (-)

2. Pass the cable from Solar-Log™ to inverter 1 through the cable gland on the underside of the device and connect it with terminal strip plug.
3. Terminate the last inverter according to the inverter instructions.

Connect the inverters to each other.

- Wiring via 3-pin or 2-pin shielded cable (depending on model).
- Connection location depending on model:
  Connection plug in the inverter.
  RS485-COM interface at the bottom of the inverter.
- Please refer to the manufacturer's manual.

Very Important!

Please refer to the manufacturer's documentation in the current version when connecting the devices of the respective manufacturer.

43 Growatt

43.1 Growatt

Termination	Addressing	Interface
-	Yes	RS485

Select „Growatt: Mod“ during device detection.

Note!

Growatt has two different wiring systems in their program. The differences are in the pin wiring. The old inverters have a round plug and 2-pin wiring, and new inverters have 3-pin wiring and a terminal block connector in the inverter.

3-pin wiring

Overview

- Integrated interface.
- Where to connect: inside the inverter.
- 3-pin wiring.
- The communication address has to be assigned.
- Installation steps:
  - Switch off the inverters and the Solar-Log™.
  - Connect the inverters to the Solar-Log™.
  - Connect the inverters to each other.
  - Assign the communication address.

Connect the inverters to the Solar-Log™

The wiring is done

- using a self-made shielded 2-wire data cable.

Procedure

1. If you are making the cable yourself, connect the wires as shown in the following diagram:

Solar-Log™ Base RS485 (A) / (B)	Inverter terminal strip
Terminal	Pin
► (A) 6 or (B) 10 (Data+)	► 3 (+)
► (A) 9 or (B) 13 (Data-)	► 1 (-)

2. Connect the cable‘s shielding with pin 2 of the inverter.
3. Insert the terminal block connector into the inverter‘s RS485 socket.

Note!

The shielding on the inverter side has to be applied according to the manufacturer's connection diagram.
Explanation:

► Connecting the shielding to the ground prevents interference of any kind. However, the shielding may only be connected to the ground on one side of the data bus!

Connect the inverters together

- Wiring using a 3-pin cable with a terminal block connector.
- Where to connect: RS485 socket in the inverter.

Procedure:

1. Insert the terminal block connector into the first inverter's RS485 socket.
2. Insert the other terminal block connector into the second inverter's RS485 socket
3. Connect the other inverters to each other in the same way.

Assign the communication address

- Recommendation: Continuous numbering starting with 1.
- Address range: 1 - 125.
- Setting: Using the inverter's display.
- Procedure: Start according to the inverter's instructions.

2-pin wiring

Overview

- Integrated interface
- Where to connect: Round sockets on the outside of the inverter
- 2-pin wiring
- Communication address must be allocated
- Installation steps
  - Switch off the inverters and Solar-Log™
  - Connect inverters to the Solar-Log™
  - Connect the inverters to each other
  - Allocate communication address

Connect inverters to the Solar-Log™

The wiring is done using a

- self-made, shielded 2 wire data cable with round plug and terminal block connector.
- The round plugs required can be obtained from the inverter manufacturer.

Procedure

1. If you are making the cable yourself, connect the wires as shown in the following diagram:

Solar-Log™ Base RS485 (A) / (B)	Inverter round socket
Terminal	PIN
► (A) 6 or (B) 10 (Data+)	► 2 (+)
► (A) 9 or (B) 13 (Data-)	► 1 (-)

2. Insert the round plug into any COM round socket on the inverter.

Connect the inverters to each other

- Wiring using 2 pin cable with round plugs.
- Where to connect: Round sockets on the outside of the inverter.

Procedure

1. Insert the round plug into any round socket on inverter 1.
2. Insert the other end of the cable into any round socket on inverter 2.
3. Connect the other inverters to each other in the same way.

Allocate communication address

- Recommendation: Continuous numbering starting with 1.
- Address range: 1 - 125
- Setting: Using the inverter display
- Procedure: Start according to the inverter's instructions



Note

When detecting inverters, there are two options for for Growatt in the initial configuration. "Growatt old" and "Growatt Mod". For newer models and modules with the latest firmware version version, please select "Growatt Mod", for models with older firmware versions select "Growatt old".

Inverters	Firmware version
Sungold 1500TL/2000TL/3000TL/5000TL	>= G.2.1 Modbus
Growatt 1500TL/2000TL/3000TL/4000TL/4400TL/5000TL	>= G.2.1 Modbus
Growatt 2500MTL/3000MTL	Modbus
Growatt 3600MTL/4200MTL/5000MTL	>= S.2.1 Modbus
Growatt 3600MTL-10/4200MTL-10/5000MTL-10	Modbus
Growatt 2000HF/2500HF/3000HF	Modbus
Growatt 10000UE/12000UE/18000UE/20000UE	Modbus
Growatt 4000UE/5000UE/6000UE	Modbus
Growatt 1500TL-US/2000TL-US/3000TL-US	>= U.1.5 Modbus
Growatt 3600MTL-US/4200MTL-US/5000MTL-US	>= U.1.5 Modbus
Growatt 2000HF-US/2500HF-US/3000HF-US	Modbus
Growatt 8000TL-US/9000TL-US/10000TL-US/11000TL-US	Modbus
Growatt 10000TL3-US/12000TL3-US/18000TL3-US/20000TL3-US	Modbus

Supported models:

- GW1000, GW1000-S, GW1000TL, GW1500, GW1500-S, GW1500TL, GW1500-US, GW1500MTL-US, GW2000, GW2000HF, GW2000HF-US, GW2000MTL-US, GW2000-S, GW2000TL, GW2000-US, GW2500HF, GW2500HF-US, GW2500MTL, GW2500MTL-10, GW3000, GW3000HF, GW3000HF-US, GW3000MTL, GW3000MTL-10, GW3000MTL-S, GW3000MTL-US, GW3000-S, GW3000TL, GW3000-US, GW3600MTL, GW3600MTL-10, GW3600MTL-S, GW3600MTL-US, GW4000, GW4000MTLP-US, GW4000TL, GW4000UE, GW4200MTL, GW4200MTL-10, GW4200MTL-S, GW4200MTL-US, GW4400, GW4400TL, GW5000, GW5000MTL, GW5000MTL-10, GW5000MTL-S, GW5000UE, GW5000MTL-US, GW5000MTLP-US, GW5000TL, GW5500MTL-10, GW5500MTL-S, GW6000MTL-10, GW6000UE, GW6000MTLP-US, GW6600MTL-10, GW7000UE, GW8000UE, GW8000TL-US, GW9000UE, GW9000TL-US, GW10000TL-JP, GW10000UE, GW10000TL-US, GW11000TL-US, GW12000UE, GW12400TL-JP, GW12500TL-JP, GW18000TL3-HE, GW18000UE, GW20000TL3-HE, GW20000UE, GW30000TL3, GW30000TL3-S, GW30000TL3-US, GW33000TL3, GW33000TL3-S, GW33000TL3-US, GW40000TL3, GW40000TL3-S, GW50000TL3, GW50000TL3-S, GW50000TL3-HE, GW60000TL3-HE, GW-Sungold 1000, GW-Sungold 1500, GW-Sungold 1500TL, GW-Sungold 2000, GW-Sungold 2000TL, GW-Sungold 3000, GW-Sungold 3000TL, GW-Sungold 5000, GW-Sungold 5000S, GW-Sungold 5000TL

Pin assignment for the following models:

- GW10000TL3-US, GW12000TL3-US, GW18000TL3-US, GW20000TL3-US

Solar-Log™ Base RS485 (A) / (B)	RJ45 plug Inverter
Terminal	Pin
► (A) 6 or (B) 10 (Data+)	► 4 T/R (+)
► (A) 9 or (B) 13 (Data-)	► 5 T/R (-)

Very important!

For the connection of the devices of the respective manufacturer, please observe the manufacturer's documentation in the respective valid version.

43.2 Growatt - X Generation

Termination	Addressing	Interface
-	Yes	RS485

Select „Growatt: X Generation“ during device detection.

Supported models:

- MAX:
  - MAX 50KTL3 LV, MAX 60KTL3 LV, MAX 70KTL3 LV, MAX 80KTL3 LV, MAX 60KTL3 MV, MAX 70KTL3 MV, MAX 80KTL3 MV, MAX 90KTL3 MV, MAX 100KTL3 MV
- MAC:
  - MAC 30KTL3-X LV, MAC 40KTL3-X LV, MAC 50KTL3-X LV, MAC 60KTL3-X LV, MAC 50KTL3-X MV, MAC 60KTL3-X MV, MAC 66KTL3-X MV, MAC 70KTL3-X MV
- MID:
  - MID 15KTL3-X, MID 17KTL3-X, MID 20KTL3-X, 25KTL3-X, MID 30KTL3-X2, MID 33KTL3-X2, MID 36KTL3-X2, MID 40KTL3-X2, MID 50KTL3-X2
- MOD:
  - MOD 3000TL3-X, MOD 4000TL3-X, MOD 5000TL3-X, MOD 6000TL3-X, MOD 7000TL3-X, MOD 8000TL3-X, MOD 9000TL3-X, MOD 10KTL3-X, MOD 11KTL3-X, MOD 12KTL3-X, MOD 13KTL3-X, MOD 15KTL3-X

Overview

- Integrated interface.
- Where to connect: inside the inverter.
- 3-pin wiring.
- The communication address has to be assigned.
- Installation steps:
  - Switch off the inverters and the Solar-Log™.
  - Connect the inverters to the Solar-Log™.
  - Connect the inverters to each other.
  - Assign the communication address.

Connect the inverters to the Solar-Log™

The wiring is done

- using a self-made shielded 3-wire data cable.

Procedure (Version RJ45 socket):

1. Open the inverter as shown in the inverter‘s instructions.
2. If you make up the cable yourself, connect the wires to the RS485 terminal block according to the table below (see also figures below).
3. Address the inverter according to the manufacturer‘s specifications.
   Address range 1 to 254.
4. If no further inverter is connected, terminate the inverter according to the instructions for the inverter.
5. Close the inverter if no other inverters are to be connected.

Wiring for the models:

- MAX:
  - MAX 50KTL3 LV, MAX 60KTL3 LV, MAX 70KTL3 LV, MAX 80KTL3 LV, MAX 60KTL3 MV, MAX 70KTL3 MV, MAX 80KTL3 MV, MAX 90KTL3 MV, MAX 100KTL3 MV

Solar-Log™ Base RS485 (A) / (B)	RS485 Terminal block of the inverter
Terminal	Pin
► (A) 6 or (B) 10 (Data+)	► RS485 A (Port 1) or RS485 A (Port 2)
► (A) 8 or (B) 12 GND	► GND (Port 1) or GND (Port 2)
► (A) 9 or (B) 13 (Data-)	► RS485 B (Port 1) or RS485 (Port 2)

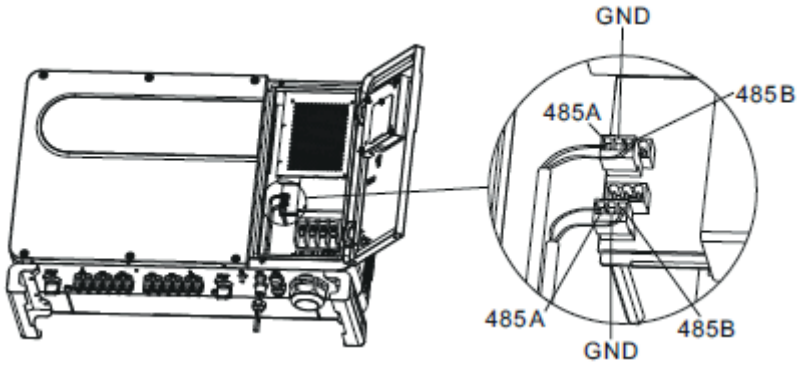

Fig.: Terminal block in the inverter (Source: Growatt)

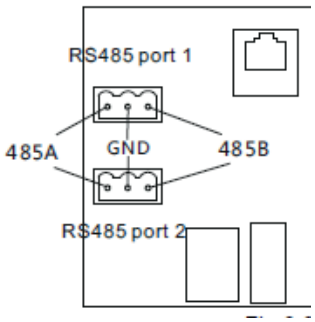

Fig.: Terminal block Port 1 and Port 2 (Source: Growatt)

Connect the inverters to each other

- Connect using a 3 wire, shielded data cable.
- Where to connect: Terminal strip inside the inverter.
- Wire the inverters according to the inverter manual.

Note

Check inverter for baud rate. The baud rate must be set to 9600. Set the baud rate according to the inverter instructions.

Note

A maximum of 32 inverters per RS485 bus can be connected.
The maximum bus length is 500m.

Wiring for the models:

- MAC:
  - MAC 30KTL3-X LV, MAC 40KTL3-X LV, MAC 50KTL3-X LV, MAC 60KTL3-X LV, MAC 50KTL3-X MV, MAC 60KTL3-X MV, MAC 66KTL3-X MV, MAC 70KTL3-X MV

Solar-Log™ terminal strip connector	Solar-Log™ Base RS485 (A) / (B)	RS485 Terminal block of the inverter
Terminal		Pin
► 1 (Data+)	► (A) 6 or (B) 10 (Data+)	► 6 RS485 A or 9 RS485 A
► 3 (GND)	► (A) 8 or (B) 12 GND	► 5 GND or 8 GND
► 4 (Data-)	► (A) 9 or (B) 13 (Data-)	► 4 RS485 B or 7 RS485

Connect the inverters to each other

- Connect using a 3 wire, shielded data cable.
- Where to connect: Terminal strip inside the inverter.
- Wire the inverters according to the inverter manual.

Wiring for the models:

- MID:
  - MID 15KTL3-X, MID 17KTL3-X, MID 20KTL3-X, 25KTL3-X, MID 30KTL3-X2, MID 33KTL3-X2, MID 36KTL3-X2, MID 40KTL3-X2, MID 50KTL3-X2
- MOD:
  - MOD 3000TL3-X, MOD 4000TL3-X, MOD 5000TL3-X, MOD 6000TL3-X, MOD 7000TL3-X, MOD 8000TL3-X,MOD 9000TL3-X, MOD 10KTL3-X, MOD 11KTL3-X, MOD 12KTL3-X, MOD 13KTL3-X, MOD 15KTL3-X

Solar-Log™ terminal strip connector	Solar-Log™ Base RS485 (A) / (B)	RS485 Terminal block of the inverter
Terminal		Pin
► 1 (Data+)	► (A) 6 or (B) 10 (Data+)	► 3 RS485 A1
► 4 (Data-)	► (A) 9 or (B) 13 (Data-)	► 4 RS485 B1

Connect the inverters to each other

- Connect using a 2 wire, shielded data cable.
- Where to connect: COM connector plug on the inverter.
- Wire the inverters according to the inverter manual.

Very important!

For the connection of the devices of the respective manufacturer, please observe the manufacturer's documentation in the respective valid version.

44 GTec

44.1 GTec

Termination	Addressing	Interface
Yes	No	RS422

Select „GTec“ during device detection.

Supported models:

- GT SUN-2,8K, GT SUN-6K, GT SUN-10K

Overview

- Interface not integrated; Retrofit RS485 interface board.
- Multi-string technology.
- 5-pin wiring - only at the RS422 interface.
- Communication address does not have to be assigned.

Note:

The order in which the inverters are displayed in the Solar-Log™ after detection is random. We strongly recommend that you change the order of the inverters immediately after detection at startup, in the Configuration | Devices | Configuration | Order dialog box.
► The inverters can be identified using the displayed serial number.

- Installation steps
  - Switch off the inverters and Solar-Log™
  - Connect inverters to the Solar-Log™
  - Connect the inverters to each other

Installing the RS485 interface

Procedure

Insert the RS485 interface in the bottom of the inverter according to the interface board installation instructions.

Note

Only connect inverter using the RS422 interface.

Connect inverters to the Solar-Log™

The wiring is done using a

- self-made, shielded 4 wire data cable.

Procedure

1. Open the inverter as shown in the inverter's instructions.
2. Pull the free wires through the wire opening in the inverter.
3. If you are making the cable yourself, connect the wires as shown in the following diagram:

Solar-Log™ Base RS422	RJ45 inverter
Terminal	PIN
► 6 (T/RX+)	► Rx +
► 8 GND	► GND
► 9 (T/RX-)	► Rx-
► 10 (R/TX+)	► Tx+
► 13 (R/TX-)	► Tx-

4. If no further inverter is connected, terminate the inverter according to the instructions for the inverter.
5. Close the inverter if no other inverters are to be connected.

Connect the inverters to each other

- Connect using a 4 wire, shielded data cable
- Where to connect: Terminal strip inside the inverter (on the retrofitted RS485 interface).

Procedure

- Open the inverter as shown in the inverter's instructions.
- Position the inverter up according to the diagram.
- Connect terminals R+, R-, T+ and T- of inverter 1 to the corresponding terminals on inverter 2.
- Connect the other inverters to each other in the same way.
- Terminate the last inverter according to the inverter instructions.
- Close inverters.



Note

A maximum of 32 inverters can be connected per RS422 bus.

45 Helios Systems

45.1 Helios Systems (HSI 20)

Termination	Addressing	Interface
Yes	Yes	RS485

Select „Helios“ during device detection.

Unterstützte Modelle:

- HSI 20

Overview

- Integrated interface.
- Where to connect: RJ45 socket on the outside of the inverter.
- 3-pin wiring.
- Communication address must be allocated.
- Installation steps:
  - Allocate communication address.
  - Switch off the inverters and Solar-Log™.
  - Connect inverters to the Solar-Log™.
  - Connect the inverters to each other.

Connect inverters to the Solar-Log™

The wiring is done using a

- self-made cable connection with RS485 data cable.

Procedure

1. Open the inverter as shown in the inverter's instructions.
2. Insert the RJ45 plug into any RJ45 socket on the first inverter.
3. If you are making the cable yourself, connect the wires as shown in the following diagram:

Solar-Log™ Base RS485 (A) / (B)	RJ45 inverter
Terminal	PIN
► (A) 6 or (B) 10 (Data+)	► 4
► (A) 8 or (B) 12 GND	► 3
► (A) 9 or (B) 13 (Data-)	► 5

4. If no further inverter connected, terminate the inverter.
5. Close the inverter if no other inverters are to be connected.



Caution

Risk of damage to the unit!
The Solar-Log™ also has an RJ45 socket, which must never be connected to the RJ45 socket on the inverter.

► Only connect inverters via the RS485/422 Solar-Log™ interface(s).

Connect the inverters to each other

- Connect using a network cable (patch cable)
- Where to connect: 2 RJ45 sockets

Procedure

1. Open the inverter as shown in the inverter's instructions.
2. Insert the RJ45 plug into any RJ45 socket on the first inverter.
3. Insert the other end of the wire into any RJ45 socket on inverter 2.
4. Connect the other inverters to each other in the same way.
5. Terminate the last inverter in accordance with the manufacturer's specifications.
6. Close the inverter if no other inverters are to be connected.

44.2 Helios Systems - Central Inverters

Termination	Addressing	Interface
No	Yes	Ethernet

Select „Helios“ during device detection.

Unterstützte Modelle:

- HS 80, HS 100, HS 120, HS 150, HS 200, HS 250, HSI 200, HSI 250, HSI 500, HSI 640

Overview

- Integrated interface.
- The inverter‘s IP address has to be assigned.
- Connect using network cable (patch cable) and Ethernet router or switch.
- Installation steps:
  - The inverter has to be assigned a static IP address.
  - Switch off the inverters and the Solar-Log™.
  - Connect inverters to the Solar-Log™ (RJ45).
  - Connect the inverters to each other (RJ45).
  -

Assign the communication address.

- Setting: Using the inverter display.
  Please follow the instructions in the manufacturer‘s manual.

Connect inverters and the Solar-Log™.

The wiring is done using a

- network cable (patch cable) and the
- Ethernet router or switch.

Procedure

1. Set different unit IPs on each inverter in accordance with the inverter‘s instructions.
2. Connect the Solar-Log™ and the inverter to the router or switch.

Note:

The inverter and the Solar-Log™ must be in the same class C subnet.
Example: Solar-Log™ has 192.168.178.49
In this case, the inverter must have an IP address from the range 192.168.178.xxx (xxx stands for a number between (1 - 254).

46 HiQ Solar

46.1 TrueString

Termination	Addressing	Interface
No	Yes	Ethernet

Select „HiQ Solar“ during device detection.

Supported models:

- TS208-5K75, TS480-8K (only in conjunction with TrueString Gateway)

Overview

- Integrated interface.
- Wiring the inverter (according to the manufacturer‘s instructions).
- Inverter addressing via TrueString Gateway (automatic).
- Connect the TrueString Gateway.
- Connect the Solar-Log™.
- Installation steps:
  - Switch off the inverters and Solar-Log™.
  - Connect the inverters to each other (according to the manufacturer‘s instructions).
  - Communication between inverter and TrueString Gateway (according to manufacturer‘s instructions).
  - Connect the TrueString Gateway to the router/switch.
  - Connect the Solar-Log™ to the router/switch.

Connect the inverters to each other

The inverters are connected together according to the inverter instructions.

Connect the Solar-Log™/ TrueString-Gateway

- Connect Solar-Log™ to router/switch.
- Connect TrueString Gateway to router/switch.
- The TrueString Gateway and the SolarLog™ must be on the same class C subnet.
  Example: SolarLog™ has 192.168.178.49
  In this case, the TrueString Gateway must have an IP address from the 192.168.178.xxx range (xxx represents a number between (1 - 254).

Addressing and detection of inverters

- The inverters are detected and addressed automatically via the TrueString Gateway (according to the manufacturer‘s instructions).

Detection via the Solar-Log™ WEB Interface

- For detection on the Solar-Log™, select the device class under the menu Configuration | Device | Definition | Interface with the plus symbol and then select „HiQ Solar“ as the manufacturer and the type. Confirm your selection with OK.
- Save your selections and then start the Device Detection under Configuration | Device | Detection.

47 HopeWind

47.1 HopeWind

Termination	Addressing	Interface
Yes	Yes	RS485

Select „HopeWind“ during device detection.

Supported models:

- HHSNV25K-G01, HSNV30K-G01, HSNV36K-G01, HSNV40K-G01, HSNV50K-G01, HSNV60K-G01, HSNV70K-G01, HSNV75K-G01, HSNV100K-G01, HSNV110K-G01, HSNV125K-G01, HSNV150K-G01

Overview

- Integrated interface.
- Where to connect:
  - At the bottom of the inverter
- 3-pin wiring.
- Assign the communication address according to the manufacturer‘s instructions.
- Installation steps:
  - Switch off the inverters and the Solar-Log™.
  - Connect the inverters to the Solar-Log™.
  - Connect the inverters to each other.

Connect inverters to the Solar-Log™

The wiring is done using a

- self-made cable connection.

Procedure

1. If you are making the cable yourself, connect the wires as shown in the following diagram:

Solar-Log™ Base RS485 (A) / (B)	PIN assignment inverter
Terminal	Pin
► (A) 6 or (B) 10 (Data+)	► 1 RS485-1+
► (A) 8 or (B) 12 GND	► 2 PE
► (A) 9 or (B) 13 (Data-)	► 3 RS485-1-

2. If no further inverter is connected, terminate the inverter according to the instructions for the inverter

Important note on the settings!

The parameters are set via the hopeCloud APP. Please be sure to read the manufacturer’s manual beforehand.
Please ensure that you are using the latest instructions from the manufacturer.

Wiring several inverters together

If several inverters are to be wired together, connect them as follows:

Procedure

1. If you are making the cable yourself, connect the wires as shown in the following diagram:

PIN assignment inverter1	PIN assignment inverter 2	PIN assignment inverter 2	PIN assignment inverter 3 etc.
PIN	Pin	PIN	PIN
► 6 RS485-1+	► 1 RS485-1+	► 6 RS485-1+	► 1 RS485-1+
► 7 PE	► 2 PE	► 7 PE	► 2 PE
► 8 RS485-1-	► 3 RS485-1-	► 8 RS485-1-	► 3 RS485-1-

2. If no further inverter is connected, terminate the inverter according to the instructions for the inverter

Very Important!

Please refer to the manufacturer's documentation in the current version when connecting the devices of the relevant manufacturer.

48 Huawei

48.1 Huawei Sun2000 V1

Termination	Addressing	Interface
Yes	Yes	RS485

Select „Huawei: V1“ during device detection.

Overview

- Integrated interface
- Where to connect:
  - RJ45 socket, inside the inverter or
  - RS485 terminal block inside the inverter.
- 2-pin wiring
- Communication address must be allocated
- Installation steps
  - Switch off the inverters and Solar-Log™
  - Connect inverters to the Solar-Log™
  - Connect the inverters to each other

Connect inverters to the Solar-Log™

The wiring is done using a

- self-made cable connection with RS485 data cable.

Procedure (Version RJ45 socket):

1. Open the inverter as shown in the inverter's instructions.
2. Insert the RJ45 plug into RS485-Out socket on the inverter.
3. If you are making the cable yourself, connect the wires as shown in the following diagram.
4. Address the inverter according to the manufacturer's specifications.
   Address range 1 to 247.
5. If no further inverter is connected, terminate the inverter according to the instructions for the inverter.
6. Close the inverter if no other inverters are to be connected.



Caution

Risk of damage to the unit!
The Solar-Log™ also has an RJ45 socket, which must never be connected to the RJ45 socket on the inverter.

► Only connect inverters via the RS485/422 Solar-Log™ interface(s).

Procedure (Version RS485 terminal block):

1. Open the inverter as shown in the inverter's instructions.
2. For self-assembly of the cable connection, connect the cables to the RS485 terminal block using the diagram above.
3. Connect the remaining inverters with the network cable.
4. Terminate the last inverter in accordance with the manufacturer's specifications.
5. Close the inverter if no other inverters are to be connected.

Connect the inverters to each other

- Connect using a network cable (patch cable).
- Where to connect: 2 RJ45 sockets.
- Wiring of the inverters according to the instructions for the inverter.

The following table is for the following models:

- SUN2000-8KTL, 10KTL, 12KTL, 15KTL, 17KTL, 20KTL, 23KTL, 28KTL, 43KTL-IN-C1, 50KTL, 50KTL-C1

Solar-Log™ Base RS485 (A) / (B)	RS485 terminal block (RS485-Out)
Terminal	Pin
► (A) 6 or (B) 10 (Data+)	► 1 RS485 A or 4 RS485 A
► (A) 9 or (B) 13 (Data-)	► 2 RS485 B or 5 RS485 B

The following table is for the following models:

- SUN2000-25KTL

Solar-Log™ Base RS485 (A) / (B)	RS485 terminal block
Terminal	Pin
► (A) 6 or (B) 10 (Data+)	► 5 RS485 A or 6 RS485 A
► (A) 9 or (B) 13 (Data-)	► 7 RS485 B or 8 RS485 B

The following table is for the following models:

- SUN2000-43KTL-IN-C1, 50KTL, 50KTL-C1

Solar-Log™ Base RS485 (A) / (B)	RS485 terminal block
Terminal	Pin
► (A) 6 or (B) 10 (Data+)	► 2 RS485 A (Out)
► (A) 9 or (B) 13 (Data-)	► 4 RS485 B (Out)

The following table is for the following models:

- Sun2000-33KTL, 33KTL-A, 33KTL-US, 36KTL, 36KTL-US, 40KTL, 40KTL-US, 42KTL, 45KTL-US-HV-D0, 55KTL-HV-D1/D1-001, 55KTL-IN-HV-D1 and 60KTL-HV-D1/D1-001

Solar-Log™ Base RS485 (A) / (B)	RS485 terminal block
Terminal	Pin
► (A) 6 or (B) 10 (Data+)	► 1 RS485 A (IN)
► (A) 9 or (B) 13 (Data-)	► 3 RS485 B (IN)

Solar-Log™ Base RS485 (A) / (B)	RJ45 inverter (RS485-Out)
Terminal	PIN
► (A) 6 or (B) 10 (Data+)	► 1 RS485 A or 4 RS485 A
► (A) 9 or (B) 13 (Data-)	► 2 RS485 B or 5 RS485 B

The following table is for the following models:

- SUN2000-24.7KTL-JP, 25KTL-US, 30KTL-US, 33KTL, 33KTL-E001, 33KTL-JP, 40KTL, 40KTL-JP

Solar-Log™ Base RS485 (A) / (B)	RS485 terminal block
Terminal	Pin
► (A) 6 or (B) 10 (Data+)	► 6 RS485 A (Out)
► (A) 9 or (B) 13 (Data-)	► 8 RS485 B (Out)

Solar-Log™ Base RS485 (A) / (B)	RJ45 inverter (RS485-Out)
Terminal	PIN
► (A) 6 or (B) 10 (Data+)	► 1 RS485 A or 4 RS485 A
► (A) 9 or (B) 13 (Data-)	► 2 RS485 B or 5 RS485 B



Note on the feed-in management control!

The active power ramp rate can lead to a too slow power adjustment of the inverter for some use cases. In these cases, the default value should be increased to a higher percentage (e.g. 500%).

Very important note!

When wiring via RS485, parallel operation with the Solar-Log and the WiFi dongle is not possible!
If the WiFi dongle is plugged into the inverter during the detection process, correct detection of the inverter via the Solar-Log is not possible.
Subsequent insertion of the WiFi dongle into the inverter is also not recommended, as this can permanently disrupt communication between the inverter and Solar-Log.
An additional installation of the manufacturer's data logger in parallel operation with the Solar-Log is also not recommended, as this can also lead to communication problems with the Solar-Log.

48.2 Huawei Sun2000 V2

Termination	Addressing	Interface
Yes	Yes	RS485

Select „Huawei: V2“ during device detection.

Overview

- Integrated interface
- Where to connect:
  - RJ45 socket, inside the inverter or
  - RS485 terminal block inside the inverter.
- 2-pin wiring
- Communication address must be allocated
- Installation steps
  - Switch off the inverters and Solar-Log™
  - Connect inverters to the Solar-Log™
  - Connect the inverters to each other

Connect inverters to the Solar-Log™

The wiring is done using a

- self-made cable connection with RS485 data cable.

Procedure (Version RJ45 socket):

1. Open the inverter as shown in the inverter's instructions.
2. Insert the RJ45 plug into RS485-Out socket on the inverter.
3. If you are making the cable yourself, connect the wires as shown in the following diagram
4. Address the inverter according to the manufacturer's specifications.
   Address range 1 to 247.
5. If no further inverter is connected, terminate the inverter according to the instructions for the inverter.
6. Close the inverter if no other inverters are to be connected.



Caution

Risk of damage to the unit!
The Solar-Log™ also has an RJ45 socket, which must never be connected to the RJ45 socket on the inverter.

► Only connect inverters via the RS485/422 Solar-Log™ interface(s).

Procedure (Version RS485 terminal block):

1. Open the inverter as shown in the inverter's instructions.
2. For self-assembly of the cable connection, connect the cables to the RS485 terminal block using the diagram above.
3. Connect the remaining inverters with the network cable.
4. Terminate the last inverter in accordance with the manufacturer's specifications.
5. Close the inverter if no other inverters are to be connected.

Connect the inverters to each other

- Connect using a network cable (patch cable).
- Where to connect: 2 RJ45 sockets.
- Wiring of the inverters according to the instructions for the inverter.

NOTE!

The following table for models not listed:

Solar-Log™ Base RS485 (A) / (B)	RS485 terminal block of the inverter
Terminal	Pin
► (A) 6 or (B) 10 (Data+)	► RS485-A / RS485+
► (A) 9 or (B) 13 (Data-)	► RS485-B / RS485-

Please refer to the inverter manufacturer's manual for the corresponding PIN designations.

The following tables is for the following models:

- Sun2000-50KTL-M0, 50KTL-JPM0, 50KTL-JPM1, 60KTL-M0, 63KTL-JPM0, 65KTL-M0, 70KTL-C1, 70KTL-INM0, 75KTL-C1, SUN2000-63KTL-JPH0, SUN2000-100KTL-USH0, SUN2000-100KTL-H1, SUN2000-100KTL-H0, SUN2000-90KTL-H1, SUN2000-95KTL-INH0, SUN2000-90KTL-H0, SUN2000-105KTL-H0, SUN2000-100KTL-H2, SUN2000-105KTL-H1, SUN2000-105KTL-USH0, SUN2000-90KTL-H2, SUN2000-95KTL-INH1, SUN2000-100KTL-M0, SUN2000-100KTL-M1, SUN2000-100KTL-INM0, SUN2000-110KTL-M0, SUN2000-125KTL-M0

Solar-Log™ Base RS485 (A) / (B)	RS485 terminal block of the inverter
Terminal	Pin
► (A) 6 or (B) 10 (Data+)	► 1 RS485 A (IN)
► (A) 9 or (B) 13 (Data-)	► 3 RS485 B (IN)

Solar-Log™ Base RS485 (A) / (B)	RJ45 inverter (RS485-Out)
Terminal	PIN
► (A) 6 or (B) 10 (Data+)	► 1 RS485 A or 4 RS485 A
► (A) 9 or (B) 13 (Data-)	► 2 RS485 B or 5 RS485 B

The following table for the following models:

- SUN2000-(2KTL-5KTL)-L0, SUN2000-4.95KTL-JPL0, SUN2000-3KTL-CNL0, SUN2000-4KTL-CNL0, SUN2000-5KTL-CNL0, SUN2000-6KTL-CNL0

Solar-Log™ Base RS485 (A) / (B)	RS485 terminal block of the inverter
Terminal	Pin
► (A) 6 or (B) 10 (Data+)	► 2 485A1 (+)
► (A) 9 or (B) 13 (Data-)	► 1 485B1 (-)

The following table for the following models:

- SUN2000-(3.8KTL-11.4KTL)-USL0

Solar-Log™ Base RS485 (A) / (B)	RS485 terminal block of the inverter
Terminal	Pin
► (A) 6 or (B) 10 (Data+)	► 7 RS485A1 (+)
► (A) 9 or (B) 13 (Data-)	► 8 RS485B1 (-)

The following table for the following models:

- SUN2000-100KTL-M2, SUN2000-110KTL-M2, SUN2000-115KTL-M2, SUN2000-125KTL-JPH0, SUN2000-150K-MG0, SUN2000-196KTL-H0, SUN2000-200KTL-H2, SUN2000-215KTL-H0, SUN2000-215KTL-H3, SUN2000-250KTL-H1, SUN2000-250KTL-H3, SUN2000-280KTL-H0, SUN2000-300KTL-H0, SUN2000-330KTL-H1, SUN2000-330KTL-H2

Solar-Log™ Base RS485 (A) / (B)	RS485 COM connection of the inverter
Terminal	Pin
► (A) 6 or (B) 10 (Data+)	► 2 RS485A OUT (+)
► (A) 9 or (B) 13 (Data-)	► 4 RS485B OUT (-)

Important note on feed-in management control with SUN2000-330KTL devices!

Feed-in management control with SUN2000-330KTL devices can only be performed in conjunction with a Huawei Smart Logger.
This note no longer applies with firmware 6.4.1. With this firmware, it is now possible to perform PM control of these devices with the Solar-Log Base as well.

The following table for the following models:

- SUN600-(15KTL-25KTL)-ZHM0, SUN2000-(3KTL-15KTL)-M0, SUN2000-(12KTL, 17KTL, 20KTL)-M0, SUN2000-(3KTL-10KTL)-M1, SUN2000-12KTL-M1, SUN2000-8KTL-M2, 10KTL-M2, 12KTL-M2, 15KTL-M2, 17KTL-M2, 20KTL-M2, SUN2000-(15KTL-50KTL)-M3, SUN2000-12K-MB0, SUN2000-15K-MB0, SUN2000-17K-MB0, SUN2000-20K-MB0, SUN2000-25K-MB0, SUN2000-15K-MB0-ZH, SUN2000-17K-MB0-ZH, SUN2000-20K-MB0-ZH, SUN2000-25K-MB0-ZH, SUN2000-25KTL-NAM3, SUN2000-30KTL-NAM3, SUN2000-33KTL-NAM3, SUN2000-36KTL-NAM3, SUN2000-40KTL-NAM3, SUN2000-43KTL-INM3, SUN2000-30K-MC0, SUN2000-40K-MC0, SUN2000-50K-MC0

Solar-Log™ Base RS485 (A) / (B)	RS485 COM connection of the inverter
Terminal	Pin
► (A) 6 or (B) 10 (Data+)	► 1 485A1-1 (+)
► (A) 9 or (B) 13 (Data-)	► 3 485B1-1 (-)

The following table for the following models:

- SUN2000-30KTL-A, SUN2000-33KTL, SUN2000-40KTL

Solar-Log™ Base RS485 (A) / (B)	RS485 terminal block of the inverter
Terminal	Pin
► (A) 6 or (B) 10 (Data+)	► 6 RS485 A (Out)
► (A) 9 or (B) 13 (Data-)	► 8 RS485 B (Out)

Solar-Log™ Base RS485 (A) / (B)	RJ45 inverter
Terminal	Pin
► (A) 6 or (B) 10 (Data+)	► 1 RS485 A or 4 RS485 A
► (A) 9 or (B) 13 (Data-)	► 2 RS485 B or 5 RS485 B

The following table for the following models:

- SUN2000-12KTL-M5, SUN2000-15KTL-M5, SUN2000-17KTL-M5, SUN2000-20KTL-M5, SUN2000-25KTL-M5, SUN2000-15KTL-ZHM5, SUN2000-17KTL-ZHM5, SUN2000-20KTL-ZHM5, SUN2000-25KTL-ZHM5

Solar-Log™ Base RS485 (A) / (B)	RS485 terminal block of the inverter
Terminal	Pin
► (A) 6 or (B) 10 (Data+)	► 9 485A1 (+)
► (A) 9 or (B) 13 (Data-)	► 10 485B1 (-)

Note

Please be sure to follow the inverter manufacturer's installation instructions.

Note on the feed-in management control!

The active power ramp rate can lead to a too slow power adjustment of the inverter for some use cases. In these cases, the default value should be increased to a higher percentage (e.g. 500%).

Very important note!

When wiring via RS485, parallel operation with the Solar-Log and the WiFi dongle is not possible!
If the WiFi dongle is plugged into the inverter during the detection process, correct detection of the inverter via the Solar-Log is not possible.
Subsequent insertion of the WiFi dongle into the inverter is also not recommended, as this can permanently disrupt communication between the inverter and Solar-Log.
An additional installation of the manufacturer's data logger in parallel operation with the Solar-Log is also not recommended, as this can also lead to communication problems with the Solar-Log.

49 Hyundai

49.1 Hyundai HPC-050HT-E and HPC-100HT-E

Termination	Addressing	Interface
Yes	Yes	RS485

Select „Hyundai“ during device detection.

Overview

- Integrated interface
- Where to connect: RJ45 CN socket on the outside of the inverter
- 2-pin wiring
- Communication address must be allocated
- Installation steps
  - Switch off the inverters and Solar-Log™
  - Connect inverters to the Solar-Log™
  - Connect the inverters to each other
  - Allocate communication address

Connect inverters to the Solar-Log™

The wiring is done using a

- self-made cable connection with RS485 data cable.



Caution

Risk of damage to the unit!
The Solar-Log™ also has an RJ45 socket, which must never be connected to the RJ45 socket on the inverter.

► Only connect inverters via the RS485/422 Solar-Log™ interface(s).

Procedure

1. If you are making the cable yourself, connect the wires as shown in the following diagram:

Solar-Log™ Base RS485 (A) / (B)	RJ45 inverter
Terminal	PIN
► (A) 6 or (B) 10 (Data+)	► 3
► (A) 9 or (B) 13 (Data-)	► 6

2. Insert RJ45 plug into socket CN on the inverter.
3. If no further inverter is connected, terminate the inverter according to the instructions for the inverter

Connect the inverters to each other

- Connect using a network cable (patch cable)
- Where to connect: RJ45 sockets on the outside of the inverter.

Procedure

1. Insert the RJ45 plug into any RJ45 socket on inverter 1.
2. Insert the other end of the wire into any RJ45 socket on inverter 2.
3. Connect the other inverters to each other in the same way.
4. Terminate the last inverter in accordance with the inverter instructions.

Allocate communication address

- Recommendation: Continuous numbering starting with 1.
- Setting: Using the inverter display
- Procedure: Start according to the inverter's instructions

49.2 Hyundai HPC-250HT-E

Termination	Addressing	Interface
Yes	Yes	RS485

Select „Hyundai“ during device detection.

Overview

- Integrated interface
- Where to connect: 20 pin connection strip on the outside of the inverter at the top edge of the i-8142iW module
- 2-pin wiring
- Communication address must be allocated
- Installation steps
  - Switch off the inverters and Solar-Log™
  - Connect inverters to the Solar-Log™
  - Connect the inverters to each other
  - Allocate communication address

Connect inverters to the Solar-Log™

The wiring is done using a

- self-made, shielded 2 wire data cable.



Caution

Risk of damage to the unit!
The Solar-Log™ also has an RJ45 socket, which must never be connected to the RJ45 socket on the inverter.

► Only connect inverters via the RS485/422 Solar-Log™ interface(s).

Procedure

1. If you are making the cable yourself, connect the wires as shown in the following diagram:

Solar-Log™ Base RS485 (A) / (B)	Inverter terminal strip
Terminal	Terminal
► (A) 6 or (B) 10 (Data+)	► D1+/TxD1+
► (A) 9 or (B) 13 (Data-)	► D1-/TxD1-

2. If no further inverter is connected, terminate the inverter according to the instructions for the inverter.

Connect the inverters to each other

- Connect using a 2 wire, shielded data cable
- Where to connect: 20 pin connection strip on the inverter at the top edge of the i-8142iW module.

Procedure

1. Connect terminal D1+/TxD1+ on inverter 1 to terminal D1+/TxD1+ on inverter 2.
2. Connect terminal D1–/TxD1– on inverter 1 to terminal D1–/TxD1– on inverter 2.
3. Connect the other inverters to each other in the same way.
4. Terminate the last inverter in accordance with the inverter instructions.

Allocate communication address

- Recommendation: Continuous numbering starting with 1.
- Setting: Using PC software for configuring inverters.
- Procedure: Start according to the inverter's instructions.

50 Ingeteam

50.1 INGECON® SUN 1Play TL M

Termination	Addressing	Interface
Jumper P3	Yes	*RS485 (optional) via INGECON Comm

Select „Ingeteam“ during device detection.

Supported models:

- INGECON® SUN 1Play 2.5TL M
- INGECON® SUN 1Play 3TL M
- INGECON® SUN 1Play 3.3TL M
- INGECON® SUN 1Play 3.68TL M
- INGECON® SUN 1Play 4.6TL M
- INGECON® SUN 1Play 5TL M
- INGECON® SUN 1Play 6TL M

Note:

The SUN 1Play TL M models have 1 phase and 2 MPP tracker.

Overview:

- *The RS485 interface is optional and can be retrofitted via the INGECON Comm connection. Please contact Ingeteam support for information about communication accessories.
- 3-pin wiring.
- Communication address must be allocated.
- Installation steps:
  - Switch off the inverters and Solar-Log™.
  - Install the RS485 interface in the inverter.
  - Connect inverters to the Solar-Log™.
  - Connect the inverters to each other.
  - Allocate communication address.

Installing the RS485 interface

Procedure

► Install the RS485 interface in the inverter in accordance with the interface board installation instructions.

Connect inverters to the Solar-Log™

The wiring is done using a

- self-made, shielded 3 wire data cable.

Procedure

1. Open the inverter as shown in the inverter's instructions.
2. Retrofit the interface according to the manufacturer's instructions.
3. Pull the free wires through the wire opening in the inverter.
4. If you are making the cable yourself, connect the wires as shown in the following diagram:

Solar-Log™ Base RS485 (A) / (B)	Inverter terminal strip
Terminal	Terminal
► (A) 6 or (B) 10 (Data+)	► Pin 1 RS485-B (+)
► (A) 8 or (B) 12 GND	► Pin 4 GND
► (A) 9 or (B) 13 (Data-)	► Pin 2 RS485-A (-)

5. If no further inverter connected, terminate the inverter:
   Insert jumper JP3 into the RS485 card.
6. Close the inverter if no other inverters are to be connected.

Connect the inverters to each other

- Connect using a 3 wire, shielded data cable
- Where to connect: Terminal strip inside the inverter (on the retrofitted RS485 interface)

Procedure

1. Open the inverter as shown in the inverter's instructions.
2. Connect terminals "Pin 1-RS485-B (+)", "Pin 4-GND" and "Pin 2-RS485-A (-)" of inverter 1 to the corresponding terminals on inverter 2.
3. Connect the other inverters to each other in the same way.
4. Terminate the last inverter.
   Insert jumper JP3 into the RS485 card.
5. Close inverters.

Allocate communication address

- Recommendation: Continuous numbering starting with 1.
- Setting: Using the inverter display.
- Procedure: Start according to the inverter's instructions.

Very important!

In order to communicate via RS485, additional communication accessories must be used, which are connected via the INGECON Comm interface.
Please contact Ingeteam Support directly and follow the instructions provided by the inverter manufacturer.

Very important!

In order to communicate with multiple inverters via RS485, a communication bus must be created.
Please contact Ingeteam support for assistance with this.

50.2 INGECON® SUN 3Play TL

Termination	Addressing	Interface
Jumper	Yes	RS485

Select „Ingeteam“ during device detection.

Supported models:

- INGECON® SUN 3Play 10TL
- INGECON® SUN 3Play 15TL
- INGECON® SUN 3Play 20TL
- INGECON® SUN 3Play 28TL
- INGECON® SUN 3Play 33TL

Note:

The SUN 3Play TL models have 3 phase and 1 MPP tracker.

Overview:

- Integrated interface.
- 3-pin wiring.
- Communication address must be allocated.
- Installation steps:
  - Switch off the inverters and Solar-Log™.
  - Connect inverters to the Solar-Log™.
  - Connect the inverters to each other.
  - Allocate communication address.

Connect inverters to the Solar-Log™

The wiring is done using a

- self-made, shielded 3 wire data cable.

Procedure

1. Open the inverter as shown in the inverter‘s instructions.
2. Pull the free wires through the wire opening in the inverter.
3. If you are making the cable yourself, connect the wires as shown in the following diagram:

Solar-Log™ Base RS485 (A) / (B)	Inverter terminal strip
Terminal	Terminal
► (A) 6 or (B) 10 (Data+)	► Pin 1 RS485-B (+)
► (A) 8 or (B) 12 GND	► Pin 4 GND
► (A) 9 or (B) 13 (Data-)	► Pin 2 RS485-A (-)

4. If no further inverter connected, terminate the inverter:
   Insert jumper into the RS485 card.
5. Close the inverter if no other inverters are to be connected.

Connect the inverters to each other

- Connect using a 3 wire, shielded data cable.
- Where to connect: Terminal strip inside the inverter.

Procedure

1. Open the inverter as shown in the inverter's instructions.
2. Connect terminals „Pin 1-RS485-B (+)", „Pin 4-GND" and „Pin 2-RS485-A (-)" of inverter 1 to the corresponding terminals on inverter 2.
3. Connect the other inverters to each other in the same way.
4. Terminate the last inverter.
   Insert jumper JP3 into the RS485 card.
5. Close inverters.

Allocate communication address

- Recommendation: Continuous numbering starting with 1.
- Setting: Using the inverter display.
- Procedure: Start according to the inverter's instructions.

Very important!

In order to communicate with multiple inverters via RS485, a communication bus must be created. Please contact Ingeteam support for assistance with this.

50.3 INGECON® SUN 3Play TL M

Termination	Addressing	Interface
Jumper	Yes	RS485

Select „Ingeteam“ during device detection.

Supported models:

- INGECON® SUN 3Play 10TL M
- INGECON® SUN 3Play 15TL M
- INGECON® SUN 3Play 20TL M
- INGECON® SUN 3Play 24TL M480
- INGECON® SUN 3Play 28TL M
- INGECON® SUN 3Play 33TL M
- INGECON® SUN 3Play 40TL M480

Note:

The SUN 3Play TL M models have 3 phase and 2 MPP tracker.

Overview:

- Integrated interface.
- 3-pin wiring.
- Communication address must be allocated.
- Installation steps:
  - Switch off the inverters and Solar-Log™.
  - Connect inverters to the Solar-Log™.
  - Connect the inverters to each other.
  - Allocate communication address.

Connect inverters to the Solar-Log™

The wiring is done using a

- self-made, shielded 3 wire data cable.

Procedure

1. Open the inverter as shown in the inverter‘s instructions.
2. Pull the free wires through the wire opening in the inverter.
3. If you are making the cable yourself, connect the wires as shown in the following diagram:

Solar-Log™ Base RS485 (A) / (B)	Inverter terminal strip
Terminal	Terminal
► (A) 6 or (B) 10 (Data+)	► Pin 1 RS485-B (+)
► (A) 8 or (B) 12 GND	► Pin 4 GND
► (A) 9 or (B) 13 (Data-)	► Pin 2 RS485-A (-)

4. If no further inverter connected, terminate the inverter:
   Insert jumper into the RS485 card.
5. Close the inverter if no other inverters are to be connected.

Connect the inverters to each other

- Connect using a 3 wire, shielded data cable.
- Where to connect: Terminal strip inside the inverter.

Procedure

1. Open the inverter as shown in the inverter's instructions.
2. Connect terminals „Pin 1-RS485-B (+)", „Pin 4-GND" and „Pin 2-RS485-A (-)" of inverter 1 to the corresponding terminals on inverter 2.
3. Connect the other inverters to each other in the same way.
4. Terminate the last inverter.
   Insert jumper into the RS485 card.
5. Close inverters.

Allocate communication address

- Recommendation: Continuous numbering starting with 1.
- Setting: Using the inverter display.
- Procedure: Start according to the inverter's instructions.



Very important!

In order to communicate with multiple inverters via RS485, a communication bus must be created. Please contact Ingeteam support for assistance with this.

50.4 INGECON® SUN 3Play 24/40TL U M480

Termination	Addressing	Interface
Jumper	Yes	RS485

Select „Ingeteam“ during device detection.

Supported models:

- INGECON® SUN 3Play 24TL U M480
- INGECON® SUN 3Play 40TL U M480

Note:

The SUN 3Play 24/40TL U M480 model have 3 phase and 2 MPP tracker.

Overview:

- Integrated interface.
- 3-pin wiring.
- Communication address must be allocated.
- Installation steps:
  - Switch off the inverters and Solar-Log™.
  - Connect inverters to the Solar-Log™.
  - Connect the inverters to each other.
  - Allocate communication address.

Connect inverters to the Solar-Log™

The wiring is done using a

- self-made, shielded 3 wire data cable and terminal block connector.

Procedure

1. Open the inverter as shown in the inverter‘s instructions.
2. Pull the free wires through the wire opening in the inverter.
3. If you are making the cable yourself, connect the wires as shown in the following diagram:

Solar-Log™ Base RS485 (A) / (B)	Inverter terminal strip
Terminal	Terminal
► (A) 6 or (B) 10 (Data+)	► Pin 1 RS485-B (+)
► (A) 8 or (B) 12 GND	► Pin 4 GND
► (A) 9 or (B) 13 (Data-)	► Pin 2 RS485-A (-)

4. If no further inverter connected, terminate the inverter:
   Insert jumper into the RS485 card.
5. Close the inverter if no other inverters are to be connected.

Connect the inverters to each other

- Connect using a 3 wire, shielded data cable.
- Where to connect: Terminal strip inside the inverter.

Procedure

1. Open the inverter as shown in the inverter's instructions.
2. Connect terminals „Pin 1-RS485-B (+)", „Pin 4-GND" and „Pin 2-RS485-A (-)" of inverter 1 to the corresponding terminals on inverter 2.
3. Connect the other inverters to each other in the same way.
4. Terminate the last inverter.
   Insert jumper into the RS485 card.
5. Close inverters.

Allocate communication address

- Recommendation: Continuous numbering starting with 1.
- Setting: Using the inverter display.
- Procedure: Start according to the inverter's instructions.



Very important!

In order to communicate with multiple inverters via RS485, a communication bus must be created. Please contact Ingeteam support for assistance with this.

50.5 INGECON® SUN 3Play 100TL

Termination	Addressing	Interface
Jumper	Yes	*RS485 (optional) via INGECON Comm

Select „Ingeteam“ during device detection.

Supported models:

- INGECON® SUN 3Play 100TL

Note:

The SUN 3Play 100TL series have 3 phase and 1 MPP tracker.

Overview:

- *The RS485 interface is optional and can be retrofitted via the INGECON Comm connection. Please contact Ingeteam support for information about communication accessories.
- 3-pin wiring.
- Communication address must be allocated.
- Installation steps:
  - Switch off the inverters and Solar-Log™.
  - Install the RS485 interface in the inverter.
  - Connect inverters to the Solar-Log™.
  - Connect the inverters to each other.
  - Allocate communication address.

Connect inverters to the Solar-Log™

The wiring is done using a

- self-made, shielded 3 wire data cable.

Procedure

1. Open the inverter as shown in the inverter‘s instructions.
2. Retrofit the interface according to the manufacturer‘s instructions.
3. Pull the free wires through the wire opening in the inverter.
4. If you are making the cable yourself, connect the wires as shown in the following diagram:

Solar-Log™ Base RS485 (A) / (B)	Inverter terminal strip
Terminal	Terminal
► (A) 6 or (B) 10 (Data+)	► Pin 1 RS485-B (+)
► (A) 8 or (B) 12 GND	► Pin 4 GND
► (A) 9 or (B) 13 (Data-)	► Pin 2 RS485-A (-)

5. If no further inverter connected, terminate the inverter:
   Insert jumper into the RS485 card.
6. Close the inverter if no other inverters are to be connected.

Connect the inverters to each other

- Connect using a 3 wire, shielded data cable.
- Where to connect: Terminal strip inside the inverter.

Procedure

1. Open the inverter as shown in the inverter's instructions.
2. Connect terminals „Pin 1-RS485-B (+)", „Pin 4-GND" and „Pin 2-RS485-A (-)" of inverter 1 to the corresponding terminals on inverter 2.
3. Connect the other inverters to each other in the same way.
4. Terminate the last inverter.
   Insert jumper into the RS485 card.
5. Close inverters.

Allocate communication address

- Recommendation: Continuous numbering starting with 1.
- Setting: Using the inverter display.
- Procedure: Start according to the inverter's instructions.

Very important!

In order to communicate via RS485, additional communication accessories must be used, which are connected via the INGECON Comm interface.
Please contact Ingeteam Support directly and follow the instructions provided by the inverter manufacturer.

50.6 INGECON® - Sun Power & Max / Sun Smart & TL / Sun Lite / 1 phase

Termination	Addressing	Interface
Jumper / 120 Ohm	Yes	*RS485 (optional)

Select „Ingeteam“ during device detection.

Overview

- *RS485 interface must be retrofitted, except for Sun Lite devices, where the interface is integrated; however, a Harting flying connector must be used in addition.
- 3-pin wiring.
- Communication address must be allocated.
- Installation steps:
  - Switch off the inverters and Solar-Log™.
  - Install the RS485 interface in the inverter.
  - Connect inverters to the Solar-Log™.
  - Connect the inverters to each other.
  - Allocate communication address (see the inverter manufacturer‘s manual).

Connect inverters to the Solar-Log™

The wiring is done using a

- self-made, shielded 3 wire data cable.

Procedure for Harting quick connectors (RS485):

1. Open the inverter as shown in the inverter‘s instructions.
2. Retrofit the interface according to the manufacturer‘s instructions.
3. Pull the free wires through the wire opening in the inverter.
4. Connect the wires according to the following diagram:

Solar-Log™ Base RS485 (A) / (B)	Harting quick connector (RS485)
Terminal	PIN
► (A) 6 or (B) 10 (Data+)	► Pin 1-RS485-B (+)
► (A) 8 or (B) 12 GND	► Pin 5-GND
► (A) 9 or (B) 13 (Data-)	► Pin 2-RS485-A (-)

5. If no further inverter connected, terminate the inverter:
   Connect the supplied 120 ohm resistor between pins 1 and 2 on the last inverter (see the inverter manufacturer‘s manual).
6. Close the inverter if no other inverters are to be connected.

Connect the inverters to each other

- Connect using a 3 wire, shielded data cable.
- Connect according to the inverter manufacturer‘s manual.

Procedure for the RS485 interface:

1. Open the inverter as shown in the inverter's instructions.
2. Retrofit the interface according to the manufacturer's instructions.
3. Pull the free wires through the wire opening in the inverter.
4. Connect the wires according to the following diagram:

Solar-Log™ Base RS485 (A) / (B)	RS485-Schnittstelle
Terminal	PIN
► (A) 6 or (B) 10 (Data+)	► Pin 1-RS485-B (+)
► (A) 8 or (B) 12 GND	► Pin 6-GND
► (A) 9 or (B) 13 (Data-)	► Pin 2-RS485-A (-)

5. If no further inverter connected, terminate the inverter:
   Insert jumper J3 on the RS485 card of the last inverter.
6. Close the inverter if no other inverters are to be connected.

Procedure for Sun-Lite devices:

1. Remove the protective cover of the plug connection and insert the plug connection at the bottom of the inverter.
2. Connect the wires according to the following diagram:

Solar-Log™ Base RS485 (A) / (B)	RS485 plug connection, Harting type
Terminal	PIN
► (A) 6 or (B) 10 (Data+)	► Pin 1-RS485-B (+)
► (A) 8 or (B) 12 GND	► Pin 3-GND
► (A) 9 or (B) 13 (Data-)	► Pin 2-RS485-A (-)

3. If no further inverters are connected, terminate the inverter according to the inverter instructions.



Very important!

Please note that the devices mentioned above in section 50.6 are older devices that do not have a reactive power control function.

► If you have any questions or problems regarding the inverters, always contact the inverter manufacturer's support team.

51 INVT iMARS

51.1 INVT iMARS / MG series / BG series

Termination	Adressing	Interface
-	Yes	RS485

Select „INVT“ during device detection.

Supported models:

- iMars BG4KTR, iMars BG5KTR, iMars BG6KTR, iMars BG8KTR, iMars BG10KTR, iMars BG12KTR, iMars BG15KTR, iMars BG17KTR, iMars BG20KTR, iMars BG20KTR-M, iMars BG25KTR, iMars BG30KTR, iMars BG33KTR, iMars BG35KTR, iMars BG40KTR, iMars BG50KTR, iMars BG60KTR
- iMars BG7KTR-US, iMars BG9KTR-US, iMars BG10KTR-US, iMars BG12KTR-US, iMars BG15KTR-US, iMars BG-17KTR-US, iMars BG20KTR-US, iMars BG25KTR-US, iMars BG30KTR-US
- iMars MG750TL, iMars MG1KTL, iMars MG1K5TL, IMars MG2KTL, IMars MG3KTL, IMars MG4KTL, iMars MG-4K6TL, iMars MG5KTL, iMars MG3KTL-2M, iMars MG4KTL-2M, iMars MG4K6TL-2M, iMars MG5KTL-2M

Overview

- Integrated interface
- Connection via RS485
- 3-pin wiring
- The communication address has to be assigned (is set to 1 by default)
- Installation steps
  - Switch off the inverters and Solar-Log™
  - Connect inverters to the Solar-Log™
  - Connect the inverters to each other
  - Allocate communication address

Connect inverters to the Solar-Log™

The wiring is done using a

- Self-made cable connection using the RS485 connector.

Procedure

1. Connect the wires according to the following diagram:

Solar-Log™ Base RS485 (A) / (B)	RS485 connector
Terminal	Pin
► (A) 6 or (B) 10 (Data+)	► 2 (RS485+)
► (A) 8 or (B) 12 GND	► 4 GND
► (A) 9 or (B) 13 (Data-)	► 3 (RS485-)

2. Connect the RS485 connector to the inverter according to the inverter instructions.

Connect the inverters together

- Start according to the inverter's instructions.

Assign the communication address

- Start according to the inverter's instructions.

Note Feed-in Management

Reductions of less than 10% are set to 10% with the MG series inverters.

► The BG series models can be set to 1% to 100%.

Very important!

For the connection of the devices of the respective manufacturer, please observe the manufacturer's documentation in the respective valid version.

51.2 INVT iMARS / XG series

Termination	Adressing	Interface
-	Yes	RS485

Select „INVT“ during device detection.

Supported models:

- XG17KTR, XG20KTR, XG22KTR, XG25KTR, XG30KTR, XG33KTR, XG36KTR, XG40KTR, XG50KTR, XG50KTRL, XG-60KTR, XG60KTRL, XG66KTRL, XG70KTRL, XG100KTR-F, XG110KTR-F, XG125KTR-F, XG136KTR-LF, XG136KTR-XF, XG1KTL-S, XG1.5KTL-S, XG2KTL-S, XG2.5KTL-S, XG3KTL-S, XG3.68KTL-S, XG4KTL-S, XG4.2KTL-S, XG4.6KTL-S, XG5KTL-S, XG3KTL-2M, XG3.68KTL, XG4KTL, XG4.2KTL, XG4.6KTL, XG5KTL, XG6KTL, XG7KTL, XG8KTL, XG10KTL, XG7KTL1, XG8KTL1, XG10KTL1, XG3KTR-S, XG4KTR-S, XG5KTR-S, XG6KTR-S, XG8KTR-S, XG9KTR-S, XG10KTR-S, XG11KTR-S, XG12KTR-S, XG15KTR1-S

Overview

- Integrated interface
- Connection via RS485
- 3-pin wiring
- The communication address has to be assigned (is set to 1 by default)
- Installation steps
  - Switch off the inverters and Solar-Log™
  - Connect inverters to the Solar-Log™
  - Connect the inverters to each other
  - Allocate communication address

Connect inverters to the Solar-Log™

The wiring is done using a

- Self-made cable connection using the RS485 connector.

Procedure

1. Connect the wires according to the following diagram:

Solar-Log™ Base RS485 (A) / (B)	RS485 Konnektor
Klemme	Pin
► (A) 6 oder (B) 10 (Data+)	► 2 (RS485+)
► (A) 8 oder (B) 12 GND	► 4 GND
► (A) 9 oder (B) 13 (Data-)	► 3 (RS485-)

2. Connect the RS485 connector to the inverter according to the inverter instructions.

Connect the inverters together

- Start according to the inverter's instructions.

Assign the communication address

- Start according to the inverter's instructions.

Very important!

For the connection of the devices of the respective manufacturer, please observe the manufacturer's documentation in the respective valid version.

52 JFY

52.1 SUNTREE JFY

Termination	Addressing	Interface
Resistor	Yes	RS485

Select „JFY“ during device detection.

Supported models:

- 5000TL, 5000TL+, 6000TL, 6000TL+, 8000TL, 8000TL+, 10000TL, 10000TL+, 12000TL, 12000TL+, 15000TL, 15000TL+, 17000TL, 17000TL+, 20000TL, 20000TL+, 25000TL+, 28000TL+, 30000TL, 30000TL+, 50000TL+

Overview

- Integrated interface
- Where to connect: RJ45 socket on the outside of the inverter
- 2-pin wiring
- Communication address must be allocated.
- Installation steps
  - Switch off the inverters and Solar-Log™
  - Connect inverters to the Solar-Log™
  - Connect the inverters to each other
  - Allocate communication address

Connect inverters to the Solar-Log™

The wiring is done using a

- self-made cable connection with RS485 data cable.



Caution

Risk of damage to the unit!
The Solar-Log™ also has an RJ45 socket, which must never be connected to the RJ45 socket on the inverter.

► Only connect inverters via the RS485/422 Solar-Log™ interface(s).

Procedure

1. Connect the wires according to the following diagram:

Solar-Log™ Base RS485 (A) / (B)	RJ45 inverter
Terminal	PIN
► (A) 6 or (B) 10 (Data+)	► 8 +TR
► (A) 9 or (B) 13 (Data-)	► 7 -TR

2. Insert the RJ45 plug into the RJ45 socket on the inverter.
3. If no further inverter connected, terminate the inverter:
   Insert the 120 Ω resistor into the free RJ45 socket.
4. Close the unit cover on the bottom of the inverter.

Connect the inverters to each other

- Connect using a network cable (patch cable)
- Where to connect: RJ45 sockets on the outside of the inverter.

Procedure

1. Insert the RJ45 plug into any RJ45 socket on inverter 1.
2. Insert the other end of the wire into any RJ45 socket on inverter 2.
3. Connect the other inverters to each other in the same way.
4. Terminate the last inverter.
   Insert the 120 Ω resistor into the free RJ45 socket.

Allocate communication address

- Recommendation: Continuous numbering starting with 1. (1-250)
- Setting: Using the inverter display
- Procedure: Start according to the inverter's instructions

Note

A maximum of 31 inverters can be connected per RS485 bus.

53 Kaco

53.1 Kaco - Powador

Termination	Addressing	Interface
Yes	Yes	RS485

Select „Kaco: Generic“ during device detection.

Supported models:

- Powador:
  6.0 TL, 7.8 TL, 9.0 TL, 10.0 TL3, 12.0 TL3, 14.0 TL3, 14.0 TR3, 16.0 TR3, 18.0 TL3, 18.0 TR3, 20.0 TL3, 30.0 TL3, 33.0 TL3, 36.0 TL3, 36.0 TL3 M1, 37.5 TL3, 39.0 TL3, 39.0 TL3 M1, 40.0 TL3, 48.0 TL3 Park, 60.0 TL3, 72.0 TL3 Park, 1501xi, 2002, 2500xi, 2501xi, 3000 SE, 3000xi, 3002, 3200, 3500xi, 3501xi, 3600xi, 4000xi, 4000 supreme, 4202, 4400, 4500xi, 4501xi, 5000xi, 5001xi, 5002, 5300, 5300 supreme, 5500, 6002, 6400xi, 6400 supreme, 6600, 6650xi, 6650 supreme, 7200 supreme, 7200xi, 7700, 7700 supreme, 7900, 7900 supreme, 8000 supreme, 8000xi, 8600, 8600 supreme, 9600, 9600 supreme, 25000xi, 25000xi (Park), 30000xi, 33000xi (Park), XP100-HV, XP200-HV, XP200-HV TL, XP250-HV, XP250-HV TL, XP350-HV TL, XP500-HV TL (indoor), XP550-HV TL (indoor), XP550-HV TL (outdoor), XP500-HV TL (outdoor)

Overview

- Integrated interface
- Where to connect: Terminal strip inside the inverter
- 2-pin wiring
- Communication address must be allocated
- Installation steps
  - Switch off the inverters and Solar-Log™
  - Connect inverters to the Solar-Log™
  - Connect the inverters to each other
  - Allocate communication address

Note

Instructions and a diagram for wiring Kaco Powador inverters together are in the appendix.

Connect inverters to the Solar-Log™

The wiring is done using a

- self-made, shielded 2 wire data cable.

Procedure

1. Open the inverter as shown in the inverter's instructions.
2. Pull the free wires through the wire opening in the inverter.
3. Connect the wires according to the following diagram:

Solar-Log™ Base RS485 (A) / (B)	Inverter terminal strip
Terminal	Terminal
► (A) 6 or (B) 10 (Data+)	► B
► (A) 9 or (B) 13 (Data-)	► A

4. If no further inverter connected, terminate the inverter:
   Depending on the model, either via a DIP switch or a 330 Ohm cable bridge (see inverter manufacturer's manual).
5. Close the inverter if no other inverters are to be connected.

Connect the inverters to each other

- Connect using a 2 wire, shielded data cable.
- Where to connect: Terminal strip inside the inverter.
- Procedure: According to the inverter manual.

The RS485 connections on the terminal strip are each double connections so that the wiring can be continued to the next inverter.

Procedure

1. Connect the data cable to the free terminals A and B of inverter 1.
2. Insert the other end of the cable into terminals A and B of inverter 2.
3. Connect the other inverters to each other in the same way.
4. Terminate the last inverter.
   Depending on the model, either via a DIP switch or a 330 Ohm cable bridge (see inverter manufacturer's manual).
5. Close inverters.

Allocate communication address

- Recommendation: Continuous numbering starting with 1.
- Setting: Using the inverter display
- Procedure: Start according to the inverter's instructions

Note

The 25000xi - 33000xi Kaco inverter models are shown as 3 independent inverters in the Solar-Log™. If, for example, such inverters are available, give them addresses 1 and 2. In the Solar-Log™ the inverters will be shown internally as 1.1 / 1.2 - 2.1 / 2.2 etc.

Note

A maximum of 32 inverters can be connected per RS485 bus.

Procedure for model XP100-HV:

1. Open the inverter as shown in the inverter's instructions.
2. Pull the free wires through the wire opening in the inverter.
3. Connect the wires according to the following diagram:

Solar-Log™ Base RS485 (A) / (B)	Inverter terminal strip
Terminal	Terminal
► (A) 6 or (B) 10 (Data+)	► 3-1 RS485A2
► (A) 9 or (B) 13 (Data-)	► 3-2 RS485B2

4. If no further inverter connected, terminate the inverter according to the inverter manufacturer's instructions.
5. Close the inverter if no other inverters are to be connected.

Connect the inverters to each other

- Connect using a 2 wire, shielded data cable.
- Where to connect: Terminal strip inside the inverter
- Procedure: According to the inverter manual.



Note

Usage via RS485 is deactivated in the basic function and must be activated beforehand via the configuration. Please follow the inverter manufacturer's instructions.

Procedure for the following models:

- XP200-HV, XP200-HV TL, XP250-HV, XP250-HV TL, XP350-HV TL

1. Open the inverter as shown in the inverter's instructions.
2. Pull the free wires through the wire opening in the inverter.
3. Connect the wires according to the following diagram:

Solar-Log™ Base RS485 (A) / (B)	Inverter terminal strip
Terminal	Terminal
► (A) 6 or (B) 10 (Data+)	► 8 A
► (A) 8 or (B) 12 GND	► 7 GND
► (A) 9 or (B) 13 (Data-)	► 5 B

4. If no further inverter connected, terminate the inverter:
   Via a 120 Ohm cable bridge (see inverter manufacturer's manual).
5. Close the inverter if no other inverters are to be connected.

Procedure for the following models:

- P500-HV TL (indoor), XP550-HV TL (indoor), XP550-HV TL (outdoor), XP500-HV TL (outdoor)

1. Open the inverter as shown in the inverter's instructions.
2. Pull the free wires through the wire opening in the inverter.
3. Connect the wires according to the following diagram:

Solar-Log™ Base RS485 (A) / (B)	Inverter terminal strip
Terminal	Terminal
► (A) 6 or (B) 10 (Data+)	► 5c A
► (A) 8 or (B) 12 GND	► 7d GND
► (A) 9 or (B) 13 (Data-)	► 5d B

4. If no further inverter connected, terminate the inverter:
   Via a 120 Ohm cable bridge (see inverter manufacturer's manual).
5. Close the inverter if no other inverters are to be connected.

Connect the inverters to each other

- Connect using a 3 wire, shielded data cable.
- Where to connect: Terminal strip inside the inverter
- Procedure: According to the inverter manual.

Very important!

For the connection of the devices of the respective manufacturer, please observe the manufacturer's documentation in the respective valid version.

53.2 Kaco – PVI BluePlanet

Termination	Addressing	Interface
Yes	Yes	RS485

Select “Kaco: Generic“ during device detection.

Supported models:

- BluePlanet:
  2.0 TL1, 2.6 TL1, 3.0 TL1, 3.5 TL1, 3.7 TL1, 4.0 TL1, 4.6 TL1, 5.0 TL1, 5.0 TL3, 6.5 TL3, 7.5 TL3, 9.0 TL3, 10.0 TL3, 15.0 TL3, 20.0 TL3 (INT), 29.0 TL3 LV, 32.0 TL3 M1 OD, 32.0 TL3 M3 OD, 40.0 TL3 M1 OD, 40.0 TL3 M3 OD, 50.0 TL3, 50.0 TL3 M1 OD, 50.0 TL3 M3 OD, 50.0 TL3 WM, 60.0 TL3, 87 TL3, 92 TL3, 105 TL3, 110 TL3, 110 TL3-US, 125 TL3, 125 TL3-US, 137 TL3, 150 TL3, 155 TL3, 165 TL3, 750 TL3, 875 TL3, 1000 TL3, 2901xi, 3601xi, 1502xi/x, 2502xi/x, 3502xi/x, 5002xi/x, 6400M, 6400xi (supreme), 7000xi (supreme), 7600M, 7600xi (supreme), XP 10U-H4, XP 10U-H4-PSD, XP 10U-H6, XP 10U-H6-PSD, XP83U-H6, XP90U-H6, XP 100U-H2, XP 100U-H4, XP100U-H6

Overview

- The Solar-Log™ only works with Kaco Blue Planet inverters that have an RS485 interface. The RS232 interface is not supported.

RS232 models: RS485 interface can be retrofitted by the manufacturer.
RS485 models: Integrated interface.

- Where to connect: Terminal strip inside the inverter.
- 2-pin wiring.
- Communication address must be allocated.
- Installation steps:
  - Switch off the inverters and Solar-Log™.
  - Connect inverters to the Solar-Log™.
  - Connect the inverters to each other.
  - Allocate communication address.

Connect inverters to the Solar-Log™

The wiring is done using a

- self-made, shielded 2 wire data cable.

Procedure

1. Open the inverter as shown in the inverter's instructions.
2. Pull the free wires through the wire opening in the inverter.
3. Connect the wires according to the following diagram:

Solar-Log™ Base RS485 (A) / (B)	Inverter terminal strip
Terminal	Terminal
► (A) 6 or (B) 10 (Data+)	► B
► (A) 9 or (B) 13 (Data-)	► A

4. If no further inverter connected, terminate the inverter:
   In the inverter connect the free terminal A to terminal B using the supplied 330 Ω terminating resistor.
5. Close the inverter if no other inverters are to be connected.

Connect the inverters to each other

- Connect using a 2 wire, shielded data cable.
- Where to connect: Terminal strip inside the inverter.

The RS485 connections on the terminal strip are each double connections so that the wiring can be continued to the next inverter.

Procedure

1. Open the inverter as shown in the inverter's instructions.
2. Connect the data cable to the free terminals A and B of inverter 1.
3. Insert the other end of the cable into terminals A and B of inverter 2.
4. Connect the other inverters to each other in the same way.
5. Terminate the last inverter.
   Connect the free terminal A to terminal B using the supplied 330 Ω terminating resistor.
6. Close inverters.

Allocate communication address

- Recommendation: Continuous numbering starting with 1.
- Setting: Using the DIP switch inside the inverter.
- Procedure: Start according to the inverter's instructions



Note

A maximum of 32 inverters can be connected per RS485 bus.

53.3 Kaco – NX3

Termination	Addressing	Interface
Yes	Yes	RS485 or WLAN stick (dongle)

Select “Kaco: Sunspec” via Ethernet or “Kaco: Generic” via RS485 during device detection.

Supported models:

- KACO BluePlanet: 3.0 NX3 M2, 5.0 NX3 M2, 8.0 NX3 M2, 10.0 NX3 M2, 12.0 NX3 M2, 15.0 NX3 M2, 20.0 NX3 M2, 25.0 NX3 M2, 30.0 NX3 M2, 33.0 NX3 M2
- KACO BluePlanet: 50 NX3 M5, 60 NX3 M5

Overview and description RS485

- Where to connect: RJ45 connector at the bottom of the inverter.
- 2-pin wiring.
- Communication address must be allocated.
- Installation steps:
  - Switch off the inverters and Solar-Log™.
  - Connect inverters to the Solar-Log™.
  - Connect the inverters to each other.
  - Allocate communication address.

Connect inverters to the Solar-Log™

The wiring is done using a

- self-made, shielded RS485 data cable with RJ45 connector.

Procedure:

1. Connect the wires according to the following diagram:

Solar-Log™ Base RS485 (A) / (B)	RJ45 inverter
Terminal	Terminal
► (A) 6 or (B) 10 (Data+)	► 1 TX_RS485A
► (A) 9 or (B) 13 (Data-)	► 2 TX_RS485B

2. If no other inverter is connected, terminate the inverter according to the inverter instructions (see note below).

Connect the inverters to each other

- Wiring via 2-pin shielded data cable with RJ45 connector.
- Where to connect: RJ45 connector at the bottom of the inverter.
- See inverter instructions.

Wiring at KACO blueplanet: 50 NX3 M5 & 60 NX3 M5:

3. Connect the wires according to the following diagram:

Solar-Log™ Base RS485 (A) / (B)	AC/COM connection - Inverter
Terminal	Terminal
► (A) 6 or (B) 10 (Data+)	► A+
► (A) 9 or (B) 13 (Data-)	► B-

4. If no other inverter is connected, terminate the inverter according to the inverter instructions (see note below).

Connect the inverters to each other for models 50 NX3 M5 & 60 NX3 M5:

- Wiring via 2-core shielded data cable.
- Where to connect: AC/COM connection at the bottom of the inverter.
- See inverter instructions.

Allocate communication address

- Is done with the app from KACO. See manufacturer's instructions.

Note

Each inverter must be allocated a specific IP address.
If more than 5 devices are used or the distance exceeds 100 m, the bus must be terminated with a configured RJ45 connector with integrated 120 Ohm terminating resistor.
The maximum bus length is 1000 m.

Note

Settings, maintenance and commissioning are performed using the KACO app.
The name of the app is: „KACO NX Setup".

Overview and description WLAN stick (dongle)

- Interface at the bottom of the inverter.
- Connect the inverter to the router via a WLAN stick (dongle) (see manufacturer's manual).
- Wire Solar-Log™ Base with the router.
- Check IP configuration and configure manually if necessary.

Connect inverter to Solar-Log™

The connection is made via

- WLAN stick (dongle) and
- Wifi Ethernet router.

Connecting inverters to each other

See the manufacturer's manual.

Assign IP address

- A static/fixed IP address must be assigned. (See inverter manual)
- Please select an IP address from the same class C subnet of the Solar-Log™.
  Example: Solar-Log™ has 192.168.178.49
  In this case, the inverters must have an IP address from the range 192.168.178.xxx (xxx stands for a number between 1 - 254).
- Procedure: According to the inverter manual.

Detection via the Solar-Log™ WEB interface

- For detection on the Solar-Log™, select the device class under the menu Configuration | Device | Definition | Interface with the plus symbol and then select Kaco as the manufacturer and Generic or Sunspec. Confirm your selection with OK.
- Save your selections and then start the Device Detection under Configuration | Device | Detection and start the device detection.



Note

To ensure communication with the Solar-Log™ Base, the following settings must be made on the inverter:

- The „Modbus TCP IP Server“ must be activated under „Monitoring & Control“.
- under „Inverter values & settings“ the „External write access“ must be activated.

53.4 Kaco – KACO NX3 100 M8 / 125 M10

Termination	Addressing	Interface
No	-*	Ethernet

Select “Kaco: Sunspec“ during device detection.

Overview

- Integrated interface.
- Where to connect: 3 x LAN interfaces at the bottom inside the inverter.
- LAN interfaces:
  *2 x LAN side by side LAN 1 and LAN 2 these have an internal switch and require an IP address via DHCP.
  1 x LAN (LAN 3 - CON700) This interface is used to configure the inverter and has the static IP address 169.254.1.1 (Direct connection via LAN cable to the laptop. See manufacturer‘s instructions).
- Wiring via network cable (patch cable) and Ethernet router or switch. (Only applies to LAN interfaces - LAN 1 or LAN 2)
- *Communication address can be assigned.
- Installation steps:
  - Switch off the inverter and Solar-Log™.
  - Connect the inverter to the network (RJ45).
  - Connect Solar-Log™ to the network (RJ45).
  - Assign a static/fixed IP address if necessary.

Connect inverters to the Solar-Log™

The wiring is done using a

- network cable (patch cable) and the
- Ethernet router or switch.

Connect the inverters to each other

The inverters are connected to each other via the RJ45 interface located at the bottom inside the inverter. Establish the connection according to the inverter instructions.

*IP address assignment via LAN interfaces 1 or 2

- A static/fixed IP address can be assigned. However, DHCP must be enabled for the initial configuration. (See the inverter instructions)
- Please select an IP address from the same class C subnet of the Solar-Log™.
  Example: Solar-Log™ has 192.168.178.49.
  In this case, the inverters must have an IP address from the range 192.168.178.xxx (xxx stands for a number between 1 - 254).
- Procedure: According to the instructions for the inverter.

Detection via the Solar-Log™ WEB interface

- For detection on the Solar-Log™, select the device class under the menu Configuration | Device | Definition | Interface with the plus symbol and then select Kaco as the manufacturer and Generic or Sunspec. Confirm your selection with OK.
- Save your selections and then start the Device Detection under Configuration | Device | Detection and start the device detection.

Note

The settings, maintenance, and commissioning are carried out either using the KACO app or via the web browser using a direct connection from the LAN interface “CON700” to the laptop.
The name of the app is: “KACO NX Setup.”
(See the instructions provided by the inverter manufacturer)

Note about Modbus/TCP

Modbus/TCP must be enabled in order to use it. The following steps are necessary:

- Go to the user interface of the inverter.
- Go to the Modbus TCP/UDP activation entry under Configuration - Communication - Ethernet - Modbus TCP/UPD and enable it.
- Enable write protection if necessary.
- Set the port for access (default: 502).

This activates access via Modbus / TCP. (Be sure to follow the manufacturer‘s instructions.)

53.5 Kaco – BluePlanet via Ethernet

Termination	Addressing	Interface
No	-*	Ethernet

Select “Kaco: Sunspec“ during device detection.

Supported models:

- 29.0 TL3 LV, 50.0 TL3, 60.0 TL3, 87 TL3, 92 TL3, 105 TL3, 110 TL3-US, 125 TL3, 125 TL3-US, 137 TL3, 150 TL3, 155 TL3, 165 TL3

Overview

- Integrated interface.
- Connected using network cable (patch cable) and Ethernet router.
- Communication address can be assigned (DHCP is set by default).
- Installation steps:
  - Switch off the inverter and Solar-Log™.
  - Connect the inverter to the network (RJ45).
  - Connect Solar-Log™ to the network (RJ45).

Connect inverters to the Solar-Log™

The wiring is done using a

- network cable (patch cable) and the
- Ethernet router or switch.

Assign IP address

- An IP address can be assigned via DHCP as well as via static/fixed IP address via the web interface of the inverter (see inverter instructions).
- Please select an IP address from the same class C subnet of the Solar-Log™.
  Example: Solar-Log™ has 192.168.178.49.
  In this case, the inverters must have an IP address from the range 192.168.178.xxx (xxx stands for a number between 1 - 254).
- Procedure: According to the instructions for the inverter.

Detection via the Solar-Log™ WEB interface

- For detection on the Solar-Log™, select the device class under the menu Configuration | Device | Definition | Interface with the plus symbol and then select Kaco as the manufacturer and Sunspec as the type. Confirm your selection with OK.
- Save your selections and then start the Device Detection under Configuration | Device | Detection and start the device detection.

Note

An IP address is assigned via the inverter’s web interface. The device’s default IP address is:
http:// 192.168.1.1
Then deactivate DHCP in the menu and assign the IP address.
Please be sure to follow the manufacturer’s instructions in all areas!

Very important! Note from the manufacturer!

“Under no circumstances should you plug the Ethernet cable into the unshielded RJ45 socket labeled J200, as this will usually result in damage to the circuit board!”

Very important!

For the connection of the devices of the respective manufacturer, please observe the manufacturer‘s documentation in the respective valid version.

54 Kehua

54.1 Kehua (Single phase)

Termination	Addressing	Interface
No	Yes	RS485

Select „Kehua“ during device detection.

Supported models:

- SPI3000-B2, SPI3600-B2, SPI4000-B2, SPI4600-B2, SPI5000-B2, SPI6000-B2, SPI7000-B2, SPI8000-B2, KF-SPI3000-B2, KF-SPI3600-B2, KF-SPI4000-B2, KF-SPI4600-B2, KF-SPI5000-B2, KF-SPI6000-B2, KF-SPI7000-B2, KF-SPI8000-B2

Overview

- Integrated interface.
- Where to connect:
  - Terminal strip inside the inverter.
  - Round sockets on the outside of the inverter.
- 2-pin wiring.
- Communication address must be allocated.
- Installation steps:
  - Switch off the inverters and Solar-Log™.
  - Connect inverters to the Solar-Log™.
  - Connect the inverters to each other.
  - Allocate communication address.

Connect inverters to the Solar-Log™

The wiring is done using a

- self-made, shielded 2 wire data cable.

Procedure

1. Open the inverter as shown in the inverter‘s instructions.
2. If you are making the cable yourself, connect the wires as shown in the following diagram

Solar-Log™ Base RS485 (A) / (B)	Terminal strip inside the inverter
Terminal	RS485 Terminal
► (A) 6 or (B) 10 (Data+)	► A/3
► (A) 9 or (B) 13 (Data-)	► B/4

3. Close the inverter if no other inverters are to be connected.

Connect the inverters to each other

- Where to connect: Terminal strip inside the inverter.
- 2-pin wiring.
- Wiring according to inverter instructions.

Alternative procedure with round socket:

Connect inverters to the Solar-Log™

The wiring is done using a

- self-made, shielded 2 wire data cable with round plug.

Procedure

1. If you are making the cable yourself, connect the wires as shown in the following diagram:

Solar-Log™ Base RS485 (A) / (B)	Inverter round socket
Terminal	PIN
► (A) 6 or (B) 10 (Data+)	► 3
► (A) 9 or (B) 13 (Data-)	► 4

2. Insert the round plug into any COM round socket on the inverter.

Connect the inverters to each other

- Wiring using 2 pin cable with round plugs.
- Where to connect: Round sockets on the outside of the inverter.

Procedure

1. Insert the round plug into any round socket on inverter 1.
2. Insert the other end of the cable into any round socket on inverter 2.
3. Connect the other inverters to each other in the same way.

Allocate communication address

- Recommendation: Continuous numbering starting with 1.
- Address range: 1 - 247.
- Setting: According to inverter instructions.
- Procedure: Start according to the inverter's instructions.

54.2 Kehua (3-phase)

Termination	Adressing	Interface
Dip switch	Yes	RS485

Select „Kehua“ during device detection.

Supported models:

- SPI8K-B, SPI10K-B, SPI12K-B, SPI15K-B, SPI17K-B, SPI20K-B, SPI30K-B, SPI33K-B, SPI36K-B, SPI40K-B, SPI40K-BHV, SPI50K-B, SPI50K-BHV, SPI60K-B, SPI60K-BHV, SPI70K-BHV, SPI80K-BHV, KF-SPI8K-B, KF-SPI10K-B, KF-SPI12K-B, KF-SPI15K-B, KF-SPI17K-B, KF-SPI20K-B, KF-SPI30K-B, KF-SPI33K-B, KF-SPI36K-B, KF-SPI40K-B, KF-SPI40K-BHV, KF-SPI50K-B, KF-SPI50K-BHV, KF-SPI60K-B, KF-SPI60K-BHV, KF-SPI70K-BHV, KF-SPI80K-BHV

Overview

- Integrated interface.
- Where to connect:
  - Terminal strip inside the inverter.
  - Round sockets on the outside of the inverter.
- 2-pin wiring.
- Communication address must be allocated.
- Installation steps:
  - Switch off the inverters and Solar-Log™.
  - Connect inverters to the Solar-Log™.
  - Connect the inverters to each other.
  - Allocate communication address.

Connect inverters to the Solar-Log™

The wiring is done using a

- self-made, shielded 2 wire data cable.

Procedure

1. Open the inverter as shown in the inverter’s instructions.
2. If you are making the cable yourself, connect the wires as shown in the following diagram

Solar-Log™ Base RS485 (A) / (B)	Terminal strip inside the inverter
Terminal	RS485 Terminal
► (A) 6 or (B) 10 (Data+)	► A/3
► (A) 9 or (B) 13 (Data-)	► B/4

3. If no further inverter is connected, terminate the inverter according to the instructions for the inverter.
4. Close the inverter if no other inverters are to be connected.

Connect the inverters to each other

- Where to connect: Terminal strip inside the inverter.
- 2-pin wiring.
- Wiring according to inverter instructions.

Alternative procedure with round socket:

Connect inverters to the Solar-Log™

The wiring is done using a

- self-made, shielded 2 wire data cable with round plug.

Procedure

1. If you are making the cable yourself, connect the wires as shown in the following diagram:

Solar-Log™ Base RS485 (A) / (B)	Inverter round socket
Terminal	PIN
► (A) 6 or (B) 10 (Data+)	► 3
► (A) 9 or (B) 13 (Data-)	► 4

2. If no further inverter is connected, terminate the inverter according to the instructions for the inverter.
3. Insert the round plug into any COM round socket on the inverter.

Connect the inverters to each other

- Wiring using 2 pin cable with round plugs.
- Where to connect: Round sockets on the outside of the inverter.

Procedure

1. Insert the round plug into any round socket on inverter 1.
2. Insert the other end of the cable into any round socket on inverter 2.
3. Connect the other inverters to each other in the same way.
4. Insert the terminal block connector into the Solar-Log™ RS485 socket.

Allocate communication address

- Recommendation: Continuous numbering starting with 1.
- Address range: 1 - 247.
- Setting: According to inverter instructions.
- Procedure: Start according to the inverter‘s instructions.

54.3 Kehua - SPI series

Termination	Adressing	Interface
-*	Yes	RS485

Select „Kehua“ during device detection.

Supported models:

- SPI175K-B-H, SPI200K-B-H, SPI225K-B-H, SPI250K-B-H, SPI100K-B, SPI125K-B, SPI136K-BHV

Overview

- Integrated interface.
- Where to connect: Wiring box on the inverter.
- 2-pin wiring.
- Communication address must be allocated.
- Installation steps:
  - Switch off the inverters and Solar-Log™.
  - Connect inverters to the Solar-Log™.
  - Connect the inverters to each other.
  - Allocate communication address.

Connect inverters to the Solar-Log™

The wiring is done using a

- self-made, shielded 2 wire data cable.

Procedure

1. Open the inverter as shown in the inverter‘s instructions.
2. If you are making the cable yourself, connect the wires as shown in the following diagram:

Solar-Log™ Base RS485 (A) / (B)	Terminal strip inside the inverter
Terminal	RS485 Terminal
► (A) 6 or (B) 10 (Data+)	► +
► (A) 9 or (B) 13 (Data-)	► -

3. If no further inverter is connected, terminate the inverter according to the instructions for the inverter*.
4. Close the inverter if no other inverters are to be connected.

Connect the inverters to each other

- Where to connect: Terminal strip inside the inverter.
- 2-pin wiring.
- Wiring according to inverter instructions.

Note

The baud rate of the inverter must be set via the Kehua monitoring software WiseEnergy (see the WiseEnergy user manual). The default baud rate is 9600.

The communication address of the inverter is set in binary mode via the selector switch SW1 on the communication board, e.g. if the selector switch SW1 is set to „000001 (from left to right, ON is 1, OFF is 0)“, this means that the communication address of the inverter is set to „000001“.
If in doubt, please contact the manufacturer.

Very important!

For the connection of the devices of the respective manufacturer, please observe the manufacturer‘s documentation in the respective valid version.

55 KLNE

55.1 KLNE (Solartec and Sunteams)

Termination	Addressing	Interface
Yes	Yes	RS485

Select „KLNE“ during device detection.

Unterstützte Modelle:

- Solartec:
  1500, 2000, 2500, 3000, 3600, 4000, 4600, 5000
- Solartec D:
  2500, 3000, 3600, 4000, 4600, 5000, 10000, 12000, 15000, 20000
- Sunteams:
  1500, 2000, 2500, 3000, 3600, 4000, 4600, 5000, 6000, 8000, 10000, 12000, 15000, 17000, 20000

Overview

- Integrated interface.
- Where to connect: 4-pin round socket on the button of the device.
- 2-pin wiring.
- Communication address must be allocated.
- Installation steps:
  - Switch off the inverters and Solar-Log™.
  - Connect inverters to the Solar-Log™.
  - Connect the inverters to each other.
  - Allocate communication addresses.

Connect inverters to the Solar-Log™

The wiring is done using a

- self-made cable connection.
- Where to connect: 4-pin round socket on the button of the device.

Procedure

1. If you are making the cable yourself, connect the wires as shown in the following diagram:

Solar-Log™ Base RS485 (A) / (B)	X4 socket inverter
Terminal	PIN
► (A) 6 or (B) 10 (Data+)	► 4 - Data+
► (A) 9 or (B) 13 (Data-)	► 2 - Data-

2. If no further inverter is connected, terminate the inverter according to the instructions for the inverter.

Connect the inverters to each other

- Where to connect: 4-pin round socket on the button of the device.

Procedure

1. Unscrew the side cover as shown in the inverter's instructions.
2. If you are making the cable yourself, connect the wires as shown in the following diagram:

Solar-Log™ Base RS485 (A) / (B)	X4 socket inverter
Terminal	PIN
► (A) 6 or (B) 10 (Data+)	► 4 - Data+
► (A) 9 or (B) 13 (Data-)	► 2 - Data-

3. Connect the Solar-Log™ cable to socket A on the first inverter.
4. According to the same wiring diagram, connect socket B on the first inverter to socket A on the second inverter using the following diagram.

X4 socket inverter 1	X4 socket inverter 2
Terminal	PIN
► 2	► 2 - Data+
► 4	► 4 - Data-

5. Connect the other inverters to each other in the same way.
6. Terminate the last inverter in accordance with the inverter instructions.



Note

According to the manufacturer's specifications, a maximum of 31 devices can be connected per RS485 bus.

56 Kostal and Solar-Fabrik

56.1 Kostal Piko and Solar-Fabrik Inverter Convert T (RS485)

Termination	Addressing	Interface
Yes	Yes	RS485

Select „Kostal: Standard“ during device detection.

Supported models:

- Piko:
  3, 3.6, 4.2, 4.6, 5.5, 7.0, 8.3, 8.5, 10, 10.1, 12, 15, 17, 20, 36 EPC
- Piko BA:
  6, 8, 10
- Piko NG:
  3.0, 4.2, 4.6, 5.5, 7.0, 8.5, 10, 12, 15, 17, 20
- Convert:
  4T, 6T, 8T, 10T

Overview

- Integrated interface.
- Where to connect: Terminal strip inside the inverter.
- 3-pin wiring.
- Communication address must be allocated.
- Multi-string technology.

Piko/Convert inverters are fitted with several MPP trackers: Each string input is monitored separately and ideally adjusted to the connected modules.
Depending on any parallel connections inside the inverter the Solar-Log™ can read the data from up to 3 individual strings.
During the inverter detection, the Solar-Log™ automatically detects how many MPP trackers are active; only the active MPP trackers are displayed. The inverter must be feeding data in for successful detection.

- Installation steps:
  - Switch off the inverters and Solar-Log™.
  - Connect inverters to the Solar-Log™.
  - Connect the inverters to each other.
  - Allocate communication address.

Connect inverters to the Solar-Log™

The wiring is done using a

- self-made, shielded 3 wire data cable.

Procedure

1. Open the inverter as shown in the inverter‘s instructions.
2. Pull the free wires through the wire opening in the inverter.
3. If you are making the cable yourself, connect the wires as shown in the following diagram:

Solar-Log™ Base RS485 (A) / (B)	RS485 inverter socket
Terminal	PIN
► (A) 6 or (B) 10 (Data+)	► A
► (A) 8 or (B) 12 GND	► GND
► (A) 9 or (B) 13 (Data-)	► B

4. If no further inverter is connected, terminate the inverter according to the instructions for the inverter.
5. Close the inverter if no other inverters are to be connected.

Connect the inverters to each other

- Connect using a 3 wire, shielded data cable.
- Where to connect: Terminal strip inside the inverter.

Procedure

1. Open the inverter as shown in the inverter's instructions.
2. Connect terminals A, B and GND of inverter 1 to the corresponding terminals on inverter 2.
3. Connect the other inverters to each other in the same way.
4. Terminate the last inverter according to the inverter instructions.
5. Close inverters.

Allocate communication address

- Recommendation: Continuous numbering starting with 1.
- Setting: Using the software that came with the inverter.
- Procedure: Start according to the inverter's instructions

56.2 Kostal Piko CI - Modbus

Termination	Addressing	Interface
No Yes	Yes -*	Ethernet RS485

Select „Kostal: Modbus“ during device detection.

Supported models:

- CI-30, CI-50, CI-60, CI-100

Overview

- Integrated interface.
- Connected using network cable (patch cable) and Ethernet router or switch
- Communication address must be allocated
- Installation steps
  - Assign a static IP address
  - Switch off the inverters and Solar-Log™
  - Connect inverters to the Solar-Log™ (RJ45)
  - Connect the inverters to each other (RJ45).

Connect inverters to the Solar-Log™

The wiring is done using a

- network cable (patch cable) and the
- Ethernet router or switch.

Connect the inverters to each other

The inverters are connected together using
the RJ45 interface and, if needed, a router or switch.
Connection setup according to the inverter‘s instructions.

Assigning IP addresses

- A static/fixed IP address must be assigned. (See instructions for the inverter)
- Please select an IP address with the same class C subnet as the Solar-Log™.
  For example: The Solar-Log™ has the IP address 192.168.178.49.
  The inverter in this case has to have a free IP address in the same range (from 192.168.178.1 to 192.168.178.254).
- Procedure: Start according to the inverter‘s instructions.

Detection via the Solar-Log™ WEB interface

- For detection on the Solar-Log™, select the device class under the menu Configuration | Device | Definition | Interface with the plus symbol and then select Kostal as the manufacturer and Piko CI as the type. Confirm your selection with OK.
- Save your selections and then start the Device Detection under Configuration | Device | Detection and start the device detection.

Connection via RS485:

Overview

- Integrated interface.
- Where to connect: COM2 interface inside the inverter.
- Where to connect: COM5 interface inside the inverter (Kostal Piko CI-100).
- 2-pin wiring.
- Communication address: *See the manufacturer's operating instructions / manual.
- Installation steps:
  - Switch off the inverters and Solar-Log™.
  - Connect inverters to the Solar-Log™.
  - Connect the inverters to each other.

Connect inverters to the Solar-Log™

The wiring is done using a

- self-made, shielded 2 wire data cable.

Procedure

1. Open the inverter as shown in the inverter's instructions.
2. If you are making the cable yourself, connect the wires as shown in the following diagram:

Solar-Log™ Base RS485 (A) / (B)	RS485 COM2 strip of the inverter	RS485 COM5 strip of the inverter for CI-100
Terminal	Pin	Pin
► (A) 6 or (B) 10 (Data+)	► 8 RS485 A (IN)	► 18 RS485_A_IN
► (A) 9 or (B) 13 (Data-)	► 7 RS485 B (IN)	► 17 RS485_B_IN

3. If no further inverter is connected, terminate the inverter according to the instructions for the inverter.
4. Close the inverter if no other inverter is to be connected.

Connect the inverters to each other

- Where to connect: COM2 interface or Com5 interface inside the inverter.
- 2-pin wiring.
- Wiring according to the inverter instructions.

Very important!

To ensure communication with the Solar-Log, the parameter "Stop bit" must be set to the value 2 under the menu item "Modbus RTU settings" in the Kostal Piko CI app.

Note!

Settings of the inverter are made via the Kostal Piko CI app - it is essential to follow the manufacturer's instructions!

56.3 Kostal Piko CI G2 series

Termination	Addressing	Interface
No Yes	Yes -*	Ethernet RS485

Select „Kostal: Modbus“ during device detection.

Supported models:

- CI-30 G2, CI-50 G2

Overview

- Integrated interface.
- Connected using network cable (patch cable) and Ethernet router or switch
- Communication address must be allocated
- Installation steps
  - Assign a static IP address
  - Switch off the inverters and Solar-Log™
  - Connect inverters to the Solar-Log™ (RJ45)
  - Connect the inverters to each other (RJ45).

Connect inverters to the Solar-Log™

The wiring is done using a

- network cable (patch cable) and the
- Ethernet router or switch.

Connect the inverters to each other

The inverters are connected together using
the RJ45 interface and, if needed, a router or switch.
Connection setup according to the inverter's instructions.

Assigning IP addresses

- A static/fixed IP address must be assigned. (See instructions for the inverter)
- Please select an IP address with the same class C subnet as the Solar-Log™.
  For example: The Solar-Log™ has the IP address 192.168.178.49.
  The inverter in this case has to have a free IP address in the same range (from 192.168.178.1 to 192.168.178.254).
- Procedure: Start according to the inverter's instructions.

Detection via the Solar-Log™ WEB interface

- For detection on the Solar-Log™, select the device class under the menu Configuration | Device | Definition | Interface with the plus symbol and then select Kostal as the manufacturer and Piko CI as the type. Confirm your selection with OK.
- Save your selections and then start the Device Detection under Configuration | Device | Detection and start the device detection.

Connection via RS485:

Overview

- Integrated interface.
- Where to connect: COM4 interface inside the inverter.
- 2-pin wiring.
- Communication address: *See the manufacturer's operating instructions / manual.
- Installation steps:
  - Switch off the inverters and Solar-Log™.
  - Connect inverters to the Solar-Log™.
  - Connect the inverters to each other.

Connect inverters to the Solar-Log™

The wiring is done using a

- self-made, shielded 2 wire data cable.

Procedure

1. Open the inverter as shown in the inverter's instructions.
2. If you are making the cable yourself, connect the wires as shown in the following diagram:

Solar-Log™ Base RS485 (A) / (B)	RS485 COM4 interface of the inverter
Terminal	Pin
► (A) 6 or (B) 10 (Data+)	► 18 RS485_A_IN
► (A) 9 or (B) 13 (Data-)	► 17 RS485_B_IN

3. If no further inverter is connected, terminate the inverter according to the instructions for the inverter.
4. Close the inverter if no other inverter is to be connected.

Connect the inverters to each other

- Where to connect: COM4 interface inside the inverter.
- 2-pin wiring.
- Wiring according to the inverter instructions.

Very important!

To ensure communication with the Solar-Log, the parameter "Stop bit" must be set to the value 2 under the menu item "Modbus RTU settings" in the Kostal Piko CI app.

Note!

Settings of the inverter are made via the Kostal Piko CI app - it is essential to follow the manufacturer's instructions!

56.4 Kostal Piko MP

Termination	Addressing	Interface
Connection plug	Yes	RS485

Select „Kostal: Piko MP“ during device detection.

Supported models:

- Kostal Piko 1.5 MP, Kostal Piko 2.0 MP, Kostal Piko 2.5 MP, Kostal Piko 3.0 MP, Kostal Piko 3.6 MP, Kostal Piko 4.2 MP

Overview

- Integrated interface.
- Where to connect: RJ45 socket, bottom of the housing of the inverter.
- 3-pin wiring.
- Communication address must be allocated.
- Installation steps:
  - Switch off the inverters and Solar-Log™.
  - Connect inverters to the Solar-Log™.
  - Connect the inverters to each other.
  - Allocate communication address (address range 1-99).

Connect inverters to the Solar-Log™

The wiring is done using a

- self-made RS485 data cable with RJ45 plug.



Caution

Risk of damage to the unit!
The Solar-Log™ also has an RJ45 socket, which must never be connected to the RJ45 socket on the inverter.

► Only connect inverters via the RS485/422 Solar-Log™ interface(s).

Procedure

1. If you are making the cable yourself, connect the wires as shown in the following diagram:

Solar-Log™ Base RS485 (A) / (B)	RJ45 inverter
Terminal	PIN
► (A) 6 or (B) 10 (Data+)	► 1
► (A) 8 or (B) 12 GND	► 8
► (A) 9 or (B) 13 (Data-)	► 2

2. Insert the RJ45 plug into any RJ45 socket on the first inverter.
3. If no further inverter connected, terminate the inverter:
   On the inverter insert the connection plug into the free RJ45 socket.

Connect the inverters to each other

- Connect using the RS485 data cable with RJ45 plug;
  Connection cables between the inverters are supplied with the inverters. Use these.
- Where to connect: RJ45 socket on the outside of the inverter

Procedure

1. Insert the RJ45 plug into the free RJ45 socket on the first inverter.
2. Insert the other end of the wire into any RJ45 socket on inverter 2.
3. Connect the other inverters to each other in the same way.
4. Terminate the last inverter.
   Insert the connection plug into the free RJ45 socket.

Allocate communication address

1. Recommendation: Continuous numbering starting with 1 (address range 1-99).
2. Setting: via display of the inverter.
3. Procedure: Start according to the inverter‘s instructions

56.5 Kostal Piko IQ

Termination	Addressing	Interface
No	Yes	Ethernet

Select „Kostal: Sunspec“ during device detection.

Supported models:

- 4.2, 5.5, 7.0, 8.5, 10

Overview

- Integrated interface.
- Connected using network cable (patch cable) and Ethernet router or switch
- Communication address must be allocated
- Installation steps
  - Assign a static IP address
  - Switch off the inverters and Solar-Log™
  - Connect inverters to the Solar-Log™ (RJ45)
  - Connect the inverters to each other (RJ45).

Connect inverters to the Solar-Log™

The wiring is done using a

- network cable (patch cable) and the
- Ethernet router or switch.

Connect the inverters to each other

The inverters are connected together using
the RJ45 interface and, if needed, a router or switch.
Connection setup according to the inverter‘s instructions.

Assigning IP addresses

- A static IP address has to be assigned to the inverter via the display.
- Please select an IP address with the same class C subnet as the Solar-Log™.
  For example: The Solar-Log™ has the IP address 192.168.178.49.
  The inverter in this case has to have a free IP address in the same range (from 192.168.178.1 to 192.168.178.254).
- Procedure: Start according to the inverter‘s instructions.

Detection via the Solar-Log™ WEB interface

- For detection on the Solar-Log™, select the device class under the menu Configuration | Device | Definition | Interface with the plus symbol and then select Kostal as the manufacturer and Sunspec as the type. Confirm your selection with OK.
- Save your selections and then start the Device Detection under Configuration | Device | Detection and start the device detection.

Note!

„Modbus TCP“ has to be activated to be able to communicate with the Solar-Log™.
This is done from the inverter‘s web menu.
Enter the IP address of the inverter into your internet browser and then go to the menu Settings / Information > CommuniCation > sunspec / Modbus > and check the box for Modbus TCP.

56.6 Kostal LAN Version

Termination	Addressing	Interface
No	Yes	Ethernet

Select „Kostal: Standard“ during device detection.

Supported models:

- See Kostal Piko above.

Overview

- Integrated interface
- Connected using network cable (patch cable) and Ethernet router or switch
- Communication address must be allocated
- Installation steps
  - Assign a static IP address
  - Switch off the inverters and Solar-Log™
  - Connect inverters to the Solar-Log™ (RJ45)
  - Connect the inverters to each other (RJ45)



Note

The RS485 bus address of every inverter has to be configured to 255 so that the Solar-Log can communicate with the inverter.

► Starting with firmware version 3.2.1, inverters set up with bus address 1 are supported.

► The bus address is determined once during the inverter detection process. For this reason, it is not possible to change it while in operation (the Solar-Log™ would then no longer be able to access the inverters). If this has accidentally happened, perform the inverter detection again to be able to access the inverter from the Solar-Log™.

Connect inverters to the Solar-Log™

The wiring is done using a

- network cable (patch cable) and the
- Ethernet router or switch.

Connect the inverters to each other

The inverters are connected together using
the RJ45 interface and, if needed, a router or switch.
Connection setup according to the inverter's instructions.

Assigning IP addresses

- A static IP address has to be assigned to the inverter via the display.
- Please select an IP address with the same class C subnet as the Solar-Log™.
  For example: The Solar-Log™ has the IP address 192.168.178.49.
  The inverter in this case has to have a free IP address in the same range (from 192.168.178.1 to 192.168.178.254).
- Procedure: Start according to the inverter's instructions.

Note

Each inverter must be accessible through the network individually.
It is thereby necessary to activate the network interface on each inverter (under the menu item “LAN” select “Activate LAN”) and to connect the inverters to the network by means of a switch.

Detection via the Solar-Log™ WEB Interface

- For detection on the Solar-Log™ , select the device class under the menu Configuration | Device | Definition | Interface with the plus symbol and then select Kostal as the manufacturer. Confirm your selection with OK.
- Save your selections and then start the Device Detection under Configuration | Device | Detection.

Note Power Management (Inverter Settings)

The power reduction function is only available when the “Sensors” selection has been activated under the -> Settings / Analog Inputs menu.
In order that reactive power control functions, the low-voltage guidelines have to be selected in the country settings for the inverter (e.g. "DE-NSR" for the German low-voltage guidelines).

Caution

The country settings can only be configured once during the initial installation. If the wrong country is selected, it can be reset using the Kostal software tool "PARAKO." This tool can be obtained directly from Kostal after registering.

57 Kstar

57.1 Kstar Multitracker

Termination	Addressing	Interface
DIP switch	Yes	RS485

Select „Kstar: KSG DM/TRIO“ during device detection.

Supported models:

- KSG:
  10k, 12.5K, 15K, 17K, 20K, 25K, 30K, 36K, 50K, 56K, 60K, 72K
- KSG DM:
  3000, 3600, 4200, 5000

Overview

- Integrated interface.
- 3-pole or 2-pole cabling depending on model.
- Connection location depending on model type:
  2 RJ45 sockets on the outside of the inverter.
  RS485 terminal block in the inverter.
- Communication address must be allocated.
- Installation steps.
  - Switch off the inverters and Solar-Log™.
  - Connect inverters to the Solar-Log™.
  - Connect the inverters to each other.
  - Allocate communication address.
    Address range 1 to 32.
    Settings on the inverter’s display according to the manufacturer’s manual.

Connect inverters to the Solar-Log™

The wiring is done using a

- self-made cable connection with RS485 data cable.



Caution

Risk of damage to the unit!
The Solar-Log™ also has an RJ45 socket, which must never be connected to the RJ45 socket on the inverter.

► Only connect inverters via the RS485/422 Solar-Log™ interface(s).

Procedure

1. If you are fabricating the cable yourself, connect the wires as shown in the following diagram:

Solar-Log™ Base RS485 (A) / (B)	RS485 inverter socket
Terminal	PIN
► (A) 6 or (B) 10 (Data+)	► Pin 1 (A) T/R+
► (A) 8 or (B) 12 GND	► Pin 5 GND
► (A) 9 or (B) 13 (Data-)	► Pin 2 (B) T/R-

2. Insert the RJ45 plug into the RJ45 socket on the inverter.
3. If no further inverter connected, terminate the inverter:
   Set the dip switch to “on.”

Connect the inverters to each other

- Connect using a network cable (patch cable) (No Crossover cable)
- Where to connect: RJ45 sockets on the outside of the inverter.

Procedure

1. Insert the RJ45 plug into the free RJ45 socket on the first inverter.
2. Insert the other end of the wire into any RJ45 socket on inverter 2.
3. Connect the other inverters to each other in the same way.
4. Terminate the last inverter, set the DIP switch to “on.”

Allocate communication address

- Recommendation: Continuous numbering from 1 to 32
- Setting: Using the inverter display.
- Procedure: Start according to the inverter’s instructions.

Procedure for the following models:

- KSG-10K, KSG-12.5K, KSG-15K, KSG-17K, KSG-20K, KSG-30K, KSG-50K, KSG-60K

1. If you are fabricating the cable yourself, connect the wires as shown in the following diagram:

Solar-Log™ Base RS485 (A) / (B)	RS485 terminal block
Terminal	PIN
► (A) 6 or (B) 10 (Data+)	► 1 (A) R / T+
► (A) 9 or (B) 13 (Data-)	► 3 (B) R / T-

2. If no other inverter is connected, terminate the inverter according to the inverter instructions.

Note

The following setting needs to be enable so that the PM parameters can be received.
SETUP ► REMOTE CNTRL ► ENABLE

57.2 Kstar - BLUE / G / KSG

Termination	Addressing	Interface
DIP switch	Yes	RS485

Select „Kstar: G/BLUE/KSG“ during device detection.

Supported models:

- BLUE:
  3k, 3KT-M1, 3.6K, 4K, 4KT-M1, 5K, 5KT-M1, 6K, 6KT-M1, 8K, 8KT-M1, 10K, 10KT-M1, 12K, 12KTL, 12KT-M1, 15K, 15KTL, 15KT-M1, 17KT-M1, 20K, 20KTL, 20KT-M1, 25KT-M1, 1000S, 1500S, 2000S, 3000D, 3000S, 4000D, 5000D, 5000D-AU, 6000D, 10000D
- G:
  50KT, 60KT, 70KT, 80KT
- KSG:
  12K, 25KT, 30KT, 30KT-M1, 40KT, 40KT-M1, 120CL, 120CL-MO, 150-UM, 200UH, 250UH, 250UH-M0

Overview

- Integrated interface
- 2-pin wiring
- Connection location depending on model type:
  CT plug on the bottom of the inverter housing.
  RS485 terminal block in the inverter.
- Communication address must be allocated
- Installation steps
  - Switch off the inverters and Solar-Log™
  - Connect inverters to the Solar-Log™
  - Connect the inverters to each other
  - Allocate communication address
    Address range 1 to 32
    Settings on the inverter’s display according to the manufacturer’s manual

Connect inverters to the Solar-Log™

The wiring is done using a

- self-made cable connection with RS485 data cable.

Procedure for the following models:

- BLUE:
  3k, 3KT-M1, 3.6K, 4K, 4KT-M1, 5K, 5KT-M1, 6K, 6KT-M1, 8K, 8KT-M1, 10K, 10KT-M1, 12K, 12KTL, 12KT-M1, 15K, 15KTL, 15KT-M1, 17KT-M1, 20K, 20KTL, 20KT-M1, 25KT-M1, 1000S, 1500S, 2000S, 3000D, 3000S, 4000D, 5000D, 5000D-AU, 6000D, 10000D
- KSG:
  12K, 25KT, 30KT, 30KT-M1, 40KT, 40KT-M1

1. If you are fabricating the cable yourself, connect the wires as shown in the following diagram:

Solar-Log™ Base RS485 (A) / (B)	RS485 CT connector
Terminal	PIN
► (A) 6 or (B) 10 (Data+)	► 3 485A
► (A) 9 or (B) 13 (Data-)	► 4 485B

2. If no other inverter is connected, terminate the inverter according to the inverter instructions.

Procedure for the following model:

- KSG-12K

1. If you are fabricating the cable yourself, connect the wires as shown in the following diagram:

Solar-Log™ Base RS485 (A) / (B)	RS485 terminal block
Terminal	PIN
► (A) 6 or (B) 10 (Data+)	► 1 (A) R / T+
► (A) 9 or (B) 13 (Data-)	► 3 (B) R / T-

2. If no other inverter is connected, terminate the inverter according to the inverter instructions.

Procedure for the following models:

- KSG-120CL, KSG-120CL-M0, KSG-150UM, KSG-200UH, KSG-250UH, KSG-250UH-M0

1. If you are fabricating the cable yourself, connect the wires as shown in the following diagram:

Solar-Log™ Base RS485 (A) / (B)	RS485 terminal block
Terminal	PIN
► (A) 6 or (B) 10 (Data+)	► 1 RS485 A IN+
► (A) 9 or (B) 13 (Data-)	► 3 RS485 A OUT-

2. If no other inverter is connected, terminate the inverter according to the inverter instructions.

Allocate communication address

- Setting: Using the inverter display.
- Procedure: Start according to the inverter's instructions.

Wiring the inverters to each other

- Wiring via 2-wires shielded data cable.
- Wiring according to the inverter instructions.

Note

The following setting needs to be enable so that the PM parameters can be received.
SETUP ► REMOTE CNTRL ► ENABLE

Very important!

Please refer to the latest version of the manufacturer's documentation for the connection of the devices and their configuration.

57.3 Kstar Singletracker

Termination	Addressing	Interface
DIP switch	Yes	RS485

Select „Kstar: KSG-SM“ during device detection.

Supported models:

- KSG SM:
  1500, 2000, 3000, 3600

Overview

- Integrated interface
- 3-pin wiring
- 2 RJ45 sockets on the outside of the inverter
- Communication address must be allocated
- Installation steps
  - Switch off the inverters and Solar-Log™
  - Connect inverters to the Solar-Log™
  - Connect the inverters to each other
  - Allocate communication address
    Address range 1 to 254
    Settings on the inverter’s display according to the manufacturer’s manual

Connect inverters to the Solar-Log™

The wiring is done using a

- self-made cable connection with RS485 data cable.



Caution

Risk of damage to the unit!
The Solar-Log™ also has an RJ45 socket, which must never be connected to the RJ45 socket on the inverter.

► Only connect inverters via the RS485/422 Solar-Log™ interface(s).

Procedure

1. If you are fabricating the cable yourself, connect the wires as shown in the following diagram.

Solar-Log™ Base RS485 (A) / (B)	RS485 inverter socket
Terminal	PIN
► (A) 6 or (B) 10 (Data+)	► Pin 1 (A) T/R+
► (A) 8 or (B) 12 GND	► Pin 5 GND
► (A) 9 or (B) 13 (Data-)	► Pin 2 (B) T/R-

2. Insert the RJ45 plug into the RJ45 socket on the inverter.
3. If no further inverter connected, terminate the inverter:
   Set the dip switch to “on.”

Connect the inverters to each other

- Connect using a network cable (patch cable) (No Crossover cable)
- Where to connect: RJ45 sockets on the outside of the inverter.

Procedure

1. Insert the RJ45 plug into the free RJ45 socket on the first inverter.
2. Insert the other end of the wire into any RJ45 socket on inverter 2.
3. Connect the other inverters to each other in the same way.
4. Terminate the last inverter, set the DIP switch to “on.”

Allocate communication address

- Recommendation: Continuous numbering from 1 to 254
- Setting: Using the inverter display.
- Procedure: Start according to the inverter’s instructions.



Very important!

Please refer to the latest version of the manufacturer‘s documentation for the connection of the devices and their configuration.

58 Mastervolt

58.1 Mastervolt (RS485)

Termination	Addressing	Interface
Yes	No	RS485

Select „Mastervolt“ during device detection.

Supported models:

- SUNMASTER CS:
  7 TL, 10 TL, 12 TL, 15 TL, 20 TL, 30 TL, TL 15k, TL 20k
- SUNMASTER ES:
  2.2, 3.3, 3.6, 4.6, 5.0
- SUNMASTER QS:
  1200, 2000, 3200, 3500, 1200 Pro, 2000 Pro, 3200 Pro, 6400-A, 6400-B, 3200 Max-I, 3500 Max-I, 6400-A Max-I, 6400-B Max-I
- SUNMASTER XL:
  10+, 15, 3300, 3300+, 5000
- SUNMASTER XS:
  2000 single input, 3200 single input, 3300+ single input, 4300 single input, 5000 single input, 6500

Overview

- Integrated interface.
- Where to connect: RJ45 plug outside the housing floor.
- 2-pin wiring.
- Communication address does not have to be assigned.
- Multi-string technology.

Mastervolt inverters are fitted with 1 or 2 MPP trackers depending on the model. Each string input is monitored separately and ideally adjusted to the connected modules. Some inverters are also divided internally into 2 or even 3 individual inverters. For example, the QS6400 is recognized as 2 inverters each with 2 strings, an XL 15 as 3 independent XL5000s.
The Solar-Log™ automatically detects how many inverters and strings are active during inverter detection.

Note

A maximum of 20 inverters can be connected per RS485 bus.

Note

The order in which the inverters are displayed in the Solar-Log™ after detection is random. We strongly recommend that you change the order of the inverters immediately after detection at startup, in the Configuration | Devices | Configuration | order dialog box.

► The inverters can be identified using the displayed serial number.

- Installation steps
  - Switch off the inverters and Solar-Log™
  - Connect inverters to the Solar-Log™
  - Connect the inverters to each other

Connect inverters to the Solar-Log™

The wiring is done using a

- self-made cable connection with RJ45 data cable.

Caution

Risk of damage to the unit!
The Solar-Log™ also has an RJ45 socket, which must never be connected to the RJ45 socket on the inverter.

► Only connect inverters via the RS485/422 Solar-Log™ interface(s).

Procedure

1. If you are making the cable yourself, connect the wires as shown in the following diagram:

Solar-Log™ Base RS485 (A) / (B)	RJ45 inverter
Terminal	PIN
► (A) 6 or (B) 10 (Data+)	► 4
► (A) 9 or (B) 13 (Data-)	► 3

2. Insert the RJ45 plug into the RJ45 socket on the inverter.
3. If no further inverter is connected, terminate the inverter according to the instructions for the inverter.

Connect the inverters to each other

- Connect using a network cable (patch cable)
- Where to connect: RJ45 plug outside the housing floor

Procedure

1. Insert the RJ45 plug into any RJ45 socket on inverter 1.
2. Insert the other end of the wire into any RJ45 socket on inverter 2.
3. Connect the other inverters to each other in the same way.
4. Terminate the last inverter in accordance with the inverter instructions.

59 Mitsubishi

59.1 Mitsubishi with RS485 interface

Termination	Addressing	Interface
Switch	Yes	RS485

Select „Mitsubishi“ during device detection.

Supported models:

- PV-PNS:
  03ATL-xxx, 04ATL-xxx, 06ATL-xxx
- PV-S:
  2600, 3200, 4200, 4600, 6000, 6000A

Overview

- Integrated interface
- Where to connect: 2 RJ11 sockets inside the inverter.
- 2-pin wiring
- Communication address must be allocated.
- Installation steps
  - Switch off the inverters and Solar-Log™
  - Connect inverters to the Solar-Log™
  - Connect the inverters to each other
  - Allocate communication address

Connect inverters to the Solar-Log™

The wiring is done using a

- self-made cable connection with RJ11 cable connection.

Procedure

1. Unscrew the front plate of the inverter as shown in the inverter's instructions.
2. If you are making the cable yourself, connect the wires as shown in the following diagram:

Solar-Log™ Base RS485 (A) / (B)	RJ11 Inverter
Terminal	PIN
► (A) 6 or (B) 10 (Data+)	► 3
► (A) 9 or (B) 13 (Data-)	► 4

3. Insert the RJ1plug into any RJ11 socket on inverter 1.
4. If no further inverter connected, terminate the inverter:
   In the inverter, set the DIP switch for the terminal resistor to ON.
5. Screw the front plate inverter on again if no other inverters are to be connected.

Connect the inverters to each other

- Connect using a data cable with an RJ11 plug.
- Where to connect: 2 RJ11 sockets at the bottom left inside the inverter.

Procedure

1. Unscrew the front plate of the inverter as shown in the inverter's instructions.
2. Insert the RJ1plug into any RJ11 socket on inverter 1.
3. Insert the other end of the cable into any RJ11 socket on inverter 2.
4. Connect the other inverters to each other in the same way.
5. Terminate the last inverter.
   Set the DIP switch for the terminal resistor to ON.
6. Screw the inverter front plate on again.

Allocate communication address

- Recommendation: Continuous numbering starting with 1.
- Setting: Using the inverter display
- Procedure: Start according to the inverter's instructions

60 Motech

60.1 Motech (RS485)

Termination	Addressing	Interface
Yes	No	RS485

Select „Motech“ during device detection.

Supported models:

- PVMATE:
  15E, 20E, 3300MS, 3800MS, 4600MS, 2900U, 3840U, 3900U, 4900U, 5300U, 6500U, 7500U

Overview

- Integrated interface
- Where to connect: RJ45 plug outside the housing floor
- 2-pin wiring
- Communication address does not have to be assigned
- Installation steps
  - Switch off the inverters and Solar-Log™
  - Connect inverters to the Solar-Log™
  - Connect the inverters to each other

Connect inverters to the Solar-Log™

The wiring is done using a

- self-made cable connection with RS485 data cable and terminal block connector.



Caution

Risk of damage to the unit!
The Solar-Log™ also has an RJ45 socket, which must never be connected to the RJ45 socket on the inverter.

► Only connect inverters via the RS485/422 Solar-Log™ interface(s).

Procedure

1. If you are making the cable yourself, connect the wires as shown in the following diagram:

Solar-Log™ Base RS485 (A) / (B)	RJ45 inverter
Terminal	PIN
► (A) 6 or (B) 10 (Data+)	► 7
► (A) 9 or (B) 13 (Data-)	► 8

2. Insert the RJ45 plug into the RJ45 socket on the inverter.
3. If no further inverter is connected, terminate the inverter according to the instructions for the inverter.

Connect the inverters to each other

- Connect using a network cable (patch cable)
- Where to connect: RJ45 sockets on the outside of the inverter.

Procedure

1. Insert the RJ45 plug into any RJ45 socket on inverter 1.
2. Insert the other end of the wire into any RJ45 socket on inverter 2.
3. Connect the other inverters to each other in the same way.
4. Terminate the last inverter in accordance with the inverter instructions.

61 Oelmaier

61.1 Oelmaier

Termination	Addressing	Interface
Yes	Yes	RS485

Select „Oelmaier“ during device detection.

Supported models:

- PAC:
  2, 3, 4, 5, 7
- PAC-S:
  2, 3, 4, 5

Overview

- Integrated interface.
- Where to connect: Terminal strip behind service cover.
- 2-pin wiring.
- Communication address must be allocated.
- Installation steps:
  - Switch off the inverters and Solar-Log™.
  - Connect inverters to the Solar-Log™.
  - Connect the inverters to each other.
  - Allocate communication address.

Connect inverters to the Solar-Log™

The wiring is done using a

- self-made, shielded 2 wire data cable.

Procedure

1. Open the inverter as shown in the inverter's instructions.
2. If you are making the cable yourself, connect the wires as shown in the following diagram:

Solar-Log™ Base RS485 (A) / (B)	Terminal strip inside the inverter
Terminal	Terminal
► (A) 6 or (B) 10 (Data+)	► 1 RS 485 - A / RS 485 +
► (A) 9 or (B) 13 (Data-)	► 9 RS 485 - B / RS 485 -

3. Terminate the inverter as shown in the inverter's instructions.
4. Close inverters.

Connect the inverters to each other

- Where to connect: Terminal strip behind service cover.
- 2-pin wiring.

Allocate communication address

- Recommendation: Continuous numbering starting with 1.
- Setting: Using the solar fitter's menu on the inverter.
- Procedure: Start according to the inverter's instructions

62 Omnik

62.1 Omnik (RS422)

Termination	Addressing	Interface
No	Automatic	RS422

Select „Omnik-RS422“ during device detection.

Supported models:

- OMNIKSOL TL:
  1k, 1.5k, 2k, 2.5k, 3k, 4k, 5k, 6k, 8k, 10k, 12k, 13k, 15k, 17k, 20k
- OMNIKSOL TL2:
  1.5k, 2k, 2.5k, 3k, 4k, 5k

Overview

- Integrated interface.
- Where to connect: RJ45 socket on the outside of the inverter.
- 4-pin cable – only at the RS422 interface.
- Communication address does not have to be assigned.

Note

The order in which the inverters are displayed in the Solar-Log™ after detection is random. We strongly recommend that you change the order of the inverters immediately after detection at startup in the Configuration | Device | Configuration | Order menu box.

► The inverters can be identified using the displayed serial number.

- Installation steps
  - Switch off the inverters and Solar-Log™
  - Connect inverters to the Solar-Log™
  - Connect the inverters to each other

Connect inverters to the Solar-Log™

The wiring is done using a

- self-made cable connection with RS485 data cable.

Caution

Risk of damage to the unit!
The Solar-Log™ also has an RJ45 socket, which must never be connected to the RJ45 socket on the inverter.

► Only connect inverters via the RS422 interface.

Procedure

1. Connect the wires for the cable connection as shown in the following diagram.

Solar-Log™ Base RS422	RJ45 inverter
Terminal	PIN
► 6 (T/RX+)	► PIN 4 RX+
► 9 (T/RX-)	► PIN 5 RX-
► 10 (R/TX+)	► PIN 3 TX+
► 13 (R/TX-)	► PIN 6 TX-

2. Insert the RJ45 plug into any RJ45 socket on inverter 1.

Connect the inverters to each other

- Connect using a network cable (patch cable)
- Where to connect: RJ45 socket outside the inverter

Procedure

1. Insert the RJ45 plug into any RJ45 socket on inverter 1.
2. Insert the other end of the wire into any RJ45 socket on inverter 2.
3. Connect the other inverters to each other in the same way.

62.2 Omnik (RS485)

Termination	Addressing	Interface
No	Automatic	RS485

Select „Omnik-RS485“ during device detection.

Supported models:

- OMNIKSOL TL2-M:
  1k-TL2-M, 1.5k-TL2-M
- OMNIKSOL TL3:
  3k-TL3, 3.68k-TL3, 4k-TL3, 5k-TL3, 6k-TL3
- OMNIKSOL TL3-S:
  2k-TL3-S, 2.5k-TL3-S, 3k-TL3-S

Overview

- Integrated interface.
- Where to connect: Terminal block inside the inverter.
- 3-pin wiring.
- Communication address does not have to be assigned.
- Installation steps:
  - Switch off the inverters and Solar-Log™.
  - Connect inverters to the Solar-Log™.
  - Connect the inverters to each other.

Connect inverters to the Solar-Log™

The wiring is done using a

- self-made cable connection with RS485 data cable.

Note

The order in which the inverters are displayed in the Solar-Log™ after detection is random. We strongly recommend that you change the order of the inverters immediately after detection at startup in the Configuration | Device | Configuration | Order menu box.

► The inverters can be identified using the displayed serial number.

Procedure

1. Connect the wires for the cable connection as shown in the following diagram.

Solar-Log™ Base RS485 (A) / (B)	RJ45 inverter (CON1)
Terminal	PIN (CON1)
► (A) 6 or (B) 10 (Data+)	► PIN 1 - A1 RS485+
► (A) 8 or (B) 12 GND	► PIN 3 GND
► (A) 9 or (B) 13 (Data-)	► PIN 2 - B1 RS485-

2. Connect the data cable to the pins of the CON1 terminal block.

Connect the inverters to each other

- Wiring via terminal block CON1/CON2.
- Where to connect: Terminal block inside the inverter.

Procedure

1. Inverter 1 wiring via terminal block CON2.
2. Inverter 2 wiring via terminal block CON1.
3. Connect the other inverters to each other in the same way.
4. Connect the inverters to each other according to the inverter instructions.

63 Omron

63.1 Omron

Termination	Addressing	Interface
Bridge 9 ► 10	Yes	RS485

Select „Omron“ during device detection.

Supported models:

- KP:
  100L, 125L, 150L, 30K, 30K2, 40K, 40K2, 40K-P, 40K2-P, 55K, 55K-P, 55K2, 55K2-P
- KP-M:
  44M-P, 44M-J4, 44M-PJ4, 55M, 55M-J4, 55M-P, 55M-PJ4

Overview

- Integrated interface.
- Where to connect: Terminal strip inside the inverter.
- 3-pin wiring.
- Communication address must be allocated.
- Installation steps:
  - Switch off the inverters and Solar-Log™.
  - Connect inverters to the Solar-Log™.
  - Connect the inverters to each other.
  - Allocate communication address.

Connect inverters to the Solar-Log™

The wiring is done using a

- self-made, shielded 3 wire data cable.

Procedure

1. Open the inverter as shown in the inverter's instructions.
2. Connect the cable as shown in the following diagram.

Solar-Log™ Base RS485 (A) / (B)	Inverter terminal strip
Terminal	Terminal strip TB401
► (A) 6 or (B) 10 (Data+)	► Pin 4 - Data +
► (A) 8 or (B) 12 GND	► Pin 3 - GND
► (A) 9 or (B) 13 (Data-)	► Pin 5 - Data -

3. If no further inverter connected, terminate the inverter. To do this a bridge must be inserted on the inverter between pins 9 and 10.
4. Close the inverter if no other inverters are to be connected.

Connect the inverters to each other

The wiring is done using a

- self-made, shielded 3 wire data cable.

Procedure

1. Open the inverter as shown in the inverter's instructions.

Inverter n	Inverter n+1
Terminal strip TB401	Terminal strip TB401
► 6	► Pin 3 - GND
► 7	► Pin 4 - Data +
► 8	► Pin 5 - Data -

2. Connect terminals 6, 7 and 8 on inverter 1 to terminals 3, 4 and 5 on inverter 2.
3. Connect the other inverters to each other in the same way.
4. Terminate the last inverter.
   Bridge between pins 9 and 10.
5. Close inverters.

Inverter settings

The following values must be set in the inverter setup:

- COM_485 to 19200bps
- COM_Pari to Even
- COM_Stop to 2bit
- Set the communication protocol to "Auto" or "Compoway/F"; not "Modbus"

Please follow the instructions in the manufacturer's handbook for this.

Allocate communication address

- Recommendation: Continuous numbering starting with 1.
- Setting: Using the inverter display
- Procedure: Start according to the inverter's instructions



Note

A maximum of 31 inverters can be connected per RS485 bus.

64 Pairan

64.1 Pairan

Termination	Addressing	Interface
Jumper	No	RS485

Select „Pairan“ during device detection.

Supported models:

- PAI3phase:
  PAI-3-5000, PAI-3-8000, PAI-3-10000, PAI-3-12500
- Pesos PVI:
  PVI5000, PVI8000, PVI10000

Overview

- Integrated interface
- Where to connect: Round socket on inverter
- 2-pin wiring
- Communication address does not have to be assigned

Installation steps

- Switch off the inverters and Solar-Log™
- Connect inverters to the Solar-Log™
- Connect the inverters to each other

Connect inverters to the Solar-Log™

The wiring is done using a

- self-made cable connection with the round plug.
  The round plug must be obtained from the manufacturer.

Procedure

1. If you are making the cable yourself, connect the wires as shown in the following diagram

Solar-Log™ Base RS485 (A) / (B)	Inverters
PIN	Round socket
► (A) 6 or (B) 10 (Data+)	► Data +
► (A) 9 or (B) 13 (Data-)	► Data -

Connect the inverters to each other

- Connect using a 2 wire, shielded data cable.
- Where to connect: Round socket on inverter.

Procedure

1. self-made cable connection with round plug and a terminal block plug.
2. Also connect the cable to the next inverter in round plug 1.
3. Connect the other inverters to each other in the same way.

65 Phoenixtec

65.1 Phoenixtec

Termination	Addressing	Interface
Yes	No	RS422

Select „Sunville“ during device detection.

Overview

- Interface not integrated; Retrofit RS485 interface board.
- 4-pin cable – only at the RS422 interface.
- Communication address does not have to be assigned.
- Multi-string technology.

The Sunville inverters are fitted with 1 or 3 MPP trackers depending on the model.

The Solar-Log™ automatically detects how many inverters and strings are active during inverter detection.

Note

The order in which the inverters are displayed in the Solar-Log™ after detection is random. We strongly recommend that you change the order of the inverters immediately after detection at startup, in the Configuration | Devices | Configuration | Order dialog box.

► The inverters can be identified using the displayed serial number.

- Installation steps:
  - Switch off the inverters and Solar-Log™.
  - Install the RS485 interface in the inverter.
  - Connect inverters to the Solar-Log™.
  - Connect the inverters to each other.

Installing the RS485 interface

Procedure

Install the RS485 interface board according to the manufacturer’s installation instructions.

Connect inverters to the Solar-Log™

The wiring is done using a

- self-made, shielded 4 wire data cable.

Note

Only connect inverter using the RS422 interface.

Procedure

1. Open the inverter as shown in the inverter's instructions.
2. Pull the free wires through the wire opening in the inverter.
3. If you are making the cable yourself, connect the wires as shown in the following diagram:

Solar-Log™ Base RS422	Inverter terminal strip
Terminal	Terminal
► 6 (T/RX+)	► R+
► 9 (T/RX-)	► R-
► 10 (R/TX+)	► T+
► 13 (R/TX-)	► T-

4. Close the inverter if no other inverters are to be connected.

Connect the inverters to each other

- Connect using a 4 wire, shielded data cable.
- Where to connect: Terminal strip inside the inverter (on the retrofitted RS485 interface).

Procedure

1. Open the inverter as shown in the inverter's instructions.
2. Connect terminals R+, R-, T+ and T- of inverter 1 to the corresponding terminals on inverter 2.
3. Connect the other inverters to each other in the same way.
4. Close inverters.

66 Platinum (formerly Diehl Ako)

66.1 Platinum with RS485 interface

Termination	Addressing	Interface
Yes	No	RS485

Select „Platinum: EIA485“ during device detection.

Supported models:

- Platinum C:
  100 CS, 100 CS-A 208, 100 CS-A 480
- Platinum R3-M:
  7000R3-MDX, 9000R3-MDX, 9000R3-MDXB, 11000R3-MDX, 11000R3-M2DXB, 14000R3-M2DXB, 14000 R3-MDX, 16000R3-MDX, 16000R3-M2DXB
- Platinum R3-S:
  5500R3-S2B, 7000R3-S2B, 8000R3-S2B, 9000R3-S2B
- Platinum S:
  2100 S, 2101 S-A, 2800 S, 3100 S, 3501 S, 3501 S-A, 3800 S, 4300 S, 4301 S, 4301 S-A, 4600 S, 4601 S, 4602 S
- Platinum TL:
  100 CTL, 125 CTL, 4300 TL, 4800 TL, 5300 TL, 6300 TL, 7200 TL, 13000 TL, 16000 TL, 19000 TL, 22000 TL
- Platinum TL3:
  11000 TL3, 13000 TL3, 17000 TL3, 22000 TL3
- Platinum TLD:
  3800 TLD, 3801 TLD, 4300 TLD, 4800 TLD, 5300 TLD, 6300 TLD, 7200 TLD, 13000 TLD, 16000 TLD, 19000 TLD, 22000 TLD, 22001 TLD

Overview

- Integrated interface
- Where to connect: RJ45 socket on the bottom of the inverter
- 2-pin wiring
- Communication address does not have to be assigned

Note

The order in which the inverters are displayed in the Solar-Log™ after detection is random. We strongly recommend that you change the order of the inverters immediately after detection at startup, in the Configuration | Devices | Configuration | Order dialog box.

► The inverters can be identified using the displayed serial number.

- Installation steps
  - Switch off the inverters and Solar-Log™
  - Connect inverters to the Solar-Log™
  - Connect the inverters to each other

Connect inverters to the Solar-Log™

The wiring is done using a

- self-made cable connection with RS485 data cable.

Procedure

1. If you are making the cable yourself, connect the wires as shown in the following diagram:

Solar-Log™ Base RS485 (A) / (B)	RJ45 inverter
Terminal	PIN
► (A) 6 or (B) 10 (Data+)	► RS485 (A+)
► (A) 9 or (B) 13 (Data-)	► RS485 (B-)

2. Insert the RJ45 plug into the RJ45 socket on the inverter.
3. If no further inverter is connected, terminate the inverter according to the instructions for the inverter.

Connect the inverters to each other

- Connect using a network cable (patch cable)
- Where to connect: RJ45 sockets on the bottom of the inverter

Procedure

1. Insert the RJ45 plug into any RJ45 socket on inverter 1.
2. Insert the other end of the wire into any RJ45 socket on inverter 2.
3. Connect the other inverters to each other in the same way.
4. Terminate the last inverter according to the inverter instructions.

66.2 Platinum H

Termination	Addressing	Interface
Yes	Yes	RS485

Select „Platinum: H-Serie“ during device detection.

Overview

- Integrated interface.
- Where to connect: Terminal strip inside the inverter.
- 2-pin wiring.
- Communication address must be allocated.
- Installation steps:
  - Switch off the inverters and Solar-Log™.
  - Connect inverters to the Solar-Log™.
  - Connect the inverters to each other.
  - Configure the inverter’s communication interface.
  - Allocate communication address.

Connect inverters to the Solar-Log™

The wiring is done using a

- self-made, shielded 2 wire data cable.

Procedure

1. Connect wires as shown in the diagram below.

Solar-Log™ Base RS485 (A) / (B)	Inverter terminal strip
Terminal	Terminal
► (A) 6 or (B) 10 (Data+)	► B (Data +)
► (A) 9 or (B) 13 (Data-)	► A (Data -)

2. If no further inverter is connected, terminate the inverter according to the instructions for the inverter.
3. Close the inverter cover if no other inverters are to be connected.

Connect the inverters to each other

The inverters are connected together using
the RS485 interface. Refer to the manufacturer’s inverter manual for the details on how to setup the connection.

Allocate communication address

- Recommendation: Continuous numbering starting with 1
- Setting: Using the inverter display
- Procedure: Start according to the inverter’s instructions

Other configurations

- Activate the RS485 interface Using the inverter display.

Note

Pay particular attention to the instructions in the installation manual regarding the address types, activating the communication interface and the master/slave mode.

67 Polycab

67.1 Polycab

Termination	Addressing	Interface
Yes	Yes	RS485

Select „Polycab“ during device detection.

Supported models:

- PSIS series:
  0.7K, 1K, 1.5K, 2.0K, 2.5K, 3K, 3K-ST, 3.6K, 3.6K-ST, 4K, 4.6K, 5K
- PSIT series:
  6K, 10K, 15K, 20K, 25K, 30K, 36K, 40K, 50K-DC

Overview

- Integrated interface.
- Where to connect: Between the COM round sockets on the outside of the inverter.
- 2-pin wiring.
- Communication address must be allocated.
- Installation steps:
  - Switch off the inverters and Solar-Log™.
  - Connect inverters to the Solar-Log™.
  - Connect the inverters to each other.
  - Allocate communication address.

Note!

It is important to note that there are two different wiring types for the Polycab model.

► Refer to the wiring table further below.

Connect inverters to the Solar-Log™

The wiring is done using a

- ready-made data cable (supplied with the inverter).

or

- self-made, shielded 2 wire data cable with round plug.

Procedure for models up to and including 15K

1. If you are making the cable yourself, connect the wires as shown in the following diagram:

Solar-Log™ Base RS485 (A) / (B)	Inverter COM1 (RS485)
Terminal	PIN
► (A) 6 or (B) 10 (Data+)	► 3 RS485 A
► (A) 8 or (B) 12 GND	► 2 GND
► (A) 9 or (B) 13 (Data-)	► 4 RS485 B

2. Connect the round plug with the inverter's COM1 round socket.
3. Terminate the inverter according to the manufacturer's instructions if no additional inverters are to be connected.

Connect the inverters to each other

- Wiring using Polycab's daisy chain cable.
- Connect the cables according to the inverter manufacturer's instructions.
- Terminate the last inverter according to the inverter manufacturer's instructions.

Assign the communication address

- Recommendation: Continuous numbering starting with 1.
- Default settings on the inverter: Communication address 1
- Setting: Using the inverter display
- Procedure: Start according to the inverter manufacturer's instructions.

Procedure for models 20K and larger:

1. If you are making the cable yourself, connect the wires as shown in the following diagram:

Solar-Log™ Base RS485 (A) / (B)	Inverter RJ45
Terminal	Pin
► (A) 6 or (B) 10 (Data+)	► 1 RS485 A
► (A) 6 or (B) 10 (Data+)	► 4 RS485 A
► (A) 9 or (B) 13 (Data-)	► 2 RS485 B
► (A) 9 or (B) 13 (Data-)	► 5 RS485 B

2. Insert the RJ45 connector into the inverter's COM2 socket.
3. Terminate the inverter according to the manufacturer's instructions if no additional inverters are to be connected.

Connect the inverters to each other

- Wiring using Polycab's daisy chain cable.
- Where to connect: COM round socket on the inverter

Procedure:

1. Insert the RJ45 connector into the first inverter's COM3 socket.
2. Insert the other end of the cable into the COM2 socket on second inverter.
3. Connect the other inverters to each other in the same way.
4. Terminate the last inverter according to the inverter manufacturer's instructions.

Assign the communication address

- Recommendation: Continuous numbering starting with 1.
- Default settings on the inverter: Communication address 1.
- Setting: Using the inverter's display.
- Procedure: Start according to the inverter manufacturer's instructions.

68 Powercom

68.1 Powercom

Termination	Addressing	Interface
Switch	Yes	RS485

Select „POWERCOM“ during device detection.

Supported series:

- SLK-Serie

Overview

- Interface not integrated; Retrofit RS485 interface board.
- 4-pin wiring.
- Communication address must be allocated.
- Installation steps:
  - Allocate communication address.
  - Switch off the inverters and Solar-Log™.
  - Install the RS485 interface in the inverter.
  - Connect inverters to the Solar-Log™.
  - Connect the inverters to each other.

Allocate communication address

- Recommendation: Continuous numbering starting with 1.
- Setting: Using the DIP switch on the interface board.

Before installing the RS485 interface board:

► Allocate the communication address using the 8 interface board DIP switches:

Example - Communication address 1:



Example - Communication address 2:



Example - Communication address 3:



Example - Communication address 4:



Example - Communication address 5:



You will find more information at:
http://en.wikipedia.org/wiki/Binary_number.

Installing the RS485 interface

Procedure

► Install the RS485 interface in the inverter in accordance with the interface board installation instructions.

Connect inverters to the Solar-Log™

The wiring is done using a

- self-made, shielded 4 wire data cable.

Procedure

1. Open the inverter as shown in the inverter's instructions.
2. Pull the free wires through the wire opening in the inverter.
3. If you are making the cable yourself, connect the wires as shown in the following diagram:

Solar-Log™ Base RS485 (A) / (B)	Inverter terminal strip
Terminal	PIN
► (A) 6 or (B) 10 (Data+)	► R+
► (A) 6 or (B) 10 (Data+)	► T+
► (A) 9 or (B) 13 (Data-)	► R-
► (A) 9 or (B) 13 (Data-)	► T-

4. Close the inverter if no other inverters are to be connected.

Connect the inverters to each other

- Connect using a 4 wire, shielded data cable
- Where to connect: Terminal strip inside the inverter on the retrofitted RS485 interface board

Procedure

1. Open the inverter as shown in the inverter's instructions
2. Connect terminals R+, T+, R- and R+ of inverter 1 to the corresponding terminals on inverter 2
3. Connect the other inverters to each other in the same way
4. Close inverters

69 Power-One/Aurora

69.1 Power-One/Aurora

Termination	Addressing	Interface
Switch	Yes	RS485

Select „Power-One“ during device detection.

Supported models:

- PVI:
  3.0-OUTD, 3.0-TL-OUTD, 3.6-OUTD, 3.6-TL-OUTD, 3.8, 4.2-OUTD, 4.2-TL-OUTD, 4.6-OUTD, 6.0-OUTD, 8.0-OUTD, 10.0-I, 10.0-I (208 VAC), 10.0-I (480 VAC), 10.0-I (600 VAC), 10.0-TL-OUTD, 12.0-I, 12.0-I (480 VAC), 12.0-I (600 VAC), 12.5-OUTD, 55-TL, 110-TL, 134-TL, 165-TL, 200-TL, 220-TL, 267-TL, 275-TL, 330-TL, 334-TL, 400-TL, 2000, 2000-OUTD, 3600, 3600-OUTD, 5000-OUTD, 5000-TL-OUTD, 6000-OUTD, 6000-TL-OUTD
- PVI Central:
  50, 100-TL, 150-TL, 200-TL, 250-TL, 300-TL
- TRIO:
  5.8, 7.5, 8.5, 20.0, 27.6
- ULTRA:
  700, 1050, 1400
- UNO:
  2.0-I, 2.5-I, 7.6, 8.6

Overview

- Interface integrated.
  Sometimes different interfaces are used for indoor and outdoor models.
- Where to connect: RS485 terminal strips inside the inverter.
- 3-pin wiring.
- Communication address must be allocated.
- Installation steps:
  - Switch off the inverters and Solar-Log™.
  - Connect inverters to the Solar-Log™.
  - Connect the inverters to each other.
  - Allocate communication address.

Connect inverters to the Solar-Log™

The wiring is done using a

- self-made, shielded 3 wire data cable.

Procedure

1. Open the inverter as shown in the inverter's instructions.
2. Pull the free wires through the wire opening in the inverter.
3. If you are making the cable yourself, connect the wires as shown in the following diagram:

Solar-Log™ Base RS485 (A) / (B)	Inverter terminal strip (Outdoor)
Terminal	Terminal
► (A) 6 or (B) 10 (Data+)	► +T/R (RS485+)
► (A) 8 or (B) 12 GND	► RTN (GND)
► (A) 9 or (B) 13 (Data-)	► -T/R (RS485-)

4. If no further inverter connected, terminate the inverter:
   In the inverter, set the DIP switch for the terminal resistor to ON.
5. Close the inverter if no other inverters are to be connected.

Connect the inverters to each other

- Connect using a 3 pin, shielded data cable.
- Where to connect: RS485 terminal strips inside the inverter

Procedure

1. Open the inverter as shown in the inverter's instructions.
2. Connect terminals +T/R, -T/R and RTN of inverter 1 to the corresponding terminals on inverter 2.
3. Connect the other inverters to each other in the same way.
4. Terminate the last inverter.
   Set the DIP switch for the terminal resistor to ON.
5. Close inverters.

Allocate communication address

- Recommendation: Continuous numbering from Solar-Log™, starting from 2 (not 1!).
- Setting: Using the inverter display
- Procedure: Start according to the inverter's instructions

70 PrimeVOLT

70.1 PrimeVOLT

Termination	Addressing	Interface
DIP switch	Yes	RS485

Select „PrimeVOLT“ during device detection.

Supported models:

- PV-N-V:
  3000N-V
- PV-T-U:
  5000T-U, 8000T-U, 10000T-U, 15000T-U, 20000T-U, 30000T-U
- PV-W-V:
  4000W-V, 5000W-V, 5000W-HV

Overview

- Integrated interface.
- Where to connect: Terminal strip inside the inverter.
- 2-pin wiring.
- Communication address must be allocated.
- Installation steps:
  - Switch off the inverters and Solar-Log™.
  - Connect inverters to the Solar-Log™.
  - Connect the inverters to each other.
  - Allocate communication address.

Connect inverters to the Solar-Log™

The wiring is done using a

- self-made, shielded 2 wire data cable.

Procedure

1. Open the inverter as shown in the inverter's instructions.
2. If you are making the cable yourself, connect the wires as shown in the following diagram:

Solar-Log™ Base RS485 (A) / (B)	Terminal strip inside the inverter
Terminal	RS485 terminal
► (A) 6 or (B) 10 (Data+)	► 1 T/R 1+
► (A) 9 or (B) 13 (Data-)	► 2 T/R 1-

3. If no further inverter connected, terminate the inverter:
   In the inverter, set the DIP switch for the terminal resistor to ON.
4. Close inverters.

Connect the inverters to each other

- Where to connect: Terminal strip inside the inverter
- 2-pin wiring

Procedure

1. Open the inverter as shown in the inverter's instructions.
2. If you are making the cable yourself, connect the wires as shown in the following diagram:

Terminal strip inside the inverter	Terminal strip inside the inverter
RS485 terminal	RS485 terminal
► 1 T/R 1+	► 1 T/R 2+
► 2 T/R 1-	► 2 T/R 2-

3. Connect terminals A and B on inverter 1 to the corresponding terminals on inverter 2.
4. Connect the other inverters to each other in the same way.
5. Terminate the last inverter.
   Set the DIP switch for the terminal resistor to ON.
6. Close inverters.

Allocate communication address

- Recommendation: Continuous numbering starting with 1.
- Setting: Using the inverter DIP switch
- Procedure: Start according to the inverter's instructions

71 PVPowered

71.1 PV Powered – central inverter RS485

Termination	Addressing	Interface
Jumper	Yes	RS485

Select „PVPowered“ during device detection.

Supported models:

- PVP Commercial:
  30KW, 35KW, 50KW, 75KW, 100KW, 250KW, 260KW, 500KW

Overview

- Integrated interface.
- Where to connect: Modbus Slave socket on interface board.
- 3-pin wiring.
- Communication address must be allocated.
- Installation steps:
  - Switch off the inverters and Solar-Log™.
  - Connect inverters to the Solar-Log™.
  - Set the address of the inverters.
  - Connect the inverters to each other.

Connect inverters to the Solar-Log™

The wiring is done using a

- self-made 3 pin connection cable.

Note

The transfer rate for Modbus (RS485) on delivery to the customer is set to 9600bps. Please check these settings.

Procedure

1. Open the inverter as shown in the inverter's instructions.
2. Pull the free wires through the wire opening in the inverter.
3. If you are making the cable yourself, connect the wires as shown in the following diagram:

Solar-Log™ Base RS485 (A) / (B)	RJ45 inverter
Terminal	PIN
► (A) 6 or (B) 10 (Data+)	► 2 - D+
► (A) 8 or (B) 12 GND	► 1 - GND
► (A) 9 or (B) 13 (Data-)	► 3 - D-

4. If no further inverter connected, terminate the inverter:
   Inside the inverter set the supplied jumper from „J4“ to „J5“.
5. Setting the address for the inverter: Set SW1 to „0“ and SW2 to „1“ in order to set the parameters for the inverter with the address „01“.
6. Close the inverter if no other inverters are to be connected.

Connect the inverters to each other

The wiring is done using a

- self-made connection cable and terminal block connector.
- Where to connect: Terminal strip inside the inverter

Procedure

1. Open the inverter as shown in the inverter's instructions.
2. Pull the free wires through the wire opening in the inverter.
3. If you are making the cable yourself, connect the wires as shown in the following diagram:

Solar-Log™ Base RS485 (A) / (B)	RJ45 inverter
Terminal	PIN
► (A) 6 or (B) 10 (Data+)	► 2 - D+
► (A) 8 or (B) 12 GND	► 1 - GND
► (A) 9 or (B) 13 (Data-)	► 3 - D-

4. Connect terminals GND, D+ and D- of inverter 1 to the corresponding terminals on inverter 2.
5. Connect the other inverters to each other in the same way.
6. Terminate the last inverter in accordance with the manufacturer's specifications.
   Inside the inverter set the supplied jumper from "J4" to "J5"
7. Address the individual inverters in accordance with the manufacturer's handbook: Inverter 1 should be the inverter that is directly connected to the Solar-Log™. To this end, set SW1 to "0". Depending on the position of the inverter in the bus, SW2 should be set to 1-9.
   If more than 9 inverters are to be connected to one Solar-Log™, please read the manufacturer's instructions for further information.
8. Close the inverter if no other inverters are to be connected.

71.2 PV Powered - string inverter

Termination	Addressing	Interface
No	Yes	Ethernet

Select „PVPowered“ during device detection.

Supported models:

- PVP Residential:
  1100, 2000, 2500, 2800, 3000, 3500, 4600, 4800, 5200

Overview

- Integrated interface.
- Connected using network cable (patch cable) and Ethernet router or switch.
- Communication address must be allocated.
- Installation steps:
  - Allocate communication address.
  - Connect inverters to the Solar-Log™ (RJ45).
  - Connect the inverters to each other (RJ45).

Allocate communication address

- Recommendation: Continuous numbering starting with 1.
- Setting: Using the inverter display.
- Procedure: Before connecting to the Ethernet router or switch and allocating the IP address.

Assigning IP addresses

- Please select an IP address with the same class C subnet as the Solar-Log™.
  For example: The Solar-Log™ has the IP address 192.168.178.49.
  The inverter in this case has to have a free IP address in the same range (from 192.168.178.1 to 192.168.178.254).
- Procedure: Start according to the inverter‘s instructions

Connect inverters and the Solar-Log™.

The wiring is done using a

- network cable (patch cable) and the
- Ethernet router or switch.

Procedure

1. Set different unit IDs on each inverter in accordance with the inverter's instructions.
2. Connect the Solar-Log™ and the inverter to the router or switch.

72 Q3

72.1 Q3 3000-6600

Termination	Addressing	Interface
Yes	Yes	RS485

Note

The same protocol must be selected on both devices In order to ensure correct communication between the Solar-Log™ and the inverters.

Protocol selection for device detection:

- Q3: Protocol 1
- Q3: Protocol 9

The following types are to be connected according to this diagram:

- QX3000, QX4200, OX5500, QX6600

Overview

- Integrated interface.
- Where to connect: Between the COM round sockets on the outside of the inverter.
- 3-pin wiring.
- Communication address must be allocated.
- Installation steps:
  - Switch off the inverters and Solar-Log™.
  - Connect inverters to the Solar-Log™.
  - Connect the inverters to each other.
  - Allocate communication address.

Connect inverters to the Solar-Log™

Connecting is done using a self-made, shielded 3 wire data cable.

Procedure

1. Connect wires as shown in the diagram below.

Solar-Log™ Base RS485 (A) / (B)	Inverter terminal strip
Terminal	Terminal
► (A) 6 or (B) 10 (Data+)	► 1 (RS485-A)
► (A) 8 or (B) 12 GND	► 3 (GND)
► (A) 9 or (B) 13 (Data-)	► 2 (RS485-B)

2. If no further inverter is connected, terminate the inverter according to the instructions for the inverter.

Connect the inverters to each other

- Connect using a self-made daisy chain cable.
- Where to connect: X2 connection socket on outside of the inverter.

Procedure

1. Insert the plug into socket X2 on inverter 1.
2. Insert the other end of the wire into the X2 socket on inverter 2.
3. Connect the other inverters to each other in the same way.
4. Terminate the last inverter in accordance with the inverter instructions.

Allocate communication address

- Recommendation: Continuous numbering starting with 1.
- Default settings on the inverter: Communication address 1
- Setting: Using the inverter display Notes
  - Select Address for ProLog in the Communication / RS485 menu
  - Set Protocol type COM 1 to 9 in the Communication menu
- Procedure: Start according to the inverter's instructions

72.2 Q3 12000-14000

Termination	Addressing	Interface
Yes	Yes	RS485

Note

The same protocol must be selected on both devices In order to ensure correct communication between the Solar-Log™ and the inverters.

Protocol selection for device detection:

- Q3: Protocol 1
- Q3: Protocol 9

The following types are to be connected according to this diagram:

- QX12000, QX14000

Overview

- Integrated interface.
- Where to connect: Round pin plug on the outside of the inverter.
- 3-pin wiring.
- Communication address must be allocated.
- Inverters must be grounded otherwise this could lead to problems with inverter detection.
- Installation steps:
  - Switch off the inverters and Solar-Log™.
  - Connect inverters to the Solar-Log™.
  - Connect the inverters to each other.
  - Allocate communication address.

Connect inverters to the Solar-Log™

- self-made, shielded 3 wire data cable.

Procedure

1. If you are making the cable yourself, connect the wires as shown in the following diagram:

Solar-Log™ Base RS485 (A) / (B)	Inverter terminal strip
Terminal	Terminal
► (A) 6 or (B) 10 (Data+)	► 2 - Data +
► (A) 8 or (B) 12 GND	► 3 - GND
► (A) 9 or (B) 13 (Data-)	► 4 - Data -

2. Terminate pin 1 on the terminal block connector and pin 4 on the Solar-Log™ using the 120 Ω terminal resistor.
3. Terminate on the inverter in accordance with the manufacturer's handbook.

Connect the inverters to each other

- Connection in the master-slave data network using an 1:1 cable with M12 plug connector (available as an optional extra from Q3). Sockets X6 and X7 are connected to each other electrically.
- Where to connect: Round pin plug on the outside of the inverter.

Procedure

1. Insert the plug into the X6 socket on inverter 1.
2. Insert the other end of the wire into the X7 socket on inverter 2.
3. Connect the other inverters to each other in the same way.
4. Terminate the last inverter according to the manufacturer's instructions.

Allocate communication address

- Setting: Using the inverter's control panel.
  Recommendation: Continuous numbering starting with 1.
- Procedure: Start according to the inverter's instructions

72.3 QX3

Termination	Addressing	Interface
No	Yes	Ethernet

Select „Q3:QX3“ during device detection.

The following types are to be connected according to this diagram:

- QX³4000, QX³5000, QX³6000, QX³7000, QX³8000, QX³10000, QX³13000, QX³15000, QX³18000

Overview

- Integrated interface
- The inverter‘s IP address has to be assigned.
- Connected using network cable (patch cable) and Ethernet router or switch
- Installation steps
  - The inverter‘s has to be assigned a static IP address.
  - Switch off the inverters and Solar-Log™
  - Connect inverters to the Solar-Log™ (RJ45).
  - Connect the inverters to each other (RJ45).

Connect inverters to the Solar-Log™

The wiring is done using a

- network cable (patch cable) and the
- Ethernet router or switch.

Connect the inverters to each other

The inverters are connected together using
the RJ45 interface and, if needed, a router or switch.
Connection setup according to the inverter‘s instructions.

Assigning IP addresses

- A static IP address has to be assigned to the inverter via the display.
- Please select an IP address with the same class C subnet as the Solar-Log™.
  For example: The Solar-Log™ has the IP address 192.168.178.49.
  The inverter in this case has to have a free IP address in the same range (from 192.168.178.1 to 192.168.178.254).
- Procedure: Start according to the inverter‘s instructions



Note

Each inverter has to be individually reachable via the network. For this, the network interface has to be activated for every inverter (select "Activate LAN" under the LAN menu) and and the inverter needs to be connected to the local access network (LAN) via a switch.

Detection via the Solar-Log™ WEB Interface

- For detection on the Solar-Log™ , select the device class under the menu Configuration | Device | Definition | Interface with the plus symbol and then select “Q3:QX3“ as the manufacturer. Confirm your selection with OK.
- Save your selections and then start the Device Detection under Configuration | Device | Detection.

Note for feed-in management

Supported by Solar-Log
starting with inverter firmware version 19

Note

Using the inverter's web interface, select "External control via network interface" under “Settings ► Installation ► Grid Company Settings ► Power Reduction," and under “cos(phi) Settings.”

72.4 QY

Termination	Addressing	Interface
Yes	Yes	RS485

Note

The same protocol must be selected on both devices In order to ensure correct communication between the Solar-Log™ and the inverters.

Protocol selection for device detection:

- Q3: Protocol 1
- Q3: Protocol 9

Supported models:

- QY3000/1, QY3000, QY4000, QY5000

Overview

- Integrated interface
- Where to connect: Round pin plug on the outside of the inverter.
- 3-pin wiring.
- Communication address must be allocated.
- Inverters must be grounded otherwise this could lead to problems with inverter detection.
- Installation steps:
  - Switch off the inverters and Solar-Log™.
  - Connect inverters to the Solar-Log™.
  - Connect the inverters to each other.
  - Allocate communication address.

Connect inverters to the Solar-Log™

- self-made, shielded 3 wire data cable.

Procedure

1. If you are making the cable yourself, connect the wires as shown in the following diagram:

Solar-Log™ Base RS485 (A) / (B)	Inverter terminal strip
Terminal	Terminal
► (A) 6 or (B) 10 (Data+)	► 2 - Data +
► (A) 8 or (B) 12 GND	► 3 - GND
► (A) 9 or (B) 13 (Data-)	► 4 - Data -

2. Terminate pin 1 on the terminal block connector and pin 4 on the Solar-Log™ using the 120 Ω terminal resistor.
3. Terminate on the inverter in accordance with the manufacturer's handbook.
4. Close the inverter if no other inverters are to be connected.

Connect the inverters to each other

- Connection in the master-slave data network using an 1:1 cable with M12 plug connector.
- Sockets X6 and X7 are connected to each other electrically.
- Where to connect: Round pin plug on the outside of the inverter.

Procedure

1. Insert the plug into the X6 socket on inverter 1.
2. Insert the other end of the wire into the X7 socket on inverter 2.
3. Connect the other inverters to each other in the same way.
4. Terminate the last inverter according to the manufacturer‘s instructions.

Allocate communication address

- Setting: Using the inverter‘s control panel, parameter 89 in the communication menu.
  Recommendation: Continuous numbering starting with 1.
  Set this in the SSP address menu item.
- Procedure: Start according to the inverter‘s instructions.



Note

The mode Fixed cos Phi has to be set according to the manufacturer's specifications for all of the inverters to use active and reactive power management.

73 RCT Power

73.1 RCT Power

Termination	Addressing	Interface
Yes	Yes	RS485

Select „RCT Power“ during device detection.

Supported models:

- Power Inverter 4.0, Power Inverter 5.0, Power Inverter 6.0

Overview

- Integrated interface.
- Where to connect: Terminal strip X102 inside the inverter.
- 2-pin wiring.
- The communication address has to be assigned.
- Installation steps:
  - Switch off the inverters and the Solar-Log™.
  - Connect the inverters to the Solar-Log™.
  - Assign the communication address.
  - Terminate inverter.

Connect the inverters to the Solar-Log™

The wiring is done using a:

- self-made, shielded 2-wire data cable.

Note

The RCT PowerApp has to be downloaded from the PlayStore in order to adjust the inverter's address. Wire connections according to the app instructions.

Procedure:

1. Open the inverter according to the inverter's instructions.
2. Connect the wires for the cable connection as shown in the following diagram:

Solar-Log™ Base RS485 (A) / (B)	Terminal strip X102
Terminal	Pin
► (A) 6 or (B) 10 (Data+)	► +
► (A) 9 or (B) 13 (Data-)	► -

3. Terminate the inverter according to the inverter's instructions if no additional inverters are to be connected.
4. Close the inverter if no other inverters are to be connected.

Connect the inverters to each other.

- Where to connect: Terminal strip X102 inside the inverter.
- Connect the inverters to each other according to the inverter instructions.

Assign the communication address

- Recommendation: Continuous numbering starting with 1 going to 250.
- Setting: via RCT PowerApp.
- Procedure: According to the RCT PowerApp instructions.

Note!

A maximum of 32 devices can be connected per RS485 bus.

Note on the inverter:

Please note that the latest software version (min. 4733) is installed on the RCT Power device and the RS485 working mode is set to „Modbus Slave“ in the APP. (default setting)

To do this, please proceed as follows:

Start „RCT Power App“ and continue:
Click on „ “ ► Log in, password „Installer“ ► Device ► Settings ► Interfaces ► RS485.

Select the option „Modbus Slave“ under „RS485 working mode“ and enter the communication address of the inverter under „RS485 address“. After completing the setting, press „Flash“.

74 REFUSOL

74.1 REFUSOL

Termination	Addressing	Interface
Terminating plug	Yes	RS485

Note

The same protocol must be selected on both devices In order to ensure correct communication between the Solar-Log™ and the inverters.

Protocol selection for device detection:

- RefuSol: Native (for PM control)
- RefuSol: Generic

Overview

- Integrated interface.
- Where to connect: RJ45 socket on the bottom of the inverter.
- 2-pin wiring.
- Communication address must be allocated.
- Installation steps:
  - Switch off the inverters and Solar-Log™.
  - Connect inverters to the Solar-Log™.
  - Connect the inverters to each other.
  - Allocate communication address.

Instructions for older Solar-Log™/ Refu installations

- Set compatibility

Note

To use active and reactive power management, all of the inverters need to be set to:

► Protocol 1
► 57600 baud
► Parameter 1164 = 2

Connect inverters to the Solar-Log™

The wiring is done using a

- self-made, shielded 2 wire data cable.

Procedure for the following devices:

- 008k, 008k-IEC, 010k, 011k, 012k, 013k, 013K (808), 015k, 016k, 017k, 017K (808), 020k, 020K (808), 020K-SCI, 023K-460VAC, 040k (842), 040K-IEC, 046K (842), 046K-IEC

1. Connect wires as shown in the diagram below:

Solar-Log™ Base RS485 (A) / (B)	RS485 inverter socket
Terminal	PIN
► (A) 6 or (B) 10 (Data+)	► 2 RS485+
► (A) 9 or (B) 13 (Data-)	► 3 RS485-

2. If no further inverter connected, terminate the inverter:
   On the sockets "RS485 OUT" with REFUSOL round plugs bypass the connections PIN1 to PIN2 and PIN3 to PIN4.
3. Close the inverter if no other inverters are to be connected.

Connect the inverters to each other

- Connect using
  - 2-wire, shielded data cable and
  - 4-pin "SACC-M12MS-4SC" plug (two plugs included with the inverter)
- Where to connect: RS485 sockets on the bottom of the inverter.

The RS485 IN and OUT sockets are each double connections so that the wiring can be continued to the next inverter.

Procedure

1. Connect the data cable to the "SACC-M12MS-4SC" plug as shown in the inverter's instructions.
2. Insert one plug into the OUT (X14B) socket of inverter 1.
3. Insert the other end of the wire into the IN socket (X15B) on inverter 2.
4. Connect the other inverters to each other in the same way.
5. Terminate the last inverter.
   On the sockets "RS485 OUT" with REFUSOL round plugs bypass the connections PIN1 to PIN2 and PIN3 to PIN4.
6. Close inverters.

Allocate communication address

- Recommendation: Continuous numbering starting with 1; highest possible address: 31

Set the following parameters on the inverter's display:

1. Press "F1", select Numerical list, press "ENTER".
2. Set parameter number 2000 [password protection],
   press "ENTER" twice.
3. Enter 72555, press "ENTER"
4. Set parameter number 0406, press "ENTER"
5. Select sub parameter 0406,3, press "ENTER"
6. Enter figure for communication x
   [x = continuous numbering starting with 1; highest possible address: 31], press "ENTER". 31], press "ENTER".

After configuring on the display:

1. Using the installed DC isolating switch turn the inverters on and off briefly so that the settings are activated.
2. Set the date and time on the inverter as shown in the inverter instructions.

Older Solar-Log™ / Refusol installations: Set compatibility

With older Solar-Log™ / Refusol installations the inverter had to be set with additional parameters for Solar-Log™ compatibility. This is only still necessary if an inverter has been replaced because it was faulty or if the system is extended. In these cases the new inverters must also be provided with the extended parameters again.

The extended parameters are only available starting from inverter firmware version 800.2.20 or higher. The firmware version can be checked on the inverter menu:

► "F1" / Numerical list / Parameters 1.1 to 1.3

Current firmware versions and update instructions can be found at www.refu-elektronik.com/en.

Set the following parameters on the inverter's display:

1. Press "F1"
2. Select Numerical list, press "ENTER".
3. Set parameter number 0407 press "ENTER"
4. Select sub parameter 0407,3, press "ENTER"
5. Enter "2"
   [Communication type RS485: Solarlog], press "ENTER".31], press "ENTER".
6. Set parameter number 0420 press "ENTER"
7. Select sub parameter 0420,3, press "ENTER"
8. Enter the numerical value 9600, press "ENTER"
9. Using the installed DC isolating switch turn the inverters on and off briefly so that the settings are activated.

Note

The numerical value "2" under point 5 in the settings refers to the old Solar-Log protocol and the value "1" to the native protocol for active and reactive power control.
The value under point 8 refers to the inverter's baud rate and is 9600 for the old Solar-Log protocol and 57600 for the native protocol.

Allocate communication address

- Recommendation: Continuous numbering starting with 1.
- Setting: Using the inverter display
- Procedure: Start according to the inverter's instructions

Note

To use active and reactive power management, all of the inverters need to be set to:

► Protocol 1
► 57600 baud
► Parameter 1164 = 2

Note

A maximum of 31 inverters can be connected per RS485 bus.

PIN assignment of the following models:

- 003k, 004k, 005k, 006k

Solar-Log™ Base RS485 (A) / (B)	Terminal strip inverter
Pin	Pin
► (A) 6 or (B) 10 (Data+)	► RS485 A (+)
► (A) 9 or (B) 13 (Data-)	► RS485 B (-)

Please refer to the inverter manufacturer's manual for termination.

PIN assignment of the following models:

- 012K-UL, 016K-UL, 020K-UL, 024K-UL, 100k (Central inverter), 160k (Central inverter), 333k (Central inverter), 500k (Central inverter), 630k (Central inverter)

Solar-Log™ Base RS485 (A) / (B)	Terminal block inverter
Pin	Pin
► (A) 6 or (B) 10 (Data+)	► 2 RS485+
► (A) 9 or (B) 13 (Data-)	► 3 RS485-

Please refer to the inverter manufacturer's manual for termination.

PIN assignment of the following models:

- 20K-2T (850), 20K-3T, 33K-2T (850), 50K-3T (850)

Solar-Log™ Base RS485 (A) / (B)	Inverter RJ45 connector
Pin	Pin
► (A) 6 or (B) 10 (Data+)	► 2 RS485 A (+)
► (A) 9 or (B) 13 (Data-)	► 1 RS485 B (-)

Please refer to the inverter manufacturer's manual for termination.

PIN assignment of the following model:

- 100K (880)

Solar-Log™ Base RS485 (A) / (B)	Inverter RJ45 connector
Pin	Pin
► (A) 6 or (B) 10 (Data+)	► 4 Data+
► (A) 9 or (B) 13 (Data-)	► 5 Data-

The last inverter must be terminated with the bus termination (120 Ω).

PIN assignment of the following models:

- 25K-3T, 33K-3T, 50k-4T, 110K-10T, 125K-10T

Solar-Log™ Base RS485 (A) / (B)	COM port
Pin	Pin
► (A) 6 or (B) 10 (Data+)	► 1 RS485 A1-1 (RS485A)
► (A) 9 or (B) 13 (Data-)	► 3 RS485 B1-1 (RS485B)

Please refer to the inverter manufacturer's manual for termination.

Important:
Only 2 wires are used, the other pins/cable ends should remain isolated.

PIN assignment of the following model:

- 350K-8T

Solar-Log™ Base RS485 (A) / (B)	Terminal block inverter
Pin	Pin
► (A) 6 or (B) 10 (Data+)	► 2 RS485A (+)
► (A) 9 or (B) 13 (Data-)	► 3 RS485B (-)

Please refer to the inverter manufacturer's manual for termination.

Very important!

For the connection of the devices of the respective manufacturer, please observe the manufacturer's documentation in the respective valid version.

75 REP

75.1 REP

Termination	Addressing	Interface
DIP switch	Yes	RS485

Select „REP“ during device detection.

Supported models:

- PV-3000N-V, PV-5000T-U, PV-5000W-V, PV-8000T-U, PV-10000T-U, PV-15000T-U

Overview

- Integrated interface
- Where to connect: Terminal strip inside the inverter
- 2-pin wiring
- Communication address must be allocated.
- Installation steps
  - Switch off the inverters and Solar-Log™
  - Connect inverters to the Solar-Log™
  - Connect the inverters to each other
  - Allocate communication address

Connect inverters to the Solar-Log™

The wiring is done using a

- self-made, shielded 2 wire data cable.

Procedure

1. Open the inverter as shown in the inverter's instructions.
2. If you are making the cable yourself, connect the wires as shown in the following diagram:

Solar-Log™ Base RS485 (A) / (B)	Terminal strip inside the inverter
Terminal	RS485 terminal
► (A) 6 or (B) 10 (Data+)	► 1 T/R 1+
► (A) 9 or (B) 13 (Data-)	► 2 T/R 1-

3. If no further inverter connected, terminate the inverter:
   In the inverter, set the DIP switch for the terminal resistor to ON.
4. Close inverters.

Connect the inverters to each other

- Where to connect: Terminal strip inside the inverter.
- 2-pin wiring.

Procedure

1. Open the inverter as shown in the inverter's instructions.
2. If you are making the cable yourself, connect the wires as shown in the following diagram:

Terminal strip inside the inverter	Terminal strip inside the inverter
RS485 terminal	RS485 terminal
► 1 T/R 1+	► 1 T/R 2+
► 2 T/R 1-	► 2 T/R 2-

3. Connect terminals A and B on inverter 1 to the corresponding terminals on inverter 2.
4. Connect the other inverters to each other in the same way.
5. Terminate the last inverter.
   Set the DIP switch for the terminal resistor to ON.
6. Close inverters.

Allocate communication address

- Recommendation: Continuous numbering starting with 1.
- Setting: Using the inverter DIP switch.
- Procedure: Start according to the inverter's instructions.

76 Reverberi

76.1 Reverberi - EDI series

Termination	Addressing	Interface
Yes	Yes	RS485

Select „Reverberi“ during device detection.

Supported models:

- EDI 1, EDI 1.3, EDI 2, EDI 2.0, EDI 2.7, EDI 3, EDI 3.3, EDI 4, EDI 5, EDI 5.5, EDI 6, EDI 7

Overview

- Integrated interface
- Where to connect: Terminal strip inside the inverter
- 4-pin wiring
- Communication address must be allocated.
- Installation steps
  - Switch off the inverters and Solar-Log™
  - Connect inverters to the Solar-Log™
  - Allocate communication address
  - Terminate inverter

Connect inverters to the Solar-Log™

The wiring is done using a

- self-made, shielded 4 wire data cable with a terminal block connector.

Procedure:

1. Open the inverter as shown in the inverter's instructions.
2. Pull the free wires through the wire opening in the inverter.
3. If you are making the cable yourself, connect the wires as shown in the following diagram:

Solar-Log™ Base RS485 (A) / (B)	Terminal strip inverter
Terminal	PIN
► (A) 6 or (B) 10 (Data+)	► 5
► (A) 6 or (B) 10 (Data+)	► 7
► (A) 9 or (B) 13 (Data-)	► 4
► (A) 9 or (B) 13 (Data-)	► 6

4. If no further inverter connected, terminate the inverter:
5. Close the inverter if no other inverters are to be connected.

Connect the inverters to each other

- Where to connect: Terminal strip inside the inverter.
- 4-pin wiring.

Procedure

1. Open the inverter as shown in the inverter's instructions.
2. Connect the other inverters to each other in the same way.
3. Terminate the last inverter.
4. Close inverters.
5. Allocate communication address.
6. Recommendation: Continuous numbering from Solar-Log™, starting from 2 (not 1!). Last address at 247.
7. Setting: Using the inverter display.
8. Procedure: Start according to the inverter's instructions.



Note

A maximum of 31 inverters can be connected per RS485 bus.

77 Riello

77.1 Riello

Termination	Addressing	Interface
Yes	No	RS422

Select „Riello“ during device detection.

Overview

- Interface not integrated; Retrofit RS485 interface board.
- 4-pin cable – only at the RS422 interface.
- Communication address does not have to be assigned.
- Multi-string technology.

Riello inverters are fitted with 1 or 3 MPP trackers depending on the model. Each string input is monitored separately and ideally adjusted to the connected modules.

The Solar-Log™ automatically detects how many inverters and strings are active during inverter detection.

Note

The order in which the inverters are displayed in the Solar-Log™ after detection is random. We strongly recommend that you change the order of the inverters immediately after detection at startup, in the Configuration | Devices | Configuration | Order dialog box.

► The inverters can be identified using the displayed serial number.

- Installation steps:
  - Switch off the inverters and Solar-Log™.
  - Install the RS485 interface in the inverter.
  - Connect inverters to the Solar-Log™.
  - Connect the inverters to each other.

Installing the RS485 interface

Procedure

► Insert the RS485 interface in the bottom of the inverter in accordance with the interface board installation instructions and screw in.

Connect inverters to the Solar-Log™

The wiring is done using a

- self-made, shielded 4 wire data cable.

Note

Only connect inverter using the RS422 interface.

Procedure

1. Open the inverter as shown in the inverter's instructions.
2. Pull the free wires through the wire opening in the inverter.
3. If you are making the cable yourself, connect the wires as shown in the following diagram:

Solar-Log™ Base RS422	Inverter terminal strip
Terminal	Terminal
► 6 (T/RX+)	► R+
► 9 (T/RX-)	► R-
► 10 (R/TX+)	► T+
► 13 (R/TX-)	► T-

4. If no further inverter is connected, terminate the inverter according to the instructions for the inverter.
5. Close the inverter if no other inverters are to be connected.

Connect the inverters to each other

- Connect using a 4 wire, shielded data cable
- Where to connect: Terminal strip inside the inverter (on the retrofitted RS485 interface)

Procedure

1. Open the inverter as shown in the inverter's instructions.
2. Connect terminals R+, R-, T+ and T- of inverter 1 to the corresponding terminals on inverter 2.
3. Connect the other inverters to each other in the same way.
4. Terminate the last inverter according to the inverter instructions.
5. Close inverters.

78 Rishabh Instruments Pvt. Ltd.

78.1 Rishabh - Radius

Termination	Addressing	Interface
-	Yes	RS485

Select „Rishabh: Radius“ during device detection.

Supported models:

- APV-S-10k-AE-TL-2, APV-S-15k-AE-TL-2, APV-S-20k-AE-TL-2, APV-S-20k-AE-TL-3, APV-S-25k-AE-TL-2

Overview

- Integrated interface.
- Where to connect: Terminal strip inside the inverter.
- 2-pin wiring.
- The communication address has to be assigned.
- Installation steps:
  - Switch off the inverters and the Solar-Log™.
  - Connect the inverters to the Solar-Log™.
  - Assign the communication address.
  - Terminate inverter.

Connect the inverters to the Solar-Log™

The wiring is done using a:

- self-made, shielded 2-wire data cable.

Note

Rishabh have two RS485 connections (A and B). Due to the required baud rate of 38400, Solar-Log™ only supports the RS485 A connection.

Procedure:

1. Open the inverter according to the inverter‘s instructions.
2. Connect the wires for the cable connection as shown in the following diagram:

Solar-Log™ Base RS485 (A) / (B)	Terminal strip inverter RS485 A
Terminal	PIN assignments for RS485 A
► (A) 6 or (B) 10 (Data+)	► A1
► (A) 9 or (B) 13 (Data-)	► B1

3. Terminate the inverter according to the inverter‘s instructions if no additional inverters are to be connected.
4. Close the inverter if no other inverters are to be connected.

Connect the inverters to each other

- Where to connect: Terminal strip inside the inverter.
- Connect the inverters to each other according to the inverter instructions.

Assign the communication address

- Recommendation: Continuous numbering starting with 1 going to 50.
- Setting: Using the inverter‘s display.
- Procedure: Start according to the inverter‘s instructions.

79 SAJ

79.1 Suntrio Plus/R5

Termination	Addressing	Interface
-	Yes	RS485

Select „SAJ“ during device detection.

Supported models:

- R5:
  3K-S2, 3.6K-S2, 4K-T2, 5K-S2, 5K-T2, 6K-S2, 6K-T2, 7K-S2, 8K-S2, 8K-T2, 9K-T2, 10K-T2, 12K-T2, 13K-T2, 15K-T2, 17K-T2, 20K-T2
- Suntrio Plus:
  4k, 5k, 6k, 8k, 10k, 12k, 15k, 17k, 20k, 25k, 33k, 40k, 50k, 60k

Overview

- Integrated interface.
- Where to connect: Round sockets on the outside of the inverter.
- 3-pin wiring.
- Communication address must be allocated.
- Installation steps:
  - Switch off the inverters and Solar-Log™.
  - Connect inverters to the Solar-Log™.
  - Connect the inverters to each other.
  - Allocate communication address.

Connect inverters to the Solar-Log™

The wiring is done using a

- self-made, shielded 3 wire data cable with round plug.

Procedure

1. Connect the wires for the cable connection as shown in the following diagram:

Solar-Log™ Base RS485 (A) / (B)	Inverter round socket
Terminal	PIN
► (A) 6 or (B) 10 (Data+)	► 7 RS485-A
► (A) 8 or (B) 12 GND	► 2 GND_W
► (A) 9 or (B) 13 (Data-)	► 8 RS485-B

2. Insert the round plug into any COM round socket on the inverter.

Connect the inverters to each other

- Wiring using 3 pin cable with round plugs.
- Where to connect: Round sockets on the outside of the inverter.

Procedure

1. Insert the round plug into any round socket on inverter 1.
2. Insert the other end of the cable into any round socket on inverter 2.
3. Connect the other inverters to each other in the same way.

Allocate communication address

- Recommendation: Continuous numbering starting with 1.
- Address range: 1 - 247.
- Setting: Using the inverter display.
- Procedure: Start according to the inverter's instructions.

Procedure for the following models:

- Suntrio Plus:
  4k, 5k, 6k, 8k, 10k

1. Connect the wires for the cable connection as shown in the following diagram:

Solar-Log™ Base RS485 (A) / (B)	Inverter round socket
Terminal	PIN
► (A) 6 or (B) 10 (Data+)	► 1 A+
► (A) 9 or (B) 13 (Data-)	► 2 B-

80 SALICRU

80.1 SALICRU EQX

Termination	Addressing	Interface
Yes	No	RS422

Select „SALICRU: Equinox“ during device detection.

Overview

- Interface not integrated; Retrofit RS485 interface board.
- 4-pin cable – only at the RS422 interface.
- Communication address does not have to be assigned.
- Multi-string technology.

The inverters are fitted with 1 or 3 MPP trackers depending on the model. Each string input is monitored separately and ideally adjusted to the connected modules.

The Solar-Log™ automatically detects how many inverters and strings are active during inverter detection.

Note

The order in which the inverters are displayed in the Solar-Log™ after detection is random. We strongly recommend that you change the order of the inverters immediately after detection at startup, in the Configuration | Devices | Configuration | Order dialog box.
► The inverters can be identified using the displayed serial number.

- Installation steps:
  - Switch off the inverters and Solar-Log™.
  - Install the RS485 interface in the inverter.
  - Connect inverters to the Solar-Log™.
  - Connect the inverters to each other.

Procedure

► Insert the RS485 interface in the bottom of the inverter in accordance with the interface board installation instructions and screw in.

Connect inverters to the Solar-Log™

The wiring is done using a

- self-made, shielded 4 pin data cable.

Note

Only connect inverter using the RS422 interface.

Procedure

1. Open the inverter as shown in the inverter's instructions.
2. Pull the free wires through the wire opening in the inverter.
3. Connect the wires for the cable connection as shown in the following diagram:

Solar-Log™ Base RS422	Inverter terminal strip
Terminal	Terminal
► 6 (T/RX+)	► R+
► 9 (T/RX-)	► T+
► 10 (R/TX+)	► R-
► 13 (R/TX-)	► T-

4. If no further inverter is connected, terminate the inverter according to the instructions for the inverter.
5. Close the inverter if no other inverters are to be connected.

Connect the inverters to each other

- Connect using a 4 pin, shielded data cable
- Where to connect: Terminal strip inside the inverter (on the retrofitted RS485 interface)

Procedure

1. Open the inverter as shown in the inverter's instructions.
2. Connect terminals R+, R-, T+ and T- of inverter 1 to the corresponding terminals on inverter 2.
3. Connect the other inverters to each other in the same way.
4. Terminate the last inverter according to the inverter instructions.
5. Close inverters.

80.2 SALICRU EQXLV

Termination	Addressing	Interface
Resistor	Yes	RS485

Select „SALICRU: Equinox LV“ during device detection.

Overview

- Integrated interface
- 2-pin wiring
- Communication address must be allocated.
- Installation steps
  - Switch off the inverters and Solar-Log™
  - Connect inverters to the Solar-Log™
  - Connect the inverters to each other
  - Allocate communication address

Connect inverters to the Solar-Log™

The wiring is done using a

- self-made, shielded 2 wire data cable.

Procedure

1. Connect the wires for the cable connection as shown in the following diagram:

Solar-Log™ Base RS485 (A) / (B)	Inverter terminal strip
Terminal	Terminal
► (A) 6 or (B) 10 (Data+)	► 4 (A in)
► (A) 9 or (B) 13 (Data-)	► 3 (B in)

2. If no further inverter connected, terminate the inverter:
   Insert 120 Ω terminal resistor.

Connect the inverters to each other

- Connect using a 2 wire, shielded data cable
- Where to connect: Terminal strip inside the inverter

Procedure

1. Connect terminal 2 (A out) on inverter 1 to terminal 4 (A in) on inverter 2.
2. Connect terminal 1 (B out) on inverter 1 to terminal 3 (B in) on inverter 2.
3. Connect the other inverters to each other in the same way.
4. Terminate the last inverter. Insert 120 Ω terminal resistor.

Allocate communication address

- Recommendation: Continuous numbering starting with 1.
- Setting: Using PC software for configuring inverters.
- Procedure: Start according to the inverter's instructions

81 Samil Power

81.1 Samil Power

Termination	Addressing	Interface
-	No	RS422

Select „Samil“ during device detection.

Supported models:

- SolarLake TL, SolarOcean (TL), SolarRiver TL -D, SolarRiver TL (-US, /PT, MPPT)

Overview

- Integrated interface.
- 2 RJ11 sockets inside the inverter.
- 4-pin wiring - only at the RS422 interface.
- Communication address does not have to be assigned.

Note

Only connect inverter using the RS422 interface.

Installation steps:

- Switch off the inverters and Solar-Log™.
- Connect inverters to the Solar-Log™.
- Connect the inverters to each other.

Connect inverters to the Solar-Log™.

The wiring is done using a

- self-made, shielded 4 wire data cable and terminal block connector.

Procedure

1. Open the inverter as shown in the inverter's instructions.
2. Connect the wires for the cable connection as shown in the following diagram:

Solar-Log™ Base RS422	Inverter SolarRiver*	Inverter SolarLake
Terminal	RJ 11 socket	RJ45 socket
► 6 (T/RX+)	► 2 R+	► 3 R+
► 9 (T/RX-)	► 1 R-	► 6 R-
► 10 (R/TX+)	► 4 T+	► 1 T+
► 13 (R/TX-)	► 3 T-	► 2 T-

*Some of the SolarRiver models use the same connection as SolarLake. Setup the wiring accoring to SolarLake in this case.

Note:

The wiring above refers to the RJ45 or RJ11 socket.

3. Insert the RJ1plug into any RJ11 socket on inverter 1.
4. Close the inverter if no other inverters are to be connected.

Connect the inverters to each other

- Wiring via 4-wire shielded data cable.
- Where to connect: RJ11 sockets.

Procedure

Open the inverter as shown in the inverter's instructions.

1. Insert the self-made cable with the RJ11 plug into any RJ11 socket on inverter 1.
2. Insert the RJ11 cable into the 2nd RJ11 socket on inverter 1 and into any RJ11 socket on inverter 2.
3. Connect the other inverters to each other in the same way.
4. Close inverters.

Note

A maximum of 32 inverters can be connected to the RS422 bus.

Pin assignment for Samil Power SolarOcean (TL):

Solar-Log™ Base RS485 (A) / (B)	RS485/RS232 Adapter
Terminal	Adapter - Interface
► (A) 6 or (B) 10 (Data+)	► 4 T/R+
► (A) 8 or (B) 12 GND	► 2 GND
► (A) 9 or (B) 13 (Data-)	► 3 T/R-

Note!

Please follow the manufacturer‘s instructions!

82 Santerno

82.1 Santerno

Termination	Addressing	Interface
Yes	Yes	RS485

Select „Santerno“ during device detection.

Supported models:

- Sunway M-Plus, Sunway M-XR, Sunway TG, Sunway TG NA

Overview

- Integrated interface.
- Where to connect: 9 pin socket on the outside of the housing floor.
- 2-pin wiring.
- Communication address must be allocated.
- Installation steps:
  - Switch off the inverters and Solar-Log™.
  - Install the RS485 interface in the inverter.
  - Connect inverters to the Solar-Log™.
  - Connect the inverters to each other.
  - Allocate communication address.

Connect inverters to the Solar-Log™

The wiring is done using a

- self-made, shielded 2 wire data cable with a 9 pin plug.

Procedure

1. If you are making the cable yourself, connect the wires as shown in the following diagram:

Solar-Log™ Base RS485 (A) / (B)	Inverter terminal strip
Terminal	Terminal
► (A) 6 or (B) 10 (Data+)	► 1 A+ / (A-Line)
► (A) 9 or (B) 13 (Data-)	► 2 B- / (B-Line)

2. Insert the plug into socket A on the inverter.
3. If no further inverter connected, terminate the inverter:
   Connect socket A on the Santerno Solar-Log™ data cable to the plug of the first Santerno inverter data cable.

Connect the inverters to each other

- Shielded, 2-wire data cable with 9-pin connector.
- Where to connect: 9 pin socket on the outside of the housing floor.

Procedure

1. Insert the Santerno inverter data cable plug into socket B of the first inverter.
2. Insert the Santerno inverter data cable plug into socket C of the first inverter.
3. Insert the plug on the other end of the cable into socket C of the second inverter.
4. Connect the other inverters to each other using socket C.
5. Terminate the last inverter.
   Connect socket A on the Santerno Solar Log™ data cable to the plug of the first Santerno data cable.

Allocate communication address

- Recommendation: Continuous numbering starting with 1.
- Setting: Using the inverter display
- Procedure: Start according to the inverter's instructions

83 Schneider Electric

83.1 Schneider Electric SunEzy

Termination	Addressing	Interface
Yes	No	RS422

Select „Schneider Electric: SunEzy“ during device detection.

Supported models:

- SunEzy:
  400E, 600E, 2001, 2800, 2801, 3000, 3043, 4043, 4065, 4665, 6065

Overview

- Interface not integrated; Retrofit RS485 interface board.
- 4-pin cable – only at the RS422 interface.
- Communication address does not have to be assigned.
- Multi-string technology.

The inverters are fitted with 1 or 3 MPP trackers depending on the model. Each string input is monitored separately and ideally adjusted to the connected modules.

The Solar-Log™ automatically detects how many inverters and strings are active during inverter detection.

Note

The order in which the inverters are displayed in the Solar-Log™ after detection is random. We strongly recommend that you change the order of the inverters immediately after detection at startup in the Configuration | Device | Configuration | Order menu box.

► The inverters can be identified using the displayed serial number.

- Installation steps:
  - Switch off the inverters and Solar-Log™.
  - Install the RS485 interface in the inverter.
  - Connect inverters to the Solar-Log™.
  - Connect the inverters to each other.

Installing the RS485 interface

Procedure

► Insert the RS485 interface in the bottom of the inverter in accordance with the interface board installation instructions and screw in.

Connect inverters to the Solar-Log™

The wiring is done using a

- self-made, shielded 4 wire data cable.

Note

Only connect inverter using the RS422 interface.

Procedure

1. Open the inverter as shown in the inverter's instructions.
2. Pull the free wires through the wire opening in the inverter.
3. If you are making the cable yourself, connect the wires as shown in the following diagram:

Solar-Log™ Base RS422	Inverter terminal strip
Terminal	Terminal
► 6 (T/RX+)	► R+
► 9 (T/RX-)	► R-
► 10 (R/TX+)	► T+
► 13 (R/TX-)	► T-

4. If no further inverter is connected, terminate the inverter according to the instructions for the inverter.
5. Close the inverter if no other inverters are to be connected.

Connect the inverters to each other

- Connect using a 4 wire, shielded data cable
- Where to connect: Terminal strip inside the inverter (on the retrofitted RS485 interface)

Procedure

1. Open the inverter as shown in the inverter's instructions.
2. Connect terminals R+, R-, T+ and T- of inverter 1 to the corresponding terminals on inverter 2.
3. Connect the other inverters to each other in the same way.
4. Terminate the last inverter according to the inverter instructions.
5. Close inverters.

83.2 Schneider Electric Xantrex GT30E

Termination	Addressing	Interface
-	No	Sub D9 socket

Select „Schneider Electric: XantrexGT30E“ during device detection.

Overview

- Integrated interface
- Where to connect: Sub D 9 socket X51 inside the inverter.
- 2-pin wiring
- Communication address must be allocated to the inverter.
- Installation steps
  - Switch off the inverters and Solar-Log™
  - Connect inverters to the Solar-Log™
  - Connect the inverters to each other

Connect inverters to the Solar-Log™

The wiring is done using a

- ready-made data cable (optional extra; not supplied).
- self-made, shielded 2 wire data cable.

Procedure:

1. Open the inverter as shown in the inverter's instructions.
2. If you are making the cable yourself, connect the wires as shown in the following diagram:

Solar-Log™ Base RS485 (A) / (B)	Inverters
Terminal	Sub D9 socket X51
► (A) 6 or (B) 10 (Data+)	► 8
► (A) 9 or (B) 13 (Data-)	► 6

3. Close the inverter if no other inverters are to be connected.

Connect the inverters to each other

- Connect using a 2 wire, shielded data cable
- Where to connect: Sub D 9 socket X51 inside the inverter.

Procedure

1. If you are making the cable yourself, connect the wires as shown in the following diagram

Solar-Log™ Base RS485 (A) / (B)	Inverters
Terminal	Sub D9 socket X51
► (A) 6 or (B) 10 (Data+)	► 8
► (A) 9 or (B) 13 (Data-)	► 6

2. Connect the other inverters to each other in the same way (1:1).
3. Close the inverter if no other inverters are to be connected.

83.3 Schneider Electric Conext

Termination	Addressing	Interface
-	Yes	RS485

Select „Schneider Electric: Conext CL/RL/TL“ during device detection.

Supported models:

- Conext CL:
  18000 NA, 20000, 25000, 25000 NA
- Conext RL:
  3000, 4000, 5000
- Conext TL:
  8000, 10000, 15000, 20000

Overview

- Integrated interface.
- Where to connect: RJ45 socket on the outside of the inverter.
- 3-pin wiring.
- Communication address must be allocated.
- Installation steps:
  - Allocate communication address.
  - Switch off the inverters and Solar-Log™.
  - Connect inverters to the Solar-Log™.
  - Connect the inverters to each other.

Connect inverters to the Solar-Log™

The wiring is done using a

- self-made cable connection with RS485 data cable.

Procedure

1. Open the inverter as shown in the inverter's instructions.
2. Insert the RJ45 plug into any RJ45 socket on the first inverter.
3. If you are making the cable yourself, connect the wires as shown in the following diagram:

Solar-Log™ Base RS485 (A) / (B)	Inverters
Terminal	PIN
► (A) 6 or (B) 10 (Data+)	► 4
► (A) 8 or (B) 12 GND	► 8
► (A) 9 or (B) 13 (Data-)	► 5

4. If only one inverter is to be connected this must be terminated.
5. Close the inverter if no other inverters are to be connected.



Caution

Risk of damage to the unit!
The Solar-Log™ also has an RJ45 socket, which must never be connected to the RJ45 socket on the inverter.

► Only connect inverters via the RS485/422 Solar-Log™ interface(s).

Connect the inverters to each other

- Connect using a network cable (patch cable).
- Where to connect: 2 RJ45 sockets.

Procedure

1. Open the inverter as shown in the inverter's instructions.
2. Insert the RJ45 plug into any RJ45 socket on the first inverter.
3. Insert the other end of the wire into any RJ45 socket on inverter 2.
4. Connect the other inverters to each other in the same way.
5. Terminate the last inverter in accordance with the manufacturer's specifications.
6. Close the inverter if no other inverters are to be connected.

83.4 Schneider Electric Conext Sunspec (RS485)

Termination	Adressing	Interface
Switch	Yes	RS485

Select „Schneider Electric: Conext Sunspec“ during device detection.

Supported models:

- CL60A, CL60E, CL125

Overview

- Integrated interface
- Where to connect: RJ45 socket on the outside of the inverter
- 3-pin wiring
- Communication address must be allocated
- Installation steps
  - Allocate communication address
  - Switch off the inverters and Solar-Log™
  - Connect inverters to the Solar-Log™
  - Connect the inverters to each other

Connect inverters to the Solar-Log™

The wiring is done using a

- self-made cable connection with RS485 data cable.

Procedure

1. Open the inverter as shown in the inverter‘s instructions.
2. Insert the RJ45 plug into RJ45-Out socket on the first inverter.
3. If you are making the cable yourself, connect the wires as shown in the following diagram:

Solar-Log™ Base RS485 (A) / (B)	Inverter RS485
Terminal	Pin
► (A) 6 or (B) 10 (Data+)	► A+
► (A) 8 or (B) 12 GND	► GND
► (A) 9 or (B) 13 (Data-)	► B-

4. If no further inverter is connected, terminate the inverter according to the instructions for the inverter.
5. Close the inverter if no other inverters are to be connected.



Caution

Risk of damage to the unit!
The Solar-Log™ also has an RJ45 socket, which must never be connected to the RJ45 socket on the inverter.

► Only connect inverters via the RS485/422 Solar-Log™ interface(s).

Connect the inverters to each other

- Connect using a network cable (patch cable).
- Where to connect: 2 RJ45 sockets.

Procedure

1. Open the inverter as shown in the inverter‘s instructions.
2. Insert the RJ45 plug into the RJ45 out socket on the first inverter.
3. Insert the other end of the cable into the RJ45 in socket on second inverter.
4. Connect the other inverters to each other in the same way.
5. Terminate the last inverter in accordance with the manufacturer‘s specifications.
6. Close the inverter if no other inverters are to be connected.

Assign the communication address

- Recommendation: Continuous numbering starting with 1 (address range 1 to 247).
- Setting: Using the inverter‘s display.
- Procedure: Start according to the inverter‘s instructions.

83.5 Schneider Electric Conext CL60 Sunspec (Ethernet)

Termination	Adressing	Interface
No	Yes	Ethernet

Select „Schneider Electric: Conext Sunspec“ during device detection.

Supported models:

- CL60A, CL60E

Overview

- Integrated interface.
- The inverter‘s IP address has to be assigned.
- Connected using network cable (patch cable) and Ethernet router or switch.
- Installation steps:
  - The inverter‘s has to be assigned a static IP address.
  - Switch off the inverters and Solar-Log™.
  - Connect inverters to the Solar-Log™ (RJ45).
  - Connect the inverters to each other (RJ45).

Connect inverters to the Solar-Log™

The wiring is done using a

- network cable (patch cable) and the
- Ethernet router or switch.

Connect the inverters to each other

The inverters are connected together using
the RJ45 interface and, if needed, a router or switch.
Connection setup according to the inverter‘s instructions.

Assigning IP addresses

- A static IP address has to be assigned to the inverter via the display.
- Please select an IP address with the same class C subnet as the Solar-Log™.
  For example: The Solar-Log™ has the IP address 192.168.178.49.
  The inverter in this case has to have a free IP address in the same range (from 192.168.178.1 to 192.168.178.254).
- Procedure: Start according to the inverter‘s instructions

Detection via the Solar-Log™ WEB Interface

- For detection on the Solar-Log™ , select the device class under the menu Configuration | Device | Definition | Interface with the plus symbol and then select Schneider as the manufacturer. Confirm your selection with OK.
- Save your selections and then start the Device Detection under Configuration | Device | Detection.

84 Schüco

84.1 Schüco IPE CN series

Termination	Addressing	Interface
Terminating plug	Yes	RS485

Select „Refusol“ during device detection.

Supported models:

- IPE 010 CN 04, IPE 013 CN 04, IPE 017 CN 04, IPE 020 CN 04

Overview

- Integrated interface.
- Where to connect: RJ45 socket on the bottom of the inverter.
- 2-pin wiring.
- Communication address must be allocated.
- Installation steps
  - Switch off the inverters and Solar-Log™.
  - Connect inverters to the Solar-Log™.
  - Connect the inverters to each other.
  - Allocate communication address.

Note

To use active and reactive power management, all of the inverters need to be set to:

► Protocol 1
► 57600 baud
► Parameter 1164 = 2

Connect inverters to the Solar-Log™

The wiring is done using a

- self-made, shielded 2 wire data cable.

Procedure

1. Connect wires as shown in the diagram below.

Solar-Log™ Base RS485 (A) / (B)	RS485 inverter socket
Terminal	PIN
► (A) 6 or (B) 10 (Data+)	► 2
► (A) 9 or (B) 13 (Data-)	► 3

2. If no further inverter connected, terminate the inverter:
   On the sockets „RS485 OUT“ with REFUSOL round plugs bypass the connections PIN1 to PIN2 and PIN3 to PIN4.
3. Close the inverter if no other inverters are to be connected.

Connect the inverters to each other

- Connect using
  - 2-wire, shielded data cable and
  - 4-pin „SACC-M12MS-4SC“ plug.
- Where to connect: RS485 sockets on the bottom of the inverter.

The RS485 IN and OUT sockets are each double connections so that the wiring can be continued to the next inverter.

Procedure

1. Connect the data cable to the „SACC-M12MS-4SC“ plug as shown in the inverter‘s instructions.
2. Insert one plug into the OUT (X14B) socket of inverter 1.
3. Insert the other end of the wire into the IN socket (X15B) on inverter 2.
4. Connect the other inverters to each other in the same way.
5. Terminate the last inverter.
   On the sockets „RS485 OUT“ with REFUSOL round plugs bypass the connections PIN1 to PIN2 and PIN3 to PIN4.
6. Close inverters.

Allocate communication address

- Recommendation: Continuous numbering starting with 1; highest possible address: 31.
- Procedure: Start according to the inverter‘s instructions.

84.2 Schüco IPE CT series

Termination	Addressing	Interface
DIP switch	Yes	RS485

Select „Bonfiglioli“ during device detection.

Supported models:

- IPE CT

Overview

- Integrated interface.
- Where to connect: Terminal strip inside the inverter.
- 3-pin wiring.
- Communication address must be allocated.
- Installation steps
  - Switch off the inverters and Solar-Log™.
  - Connect inverters to the Solar-Log™.
  - Connect the inverters to each other.
  - Allocate communication address.

Connect inverters to the Solar-Log™

The wiring is done using a

- self-made, shielded 3 wire data cable.

Procedure

1. Get access to the inverter interface.
2. If you are making the cable yourself, connect the wires as shown in the following diagram:

Solar-Log™ Base RS485 (A) / (B)	Terminal strip inside the inverter
Terminal	RS485 terminal
► (A) 6 or (B) 10 (Data+)	► 1 A (Data+)
► (A) 8 or (B) 12 GND	► 6 GND
► (A) 9 or (B) 13 (Data-)	► 3 B (Data-)

3. If no further inverter connected, terminate the inverter:
   In the inverter, set the DIP switch S1 for the terminal resistor to ON.

Connect the inverters to each other

- Where to connect: Terminal strip on the inverter.
- 3-pin wiring.

Procedure

1. Get access to the inverter interface.
2. If you are making the cable yourself, connect the wires as shown in the following diagram:

Terminal strip inside the inverter	Terminal strip inside the inverter
RS485 terminal	RS485 terminal
► 1 A (Data+)	► 2 A (Data+)
► 6 GND	► 6 GND
► 3 B (Data-)	► 4 B (Data-)

3. Connect terminals on inverter 1 to the corresponding terminals on inverter 2.
4. Connect the other inverters to each other in the same way.
5. Terminate the last inverter.
   Set the DIP S1 switch for the terminal resistor to ON.

Allocate communication address

- Recommendation: Continuous numbering starting with 1 going to 30
- Procedure: Start according to the inverter's instructions



Note

A maximum of 20 inverters can be connected per RS485 bus.

84.3 Schüco IPE SN series

Termination	Addressing	Interface
Yes	Yes	RS485

Select „Sunways“ during device detection.

Supported models:

- IPE SN 05

Overview

- Integrated interface.
- Where to connect: Terminal strip inside the inverter.
  - 750 V models: 4 RS485 terminals on 10 pin terminal strip.
  - 850 V models: 4 pin RS485 terminal strip.
- 2-pin wiring.
- Communication address must be allocated.
- Installation steps:
  - Switch off the inverters and Solar-Log™.
  - Connect inverters to the Solar-Log™.
  - Connect the inverters to each other.
  - Allocate communication address.

Connect inverters to the Solar-Log™

The wiring is done using a

- self-made, shielded 2 wire data cable.

Procedure

1. Open the inverter as shown in the inverter‘s instructions.
2. Pull the free wires through the wire opening in the inverter.
3. If you are making the cable yourself, connect the wires as shown in the following diagram:

Solar-Log™ Base RS485 (A) / (B)	Inverter terminal strip
Terminal	Terminal
► (A) 6 or (B) 10 (Data+)	► RS485+
► (A) 9 or (B) 13 (Data-)	► RS485-

4. If no further inverter is connected, terminate the inverter according to the instructions for the inverter.
5. Close the inverter if no other inverters are to be connected.

Connect the inverters to each other

- Connect using a 2 wire, shielded data cable
- Where to connect: Terminal strip inside the inverter
  - 750 V models: 4 RS485 terminals on 10 pin terminal strip
  - 850 V models: 4 pin RS485 terminal strip

The RS485 connections on the terminal strip are each double connections so that the wiring can be continued to the next inverter.

Procedure

1. Open the inverter as shown in the inverter's instructions.
2. Connect terminals RS485+ and RS485- on all inverters to the two data cable wires in accordance with the inverter instructions.
3. Terminate the last inverter in accordance with the inverter instructions.
4. Close inverters.

Allocate communication address

- Recommendation: Continuous numbering starting with 1.
- Setting: Using the inverter display.
- Procedure: Start according to the inverter's instructions.

84.4 Schüco SGI series (RS485)

Termination	Addressing	Interface
Terminating plug	Yes	RS485

Select „Schüco“ during device detection.

Supported models:

- SGI9k, SGI10k, SGI13.5k-T, SGI12k, SGI15k-T, SGI25k, SGI25k-02Home, SGI30k, SGI30k-02Home, SGI33k, SGI33k-02Home, SGI1500T, SGI1500Tplus-02, SGI2000, SGI2000plus-02, SGI2500, SGI2500plus-02, SGI2500Tplus-02, SGI3000, SGI3000plus-02, SGI3500, SGI3500plus-02, SGI3500T, SGI3500Tplus-02, SGI4000, SGI4000plus-02, SGI4000Tplus-02, SGI4500, SGI4500plus-02, SGI4500T, SGI4500Tplus-02, SGI5500, SGI5500plus-02

Overview

- Integrated interface.
- Where to connect: RJ45 socket on the bottom of the inverter.
- 2-pin wiring.
- Communication address must be allocated.
- Installation steps:
  - Switch off the inverters and Solar-Log™.
  - Connect inverters to the Solar-Log™.
  - Connect the inverters to each other.
  - Allocate communication address.

Connect inverters to the Solar-Log™

The wiring is done using a

- self-made cable connection with RS485 data cable.



Caution

Risk of damage to the unit!
The Solar-Log™ also has an RJ45 socket, which must never be connected to the RJ45 socket on the inverter.

► Only connect inverters via the RS485/422 Solar-Log™ interface(s).

Procedure

1. If you are making the cable yourself, connect the wires as shown in the following diagram:

Solar-Log™ Base RS485 (A) / (B)	RJ45 inverter
Terminal	PIN
► (A) 6 or (B) 10 (Data+)	► 3 (A)
► (A) 9 or (B) 13 (Data-)	► 6 (B)

2. Open the unit cover on the bottom of the inverter.
3. Insert the RJ45 plug into the RJ45 socket on the inverter.
4. If no further inverter connected, terminate the inverter:
   Insert the IP20 terminal plug into a free RJ45 socket (not strictly required for cables up to 100 m long).
5. Close the unit cover on the bottom of the inverter.

Connect the inverters to each other

- Connect using a network cable (patch cable).
- Where to connect: RJ45 sockets on the bottom of the inverter.

Procedure

1. Open the unit cover on the bottom of the inverter.
2. Insert the RJ45 plug into any RJ45 socket on inverter 1.
3. Insert the other end of the wire into any RJ45 socket on inverter 2.
4. Connect the other inverters to each other in the same way.
5. Terminate the last inverter.
   Insert the IP20 terminal plug into a free RJ45 socket (not strictly required for cables up to 100 m long).
6. Close the unit cover on the bottom of the inverter.

Allocate communication address

- Recommendation: Continuous numbering starting with 1.
- Setting: Using the inverter display.
- Procedure: Start according to the inverter's instructions.

85 Shindengen

85.1 Shindengen

Termination	Addressing	Interface
Yes	Yes	RS485

Select „Shindengen“ during device detection.

Supported models:

- PVS005T200, PVS010S200, PVS010T200, PVS9R9T200, PVS100T200A-DN-SA-S

Overview

- Integrated interface
- Where to connect: Terminal strip inside the inverter
- 3-pin wiring
- Communication address must be allocated.
- Installation steps
  - Switch off the inverters and Solar-Log™
  - Connect inverters to the Solar-Log™
  - Connect the inverters to each other
  - Allocate communication address

Connect inverters to the Solar-Log™

The wiring is done using a

- self-made, shielded 3 wire data cable.

Procedure

1. Open the inverter as shown in the inverter’s instructions.
2. If you are fabricating the cable yourself, connect the wires as shown in the following diagram:

Solar-Log™ Base RS485 (A) / (B)	Terminal strip inside the inverter
Terminal	RS485 terminal
► (A) 6 or (B) 10 (Data+)	► 30 A (+)
► (A) 8 or (B) 12 GND	► 31 GND
► (A) 9 or (B) 13 (Data-)	► 13 B (-)

3. If no further inverter is connected, terminate the inverter according to the instructions for the inverter.
4. Close inverters.

Connect the inverters to each other

- Where to connect: Terminal strip inside the inverter.
- 3-pin wiring.

Procedure

1. Open the inverter as shown in the inverter's instructions.
2. If you are fabricating the cable yourself, connect the wires as shown in the following diagram.

Terminal strip inside the inverter	Terminal strip inside the inverter
RS485 terminal	RS485 terminal
► 30 A (+)	► 30 A (+)
► 31 GND	► 31 GND
► 13 B (-)	► 13 B (-)

3. Connect terminals on inverter 1 to the corresponding terminals on inverter 2.
4. Connect the other inverters to each other in the same way.
5. If no further inverter is connected, terminate the inverter according to the instructions for the inverter.
6. Close inverters.

Allocate communication address

- Recommendation: Continuous numbering from 1 to 30
- Procedure: Start according to the inverter's instructions.



Note

A maximum of 30 inverters can be connected per RS485 bus.

86 SIEL

86.1 SIEL (single phase)

Termination	Addressing	Interface
Yes	Yes	RS485

Select „SIEL“ during device detection.

Supported models:

- Soleil 1F (1-phasig) 1.5, 3, 2, 4, 4.6, 6
- Soleil 10 TL
- Soleil M 1.5, 2, 3, 4, 5, 6

Overview

- Interface not integrated; Retrofit RS485 interface board.
- 2-pin wiring.
- The communication address has to be assigned.
- Installation steps:
  - Allocate communication address.
  - Switch off the inverters and Solar-Log™.
  - Install the RS485 interface in the inverter.
  - Connect inverters to the Solar-Log™.
  - Connect the inverters to each other.

Allocate communication address

- Recommendation: Continuous numbering starting with 1.
- Setting: Using the DIP switch on the interface board.

Before installing the RS485 interface board:

► Allocate the communication address using the 8 interface board DIP switches:

Example - Communication address 1:



Example - Communication address 2:



Example - Communication address 3:



Example - Communication address 4:



Example - Communication address 5:

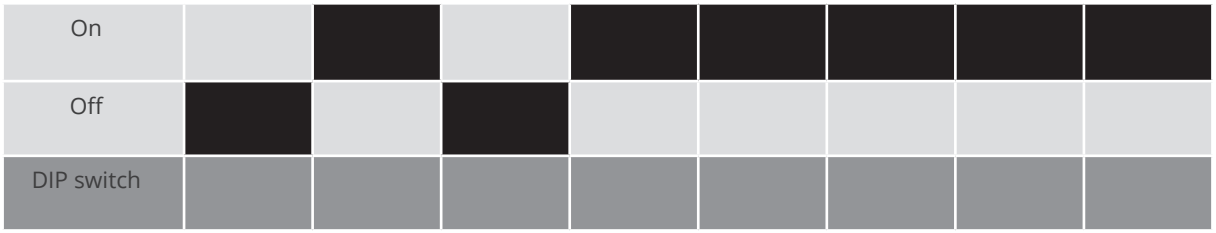

You will find more information at:
http://en.wikipedia.org/wiki/Binary_number

Installing the RS485 interface

Procedure

► Install the RS485 interface in the inverter in accordance with the interface board installation instructions.

Connect inverters to the Solar-Log™

The wiring is done using a

- self-made, shielded 2 wire data cable.

Procedure

1. Open the inverter according to the inverter's instructions.
2. If you are fabricating the cable yourself, connect the wires as shown in the following diagram:

Solar-Log™ Base RS485 (A) / (B)	Inverter terminal strip
Terminal	Terminal
► (A) 6 or (B) 10 (Data+)	► R+
► (A) 9 or (B) 13 (Data-)	► R-

3. If no further inverter is connected, terminate the inverter according to the instructions for the inverter.
4. Close the inverter if no other inverters are to be connected.

Connect the inverters to each other

- Connect using a 2-wire, shielded data cable.
- Where to connect: Terminal strip inside the inverter on the retrofitted RS485 interface board

Procedure

1. Open the inverter according to the inverter's instructions.
2. Connect terminals T+ and T-on inverter 1 to terminals R+ and R- on inverter 2.

Terminal strip connection inverter 1	Terminal strip inverter 2
Terminal	Terminal
► T+	► R+
► T-	► R-

3. Connect the other inverters to each other in the same way.
4. Terminate the last inverter in accordance with the inverter instructions.
5. Close the inverter.

86.2 SIEL (3-phase)

Termination	Addressing	Interface
Yes	Yes	RS485

Select „SIEL“ during device detection.

Supported models:

- Soleil 3F (3-phase) 10, 15, 20
- DSP (only in connection with the SIEL SCB and a valid license)

Overview

- Interface not integrated; Retrofit RS485 interface board.
- 3-pin wiring.
- The communication address has to be assigned.
- Installation steps:
  - Allocate communication address.
  - Switch off the inverters and the Solar-Log™.
  - Install the RS485 interface in the inverter
  - Connect the inverters to the Solar-Log™.
  - Connect the inverters to each other.

Allocate communication address.

- Start according to the inverter‘s instructions.

Installing the RS485 interface

Procedure

► Install the RS485 interface in the inverter in accordance with the interface board installation instructions.

Connect the inverters to the Solar-Log™.

The wiring is done using a

- self-made, shielded 3-wire data cable.

Procedure

1. Open the inverter according to the inverter‘s instructions.
2. If you are making the cable yourself, connect the wires as shown in the following diagram:

Solar-Log™ Base RS485 (A) / (B)	Inverter terminal strip
Terminal	Terminal
► (A) 6 or (B) 10 (Data+)	► 27 Data+
► (A) 8 or (B) 12 GND	► 30 GND
► (A) 9 or (B) 13 (Data-)	► 28 Data-

3. If no further inverter is connected, terminate the inverter according to the instructions for the inverter
4. Close the inverter if no other inverters are to be connected.

Connect the inverters to each other.

- Connect the wires according to the inverter‘s instructions.

86.3 SIEL - SPX / SRT series

Termination	Adressing	Interface
-*	Yes**	RS485

Select „SIEL“ during device detection.

Supported models:

- SRT 20K-S2, SRT 30K-S2, SRT 40K-S2, SRT 60K-S2, SRT 100K, SRT 125K, SPX 350K, SPX 250K-S1, SPX 250K-S2

Overview

- Integrated interface.
- Where to connect: Wiring box on the inverter.
- 2-pin wiring.
- Communication address must be allocated**. (See the inverter manufacturer‘s instructions)
- Installation steps:
  - Switch off the inverters and Solar-Log™.
  - Connect inverters to the Solar-Log™.
  - Connect the inverters to each other.
  - Allocate a communication address in accordance with the inverter manufacturer‘s instructions.

Connect inverters to the Solar-Log™

The wiring is done using a

- self-made, shielded 2 wire data cable.

Procedure

1. Open the inverter as shown in the inverter‘s instructions.
2. If you are making the cable yourself, connect the wires as shown in the following diagram:

Solar-Log™ Base RS485 (A) / (B)	Terminal strip inside the inverter
Terminal	RS485 Terminal
► (A) 6 or (B) 10 (Data+)	► +
► (A) 9 or (B) 13 (Data-)	► -

3. If no further inverter is connected, terminate the inverter according to the instructions for the inverter*.
4. Close the inverter if no other inverters are to be connected.

Connect the inverters to each other

- Where to connect: Terminal strip inside the inverter.
- 2-pin wiring.
- Wiring according to the inverter manufacturer‘s instructions.

Note

The baud rate of the inverter must be set via the SIEL monitoring software WiseEnergy (see the WiseEnergy user manual). The default baud rate is 9600.

The communication address of the inverter is set in binary mode via the selector switch SW1 on the communication board, e.g. if the selector switch SW1 is set to „000001 (from left to right, ON is 1, OFF is 0)“, this means that the communication address of the inverter is set to „000001“.
If in doubt, please contact the manufacturer.

Very important!

For the connection of the devices of the respective manufacturer, please observe the manufacturer‘s documentation in the respective valid version.

87 Siemens

87.1 Siemens

Termination	Addressing	Interface
Resistor	Yes	RS485

Note

The same protocol must be selected on both devices In order to ensure correct communication between the Solar-Log™ and the inverters.

Supported models:

- Sinvert PVM10, Sinvert PVM13, Sinvert PVM17, Sinvert PVM20

Protocol selection for device detection:

- RefuSol: Native (for PM control)
- RefuSol: Generic

Overview

- Integrated interface.
- Where to connect: RJ45 socket on the bottom of the inverter.
- 2-pin wiring.
- Communication address must be allocated.
- Installation steps:
  - Switch off the inverters and Solar-Log™.
  - Connect inverters to the Solar-Log™.
  - Connect the inverters to each other.
  - Allocate communication address.

Connect inverters to the Solar-Log™

To connect the Solar-Log™ and the inverters prepare cables with the following pin allocation.

Connecting the Solar-Log™ to the first inverter

Solar-Log™ Base RS485 (A) / (B)	First inverter - RS485 IN (4-pin round plug)
Terminal	
► (A) 6 or (B) 10 (Data+)	► Pin 2
► (A) 9 or (B) 13 (Data-)	► Pin 3

If no further inverter connected, terminate the inverter (see following item "Bus termination").

Connect the inverters to each other

Inverters must be connected to each other using shielded data cables via the RS485 connections located on the SINVERT PVM.
The following illustration shows the main connection diagram.

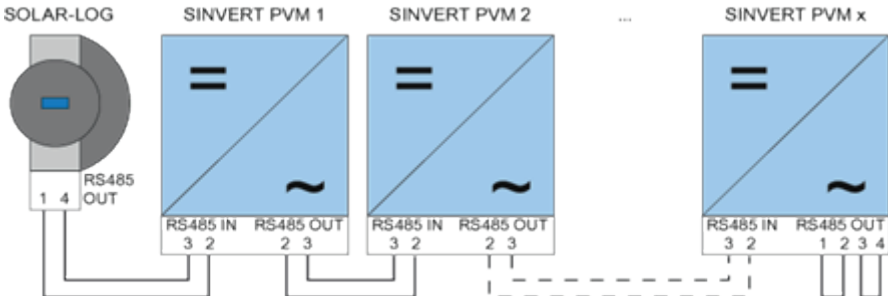

Fig.: Siemens – connecting inverters together (Source: Siemens)

Use the SACC-M12MS-4SC connectors supplied with the inverter for data cables.

1. Connect them as shown in the diagram.
2. Connect the bus cable on the last inverter to the RS45 OUT socket using a terminal resistor.

Inverter - RS485 OUT (4-pin round plug)	Inverter - RS485 IN (4-pin round plug)
► Pin 2	► Pin 2
► Pin 3	► Pin 3

Bus termination

The bus must be terminated on the RS485 OUT connection of the last inverter with 120Ω.
To do this use the internal 120 Ω resistor and wire the following pins in a round 4-pin plug with two jumpers.

Inverter - RS485 OUT (4-pin round plug)	
► Pin 1	► Pin 2
► Pin 3	► Pin 4

3. Insert this plug into the RS485 OUT socket of the last inverter.

Setting parameters

- Parameters are set using the display on the inverter.
- The date and time must be correctly set and the password "72555" entered before the communication settings.
- The communication parameters are set in the sub-menu
  "F1 -> Configuration -> Communication -> RS 485."
- The individual menu items are selected with the arrow keys ↑↓ and confirmed by pressing ENTER.
- A consecutive communication address must be allocated to each SINVERT PVM. It is advisable to arrange the addresses consecutively beginning with 1, i.e. 1, 2, 3 up to a maximum of 31. The Solar-Log™ has address "0".
- The baud rate should be set to 57600.

How to set communication address parameters

1. Select "USS address" and press ENTER.
2. Enter the numerical value xx [Address] and press ENTER.
3. Select "Baud rate" and press ENTER.
4. Enter the numerical value [Baud rate] and press ENTER.
5. Select "Protocol" and press ENTER.
6. Select protocol type "1" and press ENTER.

After the parameters have been set on the display the inverter must be switched off for one minute using the installed DC isolation switch. The settings are now applied and set to active. The configuration procedure is described in the manufacturer's handbook.

Solar-Log™ compatibility with older PVM installations

With older Solar-Log™ / PVM installations the inverter had to be set with additional parameters for Solar-Log™ compatibility. This is only still necessary if an inverter has been replaced because it was faulty or if the system has been extended. Only in these cases must the additional parameters be set again on the new inverters.



Note

A maximum of 31 inverters can be connected per RS485 bus.

88 Siliken

88.1 Siliken Central inverters

Termination	Addressing	Interface
No	Yes	Ethernet

Select „Siliken“ during device detection.

Supported models:

- SE 85i

Overview

- Integrated interface.
- The inverter‘s IP address has to be assigned.
- Connected using network cable (patch cable) and Ethernet router or switch.
- Installation steps:
  - The inverter‘s has to be assigned a static IP address.
  - Switch off the inverters and Solar-Log™.
  - Connect inverters to the Solar-Log™ (RJ45).
  - Connect the inverters to each other (RJ45).

Connect inverters to the Solar-Log™

The wiring is done using a

- network cable (patch cable) and the
- Ethernet router or switch.

Connect the inverters to each other

The inverters are connected together using
the RJ45 interface and, if needed, a router or switch.
Connection setup according to the inverter‘s instructions.

Assigning IP addresses

- A static IP address has to be assigned to the inverter via the display.
- Please select an IP address with the same class C subnet as the Solar-Log™.
  For example: The Solar-Log™ has the IP address 192.168.178.49.
  The inverter in this case has to have a free IP address in the same range (from 192.168.178.1 to 192.168.178.254).
- Procedure: Start according to the inverter‘s instructions.



Note

Each inverter has to be individually reachable via the network. For this, the network interface has to be activated for every inverter, according to the inverter‘s instructions, and the inverter needs to be connected to the local access network (LAN) via a switch.

Detection via the Solar-Log™ WEB Interface

- For detection on the Solar-Log™ , select the device class under the menu Configuration | Device | Definition | Interface with the plus symbol and then select Siliken as the manufacturer. Confirm your selection with OK.
- Save your selections and then start the Device Detection under Configuration | Device | Detection.

89 SiNeng

89.1 SiNeng CP/EP

Termination	Adressing	Interface
Yes	Yes	RS485

Select „Sineng; CP/EP“ during device detection.

Supported models:

- CP-1000-B, CP-1000-B-OD, CP-1000-B-OD/10, CP-1000-B-OD/35, CP-2000-B-OD, CP-2000-B-OD/35
- EP-0500-A,EP-0630-A,EP-1000-A, EP-1000-B, EP-1000-HA, EP-1250-HA, EP-1260-A-OD, EP-1260-A-OD/10, EP-1260-A-OD/35, EP-2000-A, EP-2500-AI-OD, EP-2500-HA-OD

Overview

- Integrated interface.
- Where to connect: Terminal block inside the inverter.
- 2-pin wiring.
- The communication address has to be assigned.
- Installation steps:
  - Switch off the inverters and the Solar-Log™.
  - Connect the inverters to the Solar-Log™.
  - Set the communication address according to the inverter‘s instructions.
  - Address range 1 - 247.
  - Terminate the inverter according to the inverter‘s instructions.

Connect the inverters to the Solar-Log™.

The wiring is done using a

- self-made, shielded 2-wire data cable and terminal block connector.

Procedure:

1. Open the inverter according to the inverter‘s instructions.
2. Connect the wires for the cable connection as shown in the following diagram:

Solar-Log™ Base RS485 (A) / (B)	Terminal strip inverter RS485 A
Terminal	PIN assignments for RS485 A
► (A) 6 or (B) 10 (Data+)	► 485A+
► (A) 9 or (B) 13 (Data-)	► 485A-

3. Terminate the inverter according to the inverter‘s instructions if no additional inverters are to be connected.
4. Close the inverter if no other inverters are to be connected.

Connect the inverters to each other

- Where to connect: Terminal block inside the inverter.
- Connect the inverters to each other according to the inverter instructions.

Assign the communication address

- Recommendation: Continuous numbering starting with 1.
- Setting: Using the inverter‘s display.
- Procedure: Start according to the inverter‘s instructions.

Detection via the Solar-Log™ WEB Interface

- For detection on the Solar-Log™, select the device class under the menu Configuration | Device | Definition | Interface with the plus symbol and then select SiNeng as the manufacturer, CP/EP as the type and the interface. Confirm your selection with OK.
- Save your selections and then start the Device Detection under Configuration | Device | Detection and start the device detection.

89.2 SiNeng SP

Termination	Adressing	Interface
Yes	Yes	RS485

Select „Sineng: SP“ during device detection.

Supported models:

- SP-8K, SP-10K, SP-12K, SP-20K, SP-40K, SP-40KLB, SP-50K, SP-50KLB, SP-60K, SP-60KLB, SP70KLB

Overview

- Integrated interface.
- Where to connect: Terminal block inside the inverter.
- 2-pin wiring.
- The communication address has to be assigned.
- Installation steps:
  - Switch off the inverters and the Solar-Log™.
  - Connect the inverters to the Solar-Log™.
  - Set the communication address according to the inverter‘s instructions.
  - Address range 1 - 247.
  - Terminate the inverter according to the inverter‘s instructions.

Connect the inverters to the Solar-Log™.

The wiring is done using a

- self-made, shielded 2-wire data cable.

Procedure:

1. Open the inverter according to the inverter‘s instructions.
2. Connect the wires for the cable connection as shown in the following diagram:

Solar-Log™ Base RS485 (A) / (B)	Terminal strip inverter RS485 A
Terminal	PIN assignments for RS485 A
► (A) 6 or (B) 10 (Data+)	► 485A+
► (A) 9 or (B) 13 (Data-)	► 485A-

3. Terminate the inverter according to the inverter‘s instructions if no additional inverters are to be connected.
4. Close the inverter if no other inverters are to be connected.

Note

The termination is carried out via a software tool, please observe the instructions in the inverter manual.

Connect the inverters to each other

- Where to connect: Terminal block inside the inverter.
- Connect the inverters to each other according to the inverter instructions.

Assign the communication address

- Recommendation: Continuous numbering starting with 1.
- Setting: Via display (on the inverter) or via APP or via a software tool (please follow the inverter instructions).
- Procedure: Start according to the inverter's instructions.

Detection via the Solar-Log™ WEB Interface

- For detection on the Solar-Log™, select the device class under the menu Configuration | Device | Definition | Interface with the plus symbol and then select SiNeng as the manufacturer, SP as the type and the interface. Confirm your selection with OK.
- Save your selections and then start the Device Detection under Configuration | Device | Detection and start the device detection.



Note

A maximum of 32 inverters can be connected per RS485 bus.

90 SMA

90.1 Overview

SMA inverters do not have an integrated RS485 interface.

However, the following RS485 interfaces can be retrofitted
to SMA inverters:

- Special RS485 piggyback card (by Solar-Log GmbH)
- Original SMA RS485 piggyback card (by SMA)

Both piggyback cards can be installed in "Sunny Boy" inverters (except for 3000/4000/5000TL-20 next generation)
or
"Sunny Mini Central" by SMA. The SMA RS485 data module is required for the SMA -20 and Tripower inverters.

Special RS485 piggyback card

- Only use with Solar-Log™ devices.

Piggyback mixed mode

Inverters with special RS485 piggybacks and original SMA piggybacks or data modules can be used together.

A diagram for wiring in SMA combined mode can be found in the appendix.

90.2 SMA connection using special RS485 piggyback card

Termination	Addressing	Interface
Jumper	No	RS485

Select „SMA: Data1“ during device detection.

Supported models:

- Sunny Boy:
  700, 1100, 1200, 1300TL-10, 1600TL-10, 1700, 2500, 2800i, 3000, 3300, 3300-11, 3300TL HC, 3800, 3800-11, 4200TL HC, 5000TL-HC Multi-String
- Sunny Mini Central:
  4600A, 4600A-11, 5000A, 5000A-11, 6000A, 6000A-11, 6000TL, 7000HV, 7000HV-11, 7000TL, 8000TL, 9000TL-10, 9000TLRP-10, 10000TL-10, 10000TLRP-10, 11000TL-10, 11000TLRP-10

Overview

- Interface not integrated; retrofit the special RS485 piggyback card
- Where to connect: Terminal strip inside the inverter on the piggyback
- Communication address does not have to be assigned
- 4-pin wiring
- Installation steps
  - Switch off the inverters and Solar-Log™
  - Installing the special RS485 piggyback in inverters
  - Connect inverters to the Solar-Log™
  - Connect the inverters to each other

Installing the special RS485 piggyback in inverters

Procedure

1. Open the inverter as shown in the inverter's instructions.
2. The Piggy Back has to be installed on the inverter's circuit board aligned to the left side under the pin contract strip (Figure 3, left).
   The print "unten [down]" on the board has to be visible on the bottom left-hand side (Figure 3, right).

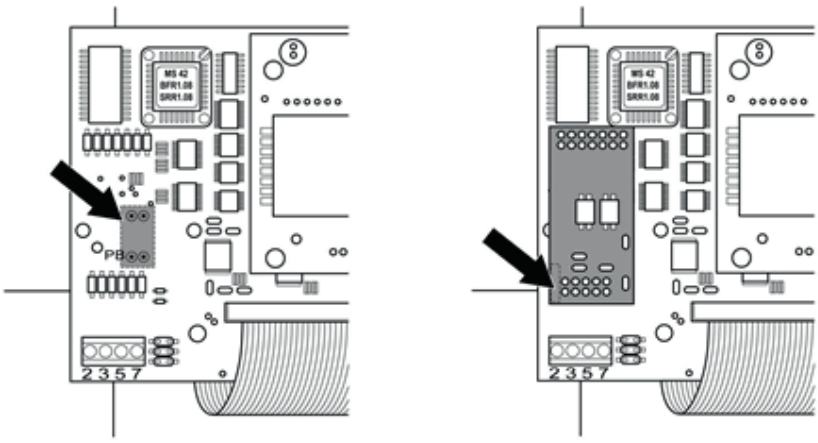

Fig.: Control board before and after installation of the piggyback (Source: SMA)

Note about the Special PiggyBack:

If the Special PiggyBack is used a 12V power supply unit must be used.

Connect inverters to the Solar-Log™

The wiring is done using a

- self-made, shielded 4-wire data cable.

Procedure

1. Pull the free wires through the wire opening in the inverter.
2. If you are making the cable yourself, connect the wires as shown in the following diagram:

Solar-Log™ Base RS485 (A) / (B)	Inverter terminal strip
Terminal	Terminal
► (A) 6 or (B) 10 (Data+)	► 2
► 12 V (see note previous page)	► 3
► (A) 8 or (B) 12 GND	► 5
► (A) 9 or (B) 13 (Data-)	► 7

3. Pull the wire in the inverter through the insulation sleeve attached to the piggy back.
   The wire must be enclosed in the insulating hose inside the inverter.
4. Ground the connection: Connect terminal 5 on the inverter to the inverter housing using the supplied flat strip connector.

If only one inverter is to be connected it must be terminated.

Put the supplied jumper onto the lower pins on the connector strip.

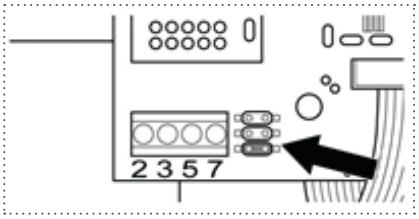

Fig.: Piggyback - insert jumper (Source: SMA)

5. Close the inverter if no other inverters are to be connected.

Connect the inverters to each other

- Connect using a 4 wire, shielded data cable (e.g. a 25 m ring cable, Solar-Log GmbH order 220014)
- Where to connect: Terminal block in inverter (on the retrofitted RS485 interface)

Procedure

1. Pull the wire in the inverter through the insulation sleeve attached to the piggy back
   The wire must be enclosed in the insulating hose inside the inverter.
2. Connect all 4 contacts (2, 3, 5, 7) on the terminal strip of inverter 1 to inverter 2.

Note

A diagram for wiring in SMA combined mode can be found in the appendix.

1. Connect the other inverters to each other in the same way.
2. Terminate the last inverter.
   Put the supplied jumper onto the lower pins on the connector strip.

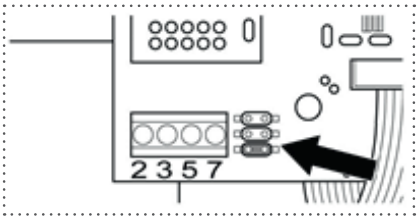

Fig.: Jumper SMA (Source: SMA)

3. Close inverters.

90.3 Connect SMA with original SMA RS485 piggy back and the SMA RS485 data module

Termination	Addressing	Interface
Resistor jumper	No	RS485

Select „SMA: Data1“ during device detection.

Supported models PiggyBack:

- Sunny Boy:
  700, 1100, 1200, 1300TL-10, 1600TL-10, 1700, 2100TL, 2500, 2800i, 3000, 3300, 3300-11, 3300TL HC, 3800, 3800-11, 4200TL HC, 5000TL-HC Multi-String
- Sunny Mini Central:
  4600A, 4600A-11, 5000A, 5000A-11, 6000A, 6000A-11, 6000TL, 7000HV, 7000HV-11, 7000TL, 8000TL, 9000TL-10, 9000TLRP-10, 10000TL-10, 10000TLRP-10, 11000TL-10, 11000TLRP-10

Supported models Data Modul:

- Sunny Boy:
  3.0-US, 3.8-US, 5.0-US, 6.0-US, 7.0-US, 7.7-US, 2000HF-30, 2500HF-30, 2500TLST-21, 3000HF-30, 3000TL-20, 3000TL-21, 3000TL-US-22, 3000TLST-21, 3600TL-21, 3800TL-US-22, 4000TL-20, 4000TL-21, 4000TL-US-22, 5000TL-20, 5000TL-21, 5000TL-US-22, 6000TL-US-22, 7000TL-US-22, 7700TL-US-22
- Sunny Tripower:
  5000TL-20, 6000TL-20, 7000TL-20, 8000TL-10, 8000TL-20, 9000TL-20, 10000TL-10, 10000TL-20, 12000TL-10, 12000TL-20, 12000TL-US-10, 15000TL-US-10, 15000TLEE-10, 17000TL-10, 20000TL-30, 20000TL-US-10, 20000TLEE-10, 24000TL-US-10, 25000TL-30, 30000TL-US-10

Overview

- Interface not integrated; retrofit the SMA RS485 piggyback card
- Where to connect: Terminal strip inside the inverter on the piggyback
- Communication address does not have to be assigned
- 3-pin wiring
- Installation steps
  - Switch off the inverters and Solar-Log™
  - Installing the original SMA RS485 piggyback in the inverter
  - Connect inverters to the Solar-Log™
  - Connect the inverters to each other

Installing the original SMA RS485 piggyback in the inverter

Procedure

► Install the original SMA RS485 piggy back in the inverter in accordance with the interface board installation instructions.

Connect inverters to the Solar-Log™

The wiring is done using a

- self-made, shielded 3 wire data cable.

Procedure

1. Open the inverter as shown in the inverter‘s instructions.
2. Pull the free wires through the wire opening in the inverter.
3. Pull the cable through the insulation tube.

Note

The wire must be enclosed in the insulating hose inside the inverter.

4. If you are making the cable yourself, connect the wires as shown in the following diagram:

Solar-Log™ Base RS485 (A) / (B)	Inverter terminal strip
Terminal	Terminal
► (A) 6 or (B) 10 (Data+)	► 2
► (A) 8 or (B) 12 GND	► 5
► (A) 9 or (B) 13 (Data-)	► 7

5. Ground the connection: Connect terminal 5 on the inverter to the inverter housing using the supplied flat strip connector.
6. If only one inverter is to be connected it must be terminated.
   Put the supplied jumper onto the lower pins on the connector strip.

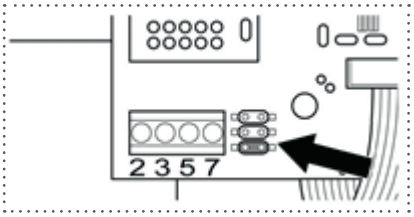

Fig.: Jumper SMA (Source: SMA)

7. Close the inverter if no other inverters are to be connected.

Connect the inverters to each other

- Connect using a 3 wire, shielded data cable.
- Where to connect: Terminal block in inverter (on the retrofitted RS485 interface)

Procedure

1. Open the inverter as shown in the inverter's instructions.
2. Connect the inverter in accordance with the inverter installation instructions.
3. If no further inverter connected, terminate the inverter:
   Put the supplied jumper onto the lower pins on the connector strip.

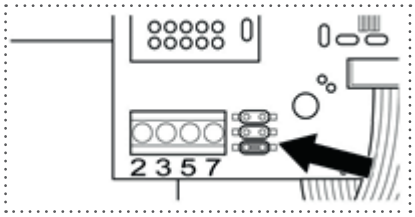

Fig.: Jumper SMA (Source: SMA)

4. Close inverters.

Note

A diagram for wiring in SMA combined mode can be found in the appendix.

90.4 SMA Meter Connection Box

An energy meter with S0 output can be connected to the SMA Meter Connection Box. The Meter Connection Box then converts the S0 signal to the RS485 Bus.

The Meter Connection Box is connected to the RS485 socket the same way as with the SMA inverter. In the course of the inverter detection, the Box is recognized as an inverter - SMA is to be selected.

The configuration is done in the Configuration | Devices | Configuration menu.

Procedure

- Perform detection.
- Select the respective number.
- Enter the generator power.
- Enter the pulse factor.
- Select the type of power meter.
- Save.

90.5 SMA - FLX series

Termination	Addressing	Interface
Connection plug	No	RS485

Select „Danfoss“ during device detection.

Supported models:

- FLX5 Pro, FLX6, FLX6 Pro, FLX7 Pro, FLX8, FLX8 Pro, FLX9 Pro, FLX10, FLX10 Pro, FLX12.5, FLX12.5 Pro, FLX15, FLX15 Pro, FLX17, FLX17 Pro

Overview

- Integrated interface.
- Where to connect: 2 RJ45 sockets on the right on the side cover.
- Communication address does not have to be assigned.
- 4-pin wiring.
- Installation steps:
  - Switch off the inverters and Solar-Log™.
  - Connect inverters to the Solar-Log™.
  - Connect the inverters to each other.

Connect inverters to the Solar-Log™

The wiring is done using a

- self-made cable connection with RS485 data cable.



Caution

The Master Mode has to be deactivated in the Pro series devices. See the manufacturer's manual for more detailed instructions.

Procedure

1. Unscrew the side cover as shown in the inverter‘s instructions.
2. If you are making the cable yourself, connect the wires as shown in the following diagram:

Solar-Log™ Base RS485 (A) / (B)	RJ45 inverter
Terminal	PIN
► (A) 6 or (B) 10 (Data+)	► 6 RX/TX B (+)
► (A) 8 or (B) 12 GND	► 1 GND
► (A) 9 or (B) 13 (Data-)	► 3 RX/TX A (-)



Caution

Risk of damage to the unit!
The Solar-Log™ also has an RJ45 socket, which must never be connected to the RJ45 socket on the inverter.

► Only connect inverters via the RS485/422 Solar-Log™ interface(s).

3. If no further inverter connected, terminate the inverter:
   Insert the supplied connection plug into any free RJ45 socket on the inverter.
   The connection plug is an 8-pin dummy plug with bridged wires: Bridge wires 3 and 4 and wires 5 and 6.
4. Screw the inverter cover on again.

Connect the inverters to each other

- Connect using a network cable (patch cable).
- Where to connect: 2 RJ45 sockets on the right on the side cover.

Procedure

1. Unscrew the side cover as shown in the inverter's instructions.
2. Insert the RJ45 plug into any RJ45 socket on inverter 1.
3. Insert the other end of the wire into any RJ45 socket on inverter 2.
4. Connect the other inverters to each other in the same way.
5. Terminate the last inverter.
   Insert the connection plug into the free RJ45 socket.
6. Screw the inverter cover on again.

90.6 SMA SOLID Q

Termination	Addressing	Interface
DIP switch	Yes	RS485

Select „SMA: SOLID-Q“ during device detection.

Supported model:

- SMA: SOLID-Q50

Overview

- Integrated interface.
- Where to connect: Terminal strip inside the inverter.
- 3-pin wiring.
- The communication address has to be assigned (1 - 250).
- Installation steps:
  - Switch off the inverters and Solar-Log™.
  - Connect inverters to the Solar-Log™.
  - Connect the inverters to each other.
  - Configure the inverter's communication interface.
  - Allocate communication address.

Note

To activate RS485 communication, the DIP switch on the inverter has to be set to RS485-HD.

Connect inverters to the Solar-Log™

The wiring is done using a

- self-made, shielded 3 wire data cable.

Procedure

1. Connect wires as shown in the diagram below:

Solar-Log™ Base RS485 (A) / (B)	Inverter terminal strip
Terminal	Terminal
► (A) 6 or (B) 10 (Data+)	► A PIN 1 (+)
► (A) 8 or (B) 12 GND	► GND PIN 3
► (A) 9 or (B) 13 (Data-)	► B PIN 2 (-)

2. If no further inverter is connected, terminate the inverter according to the instructions for the inverter. (Refer to the notes below)
3. Close the inverter cover if no other inverters are to be connected.

Connect the inverters to each other

The inverters are connected together using the RS485 interface. Refer to the manufacturer's inverter manual for the details on how to setup the connection.

Assign the communication address

- Recommendation: Continuous numbering starting with 1 going to 250.
- Setting: Using the inverter's display.
- Procedure:
  - Go to the main menu.
  - Select the menu Settings > Communication Settings.
  - Press „Enter."
  - Set the desired modbus address with the arrow keys.
  - Press „Enter" to apply the setting.
  - Press the ESC key to stop the process..

Note on the termination:

If only one inverter is connected, both DIP switches have to be set to OFF. When several inverters are connected, the both DIP switches for the last inverters have to be set to ON and both DIP switches for the other inverters to OFF.

90.7 SMA Speedwire

Note

The trademark "Speedwire" is registered trademark of SMA Solar Technology AG in many countries.

Termination	Addressing	Interface
No	Yes	Ethernet

Select “SMA: Speedwire“ during the device detection.

Supported models:

- Sunny Boy:
  1.5, 2.0, 2.5, 3.0, 3.0-US, 3.6, 3.8-US, 4.0, 5.0, 5.0-US, 6.0-US, 7.0-US, 7.7-US, 700, 1300TL-10, 1600TL-10, 2000HF-30, 2100TL, 2500HF-30, 2500TLST-21, 3000HF-30, 3000TL-20, 3000TL-21, 3000TL-US-22, 3000TLST-21, 3600TL-21, 3800TL-US-22, 4000TL-20, 4000TL-21, 4000TL-US-22, 5000TL-20, 5000TL-21, 5000TL-HC Multi-String, 5000TL-US-22, 6000TL-US-22, 7000TL-US-22, 7700TL-US-22
- Sunny Tripower:
  5000TL-20, 6000TL-20, 7000TL-20, 8000TL-10, 8000TL-20, 9000TL-20, 10000TL-10, 10000TL-20, 12000TL-10, 12000TL-20, 12000TL-US-10, 15000TL-US-10, 15000TLEE-10, 17000TL-10, 20000TL-30, 20000TL-US-10, 20000TLEE-10, 24000TL-US-10, 25000TL-30, 30000TL-US-10

Overview

- Integrated or retrofitted Speedwire interface.
- The inverter's IP address has to be assigned.
- Connected using network cable (patch cable) and Ethernet router or switch.
- Installation steps:
  - The inverter's has to be assigned a static IP address.
  - Switch off the inverters and Solar-Log™.
  - Connect inverters to the Solar-Log™ (RJ45).
  - Connect the inverters to each other (RJ45).

Retrofitting the inverter with a SMA Speedwire module

Procedure

► Install the original Speedwire module in the inverter according to the interface board installation instructions.

Connect inverters to the Solar-Log™

The wiring is done using a

- network cable (patch cable) and the
- Ethernet router or switch.

Procedure

1. Open the inverter as shown in the inverter's instructions.
2. Pull the network cable through the inverter's cable opening and connect it to the Speedwire interface.
3. Close the inverter cover if no other inverters are to be connected.
4. Plug the network cable into the RJ45 socket (Ethernet) on the Solar-Log™.

Connect the inverters to each other

The inverters are connected together using
the RJ45 interface and, if needed, a router or switch.
Connection setup according to the inverter's instructions.

Assigning IP addresses

- A static IP address has to be assigned to the inverter. This is set to automatic by default. Please refer to the inverter's user manual for more information.
- Please select an IP address with the same subnet as the Solar-Log™.
  For example: The Solar-Log™ has the IP address 192.168.178.49.
  The inverter in this case has to have a free IP address in the same range (from 192.168.178.2 to 192.168.178.254).
- Procedure: Start according to the inverter's instructions

Detection via the Solar-Log™ WEB Interface

- For detection on the Solar-Log™ , select the device class under the menu Configuration | Device | Definition | Interface with the plus symbol and then select SMA as the manufacturer. Confirm your selection with OK.
- Save your selections and then start the Device Detection under Configuration | Device | Detection.

Note for feed-in management

The feed-in management functions are also available via the Speedwire interface. Please note that settings for this must be made on the inverter using the inverter manufacturer's software. For more information, refer to the user manual of the inverter.

Note

Please refer to the instructions in the manufacturer's installation manual in regard to address types.

Note

Wiring with the bus.
Only one network connection is available per inverter with the integrated Speedwire interface.
A router or switch is required when using several inverters or when using the Ethernet (RS45) interface on the Solar-Log™.

Note on the inverter detection.

For successful inverter detection, it is necessary to enter the user and installer password of the inverter in the WEB menu of the Solar-Log™, under Configuration | Devices | Configuration | Plant passwords.

► Important:

To call the point Plant passwords must be at the interface previously SMA selected.

90.8 SMA - Sunny Central

Termination	Addressing	Interface
No	Yes	Ethernet

Select “SMA: Sunny Central CP“ during the device detection.

Supported models:

- 500 (CP-XT, CP-US, CP-JP)
- 630 (CP-XT, CP-US, CP-JP)
- 720 (CP-XT, CP-US)
- 750 (CP-US)
- 760 (CP-XT)
- 800 (CP-XT, CP-US, CP-JP)
- 850 (CP-XT, CP-US)
- 900 (CP-XT, CP-US)
- 1000 (CP-XT)

Overview

- Integrated interface
- Connect using network cable (patch cable) and Ethernet router or switch.
- The communication address has to be assigned.
- Installation steps
  - Assign the communication address.
  - Connect the inverters to the Solar-Log™ (RJ45).
  - Connect the inverters to each other (RJ45).

Assign the communication address.

- Assign the IP addresses according to the inverter‘s instructions.

Connect inverters and the Solar-Log™.

The wiring is done using a

- network cable (patch cable) and the
- Ethernet router or switch.

Procedure

1. Connect the Solar-Log™ and the inverter to the router or switch.
2. Assign an IP address to every inverter. Assign the IP addresses according to the inverter‘s instructions.

The first three number blocks like the Solar-Log™, e.g. 192.168.178.49.
The fourth number block: an address that is available, e.g. 192.168.178.50.

Very important!

Please refer to the latest version of the manufacturer‘s documentation for the connection of the devices and their configuration.

90.9 SMA - Sunny Tripower CORE1

Termination	Addressing	Interface
No	Yes	Ethernet

Select “SMA: Sunspec v2“ during the device detection.

Supported models:

- STP33-41, STP33-US-41, STP 50-40, STP 50-JP-40, STP 50-US-40, STP 50-41, STP50-US-41, STP 62-41, STP62-US-41

Overview

- Integrated interface
- Connect using network cable (patch cable) and Ethernet router or switch.
- The communication address has to be assigned.
- Installation steps
  - Assign the communication address.
  - Connect the inverters to the Solar-Log™ (RJ45).
  - Connect the inverters to each other (RJ45).

Assign the communication address.

- Assign the IP addresses according to the inverter‘s instructions.

Connect inverters and the Solar-Log™.

The wiring is done using a

- network cable (patch cable) and the
- Ethernet router or switch.

Procedure

1. Connect the Solar-Log™ and the inverter to the router or switch.
2. Assign an IP address to every inverter. Assign the IP addresses according to the inverter‘s instructions.

The first three number blocks like the Solar-Log™, e.g. 192.168.178.49.
The fourth number block: an address that is available, e.g. 192.168.178.50.



Note

Each inverter has to be individually reachable via the network.
To do this, activate the network interface at each inverter via the SMA SUNNY EXPLORER and connect the inverters into the network with a network switch.
Procedure:
► Set the „TCP Server“ to „On“ in the SMA SUNNY EXPLORER; Port=502.



Note

The Modbus device ID has to be set to 3 from the SMA device‘s web menu in order to perform a device detection for the inverter.
Furthermore, the SMA SUNNY EXPLORER must be switched to „ON“ via the menu item „TCP Server“ and the port must be set at 502. By default this entry is set to „NO“.
► After the changeover, you should restart the inverter for safety reasons.

Detection via the Solar-Log™ WEB Interface

- For detection on the Solar-Log™, select the device class under the menu Configuration | Device | Definition | Interface with the plus symbol and then select SMA as the manufacturer and Sunspec V2 as the type. Confirm your selection with OK.
- Save your selections and then start the Device Detection under Configuration | Device | Detection.

Very important!

Please refer to the latest version of the manufacturer's documentation for the connection of the devices and their configuration.

90.10 SMA - Sunny Tripower CORE2

Termination	Adressing	Interface
No	Yes	Ethernet

Select manufacturer „SMA: Sunspec v2“ during device detection.

Supported models:

- STP 110-60, STP 125-70

Overview

- Integrated interface.
- Connect using network cable (patch cable) and Ethernet router or switch.
- The communication address has to be assigned.
- Installation steps
  - Assign the communication address.
  - Connect the inverters to the Solar-Log™ (RJ45).
  - Connect the inverters to each other (RJ45).

Assign the communication address

- Assign the IP addresses according to the inverter‘s instructions.

Connect inverters and the Solar-Log™.

The wiring is done using a

- network cable (patch cable) and the
- Ethernet router or switch.

Procedure

1. Connect the Solar-Log™ and the inverter to the router or switch.
2. Assign an IP address to every inverter. Assign the IP addresses according to the inverter‘s instructions.

The first three number blocks like the Solar-Log™, e.g. 192.168.178.49.
The fourth number block: an address that is available, e.g. 192.168.178.50



Note

To be able to establish a direct connection via Ethernet, the following requirements must be fulfilled::

- ► The Sunny Tripower CORE2 must be in operation.
- ► A terminal device (e.g. PC or laptop) with an Ethernet interface must be available.
- ► The Sunny Tripower CORE2 must be connected directly to the end device.
- ► One of the following web browsers must be installed on the end device: Google Chrome (version 65 or later), Internet Explorer (version 11 or later), or Safari (version 11 or later).
- ► IP address of the inverter:
  The default IP address of the inverter for direct connection via Ethernet is:
  169.254.12.3
- ► For more information, see the inverter manual.

Note

By default, the Modbus interface is enabled and the communication port is set to 502.

Detection via the Solar-Log™ WEB Interface

- For detection on the Solar-Log™, select the device class under the menu Configuration | Device | Definition | Interface with the plus symbol and then select SMA as the manufacturer and Sunspec V2 as the type. Confirm your selection with OK.
- Save your selections and then start the Device Detection under Configuration | Device | Detection.

Very important!

Please refer to the latest version of the manufacturer's documentation for the connection of the devices and their configuration.

90.11 SMA - Sunspec Modbus

Termination	Addressing	Interface
No	Yes	Ethernet

Select “SMA: SunSpec Modbus“ during the device detection.

Supported models:

- Sunny Tripower 60-10
- Sunny Highpower 75-10

Overview

- Integrated interface
- The inverter‘s IP address has to be assigned per DHCP.
- Connect using network cable (patch cable) and Ethernet router or switch.
- Connecting the SMA Inverter Manager
- Installation steps
  - Turn the Solar-Log™ off.
  - Connect the inverters to each other.
  - Connect the inverters to the SMA Inverter Manager.
  - Connect the SMA Inverter Manager to the router/switch.
  - The inverters are assigned IP addresses via the SMA Inverter Manager per DHCP (default setting).
  - Connect the Solar-Log™ to the router/switch.

Connect the inverters to each other.

The inverters are connected together according to the inverter instructions.

Connect the inverters to the SMA Inverter Manager.

- Wire connections according to the inverter instructions.

Connecting the Solar-Log™/SMA Inverter Manager

- Connect the Solar-Log™ to the router/switch.
- Connect the SMA Inverter Manager to the router/switch.

Assigning IP addresses

- The inverters are assigned IP addresses via the SMA Inverter Manager.

Detection via the Solar-Log™ WEB Interface

- For detection on the Solar-Log™, select the device class under the menu Configuration | Device | Definition | Interface with the plus symbol and then select SMA as the manufacturer and SunSpec Modbus as the type. Confirm your selection with OK.
- Save your selections and then start the Device Detection under Configuration | Device | Detection.



Note

In order to perform the device detection for the inverters, the inverters first have to be set up according to the SMA instructions.

90.12 SMA - Sunny Tripower Modbus

Termination	Addressing	Interface
No	Yes	Ethernet

Select “SMA: Modbus“ during the device detection.

Supported models:

- STP 3.0-3AV-40, STP 4.0-3AV-40, STP 5.0-3AV-40, STP6.0-3AV-40, STP8.0-3AV-40, STP10.0-3AV-40, STP 15000TL-30, STP 20000TL-30, STP 25000TL-30
- SHP 100-20, SHP 150-20, SHP 125-US-20, SHP 150-US-20, SHP 100-JP-20, SHP 150-JP-20, SHP FLEX-US-21, SHP 100-21, SHP 100-JP-21, SHP 125-US-21, SHP 143-JP-21, SHP 150-21, SHP 150-US-21, SHP 165-US-21, SHP 172-21, SHP 172-US-21, SHP 180-21

Overview

- Installation steps:
  - Switch off the inverters and Solar-Log™.
  - Connect inverters to the Solar-Log™ (RJ45).
  - Connect the inverters to each other (RJ45).
  - The inverter’s has to be assigned a static IP address.

Connect inverters to the Solar-Log™

The wiring is done using a

- network cable (patch cable) and the
- Ethernet router or switch.

Connect the inverters to each other

The inverters are connected together using
the RJ45 interface and, if needed, a router or switch.
Connection setup according to the inverter’s instructions.

Assigning IP addresses

- A static IP address has to be assigned to the inverter from its web menu.
- Please select an IP address with the same class C subnet as the Solar-Log™.
  For example: The Solar-Log™ has the IP address 192.168.178.49.
  The inverter in this case has to have a free IP address in the same range (from 192.168.178.1 to 192.168.178.254).
- Procedure: Start according to the inverter’s instructions.



Note

The Modbus device ID has to be set to 3 from the SMA device’s web menu in order to perform a device detection for the inverter.
Furthermore, the SMA SUNNY EXPLORER must be switched to „ON“ via the menu item „TCP Server“ and the port must be set at 502. By default this entry is set to „NO“.
► Please restart the inverter after changing the network settings.

Very Important!

Once addressing is complete, the inverter can only be reached via the following addresses:

- IP address assigned manually or assigned by the DHCP server (router) (determined via network scanner software or network configuration of the router).
- Access address for Apple and Linux systems: SMA[serial number].local (e.g. SMA0123456789.local)
- Access address for Windows and Android systems: https://SMA[serial number] (e.g. https: SMA0123456789)

Detection via the Solar-Log™ WEB Interface

- For detection on the Solar-Log™, select the device class under the menu Configuration | Device | Definition | Interface with the plus symbol and then select SMA as the manufacturer and Modbus as the type. Confirm your selection with OK.
- Save your selections and then start the Device Detection under Configuration | Device | Detection.

Note on the direct connection!

The standard IP address of the inverter for direct connection via Ethernet is 169.254.12.3.
The prerequisites for this are:

- A terminal device (e.g. laptop) with an Ethernet interface must be available.
- The inverter must be connected directly to the end device.

Very important!

Please refer to the latest version of the manufacturer's documentation for the connection of the devices and their configuration.

90.13 SMA - Sunny Tripower X

Termination	Addressing	Interface
No	Yes	Ethernet

Select “SMA: Sunspec V2“ during the device detection.

Supported models:

- Sunny Tripower X 12, Sunny Tripower X 15, Sunny Tripower X 20, Sunny Tripower X 25, Sunny Tripower X 50, Sunny Tripower X 60

Overview

- Installation steps:
  - Switch off the inverters and Solar-Log™.
  - Connect inverters to the Solar-Log™ (RJ45).
  - Connect the inverters to each other (RJ45).
  - The inverter‘s has to be assigned a static IP address.

Connect inverters to the Solar-Log™

The wiring is done using a

- network cable (patch cable) and the
- Ethernet router or switch.

Connect the inverters to each other

The inverters are connected together using
the RJ45 interface and, if needed, a router or switch.
Connection setup according to the inverter‘s instructions.

Assigning IP addresses

- A static IP address has to be assigned to the inverter from its web menu.
- Please select an IP address with the same class C subnet as the Solar-Log™.
  For example: The Solar-Log™ has the IP address 192.168.178.49.
  The inverter in this case has to have a free IP address in the same range (from 192.168.178.1 to 192.168.178.254).
- Procedure: Start according to the inverter‘s instructions.



Note for communication!

► In order to establish successful communication with the Solar-Log, it is necessary to activate the Modbus server in the inverter.
► Please also ensure that the inverter is always up to date with the latest firmware version.

Detection via the Solar-Log™ WEB Interface

- For detection on the Solar-Log™, select the device class under the menu Configuration | Device | Definition | Interface with the plus symbol and then select SMA as the manufacturer and Sunspec V2 as the type. Confirm your selection with OK.
- Save your selections and then start the Device Detection under Configuration | Device | Detection.

Very important!

Please refer to the latest version of the manufacturer's documentation for the connection of the devices and their configuration.

91 SOCOMEC

91.1 SOCOMEC Sunsys B series

Termination	Addressing	Interface
Yes	Yes	RS485

Select “SOCOMEC“ during the device detection.

Supported models:

- Sunsys B12, Sunsys B15, Sunsys B20, Sunsys B30

Overview

- Integrated interface
- Where to connect: RJ45 sockets inside the inverter
- 3-pin wiring
- The communication address has to be assigned
- Installation steps:
  - Switch off the inverters and Solar-Log™
  - Connect inverters to the Solar-Log™
  - Connect the inverters to each other according to the inverter instructions
  - Communication address according to the inverter‘s instructions
    Address range 1 - 255

Connect inverters to the Solar-Log™

The wiring is done using a

- self-made cable connection with RS485 data cable.

Procedure

1. Open the inverter according to the inverter‘s instructions.
2. If you are fabricating the cable yourself, connect the wires as shown in the following diagram.

Solar-Log™ Base RS485 (A) / (B)	RJ45 inverter
Terminal	PIN
► (A) 6 or (B) 10 (Data+)	► 5
► (A) 8 or (B) 12 GND	► 7
► (A) 9 or (B) 13 (Data-)	► 4

3. Insert the RJ45 plug into the RJ45 socket on the first inverter.
4. If no further inverter is connected, terminate the inverter according to the instructions for the inverter.
5. Close the inverter if no other inverters are to be connected.

Connect the inverters to each other

- Connect using a data cable with an RJ45 plug.
- Where to connect: RJ45 sockets in the inverter.

Procedure

1. Open the inverter according to the inverter's instructions.
2. Insert the RJ45 plug into the RJ45 socket on the first inverter.
3. Insert the other end of the cable into the RJ45 socket on second inverter.
4. Connect the other inverters to each other in the same way.
5. Terminate the last inverter according to the inverter instructions.
6. Close the inverter.

Allocate communication address

- Recommendation: Continuous numbering starting with 1.
  Address range 1 - 255.
- Procedure: Start according to the inverter's instructions.

92 SofarSolar

92.1 SofarSolar G2

Termination	Addressing	Interface
Yes	Yes	RS485

Select “SofarSolar: G1/G2“ during the device detection.

Supported models (Wiring via RJ45):

- Sofar 4.4KTL-X – 12KTL-X
- Sofar 50KTL, 60KTL
- Sofar 10000TL – 20000TL
- Sofar 30000TL – 40000TL
- Sofar 50000TL – 70000TL

Supported models (Wiring via RS485 pin block):

- Sofar 1100TL –3000TL
- Sofar 3300TL-G3
- Sofar 70000TL-HV
- Sofar 3000TLM – 6000TLM
- Sofar 7.5KTLM
- Sofar 3KTLM-G2 –SOFAR 6KTLM-G2

Overview

- Integrated interface.
- Where to connect: RS485 pin block, inside the inverter.
- Where to connect: RJ45 socket inside the inverter.
- 2-pin wiring.
- The communication address has to be assigned.
- Installation steps:
  - Switch off the inverters and Solar-Log™.
  - Connect inverters to the Solar-Log™.
  - Connect the inverters to each other according to the inverter instructions.

Connect inverters to the Solar-Log™ (via RJ45)

The wiring is done using a

- self-made RS485 data cable with RJ45 plug.

Procedure

1. Open the inverter as shown in the inverter's instructions.
2. If you are making the cable yourself, connect the wires as shown in the following diagram:

Solar-Log™ Base RS485 (A) / (B)	RJ45 inverter
Terminal	Pin
► (A) 6 or (B) 10 (Data+)	► 2 RS485 A (+) (Orange)
► (A) 9 or (B) 13 (Data-)	► 1 RS485 B (-) (White and Orange)

3. In the inverter insert the RJ45 plug into the „RS-485 out" socket.
4. If no further inverter is connected, terminate the inverter according to the instructions for the inverter.
5. Close the inverter if no other inverters are to be connected.

Connect the inverters to each other

- Wiring via data cable with RJ45 plug.
- Where to connect: RJ45 socket inside the inverter.

Connect inverters to the Solar-Log™ (via RS485 pin block)

The wiring is done using a

- self-made 2-pin cable connection.

Procedure

1. Open the inverter as shown in the inverter's instructions.
2. If you are making the cable yourself, connect the wires as shown in the following diagram:

Solar-Log™ Base RS485 (A) / (B)	RS485 inverter pin block
Terminal	Pin
► (A) 6 or (B) 10 (Data+)	► TX+
► (A) 9 or (B) 13 (Data-)	► TX-

3. If no further inverter is connected, terminate the inverter according to the instructions for the inverter.
4. Close the inverter if no other inverters are to be connected.

Connect the inverters to each other:

- Connect the inverters to each other according to the inverter instructions.

Allocate communication address

- Recommendation: Continuous numbering starting with 1.
  Adress range 1-31
- Setting: Using the inverter display
- Procedure: Start according to the inverter's instructions



Note

A maximum of 31 inverters can be connected per RS485 bus.

92.2 SofarSolar G3

Termination	Addressing	Interface
Yes	Yes	RS485

Select “SofarSolar: G3/G4“ during the device detection.

Supported models:

- 3KTLM-G3, 3.3KTLX-G3, 3.6KTLM-G3, 3.68KTLM-G3, 4KTLM-G3, 4.4KTLX-G3, 4.6KTLM-G3, 5KTLM-G3, 5.5KTLX-G3, 6KTLM-G3, 6.6KTLX-G3, 8.8KTLX-G3, 11KTLX-G3, 11KTLX-G3-A, 12KTLX-G3, 15KTLX-G3, 17KTLX-G3, 20KTLX-G3, 22KTLX-G3, 24KTLX-G3, 25KTLX-G3, 30KTLX-G3, 33KTLX-G3, 36KTLX-G3, 40KTLX-G3, 40KTLX-G3-HV, 45KTLX-G3, 50KTLX-G3, 50KTLX-G3-HV, 60KTLX-G3, 80KTL, 80KTLX-G3, 100KTL, 100KTL-HV, 110KTL, 125KTL-HV, 136KTL-HV, 250KTL-HV, 250KTLX0, 255KTL-HV, 330KTLX0, 350KTLX0

Overview

- Interface integrated.
- Where to connect: COM interface at the bottom of the device.
- 2-pin wiring.
- The communication address has to be assigned.
- Installation steps:
  - Switch off the inverters and Solar-Log™.
  - Connect inverters to the Solar-Log™.
  - Connect the inverters to each other according to the inverter instructions.

Connect inverters to the Solar-Log™

The wiring is done using a

- self-made, shielded 2 wire data cable.

Procedure

1. If you are making the cable yourself, connect the wires as shown in the following diagram:

Solar-Log™ Base RS485 (A) / (B)	COM interface
Terminal	Pin
► (A) 6 or (B) 10 (Data+)	► 1 RS485 A+ (A1-1) or 2 RS485 A+ (A1-2)
► (A) 9 or (B) 13 (Data-)	► 3 RS485 B- (B1-1) or 4 RS485 B- (B1-2)

2. If no further inverter is connected, terminate the inverter according to the instructions for the inverter.

Connect the inverters to each other:

- Wiring via 2-wire shielded data cable.
- Where to connect: COM interface at the bottom of the device.
- Procedure: According to the inverter instructions.

Allocate communication address

- Recommendation: Continuous numbering starting with 1.
  Adress range 1-31
- Setting: Using the inverter display.
- Procedure: Start according to the inverter‘s instructions.

Note!

The RS485 bus must not be longer than 1000 meters.

Note!

Please set the correct country code. See the manual of the inverter.

Very important!

Please refer to the latest version of the manufacturer's documentation for the connection of the devices and their configuration.

92.3 SofarSolar G4

Termination	Addressing	Interface
Yes	Yes	RS485

Select “SofarSolar: G3/G4“ during the device detection.

Supported models:

- 100KTLX-G4, 110KTLX-G4, 125KTLX-G4

Overview

- Interface integrated.
- Where to connect: COM interface at the bottom of the device.
- 2-pin wiring.
- The communication address has to be assigned.
- Installation steps:
  - Switch off the inverters and Solar-Log™.
  - Connect inverters to the Solar-Log™.
  - Connect the inverters to each other according to the inverter instructions.

Connect inverters to the Solar-Log™

The wiring is done using a

- self-made, shielded 2 wire data cable.

Procedure

1. If you are making the cable yourself, connect the wires as shown in the following diagram:

Solar-Log™ Base RS485 (A) / (B)	COM interface
Terminal	Pin
► (A) 6 or (B) 10 (Data+)	► 1 RS485 A+ (A1-1) or 2 RS485 A+ (A1-2)
► (A) 9 or (B) 13 (Data-)	► 3 RS485 B- (B1-1) or 4 RS485 B- (B1-2)

2. If no further inverter is connected, terminate the inverter according to the instructions for the inverter.

Connect the inverters to each other:

- Wiring via 2-wire shielded data cable.
- Where to connect: COM interface at the bottom of the device.
- Procedure: According to the inverter instructions.

Allocate communication address

- Recommendation: Continuous numbering starting with 1.
  Adress range 1-31
- Setting: Using the inverter display.
- Procedure: Start according to the inverter‘s instructions.

Note!

The RS485 bus must not be longer than 1000 meters.

Note!

Please set the correct country code. See the manual of the inverter.

Very important!

Please refer to the latest version of the manufacturer's documentation for the connection of the devices and their configuration.

92.4 SofarSolar G3/G4 - Connection via Ethernet

Termination	Addressing	Interface
No	Yes	Ethernet

Select “SofarSolar: G3/G4“ during the device detection.

Supported models:

- 250KTLX0, 330KTLX0, 350KTLX0

Overview

- Integrated interface.
- IP address of the inverter must be assigned statically/fixed.
- Wiring via network cable (patch cable) and Ethernet router or switch.
- Installation steps:
  - IP address assigned statically/fixed at the inverter.
  - Switch off the inverter and Solar-Log™.
  - Connect the inverter to the Solar-Log™ (RJ45).
  - Connect inverters to each other (RJ45).

Connect the inverter to the Solar-Log™

The wiring is done via

- Network cable (patch cable) and
- Ethernet router or switch.

Connecting the inverters to each other

The cabling of the inverters among each other is carried out according to the inverter instructions.

Assign IP address

- The IP address must be assigned statically/fixed (see inverter manual).
- Please select an IP address from the same class C subnet of the Solar-Log™.
  Example: Solar-Log™ has 192.168.178.49.
  In this case, the inverters must have an IP address from the range 192.168.178.xxx (xxx stands for a number between 1 - 254).
- Procedure: According to the instructions for the inverter.

Detection via the Solar-Log™ WEB Interface

- For detection on the Solar-Log™, select the device class under the menu Configuration | Device | Definition | Interface with the plus symbol and then select SofarSolar as the manufacturer. Confirm your selection with OK.
- Save your selections and then start the Device Detection under Configuration | Device | Detection.

Note

To enable communication between the Solar-Log™ and the SofarSolar, the Modbus TCP port must be set to 502. (For port setting see manufacturer’s instructions)

Very important!

Please refer to the latest version of the manufacturer‘s documentation for the connection of the devices and their configuration.

93 SolarEdge

93.1 SolarEdge

Termination	Addressing	Interface
Switch	Yes	RS485

Select “SolarEdge“ during the device detection.

Supported models:

- SE:
  3k, 4k, 5k, 6k, 7k, 8k, 9k, 9KUS, 10k, 10KUS, 10.5k-KOR, 12k, 12.5k, 14.4KUS, 15k, 16k, 17k, 20KUS, 25K, 27.6K, 30K, 33.3K, 33.3KUS, 43.2KUS, 50K, 55k, 66.6K, 66.6KUS, 82.8K, 90K, 100K, 100KUS, 120K, 1000M, 1500M, 2000M, 2200, 3000, 3000H, 3000A-US, 3300, 3500, 3500H, 3680H, 3800A-US, 4000, 4000H, 4000-16A, 5000, 5000H, 5000A-US, 6000, 6000A-US, 7000A-US, 7600A-US, 10000A-US, 11400A-US

Overview

- Integrated interface
- Where to connect: Terminal strip inside the inverter
- Communication address must be allocated
- 3-pin wiring
- Installation steps
  - Switch off the inverters and Solar-Log™
  - Connect inverters to the Solar-Log™
  - Address inverter and set protocol
  - Connect the inverters to each other

Note

Installing a “SolarEdge-Gateway” on a RS485 bus, connecting SolarEdge inverters with a Solar-Log™, can lead to communication problems with the inverters. In order to ensure a correct communication with the Solar-Log™, the “Wireless package” switch must be activated on the respective I/O port in the web menu.

► The SolarEdge-Gateway is not supported on I/O port “C”, which has no wireless package option.

Connect inverters to the Solar-Log™

The wiring is done using a

- self-made cable connection with terminal block connector.

Very important! SolarEdge in conjunction with power management!

When using SolarEdge inverters with the Solar-Log as EZA controller, any ramp parameters set in the inverters are deactivated. The ramps required for active and reactive power control are calculated and executed by the Solar-Log. Configured ramps in the inverters are not required for this.
The fallback intervals for communication between the inverter and Solar-Log™ must be set directly on the inverter. (Minimum 20 seconds)

Procedure

1. Open the inverter as shown in the inverter's instructions.
2. Pull the free wires through the wire opening in the inverter.
3. If you are making the cable yourself, connect the wires as shown in the following diagram:

Solar-Log™ Base RS485 (A) / (B)	X4 socket RS485-1 inverter
Terminal	PIN
► (A) 6 or (B) 10 (Data+)	► A - Data+
► (A) 8 or (B) 12 GND	► G - GND
► (A) 9 or (B) 13 (Data-)	► B - Data-

4. If no further inverter is connected, terminate the inverter according to the instructions for the inverter: via dip switch 1 to „On".
5. Screw the inverter cover on again.

Connect the inverters to each other

- Where to connect: Terminal strip inside the inverter

Procedure

1. Open the inverter as shown in the inverter's instructions.
2. Pull the free wires through the wire opening in the inverter.
3. If you are making the cable yourself, connect the wires as shown in the following diagram:

X4 socket RS485-1 inverter n	X4 socket RS485-1 inverter n+1
PIN	PIN
► A - Data+	► A - Data+
► G - GND	► G - GND
► B - Data-	► B - Data-

4. Connect the other inverters to each other in the same way.
5. If no further inverter is connected, terminate the inverter according to the instructions for the inverter: via dip switch 1 to „On".
6. Screw the inverter cover on again.

Allocate communication address

- Recommendation: Continuous numbering starting with 1; highest possible address: 247.
- Setting: Using the inverter display
- Procedure: Start according to the inverter's instructions

Inverter settings

Two settings need to be checked on the inverter's control panel and changed if needed before performing the inverter detection.

1. Non-SE Logger has to be set in the Communication // RS485-1 Conf // Device Type menu.
2. SunSpec has to be activated in the Communication // RS485-1 Conf // Protocol menu.

93.2 SolarEdge - Connection via Ethernet

Termination	Addressing	Interface
No	Yes	Ethernet

Select “SolarEdge“ during the device detection.

Supported models:

- SE:
  3k, 4k, 5k, 6k, 7k, 8k, 9k, 9KUS, 10k, 10KUS, 10.5k-KOR, 12k, 12.5k, 14.4KUS, 15k, 16k, 17k, 20KUS, 25K, 27.6K, 30K, 33.3K, 33.3KUS, 43.2KUS, 50K, 55k, 66.6K, 66.6KUS, 82.8K, 90K, 100K, 100KUS, 120K, 1000M, 1500M, 2000M, 2200, 3000, 3000H, 3000A-US, 3300, 3500, 3500H, 3680H, 3800A-US, 4000, 4000H, 4000-16A, 5000, 5000H, 5000A-US, 6000, 6000A-US, 7000A-US, 7600A-US, 10000A-US, 11400A-US

Overview

- Integrated interface.
- IP address of the inverter must be assigned statically/fixed.
- Wiring via network cable (patch cable) and Ethernet router or switch.
- Installation steps:
  - IP address assigned statically/fixed at the inverter.
  - Switch off the inverter and Solar-Log™.
  - Connect the inverter to the Solar-Log™ (RJ45).
  - Connect inverters to each other (RJ45).

Connect the inverter to the Solar-Log™

The wiring is done via

- Network cable (patch cable) and
- Ethernet router or switch.

Connecting the inverters to each other

The cabling of the inverters among each other is carried out according to the inverter instructions.

Assign IP address

- The IP address must be assigned statically/fixed (see inverter manual).
- Please select an IP address from the same class C subnet of the Solar-Log™.
  Example: Solar-Log™ has 192.168.178.49.
  In this case, the inverters must have an IP address from the range 192.168.178.xxx (xxx stands for a number between 1 - 254).
- Procedure: According to the instructions for the inverter.

Detection via the Solar-Log™ WEB Interface

- For detection on the Solar-Log™, select the device class under the menu Configuration | Device | Definition | Interface with the plus symbol and then select SolarEdge as the manufacturer. Confirm your selection with OK.
- Save your selections and then start the Device Detection under Configuration | Device | Detection.

Note

To enable communication between the Solar-Log™ and the SolarEdge, the Modbus TCP port must be set to 502. (For port setting see manufacturer‘s instructions)

94 SolarMax

94.1 SolarMax - SHT, SMT, SP series

Termination	Addressing	Interface
Yes	Yes	RS485

Select “SolarMax“ during the device detection.

Supported models:

- SHT series:
  17SHT, 20SHT, 22HT, 25HT, 28HT, 30HT, 50SHT, 50SHT-S, 50SHT-S2, 60SHT, 60SHT-S, 60SHT-S2
- SMT series:
  6SMT, 8SMT, 10SMT, 13SMT, 15SMT
- SP series:
  1000SP, 1500SP, 2000SP, 2500SP, 3000SP, 3600SP, 4000SP, 4600SP, 5000SP

Overview

- Integrated interface.
- Where to connect: Circuit board connectors in the inverter.
- 2-pin wiring.
- Communication address must be allocated.
- Installation steps:
  - Switch off the inverters and Solar-Log™.
  - Connect inverters to the Solar-Log™.
  - Connect the inverters to each other.
  - Allocate communication address.

Connect inverters to the Solar-Log™

The wiring is done using a

- self-made RS485 data cable.

Procedure

1. For the cable connection, connect the wires according to the following diagram:

Solar-Log™ Base RS485 (A) / (B)	Circuit board connectors Inverter
Terminal	Pin
► (A) 6 or (B) 10 (Data+)	► 1 A
► (A) 9 or (B) 13 (Data-)	► 1 B

2. Cabling via circuit board connectors in the inverter.

Connect the inverters to each other

- Wiring via RS485 data cable with circuit board connector in the inverter.
- Where to connect: Circuit board connectors in the inverter (bottom side of the device).

Procedure

1. Wiring via circuit board connectors in inverter 1 via 2A and 2B to inverter 2 to 1A and 1B (see also table below).
2. Connect the other inverters to each other in the same way. (See manual of the inverter manufacturer).

Inverter wiring table:

Solar-Log™	Circuit board connectors Inverter 1		Circuit board connectors Inverter 2	
Terminal	Input	Output	Input	Output
► (Data+)	► 1 A	► 2 A	► 1 A	► 2 A
► (Data-)	► 1 B	► 2 B	► 1 B	► 2 B

Allocate communication address

- Recommendation: Continuous numbering starting with 1
- Setting: Via the MaxLink app
- Procedure: According to the instructions in the inverter manual of the manufacturer

Note for termination of the inverters:

Series SHT and SMT:
In order to be able to terminate the inverters, the MaxLink app must be downloaded from the PlayStore or Apple Store. Follow the instructions in the manufacturer's inverter manual.

Series SP:
Here the termination of the inverters is done via the DIP switch on the RS485 board in the inverter.

Note on addressing the inverters / inverter settings:

The inverters are addressed via the MaxLink app. This must be downloaded from the PlayStore or Apple Store. Follow the instructions in the manufacturer's inverter manual.

► The „Remote Mode" is activated by default for the SP, SHT and SMT series.

Very important!

Please refer to the latest version of the manufacturer's documentation for the connection of the devices and their configuration.

94.2 SolarMax – S, MT, P, TS, TS-SV and HT series

Termination	Addressing	Interface
No	Yes	RS485

Select “SolarMax“ during the device detection.

Supported models:

- HT series:
  20HT2, 20HT4, 25HT2, 25HT4, 30HT4, 32HT2, 32HT4
- MT series:
  6MT2, 6MT2 CH, 8MT2, 10MT, 10MT2, 12MT2 A, 13MT, 13MT2, 13MT3, 15MT, 15MT2, 15MT3, 15MT3 A, 18MT3 A
- P series:
  2000P, 3000P, 4000P, 4600P, 5000P
- S series:
  20S, 25S, 30S, 35S, 2000S, 3000S, 4200S, 6000S
- TS series:
  50TS, 75TS A, 80TS, 100TS, 300TS ST, 300TS MT
- TS-SV series:
  330TS-SV ST, 330TS-SV MT, 360TS-SV MT, 360TS-SV ST, 660TS-SV ST, 720TS-SV MT, 720TS-SV ST, 990TS-SV ST, 1080TS-SV ST, 1320TS-SV ST, 1440TS-SV ST

Overview

- Integrated interface
- Where to connect: RJ45 socket on the outside of the inverter
- Where to connect HT series: RJ45 socket inside the inverter
- 2-pin wiring
- Communication address must be allocated
- Installation steps
  - Switch off the inverters and Solar-Log™
  - Connect inverters to the Solar-Log™
  - Connect the inverters to each other
  - Allocate communication address

Connect inverters to the Solar-Log™

The wiring is done using a

- self-made RS485 data cable with RJ45 plug.



Caution

Risk of damage to the unit!
The Solar-Log™ also has an RJ45 socket, which must never be connected to the RJ45 socket on the inverter.

► Only connect inverters via the RS485/422 Solar-Log™ interface(s).

Procedure

1. If you are making the cable yourself, connect the wires as shown in the following diagram:

Solar-Log™ Base RS485 (A) / (B)	RJ45 inverter
Terminal	PIN
► (A) 6 or (B) 10 (Data+)	► 7
► (A) 9 or (B) 13 (Data-)	► 8

2. Insert the RJ45 plug into any RJ45 socket on the first inverter.

Connect the inverters to each other

- Connect using the RS485 data cable with an RJ45 plug
- Where to connect: RJ45 socket on the outside of the inverter
- Where to connect HT series: RJ45 socket inside the inverter

Procedure

1. Insert the RJ45 plug into the free RJ45 socket on the first inverter.
2. Insert the other end of the wire into any RJ45 socket on inverter 2.
3. Connect the other inverters to each other in the same way.

Allocate communication address

- Recommendation: Continuous numbering starting with 1.
- Setting: Using the inverter display.
- Procedure: Start according to the inverter's instructions.

Notice concerning the RS485 wiring of the SolarMax P series:

The P series from SolarMax does not support RS485 "Daisy Chain" connections. This means that multiple inverters cannot be connected together on the same RS485 bus cable.
For this reason, a maximum of one inverter of the P series can be connected to the respective RS485 ports (A/B/C, max. 3) of a Solar-Log™.

► Alternatively to using the RS485 variation, you can connect multiple P series inverters to the Solar-Log™ by means the Ethernet connection to the LAN.

Note

The inverter's factory setting is communication address 255.

► On the inverter display set the communication address manually to 1 even if only one inverter is connected to the Solar-Log™.

S series:

► When setting the communication address on the inverter display only the RS485 interface must be activated (set at the factory), not the Ethernet interface that is also installed in the inverter.

Note regarding the HT series:

Inverter models that have more than 3 MPP trackers are subdivided by the Solar-Log™ into multiple “virtual” devices. Thus, for inverter type 32HT4, for example, with 4 MPP trackers, two virtual devices are detected.

► The reason for this is because the Solar-Log™ is limited to a maximum of 3 MPP trackers per inverter.

Note for feed-in management

The inverter itself has to be configured with MaxTalk2 (SolarMax's software) and set to "Remote mode" to be able to use reactive power management. Please refer to the inverter instructions for more information on this topic.

Note

Power reduction of the SolarMax S series inverters only works with firmware version 1.5.12800 and higher.
Devices from serial number 186288 can be provided with a firmware update by an installer.
Unfortunately, devices with a serial number < 186288 cannot be controlled.

94.3 SolarMax - C series

Termination	Addressing	Interface
No	Yes	RS485

Select “SolarMax“ during the device detection.

Supported models:

- C series:
  20C, 25C, 30C, 35C, 50C, 80C, 100C, 300C, 330C-SV, 2000C, 3000C, 4000C, 4200C, 6000C

Overview

- Integrated interface.
- Where to connect: RJ45 socket on the outside of the inverter.
- 6-pin wiring.
- Communication address must be allocated.
- Installation steps:
  - Switch off the inverters and Solar-Log™.
  - Connect inverters to the Solar-Log™.
  - Connect the inverters to each other.
  - Allocate communication address.

Connect inverters to the Solar-Log™

The wiring is done using a

- self-made RS485 data cable with RJ45 plug.



Caution

Risk of damage to the unit!
The Solar-Log™ also has an RJ45 socket, which must never be connected to the RJ45 socket on the inverter.

► Only connect inverters via the RS485/422 Solar-Log™ interface(s).

Procedure

1. If you are making the cable yourself, connect the wires as shown in the following diagram:

Solar-Log™ Base RS485 (A) / (B)	RJ45 inverter
Terminal	PIN
► (A) 6 or (B) 10 (Data+)	► 7
► (A) 7 or (B) 11	► 1
► (A) 7 or (B) 11	► 2
► (A) 8 or (B) 12 GND	► 3
► (A) 8 or (B) 12 GND	► 4
	5 - unused
	6 - unused
► (A) 9 or (B) 13 (Data-)	► 8

2. Insert the RJ45 plug into any RJ45 socket on the first inverter.

Connect the inverters to each other

- Connect using the RS485 data cable with an RJ45 plug.
- Where to connect: RJ45 socket on the outside of the inverter.

Procedure

1. Insert the RJ45 plug into the free RJ45 socket on the first inverter.
2. Insert the other end of the wire into any RJ45 socket on inverter 2.
3. Connect the other inverters to each other in the same way.

Allocate communication address

- Recommendation: Continuous numbering starting with 1.
- Setting: Using the inverter display.
- Procedure: Start according to the inverter's instructions.



Note

The inverter's factory setting is communication address 255.

► On the inverter display set the communication address manually to 1 even if only one inverter is connected to the Solar-Log™.



Note for feed-in management

The inverter itself has to be configured with MaxTalk2 (SolarMax's software) and set to "Remote mode" to be able to use reactive power management. Please refer to the inverter instructions for more information on this topic.

94.4 SolarMax – E series

Termination	Addressing	Interface
No	Yes	RS485

Select “SolarMax“ during the device detection.

Supported models:

- 2000E, 3000E, 4000E, 6000E

Overview

- Interface not integrated; Retrofit RS485 interface board.
- 6-pin wiring.
- Communication address must be allocated.
- Installation steps:
  - Switch off the inverters and Solar-Log™.
  - Install the RS485 interface in the inverter.
  - Connect inverters to the Solar-Log™.
  - Connect the inverters to each other.
  - Allocate communication address.

Installing the RS485 interface

Procedure

► Install the RS485 interface in the inverter in accordance with the interface board installation instructions.

Connect inverters to the Solar-Log™

The wiring is done using a

- self-made cable connection using RS485 data cable with RJ45 plug.



Caution

Risk of damage to the unit!
The Solar-Log™ also has an RJ45 socket, which must never be connected to the RJ45 socket on the inverter.

► Only connect inverters via the RS485/422 Solar-Log™ interface(s).

Procedure

1. Open the inverter as shown in the inverter's instructions.
2. If you are making the cable yourself, connect the wires as shown in the following diagram:

Solar-Log™ Base RS485 (A) / (B)	RJ45 inverter
Terminal	PIN
► (A) 6 or (B) 10 (Data+)	► 7
► (A) 7 or (B) 11	► 1
► (A) 7 or (B) 11	► 2
► (A) 8 or (B) 12 GND	► 3
► (A) 8 or (B) 12 GND	► 4
	5 - unused
	6 - unused
► (A) 9 or (B) 13 (Data-)	► 8

3. Insert the RJ45 plug into any RJ45 socket on inverter 1.
4. Close the inverter if no other inverters are to be connected.

Connect the inverters to each other

- Connect using a network cable (patch cable).
- Where to connect: RJ45 socket inside the inverter (on the retrofitted RS485 interface).

Procedure

1. Open the inverter as shown in the inverter's instructions.
2. Insert the RJ45 plug into any RJ45 socket on inverter 1.
3. Insert the other end of the wire into any RJ45 socket on inverter 2.
4. Connect the other inverters to each other in the same way.
5. Close inverters.

Allocate communication address

- Recommendation: Continuous numbering starting with 1.
- Setting: Using the inverter display.
- Procedure: Start according to the inverter's instructions.



Note for feed-in management

The inverter itself has to be configured with MaxTalk2 (SolarMax's software) and set to "Remote mode" to be able to use reactive power management. Please refer to the inverter instructions for more information on this topic.

94.5 SolarMax via LAN interface

Termination	Addressing	Interface
No	Yes	Ethernet

Select “SolarMax“ during the device detection.

Supported models:

- HT series:
  20HT2, 20HT4, 25HT2, 25HT4, 30HT4, 32HT2, 32HT4
- MT series:
  6MT2, 6MT2 CH, 8MT2, 10MT, 10MT2, 12MT2 A, 13MT, 13MT2, 13MT3, 15MT, 15MT2, 15MT3, 15MT3 A, 18MT3 A
- P series:
  2000P, 3000P, 4000P, 4600P, 5000P
- S series:
  20S, 25S, 30S, 35S, 2000S, 3000S, 4200S, 6000S
- SMT series:
  6SMT, 8SMT, 10SMT, 13SMT, 15SMT
- SP series:
  1000SP, 1500SP, 2000SP, 2500SP, 3000SP, 3600SP, 4000SP, 4600SP, 5000SP
- TP series:
  4TP, 5TP2, 6TP2, 7TP2
- TS series:
  50TS, 75TS A, 80TS, 100TS, 300TS ST, 300TS MT
- TS-SV series:
  330TS-SV ST, 330TS-SV MT, 360TS-SV MT, 360TS-SV ST, 660TS-SV ST, 720TS-SV MT, 720TS-SV ST, 990TS-SV ST, 1080TS-SV ST, 1320TS-SV ST, 1440TS-SV ST

Overview

- Integrated interface.
- The inverter’s IP address has to be assigned
- Connected using a network cable (patch cable) and Ethernet router or switch
- Installation steps
  - The inverter has to be assigned a static IP address
  - Switch off the inverters and Solar-Log™
  - Connect inverters to the Solar-Log™ (RJ45)
  - Connect the inverters to each other (RJ45)

Connect inverters to the Solar-Log™

The wiring is done using a

- network cable (patch cable) and the
- Ethernet router or switch.

Connect the inverters to each other

The inverters are connected together using
the RJ45 interface and, if needed, a router or switch.
Follow the connection setup according to the inverter's instructions.

Assigning IP addresses

- A static IP address has to be assigned to the inverter via the display.
- Please select an IP address with the same class C subnet as the Solar-Log™.
  For example: The Solar-Log™ has the IP address 192.168.178.49.
  The inverter in this case has to have a free IP address in the same range (from 192.168.178.1 to 192.168.178.254).
- Procedure: Start according to the inverter's instructions.



Notes on inverter configuration

► The inverter's Ethernet interface has to be activated.
► Only the TCP port "12345" is supported.



Note for feed-in management

The inverter itself has to be configured with MaxTalk2 (SolarMax's software) and set to "Remote mode" to be able to use reactive power management. Please refer to the inverter instructions for more information on this topic.

95 SolarMG

95.1 SolarMG

Termination	Addressing	Interface
Yes	Yes	RS485

Select “SolarMG“ during the device detection.

Supported models:

- SG-6KWT, SG-10KWT, SG-15KWT, SG-20KWT, SG-25KWT, SG-30KWT, SG-50KWT, SG-60KWT, SG-100KWT, SG-125KWT

Overview of models (SG-6KWT, SG-10KWT, SG-15KWT, SG-20KWT, SG-25KWT, SG-30KWT)

- Integrated interface.
- Where to connect: RS485 pin strip (COM2), located at the bottom of the inverter behind the COM2 cover (see manufacturer‘s instructions).
- 2-pin wiring.
- Communication address must be assigned (see instructions for the inverter).
- Installation steps:
  - Switch off the inverters and Solar-Log™.
  - Connect inverters to the Solar-Log™.
  - Connect the inverters to each other according to the instructions for the inverter.

Connect inverters to the Solar-Log™

The wiring is done using a

- self-made RS485 data cable.

Procedure for models (SG-6KWT, SG-10KWT, SG-15KWT, SG-20KWT, SG-25KWT, SG-30KWT)

1. Open the cover (COM2) at the bottom of the inverter according to the inverter instructions.
2. Connect the wires of the cable connection according to the following diagram:

Solar-Log™ Base RS485 (A) / (B)	COM2 port
Terminal	Pin
► (A) 6 or (B) 10 (Data+)	► 1 A (+)
► (A) 9 or (B) 13 (Data-)	► 2 B (-)

3. If no further inverters are connected, terminate the inverter according to the inverter instructions.

Connect the inverters to each other

- Where to connect: Com port at the bottom of the inverter cover (see manufacturer‘s instructions).
- Wiring the inverter according to the inverter manual.

Overview of models (SG-50KWT, SG-60KWT)

- Integrated interface.
- Where to connect: Cable entry at the bottom of the inverter (see manufacturer's instructions).
- 2-pin wiring.
- Communication address must be assigned (see instructions for the inverter).
- Installation steps:
  - Switch off the inverters and Solar-Log™.
  - Connect inverters to the Solar-Log™.
  - Connect the inverters to each other according to the instructions for the inverter.

Connect inverters to the Solar-Log™

The wiring is done using a

- self-made RS485 data cable.

Procedure for models (SG-50KWT, SG-60KWT)

1. Open the cable entry at the bottom of the inverter according to the inverter instructions.
2. Connect the wires of the cable connection according to the following diagram:

Solar-Log™ Base RS485 (A) / (B)	RS485 port Inverter
Terminal	Pin
► (A) 6 or (B) 10 (Data+)	► 1A (+)
► (A) 9 or (B) 13 (Data-)	► 2B (-)

3. If no further inverters are connected, terminate the inverter according to the inverter instructions.

Connect the inverters to each other

- Where to connect: Cable entry at the bottom of the inverter (see manufacturer's instructions).
- Wiring the inverter according to the inverter manual.

Overview of models (SG-100KWT, SG-125KWT)

- Integrated interface.
- Where to connect: Cable entry at the bottom of the inverter (see manufacturer's instructions).
- 2-pin wiring.
- Communication address must be assigned (see instructions for the inverter).
- Installation steps:
  - Switch off the inverters and Solar-Log™.
  - Connect inverters to the Solar-Log™.
  - Connect the inverters to each other according to the instructions for the inverter.

Connect inverters to the Solar-Log™

The wiring is done using a

- self-made RS485 data cable.

Procedure for models (SG-100KWT, SG-125KWT)

1. Open the cable entry at the bottom of the inverter according to the inverter instructions.
2. Connect the wires of the cable connection according to the following diagram:

Solar-Log™ Base RS485 (A) / (B)	RS485 port Inverter
Terminal	Pin
► (A) 6 or (B) 10 (Data+)	► 8 RS485_A (+)
► (A) 9 or (B) 13 (Data-)	► 7 RS485_B (-)

3. If no further inverters are connected, terminate the inverter according to the inverter instructions.

Connect the inverters to each other

- Cable entry at the bottom of the inverter (see manufacturer's instructions).
- Wiring the inverter according to the inverter manual.

Detection via the Solar-Log™ WEB Interface

- For detection on the Solar-Log™, select the device class under the menu Configuration | Device | Definition | Interface with the plus symbol and then select SolarMG as the manufacturer. Confirm your selection with OK.
- Save your selections and then start the Device Detection under Configuration | Device | Detection.

Very important!

For the connection of the devices of the respective manufacturer, please observe the manufacturer's documentation in the respective valid version.

96 SolaX Power

96.1 SolaX Power X1

Termination	Addressing	Interface
Yes	Automatic	RS422

Select “SolaXPower: X1 1phase/2phase“ during the device detection.

Supported models:

- SL-TL1500, SL-TL2200, SL-TL2500, SL-TL2800, SL-TL3000, SL-TL3300T, SL-TL3600T, SL-TL4400T, SL-TL5000T

Overview

- Integrated interface.
- 2 RJ45 sockets on the outside of the inverter.
- 4-pin wiring - only on RS422 interface.
- Communication address does not have to be assigned.
- Installation steps:
  - Switch off the inverters and Solar-Log™.
  - Connect inverters to the Solar-Log™.
  - Connect the inverters to each other.

Note

Only connect inverter using the RS422 interface.

Connect inverters to the Solar-Log™.

The wiring is done using a

- self-made, shielded 8 wire data cable.
- Where to connect: RJ45 socket on the inverter

Caution

Risk of damage to the unit!
The Solar-Log™ also has an RJ45 socket, which must never be connected to the RJ45 socket on the inverter.

► Only connect inverters via the RS422 interface.

Procedure

1. If you make the cable yourself, connect the wires as shown in the following diagram.

Solar-Log™ Base RS422	RJ45 inverter
Terminal	PIN
► 6 (T/RX+)	► Pin 3 - TX+
► 9 (T/RX-)	► Pin 6 - TX-
► 10 (R/TX+)	► Pin 1 - RX+
► 13 (R/TX-)	► Pin 2 - RX-

2. Insert the RJ45 plug into any RJ45 socket on inverter 1.
3. If no further inverter is connected, terminate the inverter according to the instructions for the inverter.

Connect the inverters to each other

- Connect using a RJ45 cable (patch cable).
- Where to connect: RJ45 socket.

Procedure

1. Insert the self-made cable with the RJ45 plug into any RJ45 socket on inverter 1. Connect the other end to the terminal plug on the Solar-Log™.
2. Insert the RJ45 cable into the 2nd RJ45 socket on inverter 1 and into any RJ45 socket on inverter 2.
3. Connect the other inverters to each other in the same way.
4. Terminate the last inverter in accordance with the inverter instructions.



Note

A maximum of 32 inverters can be connected per RS422 bus.

96.2 SolaX Power X3-Commercial

Termination	Addressing	Interface
-*	Yes	RS485

Select “SolaXPower: X3 3phase“ during the device detection.

Supported models:

- X3-MGA-40K-G2, X3-MGA-50K-G2, X3-MGA-60K-G2, X3-MGA-20K-G2-LV, X3-MGA-25K-G2-LV, X3-MGA-30K-G2-LV, X3-MGA-35K-G2-LV, X3-FTH-80K, X3-FTH-100K, X3-FTH-110K, X3-FTH-120K, X3-FTH-125K, X3-FTH-136K-MV, X3-FTH-150K-MV, X3-FTH-40K-LV, X3-FTH-50K-LV, X3-FTH-60K-LV, X3-FTH-70K-LV

Overview

- Integrated interface.
- Where to connect: Com connection at the bottom of the inverter.
- 3-pin wiring.
- Communication address must be allocated.
- Installation steps
  - Switch off the inverters and Solar-Log™.
  - Connect inverters to the Solar-Log™.
  - Connect the inverters to each other
  - Allocate communication address.
    Settings on the inverter‘s display according to the manufacturer‘s manual.

Connect inverters to the Solar-Log™.

The wiring is done using a

- self-made cable connection with RS485 data cable.

Procedure

1. If you make the cable yourself, connect the wires as shown in the following diagram:

Solar-Log™ Base RS485 (A) / (B)	COM terminal Inverter
Terminal	Terminal
► (A) 6 or (B) 10 (Data+)	► 1 RS485A IN+
► (A) 8 or (B) 12 GND	► 3 RS485A IN-GND
► (A) 9 or (B) 13 (Data-)	► 2 RS485B IN-

2. Connect further inverters to each other via OUT / IN.

Connect the inverters to each other

- Where to connect: Com connection at the bottom of the inverter.
- Wiring the inverter according to the inverter instructions.

Note

The baud rate is set via the inverter display.
The following baud rates are supported:
4800, 9600 and 19200

***Note**

Please refer to the manufacturer's instructions for the termination of the inverters.

Very important!

For the connection of the devices of the respective manufacturer, please observe the manufacturer's documentation in the respective valid version.

96.3 SolaX Power X3-MIC G2

Termination	Addressing	Interface
-*	Yes	RS485

Select “SolaXPower: X3 MIC“ during the device detection.

Supported models:

- X3-MIC-3K-G2, X3-MIC-4K-G2, X3-MIC-5K-G2, X3-MIC-6K-G2, X3-MIC-8K-G2, X3-MIC-10K-G2, X3-MIC-12K-G2, X3-MIC-15K-G2

Overview

- Integrated interface.
- Where to connect: RJ45 connection at the bottom of the inverter.
- 2-pin wiring.
- Communication address must be allocated.
- Installation steps
  - Switch off the inverters and Solar-Log™.
  - Connect inverters to the Solar-Log™.
  - Connect the inverters to each other
  - Allocate communication address.
    Settings on the inverter‘s display according to the manufacturer‘s manual.

Connect inverters to the Solar-Log™.

The wiring is done using a

- self-made cable connection with RS485 data cable.

Procedure

1. Connect the wires according to the following scheme:

Solar-Log™ Base RS485 (A) / (B)	RJ45 connection / inverter
Terminal	PIN
► (A) 6 or (B) 10 (Data+)	► 4 RS485_A
► (A) 9 or (B) 13 (Data-)	► 5 RS485_B

2. Connect additional inverters to each other according to the manufacturer‘s specifications.
3. If no further inverter is connected, terminate the inverter according to the instructions for the inverter.

Connect the inverters to each other

- Where to connect: RJ45 connection at the bottom of the inverter.
- Wiring the inverter according to the inverter instructions.

***Note**

Please refer to the manufacturer's instructions for the termination of the inverters.

Very important!

For the connection of the devices of the respective manufacturer, please observe the manufacturer's documentation in the respective valid version.

96.4 SolaX Power X3-PRO G2

Termination	Addressing	Interface
-*	Yes	RS485

Select “SolaXPower: X3 PRO“ during the device detection.

Supported models:

- X3-PRO-8K-G2, X3-PRO-10K-G2, X3-PRO-12K-G2, X3-PRO-15K-G2, X3-PRO-17K-G2, X3-PRO-20K-G2, X3-PRO-25K-G2, X3-PRO-30K-G2

Overview

- Integrated interface.
- Where to connect: RS485 connection at the bottom of the inverter.
- 2-pin wiring.
- Communication address must be allocated.
- Installation steps
  - Switch off the inverters and Solar-Log™.
  - Connect inverters to the Solar-Log™.
  - Connect the inverters to each other
  - Allocate communication address.
    Settings on the inverter‘s display according to the manufacturer‘s manual.

Connect inverters to the Solar-Log™.

The wiring is done using a

- self-made cable connection with RS485 data cable.

Procedure

1. Connect the wires according to the following scheme:

Solar-Log™ Base RS485 (A) / (B)	COM terminal Inverter
Terminal	PIN
► (A) 6 or (B) 10 (Data+)	► 1 485A
► (A) 9 or (B) 13 (Data-)	► 2 485B

2. Connect additional inverters to each other according to the manufacturer‘s specifications.
3. If no further inverter is connected, terminate the inverter according to the instructions for the inverter.

Connect the inverters to each other

- Where to connect: RS485 connection at the bottom of the inverter.
- Wiring the inverter according to the inverter instructions.

***Note**

Please refer to the manufacturer's instructions for the termination of the inverters.

Very important!

For the connection of the devices of the respective manufacturer, please observe the manufacturer's documentation in the respective valid version.

96.5 SolaX Power ZDNY series

Termination	Addressing	Interface
No	Yes	RS485

Select “SolaXPower: X3 3phase“ during the device detection.

Supported models:

- ZDNY-TL10000, ZDNY-TL12000, ZDNY-TL15000, ZDNY-TL17000

Overview

- Integrated interface.
- 2 RJ45 sockets on the outside of the inverter.
- 2-pin wiring.
- Communication address must be allocated.
- Installation steps
  - Switch off the inverters and Solar-Log™.
  - Connect inverters to the Solar-Log™.
  - Connect the inverters to each other
  - Allocate communication address.
    Address range 1 to 247
    Settings on the inverter's display according to the manufacturer's manual.

Connect inverters to the Solar-Log™.

The wiring is done using a

- self-made, shielded 8 wire data cable.
- Where to connect: RJ45 socket on the inverter

Procedure

1. If you make the cable yourself, connect the wires as shown in the following diagram:

Solar-Log™ Base RS485 (A) / (B)	RS485 inverter socket
Terminal	PIN
► (A) 6 or (B) 10 (Data+)	► Pin 4 - Data+
► (A) 9 or (B) 13 (Data-)	► Pin 5 - Data-

2. Insert the RJ45 plug into any RJ45 socket on inverter 1.

Connect the inverters to each other

- Connect using a RJ45 cable.
- Where to connect: RJ45 socket.

Procedure

1. Insert the self-made cable with the RJ45 plug into any RJ45 socket on inverter 1. Connect the other end to the terminal plug on the Solar-Log™.
2. Insert the RJ45 cable into the 2nd RJ45 socket on inverter 1 and into any RJ45 socket on inverter 2.
3. Connect the other inverters to each other in the same way.
4. Insert the terminal block connector into the Solar-Log™ RS485 socket.

Allocate communication address

1. Recommendation: Continuous numbering starting with 1.
   Address range 1 - 247.
2. Setting: Using the inverter display.
3. Procedure: Start according to the inverter's instructions.



Note

A maximum of 32 inverters can be connected per RS485 bus.

97 Solectria

97.1 Solectria V1 (>9k)

Termination	Addressing	Interface
Yes	Yes	RS485

Select “Solectria V1“ during the device detection.

Supported models:

- PVI:
  10KW, 13KW, 15KW, 100KW

Overview

- Integrated interface
- Where to connect: Terminal strip inside the inverter
- 3-pin wiring
- Communication address must be allocated.
- Installation steps
  - Switch off the inverters and Solar-Log™
  - Connect inverters to the Solar-Log™
  - Connect the inverters to each other
  - Change the communication address if required.
    Every address may only be used once.
    Address range 1 to 16.

Connect inverters to the Solar-Log™

The wiring is done using a

- self-made cable connection.
- Where to connect: Terminal strip inside the inverter

Procedure

1. If you are making the cable yourself, connect the wires as shown in the following diagram:

Solar-Log™ Base RS485 (A) / (B)	Terminal strip inside the inverter
Terminal	PIN
► (A) 6 or (B) 10 (Data+)	► RS485 A
► (A) 8 or (B) 12 GND	► RS485 G
► (A) 9 or (B) 13 (Data-)	► RS485 B

2. If no further inverter is connected, terminate the inverter according to the instructions for the inverter.

Connect the inverters to each other

- Connect with a shielded twisted-pair cable.
- Where to connect: Terminal strip inside the inverter.

Procedure

1. If you make the cable yourself, connect the wires as shown in the diagram:

Terminal strip inside the inverter	Terminal strip inside the inverter
PIN	PIN
► RS485 A	► RS485 A
► RS485 G	► RS485 G
► RS485 B	► RS485 B

2. Wire the remaining inverters to each other according to the manufacturer's specifications.
3. Terminate the last inverter according to the inverter instructions.

The RS485 connections on the terminal strip are each double connections so that the wiring can also be continued to the next inverter.

Procedure

1. Connect the data cable to the free blocks A, B and G on inverter 1.
2. Connect the other end of the cable to the blocks A, B and G on inverter 2.
3. Connect the remaining inverters in the same way.
4. Terminate the last inverter according to the manufacturer's instructions.
5. Close the inverter if no other inverters are to be connected.

Notes on inverter addresses

- Recommendation: Continuous numbering starting with 1.
- Settings: On the inverter display.
- Procedure: Follow the manufacturer's documentation for the inverter.



Note

Check the baud rate on the inverters. The baud rate has to be set to 19200 with one Stop Bit and No Parity (19200-8N1). Set the baud rate according to the instructions of the inverter manufacturer.

97.2 Solectria V2 (<9k)

Termination	Addressing	Interface
Yes	No	RS485

Select “Solectria V2“ during the device detection.

Supported models:

- PVI:
  3000, 4000, 5000, 5300

Overview

- Integrated interface
- Where to connect: RJ45 plug outside the housing floor
- 3-pin wiring
- Communication address does not have to be assigned
- Installation steps
  - Switch off the inverters and Solar-Log™
  - Connect inverters to the Solar-Log™
  - Connect the inverters to each other

Connect inverters to the Solar-Log™

The wiring is done using a

- self-made cable connection with RS485 data cable.



Caution

Risk of damage to the unit!
The Solar-Log™ also has an RJ45 socket, which must never be connected to the RJ45 socket on the inverter.

► Only connect inverters via the RS485/422 Solar-Log™ interface(s).

Procedure

1. If you are making the cable yourself, connect the wires as shown in the following diagram:

Solar-Log™ Base RS485 (A) / (B)	RJ45 inverter
Terminal	PIN
► (A) 6 or (B) 10 (Data+)	► 7 (TX A)
► (A) 8 or (B) 12 GND	► 4 or 5 (GND)
► (A) 9 or (B) 13 (Data-)	► 8 (RX B)

2. Insert the RJ45 plug into the RJ45 socket on the inverter.
3. If no further inverter is connected, terminate the inverter according to the instructions for the inverter (DIP switch on the device).

Connect the inverters to each other

- Connect using a network cable (patch cable).
- Where to connect: RJ45 socket (RJ45 R and L) on the outside of the inverter,

Procedure

1. Insert the RJ45 plug into the free RJ45 socket on the first inverter.
2. Insert the other end of the wire into any RJ45 socket on inverter 2.
3. Connect the other inverters to each other in the same way.
4. Terminate the last inverter in accordance with the inverter instructions.

Note

Every inverter has to have an unique ID number (address) between 1 and 16. Please contact Solectria Renewables for support if you have inverters with the same ID number.
Only the manufacturer can change the ID numbers.

97.3 Solectria V3 (<3k)

Termination	Addressing	Interface
Yes	Yes	RS485

Select “Solectria V3“ during the device detection.

Supported models:

- PVI:
  1800, 2500

Overview

- Integrated interface.
- Where to connect: Terminal strip inside the inverter.
- 3-pin wiring.
- The communication address has to be assigned.
- Installation steps
  - Switch off the inverters and Solar-Log™
  - Connect inverters to the Solar-Log™
  - Set the communication address according to the inverter‘s instructions.
    Address range 1 - 254.
  - Connect the inverters to each other.
  - Terminate the inverter according to the inverter‘s instructions.

Connect inverters to the Solar-Log™

The wiring is done using a

- self-made data cable.

Procedure

1. Open the inverter according to the inverter‘s instructions.
2. Pull the free wires through the wire opening in the inverter.
3. If you are making the cable yourself, connect the wires as shown in the following diagram:

Solar-Log™ Base RS485 (A) / (B)	Terminal strip inverter
Terminal	PIN
► (A) 6 or (B) 10 (Data+)	► 7 TX_A
► (A) 8 or (B) 12 GND	► 4 GND
► (A) 9 or (B) 13 (Data-)	► 6 RX_B

4. If no further inverter is connected, terminate the inverter according to the instructions for the inverter.
5. Close the inverter if no other inverters are to be connected.

Connect the inverters to each other

- Where to connect: Inside the inverter.
- Connect the wires according to the inverter‘s instructions.

Procedure

1. Open the inverter according to the inverter's instructions.
2. Connect the other inverters to each other in the same way.
3. Terminate the last inverter according to the inverter instructions.
4. Close the inverter.
5. Set the communication address via the display according to the inverter's instructions. Recommendation: Continuous numbering starting with 1. Address range 1 - 254.



Note

Check the baud rate for the inverter. The baud rate has to be set to 19200 with stop bits and without parity (19200-8N1). Follow the manufacturer's instructions for setting the baud rate.

97.4 Solectria V4

Termination	Addressing	Interface
Yes	Yes	RS485

Select “Solectria V4“ during the device detection.

Supported models:

- PVI:
  14TL, 20TL, 23TL, 28TL, 36TL, 50TL, 60TL

Overview

- Integrated interface
- Where to connect: Terminal strip inside the inverter.
- 4-pin wiring.
- The communication address has to be assigned.
- Installation steps:
  - Switch off the inverters and the Solar-Log™.
  - Connect inverters to the Solar-Log™.
  - Connect the inverters to each other.
  - Allocate communication address.
    Address range 1 to 254
    Settings on the inverter‘s display according to the manufacturer‘s manual.

Connect inverters to the Solar-Log™.

The wiring is done using a

- self-made cable connection.
- Where to connect: Terminal strip inside the inverter.

Procedure

1. If you are making the cable yourself, connect the wires as shown in the following diagram:

Solar-Log™ Base RS485 (A) / (B)	RJ45 inverter
Terminal	PIN
► (A) 6 or (B) 10 (Data+)	► RS485+
► (A) 8 or (B) 12 GND	► GND
► (A) 9 or (B) 13 (Data-)	► RS485-

2. If no further inverter is connected, terminate the inverter according to the instructions for the inverter.

Connect the inverters to each other.

- Connect using a network cable (patch cable).
- Where to connect: RJ45 sockets inside the inverter.

Procedure

1. Insert the RJ45 plug into the free RJ45 socket on the first inverter.
2. Insert the other end of the wire into any RJ45 socket on inverter 2.
3. Connect the other inverters to each other in the same way.
4. Terminate the last inverter in accordance with the inverter instructions.

97.5 Solectria V5

Termination	Adressing	Interface
Jumper	Yes	RS485

Select “Solectria V5“ during the device detection.

Supported models:

- PVI:
  3800 TL, 5200 TL, 6600 TL, 7600 TL

Overview

- Integrated interface.
- Where to connect: Terminal block inside the inverter.
- 3-pin wiring.
- The communication address has to be assigned.
- Installation steps:
  - Switch off the inverters and the Solar-Log™.
  - Connect the inverters to the Solar-Log™.
  - Connect the inverters to each other.
  - Assign the communication address.
    Address range 1 - 254.
    Settings on the inverter‘s display according to the manufacturer‘s manual.

Connect the inverters to the Solar-Log™

The wiring is done using a

- self-made connection cable.
- Where to connect: Terminal block inside the inverter.

Procedure

1. If you are making the cable yourself, connect the wires as shown in the following diagram:

Solar-Log™ Base RS485 (A) / (B)	Terminal block inside the second inverter (J1)
Terminal	PIN
► (A) 6 or (B) 10 (Data+)	► 7 TX A (RS485+)
► (A) 8 or (B) 12 GND	► 4 GND (RS485)
► (A) 9 or (B) 13 (Data-)	► 8 RX B (RS485-)

2. Terminate the inverter if no additional inverters are to be connected:
   Set the jumper to „On“ (refer to the inverter‘s instructions).

Connect the inverters to each other

- Connect with a shielded twisted-pair cable.
- Where to connect: Terminal strip inside the inverter.

Procedure

1. Open the inverter according to the inverter's instructions.
2. Connect the data cable to the terminal block in J1 of inverter 1 (according to the inverter's instructions), connect another data cable to the terminal block J2 of inverter 1 (according to the inverter's instructions), then connect it to inverter 2 via J1 (according to the inverter's instructions).
3. Connect the other inverters to each other in the same way.
4. Terminate the last inverter:
   Set the jumper to „On" (refer to the inverter's instructions).



Note

A maximum of 16 inverters can be connected per RS485 bus.
The maximum cable length is 1000 meters.

98 Solplanet

98.1 Solplanet

Termination	Adressing	Interface
Dip switch	-*	RS485

Select “Solplanet“ during the device detection.

Supported models:

- ASW3K-LT-G2, ASW4K-LT-G2, ASW5K-LT-G2, ASW6K-LT-G2, ASW8K-LT-G2, ASW10K-LT-G2, ASW12K-LT-G2, ASW13K-LT-G2, ASW15K-LT-G2, ASW17K-LT-G2, ASW20K-LT-G2, ASW3K-LT-G2-Pro, ASW4K-LT-G2-Pro, ASW5K-LT-G2-Pro, ASW6K-LT-G2-Pro, ASW8K-LT-G2-Pro, ASW10K-LT-G2-Pro, ASW12K-LT-G2-Pro, ASW13K-LT-G2-Pro, ASW15K-LT-G2-Pro, ASW17K-LT-G2-Pro, ASW20K-LT-G2-Pro, ASW25K-LT-G3, ASW27K-LT-G3, ASW30K-LT-G2, ASW30K-LT-G3, ASW33K-LT-G2, ASW33K-LT-G3, ASW36K-LT-G2, ASW36K-LT-G3, ASW40K-LT-G2, ASW40K-LT-G3, ASW45K-LT-G2, ASW45K-LT-G3, ASW50K-LT-G2, ASW50K-LT-G3, ASW60K-LT-G3 ASW75K-LT, ASW80K-LT, ASW100K-LT, ASW110K-LT

Overview

- Integrated interface.
- Where to connect: Bottom side at the inverter.
- 3-pin wiring.
- Communication address (see note*).
- Installation steps:
  - Switch off the inverters and the Solar-Log™.
  - Connect the inverters to the Solar-Log™.
  - Connect the inverters to each other.

Connect the inverters to the Solar-Log™

The wiring is done using a

- self-made connection cable.
- Where to connect: Bottom side at the inverter.

Procedure

1. Connect the wires according to the following scheme:

Solar-Log™ Base RS485 (A) / (B)	RJ45 plug inverter
Terminal	Pin
► (A) 6 or (B) 10 (Data+)	► 1 TX_RS485 A
► (A) 8 or (B) 12 GND	► 4 GND
► (A) 9 or (B) 13 (Data-)	► 2 TX_RS485 B

2. If no further inverter is connected, terminate the inverter according to the instructions for the inverter.

Connect the inverters to each other

- Connect the inverters to each other according to the inverter manual.

Note

The maximum cable length is 1000 m.

***Note**

For addressing and the maximum number of inverters in the bus, please contact the manufacturer's service department.

Note!

Settings of the inverter are made via the Solplanet app, it is important to follow the manufacturer's instructions!

Procedure for following models:

- ASW75K-LT, ASW80K-LT, ASW100K-LT, ASW110K-LT

1. Connect the wires according to the following scheme:

Solar-Log™ Base RS485 (A) / (B)	RJ45 plug inverter
Terminal	Pin
► (A) 6 or (B) 10 (Data+)	► 3 485A
► (A) 8 or (B) 12 GND	► 2 GND
► (A) 9 or (B) 13 (Data-)	► 4 485B

2. If no further inverter is connected, terminate the inverter according to the instructions for the inverter.

99 Solutronic

99.1 Solutronic SP series

Termination	Addressing	Interface
Yes	Yes	RS485

Supported models:

- SP:
  25, 35, 50, 55

Note

The same protocol must be selected on both devices In order to ensure correct communication between the Solar-Log™ and the inverters.

Protocol selection for device detection:

- Solutronic: Protocol 1
- Solutronic: Protocol 9

Overview

- Integrated interface.
- Where to connect: Terminal strip on the outside of the inverter.
- 3-pin wiring.
- Communication address must be allocated.
- All inverters must be fitted with firmware version 1.2.39 or later.
- Inverters must be grounded otherwise this could lead to problems with inverter detection.
- Installation steps:
  - Switch off the inverters and Solar-Log™.
  - Connect inverters to the Solar-Log™.
  - Connect the inverters to each other.
  - Allocate communication address.

Connect inverters to the Solar-Log™

The wiring is done using a

- self-made, shielded 3 wire data cable.

Procedure

1. If you are making the cable yourself, connect the wires as shown in the following diagram:

Solar-Log™ Base RS485 (A) / (B)	Inverter terminal strip
Terminal	Terminal
► (A) 6 oder (B) 10 (Data+)	► Pin 1 RS485-A
► (A) 8 oder (B) 12 GND	► Pin 3 GND
► (A) 9 oder (B) 13 (Data-)	► Pin 2 RS485-B

2. If no further inverter connected, terminate the inverter:
   You will find detailed instructions for setting the inverters on the Solutronic website.
3. Close the inverter if no other inverters are to be connected.

Connect the inverters to each other

- Connect using a 3 wire, shielded data cable
- Where to connect: Terminal strip on the outside of the inverter

Procedure

1. Insert the plug into the X2 socket on inverter 1.
2. Insert the other end of the wire into the X2 socket on inverter 2.
3. Connect the other inverters to each other in the same way.
4. Terminate the last inverter.
   Detailed instructions for setting the inverters are available on the Solutronic website.

Allocate communication address

- Recommendation: Continuous numbering starting with 1.
- Setting: Suing the inverter's control panel (starting with inverter firmware 2.62 parameter 89 and parameter 230 for older firmware versions):
- In addition, set the COM port to Protocol 1 - Solutronic protocol (parameter 265).
- Procedure: Start according to the inverter's instructions.

Note

The mode „Fixed cos Phi external“ or „power reduction“ has to be set according to the manufacturer‘s specifications for all of the inverters to use active and reactive power management.

99.2 Solutronic SP/SE series

Termination	Addressing	Interface
Yes	Yes	RS485

Supported models:

- SP:
  80, 100, 120
- SE:
  40S1, 40S2, 50S2, 60S2

Note

The same protocol must be selected on both devices In order to ensure correct communication between the Solar-Log™ and the inverters.

Protocol selection for device detection:

- Solutronic: Protocol 1
- Solutronic: Protocol 9

Overview

- Integrated interface.
- Where to connect: Round pin plug on the outside of the inverter.
- 3-pin wiring.
- Communication address must be allocated.
- All inverters must be fitted with firmware version 1.2.39 or later.
- Inverters must be grounded otherwise this could lead to problems with inverter detection.
- Installation steps:
  - Switch off the inverters and Solar-Log™.
  - Connect inverters to the Solar-Log™.
  - Connect the inverters to each other.
  - Allocate communication address.

Connect inverters to the Solar-Log™

- self-made, shielded 3 wire data cable.

Procedure

1. If you are making the cable yourself, connect the wires as shown in the following diagram:

Solar-Log™ Base RS485 (A) / (B)	Inverter terminal strip
Terminal	Terminal
► (A) 6 or (B) 10 (Data+)	► 2 - Data +
► (A) 8 or (B) 12 GND	► 3 - Ground
► (A) 9 or (B) 13 (Data-)	► 4 - Data -

2. Terminate pin 1 on the terminal block connector and pin 4 on the Solar-Log™ using the 120 Ω terminal resistor.
3. Terminate on the inverter in accordance with the manufacturer‘s handbook.
4. Close the inverter if no other inverters are to be connected.

Connect the inverters to each other

- Connection in the master-slave data network using an 1:1 cable with M12 plug connector (available as an optional extra from Solutronic).
- Sockets X6 and X7 are connected to each other electrically.
- Where to connect: Round pin plug on the outside of the inverter.

Procedure

1. Insert the plug into the X6 socket on inverter 1.
2. Insert the other end of the wire into the X7 socket on inverter 2.
3. Connect the other inverters to each other in the same way.
4. Terminate the last inverter according to the manufacturer's instructions.

Allocate communication address

- Setting: Using the inverter's control panel, parameter 89 in the communication menu.
  Recommendation: Continuous numbering starting with 1.
  Set this in the SSP address menu item.
- Procedure: Start according to the inverter's instructions.



Note

The mode Fixed cos Phi has to be set according to the manufacturer's specifications for all of the inverters to use active and reactive power management.

100 Steca

100.1 Steca

Termination	Addressing	Interface
Termination plug	Yes	RS485

Select “Steca: Standard“ during the device detection.

Supported models:

- coolcept StecaGrid:
  1500, 1800, 2000, 2300, 2500, 3000, 3010, 3600, 4200
- coolcept-x StecaGrid:
  1800x, 2300x, 3010x, 3600x, 4200x
- coolcept³ StecaGrid:
  3203, 4003, 4803, 5003, 5503, 6003
- coolcept³-x StecaGrid:
  3203x, 4003x, 4803x, 5503x
- StecaGrid 3phase:
  8000, 8000+, 10000, 10000+

Overview

- Integrated interface.
- Where to connect: RJ socket, on the outside of the inverter's interface board.
- 2-pin wiring.
- Communication address must be allocated.
- Installation steps:
  - Switch off the inverters and Solar-Log™.
  - Connect inverters to the Solar-Log™.
  - Connect the inverters to each other.
  - Allocate communication address.

Connect inverters to the Solar-Log™

The wiring is done using a

- self-made RS485 data cable with RJ45 plug.



Caution

Risk of damage to the unit!
The Solar-Log™ also has an RJ45 socket, which must never be connected to the RJ45 socket on the inverter.

► Only connect inverters via the RS485/422 Solar-Log™ interface(s).

Procedure

1. If you are making the cable yourself, connect the wires as shown in the following diagram:

Solar-Log™ Base RS485 (A) / (B)	RJ45 inverter
Terminal	PIN
► (A) 6 or (B) 10 (Data+)	► 1
► (A) 9 or (B) 13 (Data-)	► 2

2. Insert the RJ45 plug into any RJ45 socket on the first inverter.
3. If no further inverter connected, terminate the inverter:
   On the inverter insert the connection plug into the free RJ45 socket.

Connect the inverters to each other

- Connect using the RS485 data cable with RJ45 plug;
  Connection cables between the inverters are supplied with the inverters. Use these.
- Where to connect: RJ45 socket on the outside of the inverter

Procedure

1. Insert the RJ45 plug into the free RJ45 socket on the first inverter.
2. Insert the other end of the wire into any RJ45 socket on inverter 2.
3. Connect the other inverters to each other in the same way.
4. Terminate the last inverter.
   Insert the connection plug into the free RJ45 socket.

Allocate communication address

1. Recommendation: Continuous numbering starting with 1.
2. Setting: Using the rotating switch on the inverter interface board.
3. Procedure: Start according to the inverter's instructions.

100.2 Steca (>=17k)

Termination	Addressing	Interface
Yes	Yes	RS485

Select “Steca: USS / >=17kW“ during the device detection.

Supported models:

- StecaGrid 3phase:
  20000, 23000

Overview

- Integrated interface.
- Where to connect: RJ45 socket on the bottom of the inverter.
- 2-pin wiring.
- Communication address must be allocated.
- Installation steps:
  - Switch off the inverters and Solar-Log™.
  - Connect inverters to the Solar-Log™.
  - Connect the inverters to each other.

Select the Steca >=17k inverter during the initial configuration.

Note

To use active and reactive power management, all of the inverters need to be set to:

- ► Protocol 1
- ► 57600 baud
- ► Parameter 1164 = 2

Connect inverters to the Solar-Log™

The wiring is done using a

- self-made, shielded 2 wire data cable.

Procedure

1. Connect wires as shown in the diagram below:

Solar-Log™ Base RS485 (A) / (B)	RS485 inverter socket
Terminal	PIN
► (A) 6 or (B) 10 (Data+)	► 2
► (A) 9 or (B) 13 (Data-)	► 3

2. If no further inverter connected, terminate the inverter:
   On the sockets "RS485 OUT" with SACC-M12MS-4SC round plugs bypass the connections PIN1 to PIN2 and PIN3 to PIN4.
3. Close the inverter if no other inverters are to be connected.

Connect the inverters to each other

Connect using

- a 2-wire shielded data cable and
- 4-pin Phoenix Contact Connection plug type "M12MS SACC-4SC SH“ (two plugs included with the inverter).
- Where to connect: RS485 sockets on the bottom of the inverter.

The RS485 IN and OUT sockets are each double connections so that the wiring can be continued to the next inverter.

Procedure

1. Wiring the data cable to the "Phoenix Contact Type M12MS SACC-4SC SH“ according to the manufacturer's instructions.
2. Insert one plug into the OUT (X14B) socket of inverter 1.
3. Insert the other end of the wire into the IN socket (X15B) on inverter 2.
4. Connect the other inverters to each other in the same way.
5. Terminate the last inverter.
   On the sockets "RS485 OUT" with Phoenix contact type M12MS SACC-4SC SH bridge the connections PIN1 to PIN2 and PIN3 to PIN4.
6. Close inverters.

Allocate communication address

Recommendation: Continuous numbering starting with 1.
highest possible address: 31

Set the following parameters on the inverter's display:

- Press "F1", select Numerical list, press "ENTER".
- Set parameter number 2000 [password protection],
  press "ENTER" twice.
- Enter 72555, press "ENTER"
- Set parameter number 0406, press "ENTER"
- Select sub parameter 0406,3, press "ENTER"
- Enter figure for communication x
  [x = continuous numbering starting with 1; highest possible address: 31], press "ENTER". 31], press "ENTER".

After configuring on the display:

- Using the installed DC isolating switch turn the inverters on and off briefly so that the settings are activated.
- Set the date and time on the inverter as shown in the inverter instructions.

101 Sungrow

101.1 Sungrow

Termination	Addressing	Interface
120 Ω resistor	Yes	RS485 / Ethernet

Select “Sungrow“ during the device detection.

Supported models:

- SG-String:
  SG1K5TL, SG2KTL, SG2KTL-S, SG2K5TL, SG2K5TL-S, SG3K-B, SG3KTL, SG3KTL-EC, SG3KTL-ECV21, SG3KTL-D, SG3KTL-M, SG3KTL-S, SG3K6TL-D, SG3K6TL-S, SG4KTL, SG4K4J, SG4KTL-EC, SG4KTL-ECV21, SG4KTL-M, SG-4KTL-S, SG4K6TL-D, SG5K-B, SG5K-C, SG5KTL, SG5KTL-EC, SG5KTL-M, SG5KTL-MT, SG6K-B, SG6K-C, SG6KTL, SG6KTL-MT, SG6KTL-EC, SG8KTL, SG8KTL-M, SG8KTL-EC, SG10K3, SG10KTL, SG10KTL-M, SG10-KTL-MT, SG-10KTL-EC, SG12KTL, SG12KTL-M, SG12KTL-EC, SG15KTL, SG15KTL-M, SG15KTL-EC, SG16K6J, SG17KTL-M, SG20KTL, SG20KTL-M, SG20KU, SG24MX, SG30K3, SG30KJ, SG30KTL, SG30KTL-M, SG30KTL-V31, SG30KTL-V21S-G34KJ, SG30KU, SG33K3J, SG33KTL-M, SG36KTL, SG36KTL-M, SG36KU, SG40KTL, SG40KTL-M, SG49K5J, SG50K3, SG50KTL, SG50KTL-M, SG50KTL-M-20, SG55KTL, SG56KTL, SG56KU, SG60KTL, SG60KTL-M, SG60KU, SG60KU-M, SG80KTL, SG80KTL-M, SG111HV, SG125HV, SG125HV-20
- SG-Central:
  SG100J, SG100J-V21, SG100K3, SG100KC, SG100KC-O, SG100KLV, SG100KU, SG100KU-O, SG125K, SG250K3, SG250KC, SG250KTL, SG250KU, SG500J-V11, SG500K3, SG500KTL, SG500LV, SG500MX, SG500MX-M, SG630KTL, SG630MX, SG630MX-M, SG750MX, SG800MX, SG1000HV, SG1000HV-V12, SG1000KTL, SG1000MX, SG1000TL, SG1250, SG1250HV, SG1250-MV, SG1500HV, SG2000, SG2000-MV
- String:
  LP-P34KSG
- SG-String CX:
  SG25CX-SA, SG33CX, SG36CX-US, SG40CX, SG49.5CX-JP, SG50CX, SG60CX-US, SG75CX, SG100CX, SG110CX
- SG-String CX-P2:
  SG15CX-P2-LV, SG20CX-P2-LV, SG25CX-P2, SG25CX-P2-LV, SG30CX-P2, SG33CX-P2, SG36CX-P2, SG40CX-P2, SG50CX-P2, SG110CX-P2, SG125CX-P2
- SG-String HX:
  SG110HX-CN, SG125HX, SG125HX-JP, SG200HX-US, SG250HX, SG250HX-IN, SG250HX-US, SG285HX, SG320HX, 320HX-20, SG333HX, SG350HX, SG350HX-20, SG350HX-US
- SG-String RS:
  SG3.0RS-L, SG4.0RS-L, SG5.0RS-L, SG5.5RS-JP, SG6.0RS-L, SG8.0RS-L, SG9.0RS-L, SG10RS-L
- SG-String RT:
  SG3.0RT, SG3.0RT-P2, SG4.0RT, SG4.0RT-P2, SG5.0RT, SG5.0RT-P2, SG6.0RT, SG6.0RT-P2, SG7.0RT, SG7.0RT-P2, SG8.0RT, SG8.0RT-P2, SG10RT, SG10.0RT-P2, SG12RT, SG12.0RT-P2, SG15RT, SG15.0RT-P2, SG17RT, SG17.0RT-P2, SG20RT, SG20.0RT-P2, SG23RT, SG23RT-P2, SG25RT, SG25RT-P2

Overview (RS485)

- Integrated interface.
- Where to connect: RJ45 socket / for individual models alternatively via RS485 terminal block (please, refer to the manufacturer's manual).
- 2-pin wiring.
- Communication address must be allocated.
- Installation steps:
  - Switch off the inverters and Solar-Log™.
  - Connect inverters to the Solar-Log™.
  - Connect the inverters to each other.
  - Allocate communication address.

Connect inverters to the Solar-Log™

The wiring is done using a

- self-made shielded, 2-wire data cable.

NOTE!

The following table for models not listed:

Solar-Log™ Base RS485 (A) / (B)	RS485 terminal block of the inverter
Terminal	Pin
► (A) 6 or (B) 10 (Data+)	► RS485-A / RS485+ / Data A+ / A+
► (A) 9 or (B) 13 (Data-)	► RS485-B / RS485- / Data B- / B+

Please refer to the inverter manufacturer's manual for the corresponding PIN designations.

Procedure for the following models:

- SG1K5TL, SG2K5TL, SG3KTL, SG3KTL-EC, SG3KTL-M, SG4KTL, SG4KTL-EC, SG4KTL-M, SG5KTL-EC, SG5KTL-M, SG6KTL-EC, SG8KTL-EC, SG10K3, SG10KTL, SG10KTL-EC, SG12KTL, SG12KTL-EC, SG15KTL, SG15KTL-EC, SG-20KTL, SG30K3, SG30KU, SG33KTL-M, SG36KU, SG40KTL, SG50K3, SG50KTL-M, SG60KTL, SG60KTL-M, SG60KU, SG60KU-M, SG80KTL, SG100K3, SG100KC, SG100KU, SG250K3, SG500KTL

1. If you are making the cable yourself, connect the wires as shown in the following diagram:

Solar-Log™ Base RS485 (A) / (B)	Inverter
Terminal	PIN
► (A) 6 or (B) 10 (Data+)	► Data A+ (RS485A)
► (A) 9 or (B) 13 (Data-)	► Data B- (RS485B)

2. If no further inverter is connected, terminate the inverter according to the instructions for the inverter.

Connect the inverters to each other

- Wiring according to the inverter instructions.

Allocate communication address

- Recommendation: Continuous numbering starting with 1.
- Setting: Using the inverter display
- Procedure: Start according to the inverter's instructions

Procedure with the following model:

- SG110CX

Solar-Log™ Base RS485 (A) / (B)	RS485 terminal block inverter
Terminal	Pin
► (A) 6 or (B) 10 (Data+)	► 2 RS485 A+ OUT
► (A) 8 or (B) 12 GND	► 3 GND
► (A) 9 or (B) 13 (Data-)	► 5 RS485 B- OUT

Procedure for the following models:

- SG30CX, SG33CX, SG40CX, SG50CX

Solar-Log™ Base RS485 (A) / (B)	RS485 terminal block inverter
Terminal	Pin
► (A) 6 or (B) 10 (Data+)	► 2 RS485 A+ OUT
► (A) 9 or (B) 13 (Data-)	► 4 RS485 B- OUT

Procedure for the following models:

- SG5.5RS-JP, SG25CX-SA, SG25CX-P2, SG30CX-P2, SG33CX-P2, SG36CX-P2, SG36CX-US, SG40CX-P2, SG50CX-P2, SG60CX-US, SG110CX-P2, SG125HX, SG125HX-JP, SG125CX-P2, SG250HX, SG250HX-US, SG3.0RT, SG4.0RT, SG5.0RT, SG5.0RT-P2, SG6.0RT, SG6.0RT-P2, SG7.0RT, SG8.0RT, SG8.0RT-P2, SG10RT, SG10.0RT-P2, SG12RT, SG12.0RT-P2, SG15RT, SG15.0RT-P2, SG17RT, SG17.0RT-P2, SG20RT, SG20.0RT-P2

Solar-Log™ Base RS485 (A) / (B)	RS485 terminal block inverter
Terminal	Pin
► (A) 6 or (B) 10 (Data+)	► A1 OUT
► (A) 9 or (B) 13 (Data-)	► B1 OUT

Procedure for the following models:

- SG200HX-US, SG285HX, SG320HX, SG333HX, SG350HX, SG350HX-US

Solar-Log™ Base RS485 (A) / (B)	RS485 COM1 inverter
	Pin
► (A) 6 or (B) 10 (Data+)	► 1 RS485A+
► (A) 9 or (B) 13 (Data-)	► 3 RS485B-

Note!

Some inverters can also be connected via Ethernet. See description below.
Please also refer to the manufacturer's manual!

Procedure for Ethernet

Connect the inverters to the Solar-Log™

- The wiring is done using a network cable (patch cable) and
- the Ethernet router.

Connect the inverters to each other

The inverters are connected together using the RJ45 interface and, if needed, a router.
Follow the connection setup according to the inverter's instructions.

Assigning IP addresses

- In addition to a static, fixed IP, a dynamic IP address can also be assigned.
- Please select an IP address with the same class C subnet as the Solar-Log™.
- Example: The Solar-Log™ has the IP address 192.168.178.49.
- The inverter in this case has to have a free IP address in the same range (from 192.168.178.1 to 192.168.178.254).
- Procedure: Start according to the inverter's instructions.

*Dynamic IP address (DHCP) for detection and communication:

The Solar-Log™, inverter and router have to be set to obtain their IP addresses automatically (DHCP) and be in the same class C subnet.

Note for the RT series!

Only a maximum of 5 inverters can be connected to one bus.

Note!

Settings of the inverter are made via the Sungrow app - it is essential to follow the manufacturer's instructions!

Very important note!

When wiring via RS485, parallel operation with the Solar-Log and the WiFi dongle is not possible!
If the WiFi dongle is plugged into the inverter during the detection process, correct detection of the inverter via the Solar-Log is not possible.
Subsequent insertion of the WiFi dongle into the inverter is also not recommended, as this can permanently disrupt communication between the inverter and Solar-Log.
An additional installation of the manufacturer's data logger in parallel operation with the Solar-Log is also not recommended, as this can also lead to communication problems with the Solar-Log.

102 SunPower

102.1 SunPower SPR-F-Model with Fronius ComCard

Termination	Addressing	Interface
Connection plug Bridge 4-3 + 5-6	Yes	RS422

Select “Fronius“ during the device detection.

Supported models:

- SPR-F:
  10000F, 10001F, 11401f, 12000F, 12001F-3, 3300F, 3301F, 3501F-1, 3801F, 4000F, 4001F-1, 6500F, 6501F, 7501F, 8000F, 8001F

Overview

- The Fronius ComCard RS422 interface integrated as an option;
  otherwise can be retrofitted using „ComCard retrofit“.
- Where to connect: RJ45 socket on the outside of the inverter.
- 4-pin wiring.
- Communication address must be allocated.
  - Recommendation: Continuous numbering starting with 1.
  - Setting: Using the inverter display.
  - Procedure: Start according to the inverter‘s instructions.
- Installation steps:
  - Switch off the inverters and Solar-Log™.
  - (Install Fronius ComCard RS485 interface into the inverter).
  - Connect inverters to the Solar-Log™.
  - Connect the inverters to each other.
  - Allocate communication address.

Installing Fronius ComCard RS485 interface

Procedure

► Install the Fronius ComCard RS485 interface in the inverter in accordance with the interface board installation instructions.

Connect inverters to the Solar-Log™

The wiring is done using a

- self-made data cable with RJ45 plug.



Caution

Risk of damage to the unit!
The Solar-Log™ also has an RJ45 socket, which must never be connected to the RJ45 socket on the inverter.

► Only connect inverters via the RS422 interface.

Procedure

1. If you are making the cable yourself, connect the wires as shown in the following diagram:

Solar-Log™ Base RS422	RJ45 inverter
Terminal	PIN
► 6 (T/RX+)	► 4
► 9 (T/RX-)	► 5
► 10 (R/TX+)	► 3
► 13 (R/TX-)	► 6

2. In the inverter insert the RJ45 plug into the IN socket.
3. If no further inverter connected, terminate the inverter:
   Insert the supplied connection plug into the RJ45 OUT socket on the inverter.
   The connection plug is an 8-pin dummy plug with bridged wires: Bridge wires 3 and 4 and wires 5 and 6.

Connect the inverters to each other

- Connect using a network cable (patch cable).
- Where to connect: RJ45 socket on the outside of the inverter.

Procedure

1. Insert the RJ45 plug in inverter 1 into the OUT socket.
2. Insert the other end of the wire into the IN socket on inverter 2.
3. Connect the other inverters to each other in the same way.
4. Terminate the last inverter.
   Insert the supplied connection plug into the RJ45 OUT socket.
5. Close inverters.

Allocate communication address

- Recommendation: Continuous numbering starting with 1.
- Setting: Using the inverter display
- Procedure: Start according to the inverter's instructions

102.2 SunPower SPR-M-Model connection using special RS485 piggyback card

Termination	Addressing	Interface
Jumper	No	RS485

Select “SMA: Data1“ during the device detection.

Supported models:

- SPR-M:
  1100M, 2500M, 3300M, 3800M, 4600M, 5000M, 6000M, 7000M

Overview

- Interface not integrated; retrofit the special RS485 piggyback card.
- Where to connect: Terminal strip inside the inverter on the piggyback.
- Communication address does not have to be assigned.
- 4-pin wiring.
- Installation steps:
  - Switch off the inverters and Solar-Log™.
  - Installing the special RS485 piggyback in inverters.
  - Connect inverters to the Solar-Log™.
  - Connect the inverters to each other.

Installing the special RS485 piggyback in inverters

Procedure

1. Open the inverter as shown in the inverter‘s instructions.
2. The Piggy Back has to be installed on the inverter‘s circuit board aligned to the left side under the pin contract strip (Figure 3, left).
   The print „unten [down]“ on the board has to be visible on the bottom left-hand side (Figure 3, right).

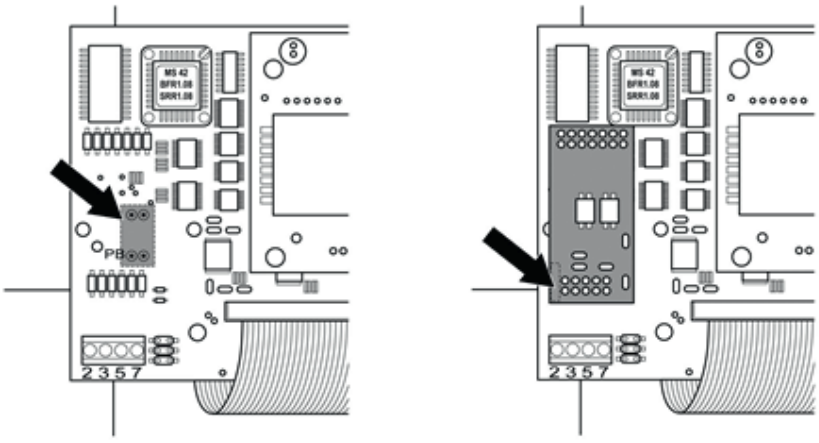

Fig.: Control board before and after installation of the piggyback (Source: SMA)

Note about the Special PiggyBack:

If the Special PiggyBack is used a 12V power supply unit must be used.

Connect inverters to the Solar-Log™

The wiring is done using a

- self-made, shielded 4 wire data cable.

Procedure

1. Pull the free wires through the wire opening in the inverter.
2. If you are making the cable yourself, connect the wires as shown in the following diagram:

Solar-Log™ Base RS485 (A) / (B)	Inverter terminal strip
Terminal	Terminal
► (A) 6 or (B) 10 (Data+)	► 2
► 12 V (see note previous page)	► 3
► (A) 8 or (B) 12 GND	► 5
► (A) 9 or (B) 13 (Data-)	► 7

3. Pull the wire in the inverter through the insulation sleeve attached to the piggy back.
   The wire must be enclosed in the insulating hose inside the inverter.
4. Ground the connection: Connect terminal 5 on the inverter to the inverter housing using the supplied flat strip connector.
5. If no further inverter connected, terminate the inverter:
   Put the supplied jumper onto the lower pins on the connector strip.

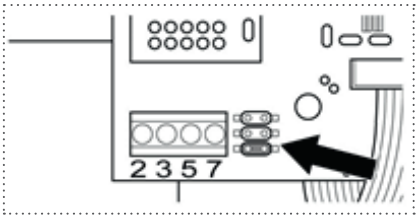

Fig.: Piggyback - insert jumper (Source: SMA)

6. Close the inverter if no other inverters are to be connected.

Connect the inverters to each other

- Connect using a 4 wire, shielded data cable (e.g. a 25 m ring cable, Solar-Log GmbH order 220014).
- Where to connect: Terminal block in inverter (on the retrofitted RS485 interface).

Procedure

1. Pull the wire in the inverter through the insulation sleeve attached to the piggy back
   The wire must be enclosed in the insulating hose inside the inverter.
2. Connect all 4 contacts (2, 3, 5, 7) on the terminal strip of inverter 1 to inverter 2

Note

A diagram for wiring in SMA combined mode can be found in the appendix..

3. Connect the other inverters to each other in the same way.
4. Terminate the last inverter.
   Put the supplied jumper onto the lower pins on the connector strip.

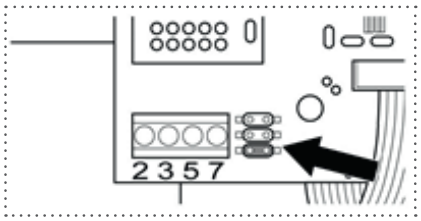

Fig.: Jumper SMA (Source: SMA)

5. Close inverters.

102.3 SunPower SPR-M-Model connect with original SMA RS485 piggy back and the SMARS485 data module

Termination	Addressing	Interface
Resistor jumper	No	RS485

Select “SMA: Data1“ during the device detection.

Supported models:

- SPR-M:
  1100M, 2500M, 3300M, 3800M, 4600M, 5000M, 6000M, 7000M

Overview

- Interface not integrated; retrofit the SMA RS485 piggyback card.
- Where to connect: Terminal strip inside the inverter on the piggyback.
- Communication address does not have to be assigned.
- 3-pin wiring.
- Installation steps:
  - Switch off the inverters and Solar-Log™.
  - Installing the original SMA RS485 piggyback in the inverter.
  - Connect inverters to the Solar-Log™.
  - Connect the inverters to each other.

Installing the original SMA RS485 piggyback in the inverter

Procedure

► Install the original SMA RS485 piggy back in the inverter in accordance with the interface board installation instructions.

Connect inverters to the Solar-Log™

The wiring is done using a

- self-made, shielded 3 wire data cable.

Procedure

1. Open the inverter as shown in the inverter‘s instructions.
2. Pull the free wires through the wire opening in the inverter.
3. Pull the cable through the insulation tube.

Note

The wire must be enclosed in the insulating hose inside the inverter.

4. If you are making the cable yourself, connect the wires as shown in the following diagram:

Solar-Log™ Base RS485 (A) / (B)	Inverter terminal strip
Terminal	Terminal
► (A) 6 or (B) 10 (Data+)	► 2
► (A) 8 or (B) 12 GND	► 5
► (A) 9 or (B) 13 (Data-)	► 7

5. Ground the connection: Connect terminal 5 on the inverter to the inverter housing using the supplied flat strip connector.
6. If no further inverter connected, terminate the inverter:
   Put the supplied jumper onto the lower pins on the connector strip.

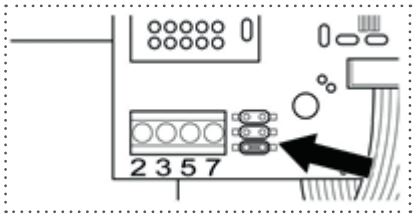

Fig.: Jumper SMA (Source: SMA)

7. Close the inverter if no other inverters are to be connected.

Connect the inverters to each other

- Connect using a 3 wire, shielded data cable.
- Where to connect: Terminal block in inverter (on the retrofitted RS485 interface).

Procedure

1. Open the inverter as shown in the inverter's instructions.
2. Connect the inverter in accordance with the inverter installation instructions.
3. If no further inverter connected, terminate the inverter:
   Put the supplied jumper onto the lower pins on the connector strip.

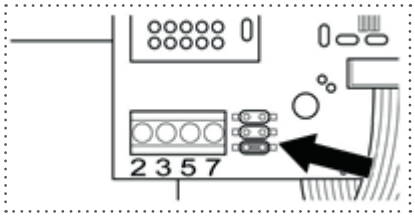

Fig.: Jumper SMA (Source: SMA)

4. Close inverters.

Note

A diagram for wiring in SMA combined mode can be found in the appendix.

103 Suntigua

103.1 Suntigua

Termination	Addressing	Interface
DIP switch	Yes	RS485

Select “Suntigua“ during the device detection.

Supported models:

- ST3000, ST4000, ST5000, ST 5000T, ST 8000T, ST 10000T, ST 15000T

Overview

- Integrated interface.
- Where to connect: Terminal strip inside the inverter.
- 2-pin wiring.
- Communication address must be allocated.
- Installation steps:
  - Switch off the inverters and Solar-Log™.
  - Connect inverters to the Solar-Log™.
  - Connect the inverters to each other.
  - Allocate communication address.

Connect inverters to the Solar-Log™

The wiring is done using a

- self-made, shielded 2 wire data cable.

Procedure

1. Open the inverter as shown in the inverter's instructions.
2. If you are making the cable yourself, connect the wires as shown in the following diagram:

Solar-Log™ Base RS485 (A) / (B)	Terminal strip inside the inverter
Terminal	RS485 terminal
► (A) 6 or (B) 10 (Data+)	► 1 T/R 1+
► (A) 9 or (B) 13 (Data-)	► 2 T/R 1-

3. If no further inverter connected, terminate the inverter:
   In the inverter, set the DIP switch for the terminal resistor to ON.
4. Close inverters.

Connect the inverters to each other

- Where to connect: Terminal strip inside the inverter.
- 2-pin wiring.

Procedure

1. Open the inverter as shown in the inverter's instructions.
2. If you are making the cable yourself, connect the wires as shown in the following diagram:

Terminal strip inside the inverter	Terminal strip inside the inverter
RS485 terminal	RS485 terminal
► 1 T/R 1+	► 1 T/R 2+
► 2 T/R 1-	► 2 T/R 2-

3. Connect terminals A and B on inverter 1 to the corresponding terminals on inverter 2.
4. Connect the other inverters to each other in the same way.
5. Terminate the last inverter:
   Set the DIP switch for the terminal resistor to ON.
6. Close inverters.

Allocate communication address

- Recommendation: Continuous numbering starting with 1.
- Setting: Using the inverter DIP switch
- Procedure: Start according to the inverter's instructions

104 Sunville

104.1 Sunville

Termination	Addressing	Interface
Yes	No	RS422

Select “Sunville“ during the device detection.

Overview

- Interface not integrated; Retrofit RS485 interface board.
- 4-pin cable – only on RS422 interface.
- Communication address does not have to be assigned.
- Multi-string technology.

The Sunville inverters are fitted with 1 or 3 MPP trackers depending on the model. Each string input is monitored separately and ideally adjusted to the connected modules.

The Solar-Log™ automatically detects how many inverters and strings are active during inverter detection.

Note

The order in which the inverters are displayed in the Solar-Log™ after detection is random. We strongly recommend that you change the order of the inverters immediately after detection at startup, in the Configuration | Devices | Configuration | Order dialog box.

► The inverters can be identified using the displayed serial number.

- Installation steps:
  - Switch off the inverters and Solar-Log™.
  - Install the RS485 interface in the inverter.
  - Connect inverters to the Solar-Log™.
  - Connect the inverters to each other.

Installing the RS485 interface

Procedure

► Insert the RS485 interface in the bottom of the inverter in accordance with the interface board installation instructions and screw in.

Connect inverters to the Solar-Log™

The wiring is done using a

- self-made, shielded 4 wire data cable.

Note

Only connect inverter using the RS422 interface.

Procedure

1. Open the inverter as shown in the inverter's instructions.
2. Pull the free wires through the wire opening in the inverter.
3. If you are making the cable yourself, connect the wires as shown in the following diagram:

Solar-Log™ Base RS422	Inverter terminal strip
Terminal	Terminal
► 6 (T/RX+)	► R+
► 9 (T/RX-)	► R-
► 10 (R/TX+)	► T+
► 13 (R/TX-)	► T-

4. Close the inverter if no other inverters are to be connected.

Connect the inverters to each other

- Connect using a 4 wire, shielded data cable.
- Where to connect: Terminal strip inside the inverter (on the retrofitted RS485 interface).

Procedure

1. Open the inverter as shown in the inverter's instructions.
2. Connect terminals R+, R-, T+ and T- of inverter 1 to the corresponding terminals on inverter 2.
3. Connect the other inverters to each other in the same way.
4. Close inverters.

105 Sunways

105.1 Sunways - AT/NT/PT

Termination	Addressing	Interface
Yes	Yes	RS485

Select “Sunways“ during the device detection.

Supported models:

- AT-Serie:
  All
- NT-Serie:
  NT up to 10 kW, NT3+ 10000, NT3+ 11000, NT3+ 12000
- PT-Serie:
  PT30k, PT33k

Overview

- Integrated interface.
- Where to connect: Terminal strip inside the inverter.
  - 750 V models: 4 RS485 terminals on 10 pin terminal strip.
  - 850 V models: 4 pin RS485 terminal strip.
- 2-pin wiring.
- Communication address must be allocated.
- Installation steps:
  - Switch off the inverters and Solar-Log™.
  - Connect inverters to the Solar-Log™.
  - Connect the inverters to each other.
  - Allocate communication address.

Connect inverters to the Solar-Log™

The wiring is done using a

- self-made, shielded 2 wire data cable.

Procedure

1. Open the inverter as shown in the inverter's instructions.
2. Pull the free wires through the wire opening in the inverter.
3. If you are making the cable yourself, connect the wires as shown in the following diagram:

Solar-Log™ Base RS485 (A) / (B)	Inverter terminal strip
Terminal	Terminal
► (A) 6 or (B) 10 (Data+)	► RS485+
► (A) 9 or (B) 13 (Data-)	► RS485-

4. If no further inverter is connected, terminate the inverter according to the instructions for the inverter.
5. Close the inverter if no other inverters are to be connected.

Connect the inverters to each other

- Connect using a 2 wire, shielded data cable.
- Where to connect: Terminal strip inside the inverter.
  - 750 V models: 4 RS485 terminals on 10 pin terminal strip.
  - 850 V models: 4 pin RS485 terminal strip.

The RS485 connections on the terminal strip are each double connections so that the wiring can be continued to the next inverter.

Procedure

1. Open the inverter as shown in the inverter's instructions.
2. Connect terminals RS485+ and RS485- on all inverters to the two data cable wires in accordance with the inverter instructions.
3. Terminate the last inverter in accordance with the inverter instructions.
4. Close inverters.

Allocate communication address

- Recommendation: Continuous numbering starting with 1.
- Setting: Using the inverter display.
- Procedure: Start according to the inverter's instructions.

106 Surpass SSE

106.1 Surpass SSE - SPS series

Termination	Adressing	Interface
-	Yes	RS485

Select “Sunways“ during the device detection.

Supported models:

- SPS1KS-C, SPS1K5S-C, SPS2KS-C, SPS3KD-C, SPS3KS-C, SPS3K6D-C, SPS3K6S-C, SPS4KTL-B, SPS4K2D-C, SPS4K2S-C, SPS4K6D-C, SPS4K6S-C, SPS5KTL-B, SPS6KTL-B, SPS8KTL, SPS10KTL-B, SPS12KTL-B, SPS15KTL-B, SPS17KTL-B, SPS20KTL-B, SPS20KTL-BM, SPS25KTL-B, SPS30KTL, SPS33KTL, SPS35KTL, SPS40KTL, SPS50KTL, SPS60KTL, SPS750S-C

Overview

- Integrated interface.
- Connection via RS485.
- 3-pin wiring.
- The communication address has to be assigned (is set to 1 by default).
- Installation steps:
  - Switch off the inverters and Solar-Log™.
  - Connect inverters to the Solar-Log™.
  - Connect the inverters to each other.
  - Allocate communication address.

Connect inverters to the Solar-Log™

The wiring is done using a

- Self-made cable connection using the RS485 connector.

Procedure

1. If you are making the cable yourself, connect the wires as shown in the following diagram:

Solar-Log™ Base RS485 (A) / (B)	RS485 connector
Terminal	Pin
► (A) 6 or (B) 10 (Data+)	► 2 (RS485+)
► (A) 8 or (B) 12 GND	► 4 GND
► (A) 9 or (B) 13 (Data-)	► 3 (RS485-)

2. RS485 connector an den Wechselrichter, gemäß Anleitung zum Wechselrichter, anschliessen.

Connect the inverters together

- Start according to the inverter‘s instructions.

Assign the communication address

- Start according to the inverter's instructions.



Note

Power reductions of less than 10% are set by the inverters to 10%.

107 Sustainable Energy

107.1 Sustainable Energy

Termination	Addressing	Interface
Terminating plug	Yes	RS485

Select “Sunergy“ during the device detection.

Supported models:

- PARALAX:
  Paralex 5000A, Paralex 5000A60, Paralex 5000C, Paralex 5000C60
- SUNERGY:
  Sunergy 6200E60
- SUNERGY ELV:
  Sunergy ELV 208, Sunergy ELV 230, Sunergy ELV 240
- SUNERGY LV:
  Sunergy LV 208, Sunergy LV 240

Overview

- Integrated interface.
- 2-pin wiring.
- Communication address must be allocated.
- Installation steps:
  - Switch off the inverters and Solar-Log™.
  - Connect inverters to the Solar-Log™.
  - Connect the inverters to each other.
  - Allocate communication address.

Connect inverters to the Solar-Log™

The wiring is done using a

- self-made, shielded 2 wire data cable.

Procedure

1. If you are making the cable yourself, connect the wires as shown in the following diagram:

Solar-Log™ Base RS485 (A) / (B)	Inverter terminal strip
Terminal	Terminal
► (A) 6 or (B) 10 (Data+)	► 4 (A in)
► (A) 9 or (B) 13 (Data-)	► 3 (B in)

2. If no further inverter connected, terminate the inverter:
   Insert 120 Ω terminal resistor.

Connect the inverters to each other

- Connect using a 2 wire, shielded data cable.
- Where to connect: Terminal strip inside the inverter.

Procedure

1. Connect terminal 2 (A out) on inverter 1 to terminal 4 (A in) on inverter 2.
2. Connect terminal 1 (B out) on inverter 1 to terminal 3 (B in) on inverter 2.
3. Connect the other inverters to each other in the same way.
4. Terminate the last inverter. Insert 120 Ω terminal resistor.

Allocate communication address

- Recommendation: Continuous numbering starting with 1.
- Setting: Using PC software for configuring inverters.
- Procedure: Start according to the inverter's instructions.

108 TBEA

108.1 TBEA

Termination	Addressing	Interface
120 Ω resistor	Yes	RS485

Supported models (selection during device detection „TBEA: Sunoasis 10-20k“):

- TS10KTL, TS12KTL, TS15KTL, TS17KTL, TS20KTL

Supported models (selection during device detection „TBEA: Sunoasis TS50/60KTL“):

- TS50KTL-S

Overview

- Integrated interface.
- Where to connect: Round sockets on the outside of the inverter.
- 2-pin wiring.
- The communication address has to be assigned.
- Installation steps:
  - Switch off the inverters and Solar-Log™.
  - Connect inverters to the Solar-Log™.
  - Connect the inverters to each other.
  - Assign the communication address; address range 1 to 247.

Connect inverters to the Solar-Log™

The wiring is done using a

- self-made, shielded 2 wire data cable with round plug.

Procedure

1. If you are fabricating the cable yourself, connect the wires as shown in the following diagram:

Solar-Log™ Base RS485 (A) / (B)	Inverter
Terminal	PIN
► (A) 6 or (B) 10 (Data+)	► A1 or A2
► (A) 9 or (B) 13 (Data-)	► B1 or B2

2. Insert the round plug into the COM round socket 1 on the inverter.
3. If no further inverter is connected, terminate the inverter according to the instructions for the inverter.

Connect the inverters to each other

- Connect using a data cable with a round plug
- Where to connect: Round sockets on the outside of the inverter.

Procedure

1. Insert the round plug into the COM round socket 1 on inverter 1.
2. Connect additional inverters to each other according to the inverter instructions.
3. Terminate the last inverter according to the inverter instructions.

Allocate communication address

- Recommendation: Continuous numbering starting with 1.
  Address range 1 - 247.
- Setting: Using the inverter's display.
- Procedure: Start according to the inverter's instructions.



Note

Both bus ends have to be terminated.

109 Trannergy

109.1 Trannergy

Termination	Addressing	Interface
Yes	No	RS422

Select “Trannergy“ during the device detection.

Supported models:

- HYI:
  3200TL, 5400TL
- PVI:
  3.6KTL-T, 4.2KTL-T, 6KTL-T, 8KTL, 10KTL, 12KTL, 17KTL, 20KTL, 1300TL, 1800TL, 2300TL, 2700TL, 3000TL, 3200TL, 4000TL, 4600TL, 5400TL
- TRB:
  4000TL, 5000TL, 6000TL, 8000TL, 9000TL
- TRI:
  025KTL, 030KTL, 033KTL
- TRM:
  025KTL, 030KTL, 033KTL, 035KTL
- TRN:
  010KTL, 012KTL, 015KTL, 017KTL, 020KTL, 025KTL

Overview

- Interface not integrated; Retrofit RS485 interface board.
- 4-pin cable – only on RS422 interface.
- Communication address does not have to be assigned.
- Multi-string technology.

The Trannergy inverters are fitted with 1 or 3 MPP trackers depending on the model. Each string input is monitored separately and ideally adjusted to the connected modules.

The Solar-Log™ automatically detects how many inverters and strings are active during inverter detection.

Note:

The order in which the inverters are displayed in the Solar-Log™ after detection is random. We strongly recommend that you change the order of the inverters immediately after detection at startup, in the Configuration | Devices | Configuration | Order dialog box.
► The inverters can be identified using the displayed serial number.

- Installation steps:
  - Switch off the inverters and Solar-Log™.
  - Install the RS485 interface in the inverter.
  - Connect inverters to the Solar-Log™.
  - Connect the inverters to each other.

Installing the RS485 interface

Procedure

► Insert the RS485 interface in the bottom of the inverter in accordance with the interface board installation instructions and screw in.

Connect inverters to the Solar-Log™

The wiring is done using a

- self-made, shielded 4 wire data cable.



Note

Only connect inverter using the RS422 interface.

Procedure

1. Open the inverter as shown in the inverter's instructions.
2. Pull the free wires through the wire opening in the inverter.
3. If you are making the cable yourself, connect the wires as shown in the following diagram:

Solar-Log™ Base RS422	Terminal strip inverter
Terminal	Terminal
► 6 (T/RX+)	► R+
► 9 (T/RX-)	► R-
► 10 (R/TX+)	► T+
► 13 (R/TX-)	► T-

4. If no further inverter is connected, terminate the inverter according to the instructions for the inverter.
5. Close the inverter if no other inverters are to be connected.

Connect the inverters to each other

- Connect using a 4 wire, shielded data cable..
- Where to connect: Terminal strip inside the inverter (on the retrofitted RS485 interface)

Procedure

1. Open the inverter as shown in the inverter's instructions.
2. Connect terminals R+, R-, T+ and T- of inverter 1 to the corresponding terminals on inverter 2.
3. Connect the other inverters to each other in the same way.
4. Terminate the last inverter according to the inverter instructions.
5. Close inverters.

110 Vaillant

110.1 Vaillant – auroPOWER VPI /1 and VPI (RS485)

Termination	Addressing	Interface
Resistor Switch	Yes	RS485

Select “Vaillant“ during the device detection.

Overview

- VPI until 2005 RS485 interface can be retrofitted by the manufacturer.
- Interface integrated - activate using display.
- Where to connect: Terminal strip inside the inverter.
- 2-pin wiring.
- Communication address must be allocated.
- Installation steps:
  - Switch off the inverters and Solar-Log™.
  - Models until 2005 Retrofit RS485 interface.
  - Connect inverters to the Solar-Log™.
  - Connect the inverters to each other.
  - Allocate communication address.

Connect inverters to the Solar-Log™

The wiring is done using a

- self-made, shielded 2 wire data cable.

Procedure

1. Open the inverter as shown in the inverter's instructions.
2. Pull the free wires through the wire opening in the inverter.
3. If you are making the cable yourself, connect the wires as shown in the following diagram:

Solar-Log™ Base RS485 (A) / (B)	Inverter terminal strip
Terminal	Terminal
► (A) 6 or (B) 10 (Data+)	► B
► (A) 9 or (B) 13 (Data-)	► A

4. If no further inverter connected, terminate the inverter:
   In the inverter connect the free terminal A to terminal B using the supplied 330 Ω terminating resistor.
   Devices without a transformer: From unit generation VPI xx00 /2 the 330 Ω resistor is switched on using the DIP switch. When the unit is delivered the terminal resistor is switched on.
5. Close the inverter if no other inverters are to be connected.

Connect the inverters to each other

- Connect using a 2 wire, shielded data cable.
- Where to connect: Terminal strip inside the inverter.

The RS485 connections on the terminal strip are each double connections so that the wiring can be continued to the next inverter.

Procedure

1. Open the inverter as shown in the inverter's instructions.
2. Connect terminal A on inverter 1 to terminal A on inverter 2.
3. Connect the other inverters to each other in the same way.
4. Terminate the last inverter. In the inverter connect the free terminal A to terminal B using the supplied 330 Ω terminating resistor.
   Devices without a transformer: From unit generation VPI xx00 /2 the 330 Ω resistor is switched on using the DIP switch. When the unit is delivered the terminal resistor is switched on.
5. Close inverters.

Allocate communication address

- Recommendation: Continuous numbering starting with 1.
- Setting:
  Units without transformers: using the DIP switch inside the inverter.
  Units with transformers: using the inverter display.
- Procedure: Start according to the inverter's instructions



Note

A maximum of 32 inverters can be connected per RS485 bus.

111 Valenia

111.1 Valenia

Termination	Addressing	Interface
Yes	Yes	RS485

Select “Valenia“ during the device detection.

Supported models:

- Aurus:
  20, 30, 40, 42, 50, 52, 60, 62, 80, 82

Overview

- Integrated interface.
- Where to connect: Terminal strip on internal interface board.
- 3-pin wiring.
- Communication address must be allocated.
- Installation steps:
  - Switch off the inverters and Solar-Log™.
  - Connect inverters to the Solar-Log™.
  - Connect the inverters to each other.
  - Set the address of the inverters.

Connect inverters to the Solar-Log™

The wiring is done using a

- self-made 3 pin connection cable.

Procedure

1. Open the inverter as shown in the inverter's instructions.
2. If you are making the cable yourself, connect the wires as shown in the following diagram:

Solar-Log™ Base RS485 (A) / (B)	Inverter terminal strip
Terminal	PIN
► (A) 6 or (B) 10 (Data+)	► P
► (A) 8 or (B) 12 GND	► 0 V
► (A) 9 or (B) 13 (Data-)	► N

3. If no further inverter is connected, terminate the inverter according to the instructions for the inverter.
4. Set the address for the inverter on the inverter itself.
5. Close the inverter if no other inverters are to be connected.

Note

The inverter terminal strip's 5V output must not be connected to the Solar-Log™.

Connect the inverters to each other

The wiring is done using a

- self-made connection cable and terminal block connector.
- Where to connect: Terminal strip on internal interface board.

Procedure

1. Open the inverter as shown in the inverter's instructions.
2. Connect terminals P, N and 0V of the first inverter 1 to the corresponding terminals on the next inverter.
3. Connect the other inverters to each other in the same way.
4. Terminate the last inverter in accordance with the manufacturer's specifications.
5. Address the individual inverters in accordance with the manufacturer's manual.
6. Close the inverter if no other inverters are to be connected.
7. Insert the terminal block connector into the Solar-Log™ RS485 socket.



Note

A maximum of 32 inverters can be connected per RS485 bus.

112 Vectron

112.1 Vectron

Inverters manufactured by Bonfiglioli Vectron GmbH were listed under „Vectron“ up to firmware version 3.1.2. Starting with firmware version 3.1.3 the name has been changed to „Bonfiglioli“.

113 Vision

113.1 Vision Multitracker

Termination	Addressing	Interface
DIP switch	Yes	RS485

Select “Vision: VIS DM/TRIO“ during the device detection.

Supported models:

- VIS:
  3K-DM, 3.6K-DM, 4.2K-DM, 5K-DM, 10K, 12.5K, 15K, 17K, 20K, 25K, 30K, 36K, 50K, 56K, 60K, 72K

Overview

- Integrated interface.
- 3-pin wiring.
- 2 RJ45 sockets on the outside of the inverter.
- Communication address must be allocated.
- Installation steps:
  - Switch off the inverters and Solar-Log™.
  - Connect inverters to the Solar-Log™.
  - Connect the inverters to each other.
  - Allocate communication address.
    Address range 1 to 32.
    Settings on the inverter’s display according to the manufacturer’s manual.

Connect inverters to the Solar-Log™

The wiring is done using a

- self-made cable connection with RS485 data cable.



Caution

Risk of damage to the unit!
The Solar-Log™ also has an RJ45 socket, which must never be connected to the RJ45 socket on the inverter.

► Only connect inverters via the RS485/422 Solar-Log™ interface(s).

Procedure

1. If you are fabricating the cable yourself, connect the wires as shown in the following diagram.

Solar-Log™ Base RS485 (A) / (B)	RS485 inverter socket
Terminal	PIN
► (A) 6 or (B) 10 (Data+)	► Pin 1 (A) T/R+
► (A) 8 or (B) 12 GND	► Pin 5 GND
► (A) 9 or (B) 13 (Data-)	► Pin 2 (B) T/R-

2. Insert the RJ45 plug into the RJ45 socket on the inverter.
3. If no further inverter connected, terminate the inverter:
   Set the dip switch to “on.”

Connect the inverters to each other

- Connect using a network cable (patch cable) (No Crossover cable).
- Where to connect: RJ45 sockets on the outside of the inverter.

Procedure

1. Insert the RJ45 plug into the free RJ45 socket on the first inverter.
2. Insert the other end of the wire into any RJ45 socket on inverter 2.
3. Connect the other inverters to each other in the same way.
4. Terminate the last inverter, set the DIP switch to “on.”

Allocate communication address

- Recommendation: Continuous numbering from 1 to 32.
- Setting: Using the inverter display.
- Procedure: Start according to the inverter’s instructions.



Note

The following setting needs to be enable so that the PM parameters can be received.
SETUP ► REMOTE CNTRL ► ENABLE

113.2 Vision Singletracker

Termination	Addressing	Interface
DIP switch	Yes	RS485

Select “Vision: VIS-SM“ during the device detection.

Supported models:

- VIS:
  1.5K-SM, 2K-SM, 3K-SM, 3.6K-SM

Overview

- Integrated interface.
- 3-pin wiring.
- 2 RJ45 sockets on the outside of the inverter.
- Communication address must be allocated.
- Installation steps:
  - Switch off the inverters and Solar-Log™.
  - Connect inverters to the Solar-Log™.
  - Connect the inverters to each other.
  - Allocate communication address.
    Address range 1 to 254.
    Settings on the inverter’s display according to the manufacturer’s manual.

Connect inverters to the Solar-Log™

The wiring is done using a

- self-made cable connection with RS485 data cable.



Caution

Risk of damage to the unit!
The Solar-Log™ also has an RJ45 socket, which must never be connected to the RJ45 socket on the inverter.

► Only connect inverters via the RS485/422 Solar-Log™ interface(s).

Procedure

1. If you are fabricating the cable yourself, connect the wires as shown in the following diagram.

Solar-Log™ Base RS485 (A) / (B)	RS485 inverter socket
Terminal	PIN
► (A) 6 or (B) 10 (Data+)	► Pin 1 (A) T/R+
► (A) 8 or (B) 12 GND	► Pin 5 GND
► (A) 9 or (B) 13 (Data-)	► Pin 2 (B) T/R-

2. Insert the RJ45 plug into the RJ45 socket on the inverter.
3. If no further inverter connected, terminate the inverter:
   Set the dip switch to “on.”

Connect the inverters to each other

- Connect using a network cable (patch cable) (No Crossover cable).
- Where to connect: RJ45 sockets on the outside of the inverter.

Procedure

1. Insert the RJ45 plug into the free RJ45 socket on the first inverter.
2. Insert the other end of the wire into any RJ45 socket on inverter 2.
3. Connect the other inverters to each other in the same way.
4. Terminate the last inverter, set the DIP switch to “on.”

Allocate communication address

- Recommendation: Continuous numbering from 1 to 254
- Setting: Using the inverter display.
- Procedure: Start according to the inverter’s instructions.

114 WINAICO

114.1 WINAICO

Termination	Addressing	Interface
Switch	Yes	RS485

Select “WINAICO“ during the device detection.

Supported models:

- WSI-130wP, WSI-135wP

Overview

- Interface not integrated; Retrofit RS485 interface board.
- 4-pin wiring.
- Communication address must be allocated.
- Installation steps:
  - Allocate communication address.
  - Switch off the inverters and Solar-Log™.
  - Install the RS485 interface in the inverter.
  - Connect inverters to the Solar-Log™.
  - Connect the inverters to each other.

Allocate communication address

- Recommendation: Continuous numbering starting with 1.
- Setting: Using the DIP switch on the interface board.

Before installing the RS485 interface board:

► Allocate the communication address using the 8 interface board DIP switches:

Example - Communication address 1:



Example - Communication address 2:



Example - Communication address 3:



Example - Communication address 4:



Example - Communication address 5:



You will find more information at:
http://en.wikipedia.org/wiki/Binary_number

Installing the RS485 interface

Procedure

► Install the RS485 interface in the inverter in accordance with the interface board installation instructions.

Connect inverters to the Solar-Log™

The wiring is done using a

- self-made, shielded 4 wire data cable.

Procedure

1. Open the inverter as shown in the inverter's instructions.
2. Pull the free wires through the wire opening in the inverter.
3. If you are making the cable yourself, connect the wires as shown in the following diagram:

Solar-Log™ Base RS485 (A) / (B)	Inverter terminal strip
Terminal	Terminal
► (A) 6 or (B) 10 (Data+)	► R+
► (A) 6 or (B) 10 (Data+)	► R-
► (A) 9 or (B) 13 (Data-)	► T+
► (A) 9 or (B) 13 (Data-)	► T-

4. If no further inverter is connected, terminate the inverter according to the instructions for the inverter.
5. Close the inverter if no other inverters are to be connected.

Connect the inverters to each other

- Connect using a 4 wire, shielded data cable.
- Where to connect: Terminal strip inside the inverter on the retrofitted RS485 interface board.

Procedure

1. Open the inverter as shown in the inverter's instructions.
2. Connect terminals R+, T+, R- and R+ of inverter 1 to the corresponding terminals on inverter 2.
3. Connect the other inverters to each other in the same way.
4. Terminate the last inverter according to the inverter instructions.
5. Close inverters.

115 Würth

115.1 Würth SolarStar series

Termination	Addressing	Interface
No	Yes	RS485

Select “SolarMax“ during the device detection.

Supported Models:

- SolarStar a2000
- SolarStar a3000
- SolarStar a4200
- SolarStar a6000

Overview

- Integrated interface.
- Where to connect: RJ45 socket on the outside of the inverter.
- 6-pin wiring.
- Communication address must be allocated.
- Installation steps:
  - Switch off the inverters and Solar-Log™.
  - Connect inverters to the Solar-Log™.
  - Connect the inverters to each other.
  - Allocate communication address.

Connect inverters to the Solar-Log™

The wiring is done using a

- self-made RS485 data cable with RJ45 plug.



Caution

Risk of damage to the unit!
The Solar-Log™ also has an RJ45 socket, which must never be connected to the RJ45 socket on the inverter.

► Only connect inverters via the RS485/422 Solar-Log™ interface(s).

Procedure

1. If you are making the cable yourself, connect the wires as shown in the following diagram:

Solar-Log™ Base RS485 (A) / (B)	RJ45 inverter
Terminal	PIN
► (A) 6 or (B) 10 (Data+)	► 7
► (A) 7 or (B) 11	► 1
► (A) 7 or (B) 11	► 2
► (A) 8 or (B) 12 GND	► 3
► (A) 8 or (B) 12 GND	► 4
	5 - unused
	6 - unused
► (A) 9 or (B) 13 (Data-)	► 8

2. Insert the RJ45 plug into any RJ45 socket on the first inverter.

Connect the inverters to each other

- Connect using the RS485 data cable with an RJ45 plug.
- Where to connect: RJ45 socket on the outside of the inverter.

Procedure

1. Insert the RJ45 plug into the free RJ45 socket on the first inverter.
2. Insert the other end of the wire into any RJ45 socket on inverter 2.
3. Connect the other inverters to each other in the same way.

Allocate communication address

- Recommendation: Continuous numbering starting with 1.
- Setting: Using the inverter display.
- Procedure: Start according to the inverter‘s instructions.



Note

The inverter's factory setting is communication address 255.

► On the inverter display set the communication address manually to 1 even if only one inverter is connected to the Solar-Log™.



Note for feed-in management

The inverter itself has to be configured with MaxTalk2 (SolarMax's software) and set to "Remote mode" to be able to use reactive power management. Please refer to the inverter instructions for more information on this topic.

116 Yaskawa

116.1 Yaskawa

Termination	Addressing	Interface
Yes	Yes	RS485

Select “Yaskawa“ during the device detection.

Supported Models:

- CEPT:
  L1AA4P5, L1AA5P8, P1AA2010, P1AA29P9, P1AAB010, P1AAB9P9, P1ASB010, P1HD2100, P1HD4100, S1AA4P5, S1AA5P8

Overview

- Integrated interface.
- Where to connect: Terminal strip inside the inverter.
- Communication address must be allocated.
- 3-pin wiring.
- Installation steps:
  - Switch off the inverters and Solar-Log™.
  - Connect inverters to the Solar-Log™.
  - Address the inverter.
  - Connect the inverters to each other.
  - Terminate the inverter as shown in the inverter's instructions.

Connect inverters to the Solar-Log™

The wiring is done using a

- self-made cable connection.

Procedure

1. Open the inverter as shown in the inverter's instructions.
2. Pull the free wires through the wire opening in the inverter.
3. If you are making the cable yourself, connect the wires as shown in the following diagram:

Note

Please note that the connection label (e.g. 2-6) refers to the second row on the terminal block, connection 6).

Solar-Log™ Base RS485 (A) / (B)	RJ45 inverter
Terminal	PIN
► (A) 6 or (B) 10 (Data+)	► 2-6 D+
► (A) 8 or (B) 12 GND	► 1-8 GND
► (A) 9 or (B) 13 (Data-)	► 2-7 D-

4. If no further inverter is connected, terminate the inverter according to the instructions for the inverter.
5. Close the inverter cover if no other inverters are to be connected.

Connect the inverters to each other

The inverters are connected together using the RS485 interface. Refer to the manufacturer's inverter manual for the details on how to setup the connection.

Allocate communication address

- Recommendation: Continuous numbering starting with 1; highest possible address: 247.
- Setting: Using the inverter display.
- Procedure: Start according to the inverter's instructions.

Note

Please refer to the manufacturer's notes in regard to the addressing in the installation manual.

Note

A maximum of 31 inverters can be connected per RS485 bus.

117 Zentral Solar Deutschland ZSD

117.1 Zentral Solar Deutschland TLQ (RS485)

Termination	Addressing	Interface
Yes	No	RS485

Select “ZSD Solar: ZSD-Power“ during the device detection.

Supported Models:

- ZSD-Power 4.500 TLQ, ZSD-Power 5.000 TLQ, ZSD-Power 6.000 TLQ, ZSD-Power 17.000 TLQ, ZSD-Power 23.000 TLQ

Overview

- Integrated interface.
- Where to connect: RJ45 plug outside the housing floor.
- 2-pin wiring.
- Communication address does not have to be assigned.
- Installation steps:
  - Switch off the inverters and Solar-Log™.
  - Connect inverters to the Solar-Log™.
  - Connect the inverters to each other.

Connect inverters to the Solar-Log™

The wiring is done using a

- self-made cable connection with RS485 data cable.



Caution

Risk of damage to the unit!
The Solar-Log™ also has an RJ45 socket, which must never be connected to the RJ45 socket on the inverter.

► Only connect inverters via the RS485/422 Solar-Log™ interface(s).

Procedure

1. If you are making the cable yourself, connect the wires as shown in the following diagram:

Solar-Log™ Base RS485 (A) / (B)	RJ45 inverter
Terminal	PIN
► (A) 6 or (B) 10 (Data+)	► 7
► (A) 9 or (B) 13 (Data-)	► 8

2. Insert the RJ45 plug into the RJ45 socket on the inverter.
3. If no further inverter is connected, terminate the inverter according to the instructions for the inverter.

Connect the inverters to each other

- Connect using a network cable (patch cable).
- Where to connect: RJ45 sockets on the outside of the inverter.

Procedure

1. Insert the RJ45 plug into any RJ45 socket on inverter 1.
2. Insert the other end of the wire into any RJ45 socket on inverter 2.
3. Connect the other inverters to each other in the same way.
4. Terminate the last inverter in accordance with the inverter instructions.

117.2 Zentral Solar Deutschland ZSD - zentralpower

Termination	Addressing	Interface
-	Yes	RS485

Select “ZSD Solar: zentralpower“ during the device detection.

Supported Models:

- Zentralpower:
  2.5 S, 3.0 S, 3.6 S, 4.2 S, 5.0 S, 10.0 T, 12.0 T, 18.0 T, 20.0 T

Overview

- Integrated interface.
- Where to connect: RJ45 socket on the outside of the inverter.
- 2-pin wiring.
- The communication addresses (1-247) have to be assigned.
- Installation steps:
  - Switch off the inverters and Solar-Log™.
  - Connect inverters to the Solar-Log™.
  - Connect the inverters to each other.
  - Allocate communication address.

Connect inverters to the Solar-Log™

The wiring is done using a

- self-made, shielded 2 wire data cable with a RJ45 socket.

Procedure

1. If you are making the cable yourself, connect the wires as shown in the following diagram:

Solar-Log™ Base RS485 (A) / (B)	RJ 45 socket
Terminal	PIN
► (A) 6 or (B) 10 (Data+)	► 4 (+)
► (A) 9 or (B) 13 (Data-)	► 3 (-)

2. Insert the RJ45 plug into the RJ45 socket on the inverter.

Connect the inverters to each other

- Wiring using 2 pin cable with round plugs.
- Where to connect: Round sockets on the outside of the inverter.

Procedure

1. Insert the RJ45 plug into the RJ45 socket on the first inverter.
2. Insert the other end of the wire into any RJ45 socket on inverter 2.
3. Connect the other inverters to each other in the same way.

Allocate communication address

- Recommendation: Continuous numbering starting with 1.
  Address range: 1 - 247.
- Setting: Using the inverter display.
- Procedure: Start according to the inverter's instructions.

118 Zeversolar

118.1 Zeversolar

Termination	Addressing	Interface
Yes	No	RS422

Select “Zeversolar“ during the device detection.

Supported Models:

- Evershine TL3680, Evershine TL5000, Eversol TL1000, Eversol TL1500, Eversol TL2000, Eversol TL2100, Eversol TL3000, Eversol TL3200, Eversol TL3680, Eversol TL4600 VDE, Eversol TL5000, Eversol TL5400 VDE, Eversol TLC10K, Eversol TLC12K, Eversol TLC15K, Eversol TLC17K, Eversol TLC20K, Zeverlution 3680, Zeverlution 4000, Zeverlution 5000, Zeverlution 1000S, Zeverlution 1500S, Zeverlution 2000S, Zeverlution 3000S, Zeverlution Pro 33K

Overview

- Interface integrated.
- Where to connect: RJ45 socket on the outside of the inverter.
- 4-pin cable – only on RS422 interface.
- Communication address does not have to be assigned.

Note

The order in which the inverters are displayed in the Solar-Log™ after detection is random. We strongly recommend that you change the order of the inverters immediately after detection at startup, in the Configuration | Devices | Configuration | Order dialog box.
► The inverters can be identified using the displayed serial number.

- Installation steps:
  - Switch off the inverters and Solar-Log™.
  - Install the RS485 interface in the inverter.
  - Connect inverters to the Solar-Log™.
  - Connect the inverters to each other.

Connect inverters to the Solar-Log™

The wiring is done using a

- self-made cable connection with RS485 data cable.



Caution

Risk of damage to the unit!
The Solar-Log™ also has an RJ45 socket, which must never be connected to the RJ45 socket on the inverter.

► Only connect inverters via the RS422 interface.

Procedure

1. If you are making the cable yourself, connect the wires as shown in the following diagram:

Solar-Log™ Base RS422	RJ45 inverter
Terminal	PIN
► 6 (T/RX+)	► Pin 3
► 9 (T/RX-)	► Pin 6
► 10 (R/TX+)	► Pin 1
► 13 (R/TX-)	► Pin 2

2. Insert the RJ45 plug into any RJ45 socket on inverter 1.
3. If no further inverter is connected, terminate the inverter according to the instructions for the inverter.

Connect the inverters to each other

- Connect using a network cable (patch cable)
- Where to connect: RJ45 socket on the outside of the inverter

Procedure

1. Insert the RJ45 plug into any RJ45 socket on inverter 1.
2. Insert the other end of the wire into any RJ45 socket on inverter 2.
3. Connect the other inverters to each other in the same way.
4. Terminate the last inverter according to the inverter instructions.



Note

All Zeverlution S, Zeverlution 3680/4000/5000 and Evershine TLC inverter models can be supplied as an additional option with an already integrated monitoring solution (ComBox) from Zeversolar. If one of these models is purchased with an integrated solution, it is not possible to connect a third-party monitoring system. Therefore there is no compatibility to Solar-Log™.

119 Zucchetti Centro Sistemi S.p.a

119.1 Azzurro V2

Termination	Addressing	Interface
Yes	Yes	RS485

Select “Azzurro: V1/V2“ during the device detection.

Supported models (Wiring via RJ45):

- Azzurro 3PH 10 KTL-V2, 3PH 12 KTL-V2, 3PH 15 KTL-V2
- Azzurro 4.4KTL, 5.5KTL, 6.6KTL, 8.8KTL, 11KTL, 12KTL
- Azzurro 10000TL, 15000TL, 17000TL, 20000TL
- Azzurro 20000TL-G2, 25000TL-G2, 30000TL-G2, 33000TL-G2
- Azzurro 30000TL, 33000TL, 40000TL
- Azzurro 50000TL, 60000TL, 70000TL

Supported models (Wiring via RS485 pin block):

- Azzurro 1100TL, 1600TL, 2200TL, 2700TL, 3000TL
- Azzurro 3300TL-V3
- Azzurro 3000TLM, 3680TLM, 4000TLM, 4600TLM, 5000TLM, 6000TLM
- Azzurro 3KTLM, 3.6KTLM, 4KTLM, 4.6KTLM, 5KTLM, 6KTLM

Overview

- Integrated interface.
- Where to connect: RS485 pin block, inside the inverter.
- Where to connect: RJ45 socket inside the inverter.
- 2-pin wiring.
- The communication address has to be assigned.
- Installation steps:
  - Switch off the inverters and Solar-Log™.
  - Connect inverters to the Solar-Log™.
  - Connect the inverters to each other according to the inverter instructions.

Connect inverters to the Solar-Log™ (via RJ45)

The wiring is done using a

- self-made RS485 data cable with RJ45 plug.

Procedure

1. Open the inverter as shown in the inverter‘s instructions.
2. If you are making the cable yourself, connect the wires as shown in the following diagram:

Solar-Log™ Base RS485 (A) / (B)	RJ45 inverter
Terminal	Pin
► (A) 6 or (B) 10 (Data+)	► 2 RS485 A (+) (Orange)
► (A) 9 or (B) 13 (Data-)	► 1 RS485 B (-) (White and Orange)

3. In the inverter insert the RJ45 plug into the „RS-485 out“ socket.
4. If no further inverter is connected, terminate the inverter according to the instructions for the inverter.
5. Close the inverter if no other inverters are to be connected.

Connect the inverters to each other

- Wiring via data cable with RJ45 plug.
- Where to connect: RJ45 socket inside the inverter.

Connect inverters to the Solar-Log™ (via RS485 pin block)

The wiring is done using a

- self-made 2-pin cable connection.

Procedure

1. Open the inverter as shown in the inverter's instructions.
2. If you are making the cable yourself, connect the wires as shown in the following diagram:

Solar-Log™ Base RS485 (A) / (B)	RS485 inverter pin block
Terminal	Pin
► (A) 6 or (B) 10 (Data+)	► TX+
► (A) 9 or (B) 13 (Data-)	► TX-

3. If no further inverter is connected, terminate the inverter according to the instructions for the inverter.
4. Close the inverter if no other inverters are to be connected.

Connect the inverters to each other:

- Connect the inverters to each other according to the inverter instructions.

Allocate communication address

- Recommendation: Continuous numbering starting with 1.
  Adress range 1-32.
- Setting: Using the inverter display.
- Procedure: Start according to the inverter's instructions.



Note

A maximum of 32 inverters can be connected per RS485 bus.

119.2 Azzurro V3

Termination	Addressing	Interface
Yes	Yes	RS485

Select “Azzurro: V3“ during the device detection.

Supported models:

- 1PH 3000 TLM-V3, 1PH 3680 TLM-V3, 1PH 4000 TLM-V3, 1PH 4600 TLM-V3, 1PH 5000 TLM-V3, 1PH 6000 TLM-V3, 3PH 3.3KTL-V3, 3PH 4.4KTL-V3, 3PH 5.5KTL-V3, 3PH 6.6KTL-V3, 3PH 8.8KTL-V3, 3PH 11KTL-V3, 3PH 12KTL-V3, 3PH 25KTL-V3, 3PH 30KTL-V3, 3PH 33KTL-V3, 3PH 36KTL-V3, 3PH 40KTL-V3, 3PH 45KTL-V3, 3PH 50KTL-V3, 3PH 60KTL-V3, 3PH 80KTL-LV, 3PH 80KTL-V3, 3PH 100KTL-HV, 3PH 100KTL-LV, 3PH 110KTL-LV, 3PH 125KTL-HV, 3PH 136KTL-HV, 3PH 250KTL-HV, 3PH 250KTL-HV Z0, 3PH 255KTL-HV, 3PH 330KTL-HV Z0, 3PH 350KTL-HV Z0 3000TLM-V3, 3680TLM-V3, 4000TLM-V3, 4600TLM-V3, 5000TLM-V3, 6000TLM-V3 3PH 15000TL-V3, 3PH 17000TL-V3, 3PH 20000TL-V3, 3PH 22000TL-V3, 3PH 24000TL-V3, 3PH 100KTL-V4, 3PH 110KTL-V4

Overview

- Interface integrated.
- Where to connect: COM interface at the bottom of the device.
- 2-pin wiring.
- The communication address has to be assigned.
- Installation steps:
  - Switch off the inverters and Solar-Log™.
  - Connect inverters to the Solar-Log™.
  - Connect the inverters to each other according to the inverter instructions.

Connect inverters to the Solar-Log™

The wiring is done using a

- self-made, shielded 2 wire data cable.

Procedure

1. If you are making the cable yourself, connect the wires as shown in the following diagram:

Solar-Log™ Base RS485 (A) / (B)	COM interface
Terminal	Pin
► (A) 6 or (B) 10 (Data+)	► 2 RS485 A+
► (A) 9 or (B) 13 (Data-)	► 3 RS485 B-

2. If no further inverter is connected, terminate the inverter according to the instructions for the inverter.

Connect the inverters to each other:

- Wiring via 2-wire shielded data cable.
- Where to connect: COM interface at the bottom of the device.
- Procedure: According to the inverter instructions.

Allocate communication address

- Recommendation: Continuous numbering starting with 1.
  Adress range 1-31
- Setting: Using the inverter display.
- Procedure: Start according to the inverter's instructions.

Note!

The RS485 bus must not be longer than 1000 meters.

Note!

Please set the correct country code. See the manual of the inverter.

Very important!

For the connection of the devices of the respective manufacturer, please observe the manufacturer's documentation in the respective valid version.

120 Appendix

120.1 SMA mixed wiring

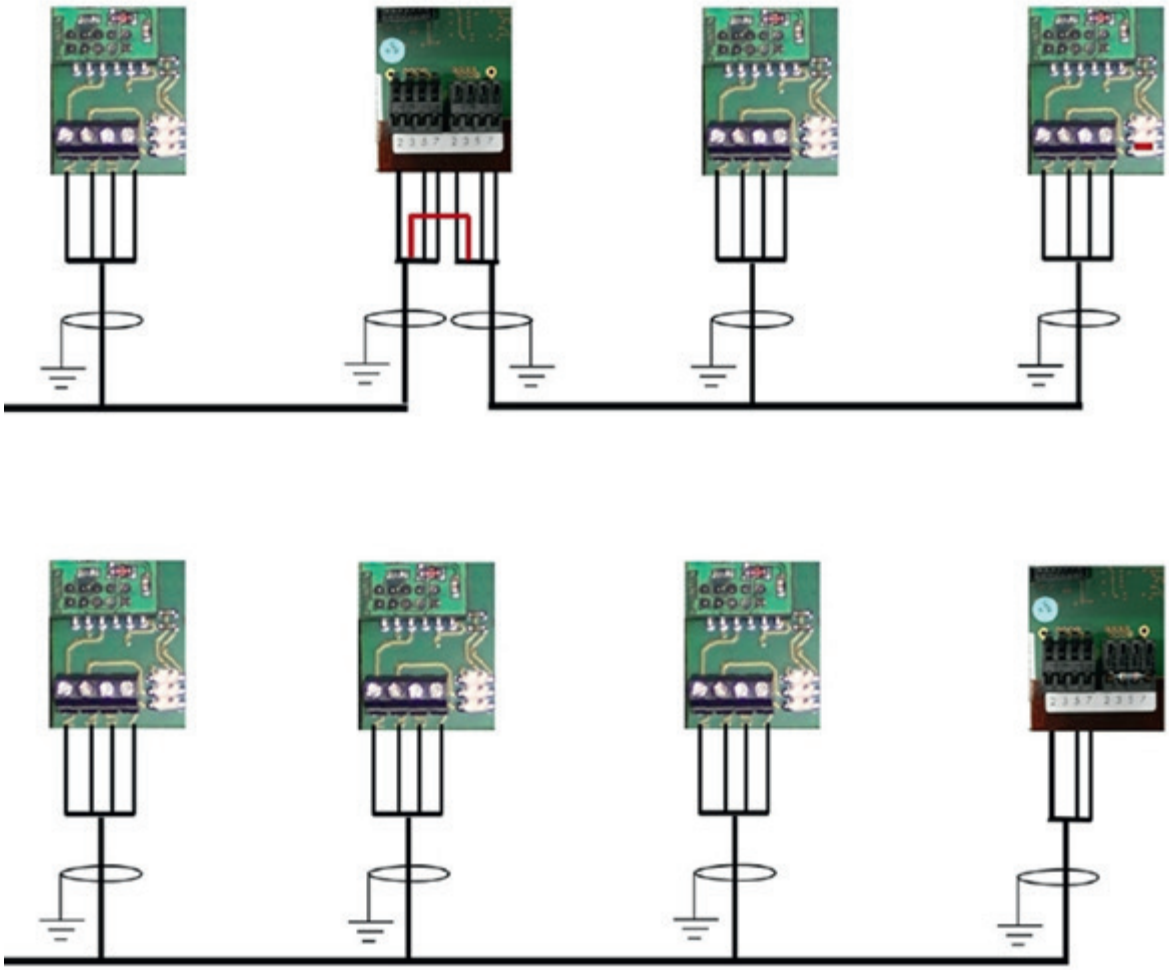

Fig.: SMA mixed wiring (Source: SMA)

120.2 Interconnection of Kaco Powador inverters

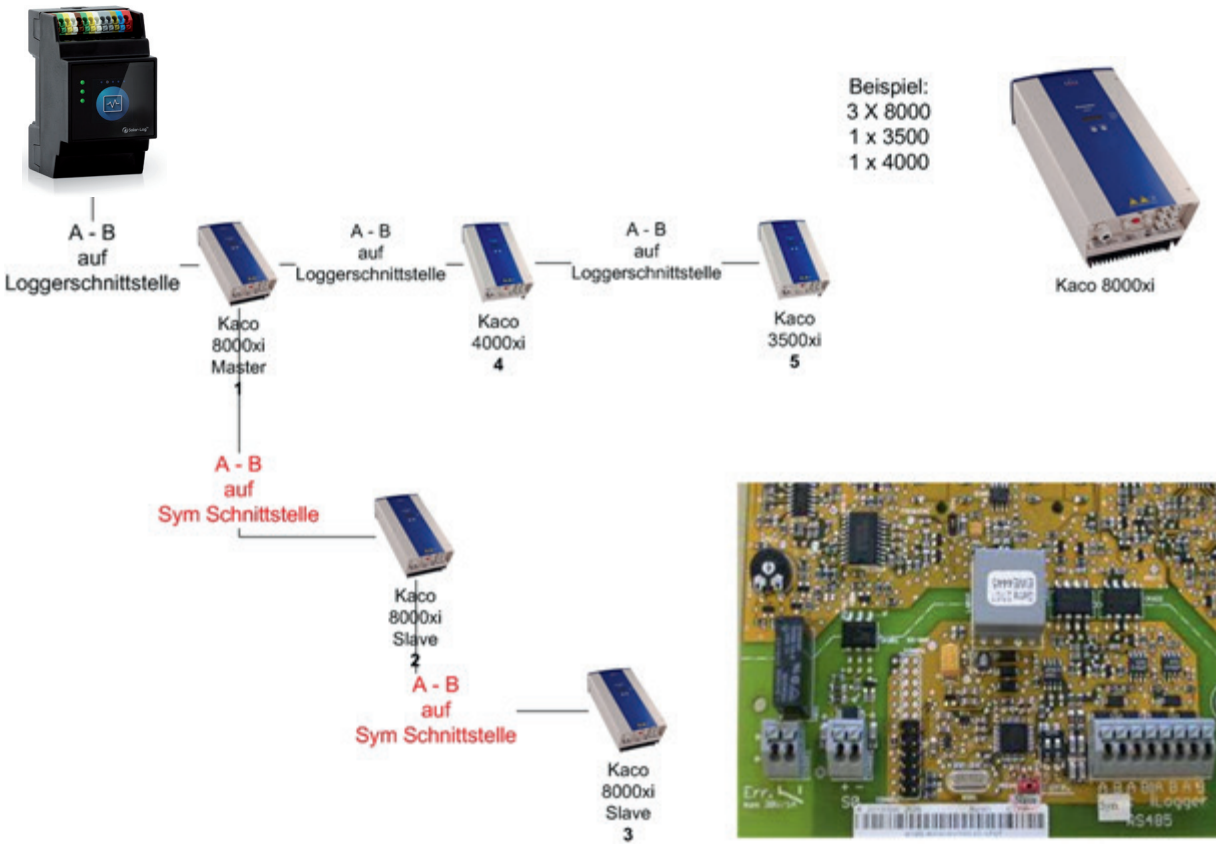

Fig.: Interconnection of Kaco Powador inverters (Source: Kaco)

Instructions for Powador 6400xi and 8000xi

- Interconnection of Powador 6400Xi and 8000xi:
  - ▶ Set 1 inverter as „Master“, 2 as „Slaves“;
    Read the labeling on the inverter circuit board!
  - ▶ Clamp the Solar-Log™ data cable to the „LOGGER“ terminal strip on the Master inverter.
  - ▶ Also connect the inverters to each other through the „SYM“ terminal strip
  - ▶ Connect any additional inverters through the „Logger“ terminal strip
  - ▶ On the inverter display:
    Set the communication addresses, numbering consecutively
  - ▶ On the inverter display: Switch „SYM Bus“ to active
- Powador 6400Xi and 8000xi stand-alone mode:
  - ▶ Set the inverter to „Slave“, irrespective of labeling on the circuit board
  - ▶ Clamp the Solar-Log™ data cable to the „SYM Bus“ terminal strip
  - ▶ On the inverter display: Switch „SYM Bus“ to inactive
  - ▶ On the inverter display: Set the communication addresses, numbering consecutively

02

Hybrid systems

1 ABB (FIMER S.p.A.) Microgrid (Hybrid system)

1.1 ABB (FIMER S.p.A.) Microgrid (Hybrid system)

Termination	Addressing	Interface
No	-*	Ethernet

Select the hybrid system „ABB“ during the device detection.

Supported models:

- MGS100

Overview

- Integrated interface.
- Connected using network cable (patch cable) and Ethernet router.
- The communication address cannot be assigned.
- Installation steps:
  - Switch off the inverter and Solar-Log™.
  - Connect the inverter to the network (RJ45).
  - Connect Solar-Log™ to the network (RJ45).

Connect the hybrid system to the Solar-Log™

The wiring is done using a

- network cable (patch cable) and the
- Ethernet router.

Note!*

The ABB Microgrid has the IP address 10.10.10.1 by default. This cannot be changed. Make sure that the Solar-Log™ has a IP address in the same range.

Adjusting the Solar-Log™ IP address:

The IP address of the Solar-Log™ has to be adjusted in order to communicate with the hybrid system. From the Solar-Log™ web menu, go to Configuration | Network | Ethernet to adjust the settings.

Detection via the Solar-Log™ WEB interface

- For detection on the Solar-Log™, select the device class under the menu Configuration | Device | Definition | Interface with the plus symbol and then select the device class (hybrid system) and after that ABB as the manufacturer. Confirm your selection with OK.
- Save your selections and then start the Device Detection under Configuration | Device | Detection.

Note

The Solar-Log™ Base only supports the operation of one connected battery / hybrid system.

2 FoxESS (Hybrid system)

2.1 FoxESS - H3 series (Hybrid system)

Termination	Addressing	Interface
-*	-**	RS485

Select the hybrid system „FoxESS“ during the device detection.

Supported models:

- H3-5.0-E, H3-6.0-E, H3-8.0-E, H3-10.0-E, H3-12.0-E

Overview

- Integrated interface.
- Where to connect: on the bottom of the inverter (see manufacturer‘s description).
- **Communication address (see manufacturer‘s manual).
- 2-pin wiring.
- Installation steps:
  - Switch off the inverter and Solar-Log™.
  - Connect inverter to the Solar-Log™.
  - **Communication address (see manufacturer‘s manual).

Connect the inverters to the Solar-Log™.

The wiring is done using a

- self-made shielded data cable.

Procedure according to the manufacturer’s instructions

1. Prepare access to the communication interface according to the instructions for the inverter.
2. Connect the wires for the cable connection as shown in the following diagram:

Solar-Log™ Base RS485 (A) / (B)	Terminal on the inverter
PIN	PIN
► (A) 6 or (B) 10 (Data+)	► 1 485A
► (A) 9 or (B) 13 (Data-)	► 2 485B

3. *Terminate the inverter according to the manufacturer‘s instructions.

**Assign communication address:

- Procedure: According to instructions from the manufacturer.

Note

The Solar-Log™ Base only supports the operation of one connected battery / hybrid system.

Very important!

Please observe the manufacturer's documentation in the respective valid version for the connection of the devices.

3 Fronius (Hybrid system)

3.1 Fronius Symo Hybrid system via Ethernet

Termination	Addressing	Interface
No	Yes	Ethernet

Select the hybrid system „Fronius: SunSpec Modbus/SolarAPI“ during the device detection.

Supported models:

- Symo Hybrid 3.0-3-S, Symo Hybrid 4.0-3-S, Symo Hybrid 5.0-3-S

Overview

- Integrated interface.
- The inverter‘s IP address has to be assigned.
- Connect using network cable (patch cable) and Ethernet router or switch.
- Installation steps:
  - The inverter has to be assigned a static IP address.
  - Switch off the inverter and Solar-Log™.
  - Connect the inverter to the network (RJ45).
  - Connect Solar-Log™ to the network (RJ45).

Connect the inverters to the Solar-Log™.

The wiring is done using a

- network cable (patch cable) and the
- Ethernet router or switch.

Assigning IP addresses

- A static IP address has to be assigned to the inverter via the display.
- Please select an IP address with the same class C subnet as the Solar-Log™.
  For example: The Solar-Log™ has the IP address 192.168.178.49.
  The inverter in this case has to have a free IP address in the same range (from 192.168.178.1 to 192.168.178.254).
- Procedure: Start according to the inverter‘s instructions.

Note

The "Data export via Modbus" settings in the Fronius Symo inverter have to be changed to "TCP" in order for the inverter detection to be successful.

► Follow the procedures according to the inverter manufacturer's manual.

Note

If the settings were switched to TCP, the automatically applied inverter settings should not be changes because otherwise communication with the Solar-Log™ will not work.

Note

To ensure that an inverter detection works with the Solar-Log™, the inverter number must be set to 1. This can be set on the inverter display under Settings / Datacom / WR number.
See the Fronius inverter manual for further cabling instructions.

Detection via the Solar-Log™ WEB Interface

- For detection on the Solar-Log™, select the device class under the menu Configuration | Device | Definition | Interface with the plus symbol and then select Fronius as the manufacturer. Confirm your selection with OK.
- Save your selections and then start the Device Detection under Configuration | Device | Detection.

Note

With the detection via Ethernet, it is also possible (as long they are installed) to register a connected battery and a connected consumption meter.

- ► An inverter is detected when it is without a connected battery and a hybrid system with a connected battery.
- ► If a Fronius consumption meter is connected to the hybrid system, an additional consumption meter (bi-direction meter) is detected and recorded when it is detected by the Solar-Log™ system.

Note

The Solar-Log™ Base only supports the operation of one connected battery / hybrid system.

3.2 Fronius Primo/Symo (GEN24) (Hybrid system)

Termination	Adressing	Interface
No	Yes	Ethernet
Yes	Yes	RS485 (Modbus)

Select the hybrid system „Fronius: Gen24“ during the device detection.

Supported models:

Fronius Primo Gen24

- 3.0 Plus, 3.6 Plus, 4.0 Plus, 4.6 Plus, 5.0 Plus, 6.0 Plus

Fronius Symo Gen24

- 3.0 Plus, 4.0 Plus, 5.0 Plus, 6.0 Plus, 8.0 Plus, 10.0 Plus

Overview - RS485 (Modbus)

- Integrated interface.
- Where to connect: Interface in the inverter.
- 3-pin wiring.
- Communication address must be assigned.
  - Setting: Via the web interface of the inverter.
  - Procedure: According to the inverter instructions.
- Installation steps:
  - Switch off the inverter and Solar-Log™.
  - Connect the inverter to the Solar-Log™.
  - Assign communication address.

Procedure - RS485 (Modbus)

1. Connect the wires for the cable connection as shown in the following diagram:

Solar-Log™ Base RS485	Modbus connection terminal
Terminal	Terminal
► (A) 6 or (B) 10 (Data+)	► M0 +
► (A) 9 or (B) 13 (Data-)	► M0 -
► (A) 8 or (B) 12 GND	► GND

2. Terminate the inverter according to the manufacturer‘s instructions.

Communication address assigned

- Setting: Via web interface of the inverter.
- Procedure: According to the inverter instructions.

Overview - Ethernet

- Integrated interface.
- IP address of the inverters can be assigned via DHCP as well as static/fixed.
- Wiring via network cable (patch cable) and Ethernet router or switch.
- Installation steps:
  - Assign IP address on the inverter statically/fixed or via DHCP.
  - Switch off the inverter and Solar-Log™.
  - Connect the inverter to the network (RJ45).
  - Connect Solar-Log™ to the network (RJ45).

Connect the inverter to the Solar-Log™

The wiring is done via

- Network cable (patch cable) and
- Ethernet router or switch.

Assign IP address

- An IP address can be assigned via DHCP as well as via static/fixed IP address via the web interface of the inverter (see inverter instructions).
- Please select an IP address from the same class C subnet of the Solar-Log™.
  Example: Solar-Log™ has 192.168.178.49.
  In this case, the inverters must have an IP address from the range 192.168.178.xxx (xxx stands for a number between 1 - 254).
- Procedure: According to the instructions for the inverter.

Detection via the Solar-Log™ WEB Interface

- For detection on the Solar-Log™, select the device class under the menu Configuration | Device | Definition | Interface with the plus symbol and then select Fronius as the manufacturer and Type GEN24. Confirm your selection with OK.
- Save your selections and then start the Device Detection under Configuration | Device | Detection.

Note

Always connect via LAN using the LAN 1 interface of the inverter, since the LAN 2 interface is reserved for communication between the inverters.

► The default IP address of the inverter is: 169.254.0.180

Note

To enable communication between the Solar-Log™ and the Fronius GEN24, the following sliders must be activated via the configuration interface of the inverter in the settings under „Modbus“:

- Slave as Modbus TCP
- Inverter control via Modbus

Additional settings:

- Modbus-Port 502
- SunSpec Model Type int + SF (float“ also possible if required)
- Meter address 200

Note

The Solar-Log™ Base only supports the operation of one connected battery / hybrid system.

3.3 Fronius VERTO/VERTO-Plus (Hybrid system)

Termination	Adressing	Interface
No	Yes	Ethernet
Yes	Yes	RS485 (Modbus)

Select the hybrid system „Fronius: Gen24“ during the device detection.

Supported models:

- VERTO:
  15.0, 17,5, 20.0, 25.0, 27.0, 30.0, 33.3
- VERTO-Plus:
  15.0, 17,5, 20.0, 25.0, 30.0, 33.3

Overview - RS485 (Modbus)

- Integrated interface.
- Where to connect: Interface in the inverter.
- 3-pin wiring.
- Communication address must be assigned.
  - Recommendation: Sequential numbering, starting with 1.
  - Setting: Via the web interface of the inverter.
  - Procedure: According to the inverter instructions.
- Installation steps:
  - Switch off the inverter and Solar-Log™.
  - Connect the inverter to the Solar-Log™.
  - Assign communication address.

Procedure - RS485 (Modbus)

1. Connect the wires for the cable connection as shown in the following diagram:

Solar-Log™ Base RS485	Modbus connection terminal
Terminal	Terminal
► (A) 6 or (B) 10 (Data+)	► M0 +
► (A) 9 or (B) 13 (Data-)	► M0 -
► (A) 8 or (B) 12 GND	► GND

2. Terminate the inverter according to the manufacturer‘s instructions.

Communication address assigned

- Setting: Via web interface of the inverter.
- Procedure: According to the inverter instructions.

Overview - Ethernet

- Integrated interface.
- IP address of the inverters can be assigned via DHCP as well as static/fixed.
- Wiring via network cable (patch cable) and Ethernet router or switch.
- Installation steps:
  - Assign IP address on the inverter statically/fixed or via DHCP.
  - Switch off the inverter and Solar-Log™.
  - Connect the inverter to the network (RJ45).
  - Connect Solar-Log™ to the network (RJ45).

Connect the inverter to the Solar-Log™

The wiring is done via

- Network cable (patch cable) and
- Ethernet router or switch.

Assign IP address

- An IP address can be assigned via DHCP as well as via static/fixed IP address via the web interface of the inverter (see inverter instructions).
- Please select an IP address from the same class C subnet of the Solar-Log™.
  Example: Solar-Log™ has 192.168.178.49.
  In this case, the inverters must have an IP address from the range 192.168.178.xxx (xxx stands for a number between 1 - 254).
- Procedure: According to the instructions for the inverter.

Detection via the Solar-Log™ WEB Interface

- For detection on the Solar-Log™, select the device class under the menu Configuration | Device | Definition | Interface with the plus symbol and then select Fronius as the manufacturer and Type GEN24. Confirm your selection with OK.
- Save your selections and then start the Device Detection under Configuration | Device | Detection.

Note

Always connect via LAN using the LAN 1 interface of the inverter, since the LAN 2 interface is reserved for communication between the inverters.

► The default IP address of the inverter is: 169.254.0.180

Note

The initial commissioning of the inverter requires some settings that can be made either via the browser or via the Fronius Solar.start app (available via the App Store or Google Play)

Default IP address via browser:

► The standard IP address of the inverter via Ethernet is: 169.254.0.180

Note for communication via TCP

To enable communication and control between the Solar-Log™ and the Fronius VERTO Plus, the setting “Modbus Server via TCP” must be activated in the inverter configuration.
The following settings are then available:

- Modbus port:
  Enter port 502 here and the inverter must be activated as a slave.
- SunSpec Model Type int + SF (if required, “float” is also possible)
- Meter address:
  The identification number assigned to the meter (Unit ID) must be entered here, which can be found on the user interface of the inverter in the Communication - Modbus menu. Default setting: 200
- Allow control:
  Activate this option to enable control of the inverter via Modbus.

Note for communication via RTU

To enable communication between the Solar-Log™ and the Fronius VERTO Plus, the following settings must be made via the configuration interface of the inverter under “Modbus Server”:
Modbus RTU interface 0:

- Baud rate:
  Make sure that this is the same on the send and receive side.
- Parity: None
- SunSpec Model Type: int + SF (if required, “float” is also possible)
- Meter address:
  The identification number assigned to the meter (Unit ID) must be entered here, which can be found on the user interface of the inverter in the Communication - Modbus menu. Default setting: 200
- Inverter address:
  The identification number (Unit ID) assigned to the inverter must be entered here, which can be found on the user interface of the inverter in the Communication - Modbus menu.
  Default setting: 1

Very important!

For the connection of the devices of the respective manufacturer, please observe the manufacturer‘s documentation in the respective valid version.

4 GoodWe (Hybrid system)

4.1 GoodWe (RS485) (Hybrid system)

Termination	Addressing	Interface
-*	-**	RS485

Select the hybrid system „GoodWe“ during the device detection.

Supported models:

- GW5K-ET, GW5KN-ET, GW6.5K-ET, GW6.5KN-ET, GW8K-ET, GW8KN-ET, GW10K-ET, GW10KN-ET, GW15K-ET, GW20K-ET, GW25K-ET, GW29.9K-ET

Overview

- Integrated interface.
- Where to connect: Connection on the bottom of the inverter (see manufacturer‘s description).
- **Communication address (see manufacturer‘s manual).
- 2-pin wiring.
- Installation steps:
  - Switch off the inverters and Solar-Log™.
  - Connect inverters to the Solar-Log™.
  - **Communication address (see manufacturer‘s manual).

Connect the inverters to the Solar-Log™.

The wiring is done using a

- self-made, shielded 2-wire data cable.

Procedure according to the manufacturer’s instructions

1. Prepare access to the communication interface according to the instructions for the inverter.
2. Connect the wires for the cable connection as shown in the following diagram:

Solar-Log™ Base RS485 (A) / (B)	Terminal block
PIN	PIN (EMS)
► (A) 6 or (B) 10 (Data+)	► 1 485_A (+)
► (A) 9 or (B) 13 (Data-)	► 2 485_B (-)

3. *Terminate the inverter according to the manufacturer‘s instructions.

**Assign communication address:

- Procedure: According to instructions from the manufacturer.



Note

The Solar-Log™ Base only supports the operation of one connected battery / hybrid system.

Very important!

For the connection of the devices of the respective manufacturer, please observe the manufacturer's documentation in the respective valid version.

4.2 GoodWe (LAN) (Hybrid system)

Termination	Addressing	Interface
No	-*	Ethernet

Select the hybrid system „GoodWe“ during the device detection.

Supported models:

- GW5K-ET, GW5KN-ET, GW6.5K-ET, GW6.5KN-ET, GW8K-ET, GW8KN-ET, GW10K-ET, GW10KN-ET, GW15K-ET, GW20K-ET, GW25K-ET, GW29.9K-ET, GW30K-ET

Overview

- Interface optional via a communication module.
- Where to connect: Connection on the bottom of the inverter (see manufacturer‘s description).
- Connected using network cable and Ethernet router or switch
- *Communication address: See manufacturer‘s instructions for allocation.
- Installation steps:
  - Switch off the inverter and Solar-Log™.
  - Connect the inverter to the network (RJ45).
  - Connect Solar-Log™ to the network (RJ45).

Connect the inverters to the Solar-Log™.

The wiring is carried out using

- network cable CAT6 or even better CAT7.
- Ethernet router or switch.

Assign IP address

- *IP addressing, see manufacturer‘s instructions.
- Both devices must be in the same class C subnet.
  Here is an example: Solar-Log™ has 192.168.178.49
  In this case, the inverters must have an IP address from the range 192.168.178.xxx (xxx stands for a number between 1 - 254).
- Procedure: Start according to the inverter‘s instructions.

Detection via the Solar-Log™ WEB interface

- For detection on the Solar-Log™, select the device class under the menu Configuration | Device | Definition | Interface with the plus symbol and then select GoodWe as the manufacturer and Hybrid as the type. Confirm your selection with OK.
- Save your selections and then start the Device Detection under Configuration | Device | Detection and start the device detection.

Note

The Solar-Log™ Base only supports the operation of one connected battery / hybrid system.

Very important!

If you have any questions in connection with the communication module and the configuration and settings, please contact GoodWE support.

Very important!

For the connection of the devices of the respective manufacturer, please observe the manufacturer's documentation in the respective valid version.

5 Huawei (Hybrid system)

5.1 Huawei (Hybrid system)

Termination	Addressing	Interface
-*	-**	RS485

Select the hybrid system „Huawei“ during the device detection.

Supported models:

- SUN2000-2KTL-L1, SUN2000-3KTL-L1, SUN2000-3.68KTL-L1, SUN2000-4KTL-L1, SUN2000-4.6KTL-L1, SUN2000-5KTL-L1, SUN2000-6KTL-L1

Overview

- Integrated interface.
- Where to connect: COM port on the bottom of the inverter (see manufacturer‘s description).
- **Communication address (see manufacturer‘s manual).
- 2-pin wiring.
- Installation steps:
  - Switch off the inverters and Solar-Log™.
  - Connect inverters to the Solar-Log™.
  - **Communication address (see manufacturer‘s manual).

Connect the inverters to the Solar-Log™.

The wiring is done using a

- self-made shielded, data cable with COM connector.

Procedure according to the manufacturer’s instructions

1. Prepare access to the communication interface according to the instructions for the inverter.
2. Connect the wires for the cable connection as shown in the following diagram:

Solar-Log™ Base RS485 (A) / (B)	Inverter COM port
Terminal	PIN
► (A) 6 or (B) 10 (Data+)	► 485A1
► (A) 9 or (B) 13 (Data-)	► 485B1

3. *Terminate the inverter according to the manufacturer’s instructions.

**Assign communication address:

- Procedure: According to instructions from the manufacturer.

Very important!

The WLAN dongle must not be installed, otherwise no communication with the Solar-Log™ Base is possible.

Note

The Solar-Log™ Base only supports the operation of one connected battery / hybrid system.

Very important!

For the connection of the devices of the respective manufacturer, please observe the manufacturer's documentation in the respective valid version.

6 Kostal (Hybrid system)

6.1 Kostal Plenticore plus (Hybrid system)

Termination	Addressing	Interface
No	Yes	Ethernet
Yes	Yes	RS485 (Modbus)

Select the hybrid system „Kostal: Modbus“ during the device detection.

Supported models:

- PLENTICORE plus 4.2, PLENTICORE plus 5.5, PLENTICORE plus 7.0, PLENTICORE plus 8.5, PLENTICORE plus 10.0

Overview - RS485 (Modbus)

- Integrated interface.
- Where to connect: Interface in the inverter.
- 3-pin wiring.
- Communication address must be assigned.
  - Setting: Via the web interface of the inverter or the display of the inverter.
  - Procedure: According to the inverter instructions.
- Installation steps:
  - Switch off the inverter and Solar-Log™.
  - Connect the inverter to the Solar-Log™.
  - Assign communication address.

Procedure - RS485 (Modbus)

1. Connect the wires for the cable connection as shown in the following diagram:

Solar-Log™ Base RS485	Modbus connection terminal
Terminal	Terminal
► (A) 6 or (B) 10 (Data+)	► RS485 A
► (A) 9 or (B) 13 (Data-)	► RS485 B
► (A) 8 or (B) 12 GND	► GND

2. Terminate the inverter according to the manufacturer‘s instructions.

Overview - Ethernet

- Integrated interface.
- Connected using network cable (patch cable) and Ethernet router or switch
- Communication address must be allocated
- Installation steps
  - Assign a static IP address
  - Switch off the inverter and Solar-Log™.
  - Connect the inverter to the network (RJ45).
  - Connect Solar-Log™ to the network (RJ45).

Connect inverters to the Solar-Log™

The wiring is done using a

- network cable (patch cable) and the
- Ethernet router or switch.

Assigning IP addresses

- A static IP address has to be assigned to the inverter via the display.
- Please select an IP address with the same class C subnet as the Solar-Log™.
  For example: The Solar-Log™ has the IP address 192.168.178.49.
  The inverter in this case has to have a free IP address in the same range (from 192.168.178.1 to 192.168.178.254).
- Procedure: Start according to the inverter's instructions.

Detection via the Solar-Log™ WEB interface

- For detection on the Solar-Log™, select the device class under the menu Configuration | Device | Definition | Interface with the plus symbol and then select Kostal as the manufacturer and Modbus as the type. Confirm your selection with OK.
- Save your selections and then start the Device Detection under Configuration | Device | Detection and start the device detection.

Note!

„Modbus TCP" has to be activated to be able to communicate with the Solar-Log™.
This is done from the inverter's web menu.
Enter the IP address of the inverter into your internet browser and then go to the menu Settings / Information > CommuniCation > sunspec / Modbus > and check the box for Modbus TCP.

► Please follow the manufacturer's instructions for the inverter.

Note!

During detection, it is also possible to detect a connected battery (if installed).

► Without a connected battery, the Kostal Plenticore plus is detected as an inverter; with a connected battery, it is detected as a hybrid system with the associated 2-direction meter.

In order for the battery to be detected, the battery must be activated using a 10-digit activation code. This activation can be done either via the display of the inverter or via the web interface of the inverter.

► Please follow the manufacturer's instructions for the inverter.

Note

The Solar-Log™ Base only supports the operation of one connected battery / hybrid system.

Very important!

For the connection of the devices of the respective manufacturer, please observe the manufacturer's documentation in the respective valid version.

6.2 Kostal Plenticore G3 (Hybrid system)

Termination	Addressing	Interface
No	Yes	Ethernet
Yes	Yes	RS485 (Modbus)

Select the hybrid system „Kostal: Modbus“ during the device detection.

Supported models:

- PLENTICORE:
  G3 S 4.0, G3 S 5.5, G3 S 7.0, G3 M 8.5, G3 M 10, G3 M 12.5, G3 L 15, G3 L 17.5, G3 L 20

Overview - RS485 (Modbus)

- Integrated interface.
- Where to connect: Interface in the inverter.
- 3-pin wiring.
- Communication address must be assigned.
  - Setting: Via the web interface of the inverter or the display of the inverter.
  - Procedure: According to the inverter instructions.
- Installation steps:
  - Switch off the inverter and Solar-Log™.
  - Connect the inverter to the Solar-Log™.
  - Connect the inverters to each other.
  - Assign communication address.

Procedure - RS485 (Modbus)

1. Connect the wires for the cable connection as shown in the following diagram:

Solar-Log™ Base RS485	Modbus connection terminal
Terminal	Terminal
► (A) 6 or (B) 10 (Data+)	► RS485 A
► (A) 9 or (B) 13 (Data-)	► RS485 B
► (A) 8 or (B) 12 GND	► GND

2. Terminate the inverter according to the manufacturer‘s instructions.

Overview - Ethernet

- Integrated interface.
- Connected using network cable (patch cable) and Ethernet router or switch
- Communication address must be allocated
- Installation steps
  - Assign a static IP address
  - Switch off the inverters and Solar-Log™
  - Connect inverters to the Solar-Log™ (RJ45)
  - Connect the inverters to each other (RJ45).

Connect inverters to the Solar-Log™

The wiring is done using a

- network cable (patch cable) and the
- Ethernet router or switch.

Assigning IP addresses

- A static IP address has to be assigned to the inverter via the display.
- Please select an IP address with the same class C subnet as the Solar-Log™.
  For example: The Solar-Log™ has the IP address 192.168.178.49.
  The inverter in this case has to have a free IP address in the same range (from 192.168.178.1 to 192.168.178.254).
- Procedure: Start according to the inverter's instructions.

Detection via the Solar-Log™ WEB interface

- For detection on the Solar-Log™, select the device class under the menu Configuration | Device | Definition | Interface with the plus symbol and then select Kostal as the manufacturer and Modbus as the type. Confirm your selection with OK.
- Save your selections and then start the Device Detection under Configuration | Device | Detection and start the device detection.

Note!

To be able to communicate with the Solar-Log™, "Modbus TCP" must first be activated.
To do this, go to the inverter display and then to the Modbus/Sunspec (TCP) menu item, select the "Modbus Sunspec protocol" item and press Enter to save.

► Please follow the manufacturer's instructions for the inverter.

Note!

During detection, it is also possible (if installed) to detect a connected battery.

► Without a connected battery, the Kostal Plenticore G3 is detected as an inverter; with a connected battery, it is detected as a hybrid system with the associated 2-direction meter.

In order for the battery to be detected, the "Battery function" product extension must be activated in the inverter using an activation code.

► Please follow the manufacturer's instructions for the inverter.

Note

The Solar-Log™ Base only supports the operation of one connected battery / hybrid system.

Very important!

For the connection of the devices of the respective manufacturer, please observe the manufacturer's documentation in the respective valid version.

7 Kyocera (Hybrid system)

7.1 Kyocera Inverter/Battery System (Hybrid system)

Termination	Addressing	Interface
No	Yes	RS485

Select the hybrid system „Kyocera“ during the device detection.

Supported models:

- KD260AH-4PG

Overview

- Integrated interface.
- Where to connect: Terminal strip under the cover on the bottom.
- The communication address has to be assigned.
- 2-pin wiring.
- Installation steps:
  - Switch off the inverters and Solar-Log™.
  - Connect inverters to the Solar-Log™.
  - Assign the communication address according to the manufacturer‘s manual.

Connect the inverters to the Solar-Log™.

The wiring is done using a

- self-made, shielded 2-wire data cable.

Procedure

1. Unscrew the side cover as shown in the inverter‘s instructions.
2. Connect the wires for the cable connection as shown in the following diagram:

Solar-Log™ Base RS485 (A) / (B)	Inverter terminal strip
Terminal	PIN
► (A) 6 or (B) 10 (Data+)	► 3 Data+
► (A) 9 or (B) 13 (Data-)	► 4 Data-

3. Screw the inverter cover on again.

Allocate communication address:

- Procedure: According to the manufacturer‘s manual.

Note

The Solar-Log™ Base only supports the operation of one connected battery / hybrid system.

8 Phonosolar (Hybrid system)

8.1 PhonoCube (Hybrid system)

Termination	Addressing	Interface
No	Yes	RS485

Select the hybrid system „PhonoSolar“ during the device detection.

Supported models:

- PhonoCube 7.2

Overview

- Integrated interface.
- Where to connect: Terminal strip under the cover on the backside.
- The communication address has to be assigned.
- 2-pin wiring.
- Installation steps:
  - Switch off the PhonoCube and Solar-Log™.
  - Connect the PhonoCube to the Solar-Log™.
  - Allocate communication address.
    Address range 1 - 247.
    Settings according to the manual.

Connect the PhonoCube to the Solar-Log™

The wiring is done using a

- self-made, shielded 2-wire data cable.

Procedure

1. Unscrew the cover according to the PhoneCube instructions.
2. Connect the wires for the cable connection as shown in the following diagram:

Solar-Log™ Base RS485 (A) / (B)	PhonoCube Terminal Strip
Terminal	PIN
► (A) 6 or (B) 10 (Data+)	► 1 - Data+
► (A) 9 or (B) 13 (Data-)	► 2 - Data-

3. Screw the PhonoCube cover on again.

Note

When detecting a PhonoCubes, two devices are always detected. The first device consists of the inverter and the battery value. The second device consists of the consumption meter that is integrated into the PhonoCube.

Note

The Solar-Log™ Base only supports the operation of one connected battery / hybrid system.

9 QCells (Hybrid system)

9.1 Q-Home + ESS-G1 (Hybrid system)

Termination	Addressing	Interface
No	-*	Ethernet

Select the hybrid system „QCells“ during the device detection.

Supported models:

- ESS-G1 8.0

Overview

- Integrated interface.
- Connected using network cable (patch cable) and Ethernet router.
- The communication address cannot be assigned (only via DHCP).*
- Installation steps:
  - Switch off the inverter and Solar-Log™.
  - Connect the inverter to the network (RJ45).
  - Connect Solar-Log™ to the network (RJ45).

Connect the hybrid system to the Solar-Log™

The wiring is done using a

- network cable (patch cable) and the
- Ethernet router.

*Dynamic IP address (DHCP) for detection and communication:

Both the Solar-Log™ and QCells devices have to be set to obtain their IP addresses automatically (DHCP) and be in the same class C subnet.



Note!

Make sure that the DHCP server is set to always assign the same IP address to the QCells device. (Refer to the router‘s manual)



Note!

All of the steps in the QCells quick start guide need to be successfully carried out in order to establish communication between the Solar-Log™ and QCells device.

Detection via the Solar-Log™ WEB interface

- For detection on the Solar-Log™, select the device class under the menu Configuration | Device | Definition | Interface with the plus symbol and then select the device class (hybrid system) and after that QCells as the manufacturer. Confirm your selection with OK.
- Save your selections and then start the Device Detection under Configuration | Device | Detection.

Note

The Solar-Log™ Base only supports the operation of one connected battery / hybrid system.

10 RCT Power Storage DC (Hybrid system)

10.1 RCT Power Storage DC (Hybrid system)

Termination	Addressing	Interface
Yes	Yes	RS485

Select the hybrid system „RCT Power“ during the device detection.

Supported models:

- Power Storage DC 4.0, Power Storage DC 5.0, Power Storage DC 6.0, Power Storage DC 8.0, Power Storage DC 10.0

Overview

- Integrated interface.
- Where to connect: Terminal strip X102 inside the device.
- 2-pin wiring.
- The communication address has to be assigned.
- Installation steps:
  - Switch off the device and the Solar-Log™.
  - Connect the device to the Solar-Log™.
  - Assign the communication address according to the manufacturer‘s instructions.
  - Terminate device.

Connect the device to the Solar-Log™

The wiring is done using a:

- self-made, shielded 2-wire data cable.

Note

The RCT PowerApp has to be downloaded from the PlayStore in order to adjust the device address. Wire connections according to the app instructions.

Procedure:

1. Open the device according to the device instructions.
2. Connect the wires for the cable connection as shown in the following diagram:

Solar-Log™ Base RS485 (A) / (B)	Terminal strip X102
Terminal	Pin
► (A) 6 or (B) 10 (Data+)	► +
► (A) 9 or (B) 13 (Data-)	► -

3. Terminate the inverter according to the manufacturer‘s instructions.
4. Close the device if no other device are to be connected.

Note!

The Solar-Log™ Base only supports the operation of one connected battery / hybrid system.

Note!

The visualisation of the pac in the Solar-Log™ differs from the one in the RCT Power App, if the hybridsystem is charging or discharging. In the RCT Power system the charge and the discharge of the battery are included in the pac and on the Solar-Log™ this value is not influenced by the battery.

Note on the inverter:

Please note that the latest software version (min. 4733) is installed on the RCT Power device and the RS485 working mode is set to „Modbus Slave“ in the APP. (default setting)

To do this, please proceed as follows:

Start „RCT Power App“ and continue:
Click on „ “ ► Log in, password „Installer“ ► Device ► Settings ► Interfaces ► RS485.

Select the option „Modbus Slave“ under „RS485 working mode“ and enter the communication address of the inverter under „RS485 address“. After completing the setting, press „Flash“.

11 SofarSolar (Hybrid system)

11.1 SofarSolar (Hybrid system)

Termination	Addressing	Interface
Yes	Yes	RS485

Select the hybrid system „Sofarsolar: G3“ during the device detection.

Supported models:

- ESI 3K-S1, ESI 3.68K-S1, ESI 4K-S1, ESI 4.6K-S1, ESI 5K-S1, ESI 5K-S1-A, ESI 6K-S1
- HYD 3000-EP, HYD 3680-EP, HYD 4000-EP, HYD 4600-EP, HYD 5000-EP, HYD 5500-EP, HYD 6000-EP
- HYD 3000-ES, HYD 3600-ES, HYD 4000-ES, HYD 4600-ES, HYD 5000-ES, HYD 6000-ES
- HYD 5KTL-3PH, HYD 6KTL-3PH, HYD 8KTL-3PH, HYD 10KTL-3PH, HYD 15KTL-3PH, HYD 20KTL-3PH

Overview

- Interface integrated.
- Where to connect: COM interface at the bottom of the device.
- 2-pin wiring.
- The communication address has to be assigned.
- Installation steps:
  - Switch off the device and the Solar-Log™.
  - Connect the device to the Solar-Log™.
  - Assign the communication address.

Connect the device to the Solar-Log™

The wiring is done using a:

- self-made, shielded 2-wire data cable.

Procedure for the models:

- ESI 3K-S1, ESI 3.68K-S1, ESI 4K-S1, ESI 4.6K-S1, ESI 5K-S1, ESI 5K-S1-A, ESI 6K-S1
- HYD 5KTL-3PH, HYD 6KTL-3PH, HYD 8KTL-3PH, HYD 10KTL-3PH, HYD 15KTL-3PH, HYD 20KTL-3PH

1. Connect the wires for the cable connection as shown in the following diagram:

Solar-Log™ Base RS485 (A) / (B)	COM-Schnittstelle
Terminal	Pin
► (A) 6 oder (B) 10 (Data+)	► 1 RS485 A1-1 (A) or 2 RS485 A1-2 (A)
► (A) 9 oder (B) 13 (Data-)	► 3 RS485 B1-1 (B) or 4 RS485 B1-2 (B)

2. Terminate the inverter according to the manufacturer's instructions.

Assign the communication address

- Address range: 1 to 31.
- Procedure: According to the instructions for the inverter (via the LCD display of the inverter).

Procedure for the models:

- HYD 3000-ES, HYD 3600-ES, HYD 4000-ES, HYD 4600-ES, HYD 5000-ES, HYD 6000-ES

1. Connect the wires for the cable connection as shown in the following diagram:

Solar-Log™ Base RS485 (A) / (B)	COM-Schnittstelle
Terminal	Pin
► (A) 6 oder (B) 10 (Data+)	► 3 485A
► (A) 9 oder (B) 13 (Data-)	► 4 485B

2. Terminate the inverter according to the manufacturer's instructions.

Procedure for the models:

- HYD 3000-EP, HYD 3680-EP, HYD 4000-EP, HYD 4600-EP, HYD 5000-EP, HYD 6000-EP

1. Connect the wires for the cable connection as shown in the following diagram:

Solar-Log™ Base RS485 (A) / (B)	COM-Schnittstelle
Terminal	Pin
► (A) 6 oder (B) 10 (Data+)	► 5 485-1TX+
► (A) 9 oder (B) 13 (Data-)	► 6 485-1TX-

2. Terminate the inverter according to the manufacturer's instructions.

Note!

The Solar-Log™ Base only supports the operation of one connected battery / hybrid system.

Note!

The RS485 bus must not be longer than 1000 meters.

Note!

Please set the correct country code. See the manual of the inverter.

Very important!

For the connection of the devices of the respective manufacturer, please observe the manufacturer's documentation in the respective valid version.

12 SolarEdge - StoreEdge (Hybrid system)

12.1 SolarEdge - StoreEdge (Hybrid system)

Termination	Adressing	Interface
No	Yes	Ethernet

Select the hybrid system „SolarEdge“ during the device detection.

Supported models:

- SE2200H-RWS, SE3000H-RWS, SE3680H-RWS, SE4000H-RWS, SE5000H-RWS, SE5K-RWS, SE7K-RWS, SE8K-RWS, SE10K-RWS

Overview

- Integrated interface.
- IP address of the inverter must be assigned statically/fixed.
- Wiring via network cable (patch cable) and Ethernet router or switch.
- Installation steps:
  - IP address assigned statically/fixed at the inverter.
  - Switch off the inverter and Solar-Log™.
  - Connect the inverter to the network (RJ45).
  - Connect Solar-Log™ to the network (RJ45).

Connect the inverter to the Solar-Log™

The wiring is done via

- Network cable (patch cable) and
- Ethernet router or switch.

Assign IP address

- The IP address must be assigned statically/fixed (see inverter manual).
- Please select an IP address from the same class C subnet of the Solar-Log™.
  Example: Solar-Log™ has 192.168.178.49.
  In this case, the inverters must have an IP address from the range 192.168.178.xxx (xxx stands for a number between 1 - 254).
- Procedure: According to the instructions for the inverter.

Detection via the Solar-Log™ WEB Interface

- For detection on the Solar-Log™, select the device class under the menu Configuration | Device | Definition | Interface with the plus symbol and then select SolarEdge as the manufacturer. Confirm your selection with OK.
- Save your selections and then start the Device Detection under Configuration | Device | Detection.

Note

To enable communication between the Solar-Log™ and the SolarEdge, the Modbus TCP port must be set to 502. (For port setting see manufacturer‘s instructions)

Note

The Solar-Log™ Base only supports the operation of one connected battery / hybrid system.

13 Solinteg (Hybrid system)

13.1 Solinteg - M series (Hybrid system)

Termination	Adressing	Interface
Yes	Yes	Ethernet via dongle

Select the hybrid system „Solinteg“ during the device detection.

Supported models:

- MHS-3K-30, MHS-3.6K-30, MHS-4.2K-30, MHS-5K-30, MHS-6K-30, MHS-8K-30, MHT-4K-25, MHT-5K-25, MHT-6K-25, MHT-8K-25, MHT-10K-25, MHT-12K-25, MHT10K-40, MHT-12K-40, MHT-15K-40, MHT-20K-40, MHT-25K-100, MHT-30K-100, MHT-36K-100, MHT-40K-100, MHT-50K-100

Overview

- Connection via dongle (see manufacturer‘s instructions).
- Connected using network cable (patch cable) and Ethernet router.
- *IP address should be assigned statically/permanently (DHCP is set by default).
- Installation steps:
  - Switch off the inverter and Solar-Log™.
  - Connect the inverter to the network (RJ45).
  - Connect Solar-Log™ to the network (RJ45).
  - Assign the IP address according to the manufacturer‘s instructions.

Connect the hybrid system to the Solar-Log™

The wiring is done using a

- network cable (patch cable) and the
- Ethernet router.

Optional – connect the inverter to the battery

Wiring and connection setup according to the manufacturer‘s instructions.

Assign IP address

- *A static/fixed IP address can be assigned on the inverter display (recommended).
- Please select an IP address from the same class C subnet of the Solar-Log™.
  Example: Solar-Log™ has 192.168.178.49.
  In this case, the inverters must have an IP address from the range 192.168.178.xxx (xxx stands for a number between 1 - 254).
- Procedure: According to the instructions for the inverter.

Detection via the Solar-Log™ WEB Interface

- For detection on the Solar-Log™, select the device class under the menu Configuration | Device | Definition | Interface with the plus symbol and then select Solinteg as the manufacturer. Confirm your selection with OK.
- Save your selections and then start the Device Detection under Configuration | Device | Detection.

Note!

The inverter does not have an integrated battery, but there is a connection option for a separate battery. Please contact the inverter manufacturer for information on connecting and purchasing the battery.

Note!

The configuration can also be done via app. Please refer to the manufacturer‘s instructions.

Note

The Solar-Log™ Base only supports the operation of one connected battery / hybrid system.

Very important!

For the connection of the devices of the respective manufacturer, please observe the manufacturer‘s documentation in the respective valid version.

14 Sungrow (Hybridsystem)

14.1 Sungrow Residential Hybrid

Termination	Adressing	Interface
No	-*	Ethernet

Select the hybrid system „Sungrow“ during the device detection.

Supported models:

- SH3.0RS, SH3K6, SH3K6-30, SH3.6RS, SH4.0RS, SH4K6, SH4K6-30, SH4.6RS, SH5K-V13, SH5K-30, SH5.0RS, SH5.0RT, SH5.0RT-20, SH5.0RT-V112, SH5.0RT-V122, SH5K-20, SH6.0RS, SH6.0RT, SH6.0RT-20, SH6.0RT-V112, SH6.0RT-V122, SH8.0RT, SH8.0RT-20, SH8.0RT-V112, SH8.0RT-V122, SH10RT, SH10RT-20, SH10RT-V112, SH10RT-V122, SH5T-V11, SH6T-V11, SH8T-V11, SH10T-V11, SH12T-V11, SH15T-V11, SH20T-V11, SH25T-V11

Overview

- Integrated interface.
- Connected using network cable (patch cable) and Ethernet router.
- Communication address can be assigned (DHCP is set by default).
- Installation steps:
  - Switch off the inverter and Solar-Log™.
  - Connect the inverter to the network (RJ45).
  - Connect Solar-Log™ to the network (RJ45).

Connect the hybrid system to the Solar-Log™

The wiring is done using a

- network cable (patch cable/crossover cable) and the
- Ethernet router.

Assign IP address

- An IP address can be assigned via DHCP as well as via static/fixed IP address via the web interface of the inverter (see inverter instructions).
- Please select an IP address from the same class C subnet of the Solar-Log™.
  Example: Solar-Log™ has 192.168.178.49.
  In this case, the inverters must have an IP address from the range 192.168.178.xxx (xxx stands for a number between 1 - 254).
- Procedure: According to the instructions for the inverter.



Note!

To change the IP address, DHCP must be set to „Off“ in the inverter settings. By default, DHCP is set to „On“.

Note!

To avoid any communication problems that may arise, we ask that you always install the latest firmware from the manufacturer.

Note!

The Solar-Log™ Base only supports the operation of one connected battery / hybrid system.

15 Zucchetti Centro Sistemi S.p.a (Hybrid system)

15.1 Azzurro (Hybrid system)

Termination	Addressing	Interface
Yes	Yes	RS485

Select the hybrid system „Azzurro“ during the device detection.

Supported models:

- HYD 3000-ZSS, HYD 3600-ZSS, HYD 4000-ZSS, HYD 4600-ZSS, HYD 5000-ZSS, HYD 6000-ZSS 3PH HYD5000 ZSS, HYD 3000-ZSS HP, HYD 3600-ZSS HP, HYD 4000-ZSS HP, HYD 4600-ZSS HP, HYD 5000-ZSS HP, HYD 6000-ZSS HP, 3PH HYD6000 ZSS, 3PH HYD8000 ZSS, 3PH HYD10000 ZSS, 3PH HYD15000 ZSS, 3PH HYD20000 ZSS, HYD 3PH 110000 ZSS

Overview

- Interface integrated.
- Where to connect: COM interface at the bottom of the device.
- 2-pin wiring.
- The communication address has to be assigned.
- Installation steps:
  - Switch off the device and the Solar-Log™.
  - Connect the device to the Solar-Log™.
  - Assign the communication address.
  - Terminate device.

Connect the device to the Solar-Log™

The wiring is done using a:

- self-made, shielded 2-wire data cable.

Procedure for the models:

- 3PH HYD5000 ZSS, 3PH HYD6000 ZSS, 3PH HYD8000 ZSS, 3PH HYD10000 ZSS, 3PH HYD15000 ZSS, 3PH HYD20000 ZSS, HYD 3PH 110000 ZSS

1. Connect the wires for the cable connection as shown in the following diagram:

Solar-Log™ Base RS485 (A) / (B)	COM-Schnittstelle
Terminal	Pin
► (A) 6 oder (B) 10 (Data+)	► 2 RS485 A1-2
► (A) 9 oder (B) 13 (Data-)	► 3 RS485 B1-1

2. Terminate the inverter according to the manufacturer‘s instructions.

Assign the communication address

- Address range: 1 to 31.
- Procedure: According to the instructions for the inverter (via the LCD display of the inverter).

Procedure for the models:

- HYD 3000-ZSS, HYD 3600-ZSS, HYD 4000-ZSS, HYD 4600-ZSS, HYD 5000-ZSS, HYD 6000-ZSS

1. Connect the wires for the cable connection as shown in the following diagram:

Solar-Log™ Base RS485 (A) / (B)	COM-Schnittstelle
Terminal	Pin
► (A) 6 oder (B) 10 (Data+)	► 3 485A
► (A) 9 oder (B) 13 (Data-)	► 4 485B

2. Terminate the inverter according to the manufacturer's instructions.

Procedure for the models:

- HYD 3000-ZSS HP, HYD 3600-ZSS HP, HYD 4000-ZSS HP, HYD 4600-ZSS HP, HYD 5000-ZSS HP, HYD 6000-ZSS HP

1. Connect the wires for the cable connection as shown in the following diagram:

Solar-Log™ Base RS485 (A) / (B)	COM-Schnittstelle
Terminal	Pin
► (A) 6 oder (B) 10 (Data+)	► 5 485-1TX+
► (A) 9 oder (B) 13 (Data-)	► 6 485-1TX-

2. Terminate the inverter according to the manufacturer's instructions.

Note!

The Solar-Log™ Base only supports the operation of one connected battery / hybrid system.

Note!

The RS485 bus must not be longer than 1000 meters.

Note!

Please set the correct country code. See the manual of the inverter.

Very important!

For the connection of the devices of the respective manufacturer, please observe the manufacturer's documentation in the respective valid version.

03

Battery Energy Storage Systems (BESS)

1 Ads-Tec StoraXe (Battery energy storage systems)

1.1 PowerBooster / StorageRackSystem (Battery energy storage systems)

Termination	Addressing	Interface
No	-*	Ethernet

Select the battery system „Ads-Tec StoraXE“ during the device detection.

Supported models:

- PowerBooster GSS0608, PowerBooster GSS0813
- StorageRackSystem SRS2543

Overview

- Integrated interface.
- Where to connect: The cable entry is located on the underside of the system.
- Wiring via network cable (patch cable) and Ethernet router.
- DHCP is set by default*.
- Installation steps:
  - Switch off the battery system and Solar-Log™.
  - Connect the battery system to the Solar-Log™.
  - Connect the Solar-Log™ to the router.

Connect the battery system to the Solar-Log™.

The wiring is carried out using

- network cable CAT6 or even better CAT7.

Wiring the inverter:

2 inverters are integrated in the system and connected to the system accordingly.

*IP address:

- If required, the IP address of the Ads-Tec StoraXE battery storage system can be adjusted via the HMI-WEB interface of the system. (Please refer to the manufacturer‘s instructions)
- Please also note that the Solar-Log™ Base and the battery storage system are in the same class C subnet.
  Example: Solar-Log™ has 192.168.178.49
  In this case, the battery system must have an IP address from the range 192.168.178.xxx (xxx stands for a number between 1 - 254).
- Procedure: According to the manufacturer‘s instructions.

Detection via the Solar-Log™ WEB Interface

- For detection on the Solar-Log™ , select the device class under the menu Configuration | Device | Definition | Interface with the plus symbol and then select the device class „Battery“, then the manufacturer „Ads-Tec“ and the type „StoraXE“. Confirm your selection with OK.
- Save your selections and then start the Device Detection under Configuration | Device | Detection.

Note on the ModbusTCP interface!

Depending on the device generation, there are different firmwares on the controllers of the battery systems. This can be found on the web interfaces of the systems. This means that different versions of the ModbusTCP interface are also in use. However, newer versions are downward compatible.

The ModbusTCP interface must be activated.
All systems currently supplied with firmware version 2.x.x (this refers to the Ads-Tec firmware) have the ModbusTCP interface activated for reading.
Systems that have already been installed may still have firmware 1.4.x, in which case ModbusTCP is not activated by default. In this case, please contact Ads-Tec support.

If it is also necessary to control the battery system via an external Modbus controller, ModbusTCP write access must be activated; please contact Ads-Tec support in this case too.

Note on the control!

With the current firmware of the battery system controller 2.x.x, a function is implemented that signals to the Solar Log when the batteries are full and thus triggers the function for shutting down the PV system.
If the battery system is completely controlled by external Modbus controllers, the registers listed in the Modbus documentation apply for operation, e.g. operating mode or active and reactive power specifications, etc. See manufacturer's manual.

Note!

There are two different operating modes. The „EMS" and „Master" operating modes. Please be sure to follow the manufacturer's instructions in this regard!

Contact details for Ads-Tec support:
Phone: +49 7022 2522-0
E-Mail: Support.EST@ads-tec-energy.com

2 Intilion (Battery energy storage systems)

2.1 Intilion scalebloc (Battery energy storage systems)

Termination	Addressing	Interface
No	-*	Ethernet

Select the battery system „Intilion: Scalebloc“ during the device detection.

Supported models:

- scalebloc energy, scalebloc power, scalebloc power boost

Overview

- Integrated interface.
- Wiring via network cable (patch cable) and Ethernet router.
  The communication address is set by default to 192.168.2.2 and the subnet mask to 255.255.255.0*.
- Installation steps:
  - Switch off the battery system and Solar-Log™.
  - Connect the battery system to the Solar-Log™ (RJ45).
  - Connect the inverters to the Solar-Log™ according to the inverter instructions.
  - Assign the inverter's communication address according to the inverter instructions (if required).

Connect the battery system to the Solar-Log™.

The wiring is carried out using

- network cable CAT6 or even better CAT7.

*IP address:

- If required, the IP address of the Intilion battery storage system can be adjusted via the WEB interface. (Please follow the manufacturer's instructions)
- Please also note that the Solar-Log™ Base and the battery storage system are in the same class C subnet.

Detection via the Solar-Log™ WEB Interface

- For detection on the Solar-Log™ , select the device class under the menu Configuration | Device | Definition | Interface with the plus symbol and then select „Battery“ as the Device class and then „Intilion“ as the manufacturer and „Scalebloc“ as type. Confirm your selection with OK.
- Save your selections and then start the Device Detection under Configuration | Device | Detection.

Very Important!

To ensure communication with the Solar-Log™ Base, the software version of the Intilion scalebloc must have at least the following version: V05.03.01

Note!

When connecting the Solar-Log™ Base, please make sure to use port XF13 of the ControlShield of the Intilion battery system.

Note!

By default, the battery storage system can be reached via the IP address 192.168.2.2,
which can be changed via the web interface. Please follow the manufacturer's instructions.

Very Important!

If you have any queries regarding the battery system, please contact Intilion support.
https://intilion.com/en/contact

Note!

The Solar-Log™ Base only supports the operation of one connected battery / hybrid system.

2.2 Intilion scalestac (Battery energy storage systems)

Termination	Addressing	Interface
No	-*	Ethernet

Select the battery system „Intilion: Scalestac“ during the device detection.

Supported models:

- scalestac

Overview

- Integrated interface.
- Wiring via network cable (patch cable).
- The default communication address is 192.168.2.100 and the subnet mask is 255.255.255.0*.
- Installation steps:
  - Switch off Intilion scalestac and Solar-Log™.
  - Connect Intilion scalestac to the Internet. (For initial installation)
  - Connect the Solar-Log™ to the external network (if available) or the integrated switch of the Intilion scalestac.
    Important:
    The integrated switch is divided into two areas, please be sure to use the “external network” here.

Wiring the battery system and Solar-Log™

The wiring is done via

- CAT6 or better CAT7 network cable.

*IP address:

- Either set the Solar-Log to DHCP or assign a static IP address.
- Please note that the address of the Solar-Log™ Base must be in the same class C subnet of the external network.
- If required, the IP address of the Intilion battery storage system can be adjusted via the web interface. (Only possible by the manufacturer)

Detection via the Solar-Log™ WEB Interface

- For detection on the Solar-Log™ , select the device class under the menu Configuration | Device | Definition | Interface with the plus symbol and then select „Battery“ as the Device class and then „Intilion“ as the manufacturer and „Scalestac“ as type. Confirm your selection with OK.
- Save your selections and then start the Device Detection under Configuration | Device | Detection.



Very Important!

To ensure communication with the Solar-Log™ Base, the software version of the Intilion scalestac must have at least the following version: V05.01.01.03

Note!

The battery storage of the Intilion scalestac can be reached by default via the IP address 192.168.2.100, which can be changed via the web interface. However, this change can only be made by the manufacturer.

Very Important!

If you have any queries regarding the battery system, please contact Intilion support.
https://intilion.com/en/contact

Note!

The Solar-Log™ Base only supports the operation of one connected battery / hybrid system.

3 Pixii - Battery energy storage systems

3.1 Pixii - Power Sharper (Battery energy storage systems)

Termination	Adressing	Interface
No	Yes	Ethernet

Select the battery system „Pixii: Power Shaper.“ during the device detection.

Supported models:

- Power Shaper, Power Shaper XL, Power Shaper XLP

Overview

- Interface integrated.
- Connect using network cable (patch cable) and Ethernet router
- Communication address must be assigned.
- Installation steps:
  - Switch off the battery system and Solar-Log™.
  - Connect the battery system to the Solar-Log™.
  - Connecting Solar-Log™ to a router.
  - Assign the communication address according to the manufacturer‘s instructions.

Connect the battery system to the Solar-Log™.

The wiring is done using a

- network cable (patch cable/crossover cable) and the
- Ethernet router.

Assign IP address

- A static IP address must be assigned.
- Please select an IP address with the same class C subnet as the Solar-Log™.
  For example: The Solar-Log™ has the IP address 192.168.178.49.
  The battery system in this case has to have a free IP address in the same range (from 192.168.178.1 to 192.168.178.254).
- Procedure: According to manufacturer‘s instructions.

Detection via the Solar-Log™ WEB Interface

- For detection on the Solar-Log™ , select the device class under the menu Configuration | Device | Definition | Interface with the plus symbol and then select „Battery“ as the Device class and then „Pixii“ as the manufacturer. Confirm your selection with OK.
- Save your selections and then start the Device Detection under Configuration | Device | Detection.

Note

The Solar-Log™ Base only supports the operation of one connected battery / hybrid system.

Note

In order to establish communication with the Solar-Log™ Base, the Modbus function must be activated in the battery system. (See manufacturer's instructions)
The Modbus port is 502.

4 RCT Power Storage AC (Battery energy storage systems)

4.1 RCT Power Storage AC (Battery energy storage systems)

Termination	Addressing	Interface
Yes	Yes	RS485

Select the battery system „RCT Power“ during the device detection.

Supported models:

- Power Storage AC 4.0, Power Storage AC 5.0, Power Storage AC 6.0

Overview

- Integrated interface.
- Where to connect: Terminal strip X102 inside the device.
- 2-pin wiring.
- The communication address has to be assigned.
- Installation steps:
  - Switch off the device and the Solar-Log™.
  - Connect the device to the Solar-Log™.
  - Assign the communication address.
  - Terminate device.

Wiring the battery system and Solar-Log™

The wiring is done using a:

- self-made, shielded 2-wire data cable.

Note

The RCT PowerApp has to be downloaded from the PlayStore in order to adjust the device address. Wire connections according to the app instructions.

Procedure:

1. Open the devices according to the devices instructions.
2. Connect the wires for the cable connection as shown in the following diagram:

Solar-Log™ Base RS485 (A) / (B)	Terminal strip X102
Terminal	Pin
► (A) 6 or (B) 10 (Data+)	► +
► (A) 9 or (B) 13 (Data-)	► -

3. Terminate the device according to the manufacturer's instructions.
4. Close the device.

Assign the communication address

- Recommendation: Continuous numbering starting with 1 (range 1-250).
- Setting: via RCT PowerApp.
- Procedure: According to the RCT PowerApp instructions.

Note on the inverter:

Please note that the latest software version (min. 4733) is installed on the RCT Power device and the RS485 working mode is set to „Modbus Slave“ in the APP. (default setting)

To do this, please proceed as follows:

Start „RCT Power App“ and continue:
Click on „ “ ► Log in, password „Installer“ ► Device ► Settings ► Interfaces ► RS485.

Select the option „Modbus Slave“ under „RS485 working mode“ and enter the communication address of the inverter under „RS485 address“. After completing the setting, press „Flash“.

Note!

The Solar-Log™ Base only supports the operation of one connected battery / hybrid system.

4.2 RCT Power Commercial Storage (Battery energy storage systems)

Termination	Adressing	Interface
No	Yes	Ethernet or
Yes	Yes	RS485

Select the battery system „RCT Power Commercial“, during the device detection.

Supported models:

- CESS 200, 450, 700, 900

Overview Ethernet

- Interface integrated.
- Connect using network cable (patch cable) and Ethernet router
- Communication address must be assigned.
- Installation steps:
  - Switch off the battery system and Solar-Log™.
  - Connect the battery system to the Solar-Log™.
  - Connecting Solar-Log™ to a router.
  - Assign the communication address according to the manufacturer‘s instructions.

Connect the battery system to the Solar-Log™.

The wiring is done using a

- network cable (patch cable/crossover cable) and the
- Ethernet router.

Assign IP address

- A static IP address must be assigned.
- Please select an IP address with the same class C subnet as the Solar-Log™.
  For example: The Solar-Log™ has the IP address 192.168.178.49.
  The battery system in this case has to have a free IP address in the same range (from 192.168.178.1 to 192.168.178.254).
- Procedure: According to manufacturer‘s instructions.

Detection via the Solar-Log™ WEB Interface

- For detection on the Solar-Log™ , select the device class under the menu Configuration | Device | Definition | Interface with the plus symbol and then select „Battery“ as the Device class and then „RCT Power“ as the manufacturer. Confirm your selection with OK.
- Save your selections and then start the Device Detection under Configuration | Device | Detection.



Note

Settings can be made via the system‘s touchscreen, which can also be used to view the system‘s values and data. Please be sure to follow the manufacturer‘s instructions.

Overview RS485

- Interface integrated.
- Where to connect: XP3 or X2 terminal strip (depending on model) inside the device.
- 2-pin wiring.
- The communication address has to be assigned.
- Installation steps:
  - Switch off the device and the Solar-Log™.
  - Connect the device to the Solar-Log™.
  - Assign the communication address according to the manufacturer's instructions.
  - Terminate device.

Wiring the battery system and Solar-Log™

The wiring is done using a:

- self-made, shielded 2-wire data cable.

Procedure:

1. Open the devices according to the devices instructions.
2. Connect the wires for the cable connection as shown in the following diagram:

Solar-Log™ Base RS485 (A) / (B)	Terminal strip XP3 Model CESS 200	Terminal strip X2 Models CESS 450, 700, 900
Terminal	Pin	Pin
► (A) 6 or (B) 10 (Data+)	► 9 RS485-1A	► 1 RS485-A
► (A) 9 or (B) 13 (Data-)	► 10 RS485-1B	► 2 RS485-B

3. Terminate the device according to the manufacturer's instructions.
4. Close the device.



Note

The Solar-Log™ Base only supports the operation of one connected battery / hybrid system.

5 SMA - Battery energy storage systems

5.1 SMA - Sunny Island (Battery energy storage systems)

Termination	Adressing	Interface
No	Yes	Ethernet

Select the battery system „SMA: Sunny Island“ during the device detection.

Supported models:

- SI3.0M-11
- SI4.4M-11
- SI6.0H-11
- SI8.0H-11
- SI4.4M-12
- SI6.0H-12
- SI8.0H-12

Note for models with the ending -11:

The models require a „Speedwire data module Sunny Island“ => SWDMSI-NR10 to communicate via Ethernet.

Overview

- Interface integrated (see note above).
- Connect using network cable (patch cable) and Ethernet router
- Communication address must be assigned.
- Installation steps:
  - Switch off the battery system and Solar-Log™.
  - Connect the battery system to the Solar-Log™.
  - Connecting Solar-Log™ to a router.
  - Assign the inverter‘s communication address according to the inverter manufacturer‘s instructions.

Connect the battery system to the Solar-Log™.

The wiring is done using a

- network cable (patch cable/crossover cable) and the
- Ethernet router.

Assign IP address

- A static IP address must be assigned.
- Please select an IP address with the same class C subnet as the Solar-Log™.
  For example: The Solar-Log™ has the IP address 192.168.178.49.
  The battery system in this case has to have a free IP address in the same range (from 192.168.178.1 to 192.168.178.254).
- Procedure: According to manufacturer's instructions.

Detection via the Solar-Log™ WEB Interface

- For detection on the Solar-Log™ , select the device class under the menu Configuration | Device | Definition | Interface with the plus symbol and then select „Battery" as the Device class and then „SMA" as the manufacturer. Confirm your selection with OK.
- Save your selections and then start the Device Detection under Configuration | Device | Detection.

Note

The Solar-Log™ Base only supports the operation of one connected battery / hybrid system.

Note

Sunny Island battery systems can be connected in a group up to 3 Sunny Island (cluster) in this group, a Sunny Island is the master, while the others are the slaves. In such cases, only the master of this cluster has to be recognized by the Solar-Log? via Ethernet.

Note

Each inverter has to be individually reachable via the network.
To do this, activate the network interface at each inverter via the SMA SUNNY EXPLORER and connect the inverters into the network with a network switch.
Procedure:

► Set the „TCP Server" to „On" in the SMA SUNNY EXPLORER; Port=502.

6 sonnen (Battery energy storage systems)

6.1 sonnen Eco 6.0 / 7.0 (Battery energy storage systems)

Termination	Addressing	Interface
No	-*	Ethernet

Select the battery system „sonnen : Eco 6/7“ during the device detection.

Supported models:

- Eco 6.0
- Eco 7.0

Overview

- Integrated interface
- Connect using network cable (patch cable) and Ethernet router or switch.
- The communication address cannot be assigned (only via DHCP).*
- Installation steps
  - Switch off the battery system and Solar-Log™.
  - Connect the battery system to the Solar-Log™ (RJ45).
  - Connect the inverters to the Solar-Log™ according to the inverter instructions.
  - Assign the inverter‘s communication address according to the inverter instructions (if required).

Connect the battery system to the Solar-Log™.

The wiring is done using a

- network cable (patch cable) and the
- Ethernet router or switch.

*Dynamic IP address (DHCP) for detection and communication:

Both the Solar-Log™ and sonnen Eco 6.0 / 7.0 devices have to be set to obtain their IP addresses automatically (DHCP) and be in the same class C subnet. (The settings for DHCP according the sonnen Eco 6.0 / 7.0 manufacturer‘s instructions.)

Detection via the Solar-Log™ WEB interface

- For the device detection on the Solar-Log™ select „Sonnenbatterie“ in the Network section from the Configuration | Devices | Definition menu and then click on Save.

Note

In addition to the battery, a consumption meter and generation meter are detected (after detection, the consumption meter is active and the generation meter is deactivated).
This makes it possible to monitor a plant without an inverter connection by activating the generation meter in inverter mode.

Note

The Solar-Log™ Base only supports the operation of one connected battery / hybrid system.

6.2 sonnen Eco 8.0 (Battery energy storage systems)

Termination	Addressing	Interface
No	-*	Ethernet

Select the battery system „sonnen : Eco 8“ during the device detection.

Supported models:

- Eco 8.0
- Hybrid 8.1

Overview

- Integrated interface.
- Connect using network cable (patch cable) and Ethernet router or switch.
- The communication address cannot be assigned (only via DHCP).*
- Installation steps:
  - Switch off the battery system and Solar-Log™.
  - Connect the battery system to the Solar-Log™ (RJ45).
  - Connect the inverters to the Solar-Log™ according to the inverter instructions.
  - Assign the inverter‘s communication address according to the inverter instructions (if required).

Connect the battery system to the Solar-Log™.

The wiring is done using a

- network cable (patch cable) and the
- Ethernet router or switch.

*Dynamic IP address (DHCP) for detection and communication:

The sonnen Eco 8.0 is always set to DHCP by default and that is why it is not possible to assign a static IP address to the sonnen Eco 8.0. Both devices need to be in the same subnet mask.

Detection via the Solar-Log™ WEB interface

- For the device detection on the Solar-Log™ select „sonnen“ in the Network section from the Configuration | Devices | Definition menu and then click on Save.



Note

In addition to the battery, a consumption meter and generation meter are detected (after detection, the consumption meter is active and the generation meter is deactivated).
This makes it possible to monitor a plant without an inverter connection by activating the generation meter in inverter mode.

Note

The Solar-Log™ Base only supports the operation of one connected battery / hybrid system.

7 VARTA (Battery energy storage systems)

7.1 VARTA House (Battery energy storage systems)

Termination	Addressing	Interface
No	Yes*	Ethernet

Select the battery system „VARTA: House“ during the device detection.

Supported battery systems:

- VARTA home
- VARTA family
- VARTA element
- VARTA one:
  - one L
  - one XL
- VARTA pulse

Overview

- Integrated interface.
- Connected using network cable (patch cable) and Ethernet router or switch (when assigning a static IP address).
- *The Varta battery system is set to DHCP by default. However, it can also be assigned a static IP address. (Refer to the manufacturer‘s manual).
- Installation steps:
  - Assign a dynamic or a static IP address.
  - Switch off the battery system and Solar-Log™.
  - Connect the battery system to the Solar-Log™ (RJ45).
  - Connect the inverters to the Solar-Log™ according to the inverter instructions.
  - Connect the consumption meter to the Solar-Log™ according to the instructions.
  - Assign the inverter‘s communication address according to the inverter instructions (if required).



Note

The following components have to be used for battery monitoring to work:

- Battery system with net energy meter (at least Varta firmware 3.0.2).
- Inverters.
- Consumption meter.

► The consumption meter is to be installed so that it not records the battery charge. In addition, the "Consumption meter includes battery charge" settings has to be deactivated in the Configuration | Devices | Configuration | Battery menu via the WEB interface.

Connect the battery system to the Solar-Log™.

The wiring is done using a

- network cable (patch cable) and the
- Ethernet router or switch (when assigning a static IP address).

Connect the inverters to each other

The inverters are connected together according to the inverter instructions.

Connect the consumption meter to the Solar-Log™.

The wiring is done using a

- RS485 or
- S0 interface.

Procedure for IP addresses assignment:

In addition to a static, fixed IP, a dynamic IP address can also be assigned.

Dynamic IP adress:

Both devices, the Solar-Log ™, and the VARTA battery system must be provided automatically to IP address (DHCP).

Static IP adress:

- Please select an IP address with the same class C subnet as the Solar-Log™.
  For example: The Solar-Log™ has the IP address 192.168.178.49.
  The battery system in this case has to have a free IP address in the same range (from 192.168.178.1 to 192.168.178.254).
- Procedure: Start according to the battery system's instructions.

Detection via the Solar-Log™ WEB interface

- For the device detection on the Solar-Log™ select „VARTA:House“ in the Network section from the Configuration | Devices | Definition menu.
- Also select the proper interfaces for the meters as well as the inverters. Confirm the selection by clicking on Save.



Note

The Solar-Log™ Base only supports the operation of one connected battery / hybrid system.



Note on VARTA pulse

If a Varta consumption meter is connected to the battery system, an additional consumption meter (bi-direction meter) is detected and recorded by the Solar-Log™ when it is detected. (The consumption meter is active after the detection.)

Additional information about Varta

Battery charging time shift function:

When the plant has to fulfill a percentage-based reduction (x% - EEG/subvention), the Solar-Log™ can shift the charging time of the battery to a period of peak power production, thus eliminating the need to reduce the total output. The Solar-Log™ includes the weather forecast data and plant consumption data into the calculation for battery charging management. This means that Solar-Log™ saves the typical consumption data from the past and checks this data to ensure that the battery is charged completely. The charging times are adjusted accordingly as needed.



Note

A connection to the WEB-Enerest™ portal (only HTTP) and a correct configuration of the plant location and orientation/pitch of the solar modules are necessary for accurate weather data.

7.2 VARTA Industrial (Battery energy storage systems)

Termination	Addressing	Interface
No	Yes*	Ethernet

Select the battery system „VARTA: Industrial“ during the device detection.

Supported battery systems:

- VARTA flex storage E
- VARTA flex storage P

Overview

- Integrated interface
- Connected using network cable (patch cable) and Ethernet router or switch (when assigning a static IP address).
- *The VARTA battery system is set to DHCP by default. However, it can also be assigned a static IP address. (Refer to the manufacturer‘s manual)
- Installation steps:
  - Assign a dynamic or a static IP address.
  - Switch off the battery system and Solar-Log™.
  - Connect the battery system to the Solar-Log™ (RJ45).
  - Connect the inverters to the Solar-Log™ according to the inverter instructions.
  - Connect the consumption meter to the Solar-Log™ according to the instructions.
  - Assign the inverter‘s communication address according to the inverter instructions (if required).



Note

The following components have to be used for battery monitoring to work:

- Battery system with net energy meter (at least Varta firmware 3.0.2).
- Inverters.
- Consumption meter.

► The consumption meter is to be installed so that it not records the battery charge. In addition, the "Consumption meter includes battery charge" settings has to be deactivated in the Configuration | Devices | Configuration | Battery menu via the WEB interface.

Connect the battery system to the Solar-Log™.

The wiring is done using a

- network cable (patch cable) and the
- Ethernet router or switch (when assigning a static IP address).

Connect the consumption meter to the Solar-Log™.

The wiring is done using a

- RS485 or
- S0 interface.

Procedure for IP addresses assignment:

In addition to a static, fixed IP, a dynamic IP address can also be assigned.

Dynamic IP adress:

Both devices, the Solar-Log ™, and the VARTA battery system must be provided automatically to IP address (DHCP).

Static IP adress:

- Please select an IP address with the same class C subnet as the Solar-Log™.
  For example: The Solar-Log™ has the IP address 192.168.178.49.
  The battery system in this case has to have a free IP address in the same range (from 192.168.178.1 to 192.168.178.254).
- Procedure: Start according to the battery system's instructions.

Detection via the Solar-Log™ WEB interface

- For the device detection on the Solar-Log™ select „VARTA:Industrial" in the Network section from the Configuration | Devices | Definition menu.
- Also select the proper interfaces for the meters as well as the inverters. Confirm the selection by clicking on Save.



Note

The Solar-Log™ Base only supports the operation of one connected battery / hybrid system.



Note

If a Varta consumption meter is connected to the battery system, an additional consumption meter (bi-direction meter) is detected and recorded by the Solar-Log™ when it is detected. (The consumption meter is active after the detection.)

Additional information about Varta

Battery charging time shift function:

When the plant has to fulfill a percentage-based reduction (x% - EEG/subvention), the Solar-Log™ can shift the charging time of the battery to a period of peak power production, thus eliminating the need to reduce the total output. The Solar-Log™ includes the weather forecast data and plant consumption data into the calculation for battery charging management. This means that Solar-Log™ saves the typical consumption data from the past and checks this data to ensure that the battery is charged completely. The charging times are adjusted accordingly as needed.



Note

A connection to the WEB-Enerest™ portal (only HTTP) and a correct configuration of the plant location and orientation/pitch of the solar modules are necessary for accurate weather data.

04

Meter

1 External Power Meter (phase total)

1.1 Recording Energy Flows with External Power Meters (phase total)

External power meters can be connected to each Solar-Log™ Base via the S0 input and/or via the RS485 bus.

The Solar-Log™ Base has an S0-In input.

Note

The Solar-Log™ requires a S0 pulse duration of 30-40 ms. That is why we recommend using SDS tested meters that we offer.
We cannot guarantee the functionality of other products.
In addition, the maximum length between the power meters and Solar-Log™ should not exceed 10 m.

Note

S0 meters transmit the measured energy (e.g. 1 kWh) using a fixed number of pulses. As a result, the pulse frequency decreases as the power decreases. For control tasks, the current power is required, which is only transmitted with low accuracy due to the system. Therefore, we **do not** recommend using S0 meters for implementing control tasks.

Note

Consumption meters can be assigned to plant groups.
It is only possible to assign a meter after a rule with the calculation of self-consumption has been activated in the power management configuration Configuration | Feed-in Management.

Note

With the Solar-Log™, the electricity fed into the power grid from a PV plant can be limited.
The actual reduction of output can be set as a fixed rate (kW or %) or dynamic with the local consumption of the generated electricity factored into the actual reduction rate.
Recording the current consumption plays a key role when the local consumption is taken into account for the reduction.
A consumption meter has to be installed to achieve an accuracy of +/- 2%.
It is not generally possible to achieve this accuracy with just a bidirectional meter at the grid connection point. The feed-in limits may be exceeded and there could be irregularities due to different measuring, reading and control intervals. That is why we strongly discourage such installation and the use of S0 meters.

Note

The Solar-Log™ offers the option of a „Fixed Regulation of X% with the Calculation of Self-Consumption."
A general requirement for the fixed regulation of X% is that the inverters used allow the Solar-Log™ to limit the output.
There is a major difference between Solar-Log™ compatible inverters when it comes to power reductions.
Some inverters cannot be limited to 0 watts or 0% of the generator output; they produce a certain amount of residual power even when the output is set to zero. This needs to considered when designing plants with 0% output reduction. For example, the base load always needs to be greater than the residual power output.
There is also a distinct difference between the reaction times of various inverters. The reaction time also depends on the number of devices installed. It is not recommended to use S0 meters for 0% reductions.

- ► For these reasons, Solar-Log GmbH cannot guarantee an absolute 0% feed-in reduction.
- ► It is always necessary to consult the grid operator about the reduction.

External power meters (phase total)

With multiple phase meters, a basic distinction is made between phase-exact and power meters (phase total).

Power meters (phase total) provide the total values from all three phases. The meter calculates the total output (to and from the grid) of the individual phases and provides this total as a single value.

In the example:
Phase 1 supplies 3 kW via an inverter (single phase).
Phase 2 refers to 2 kW (energy).
Phase 3 refers to 1 kW (energy).
With an power meter (phase total), this results in a total of 0 kW.

An example of an power meter (phase total) is the Janitza UMG 104 or the Solar-Log™ PRO380.

2 Solar-Log™ Meter Operating Modes

2.1 Explanation of the Solar-Log™ Meter Operating Modes

There are various setting options when configuring meters in Solar-Log™. These are in particular:

- Deactivated: The recording of consumption has been or is deactivated.
- Generator: The meter values are considered power generation values.
- Consumption meter: Meter that only records the consumption.
- Consumption meter (bi-directional meter): Meter that records consumption and production collectively - the actual consumption is determined by monitoring the inverters.
- Sub-consumer: Meter to record the individual consumption from appliances that was already recorded with a consumption meter.
- Battery meter (bi-directional meter):
  - Records the battery charges and discharges.
- Meter for the entire plant: The entire production from all of the inverters.
- Utility Meter (U+I): Meter for control and reduction functions - including current measurements if necessary with current transformers.
- Utility Meter (U): Meter for control and reduction functions - only voltage measurements.
- Utility Meter (U+I) + Consumption Meter (bi-directional): Meters that are used as Utility Meters (U+I) can also be used as consumption meters (bi-directional) in this mode.



Note

Please make sure that the counter configuration under Configuration | Devices | Configuration | Configuration in the section „Module field, power & lable“, the value entered in the „Maximum AC power“ field, the measuring range to be recorded and the scaling of the consumption graph, in the Solar-Log ™, as well as in the WEB.

3 General Information on Wiring

3.1 Wiring for S0 meter

The S0 connection of the external electricity meter is connected to the Solar-Log™ Base as follows:

SO meters in general

Solar-Log™ Base	Power meter
Terminal	Assignment
► 4	► S0+
► 5	► S0-

No bridge at Solar-Log™ Base.

3.2 Wiring for RS485 meter

The meter's RS485 output can be connected to any RS485 interface (A or B) on the Solar-Log™.

Overview

- 2-pin wiring.
- The communication address has to be assigned.

Installation steps

- Switch off the meter and Solar-Log™.
- Connect the meter to the Solar-Log™.

3.3 Wiring meters to record self-consumption

There are two options to record self-consumption via the Solar-Log™:

- Measuring just the consumption.
- Measuring with bi-directional measurements (two-way measurements) at the grid connection point behind the utility company meter.

Fundamentally, a separate meter needs to be installed to record energy consumption.
The meters used by utility companies generally cannot be used to send data to the Solar-Log™.

Meter connection options to record the total consumption via an RS485/S0 interface.

This meter has to measure the total consumption of the house.
The meters installed by grid operators, or two-way meters, cannot be used to implement this function.

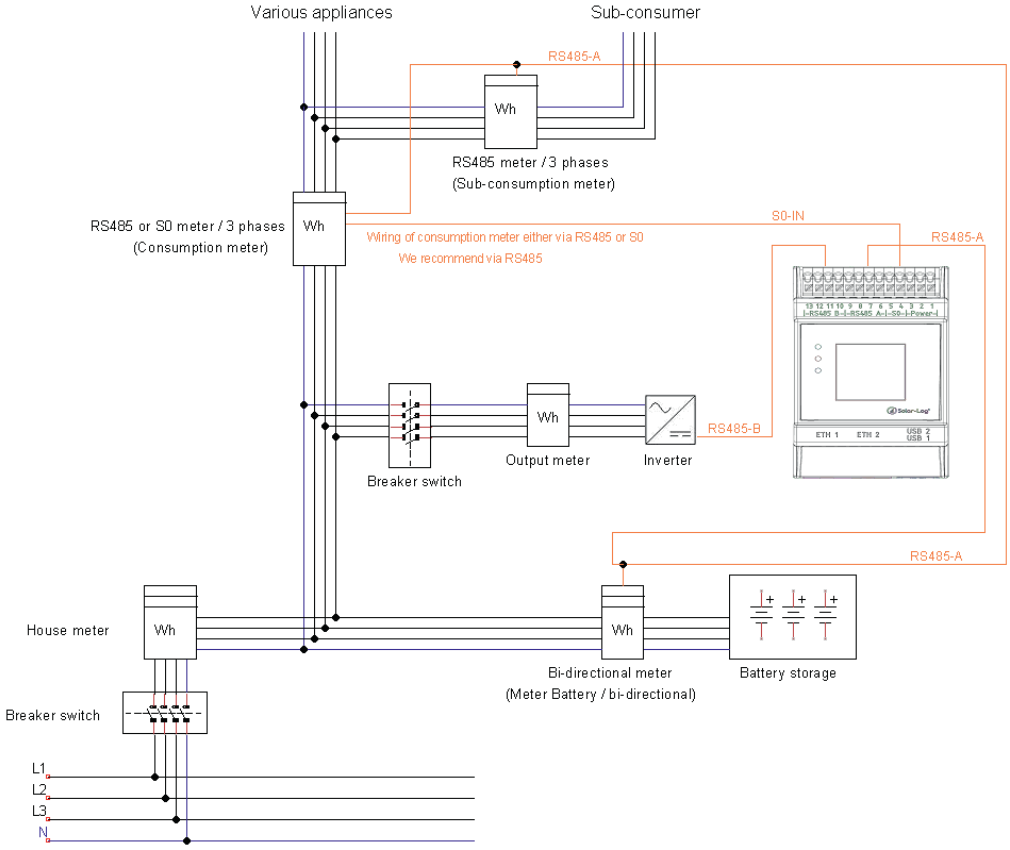

Fig.: Wiring diagram to record self-consumption. (optional with battery storage)

Meter connection options for bi-directional recording of the total consumption via only an RS485 interface.

If there is feed-in in a sub-distribution, the option mentioned above can be used. In this case, the the amount of feed-in power and power obtained from the grid can be recorded with a bi-directional meter. With this, the Solar-Log™ can calculate the consumption.

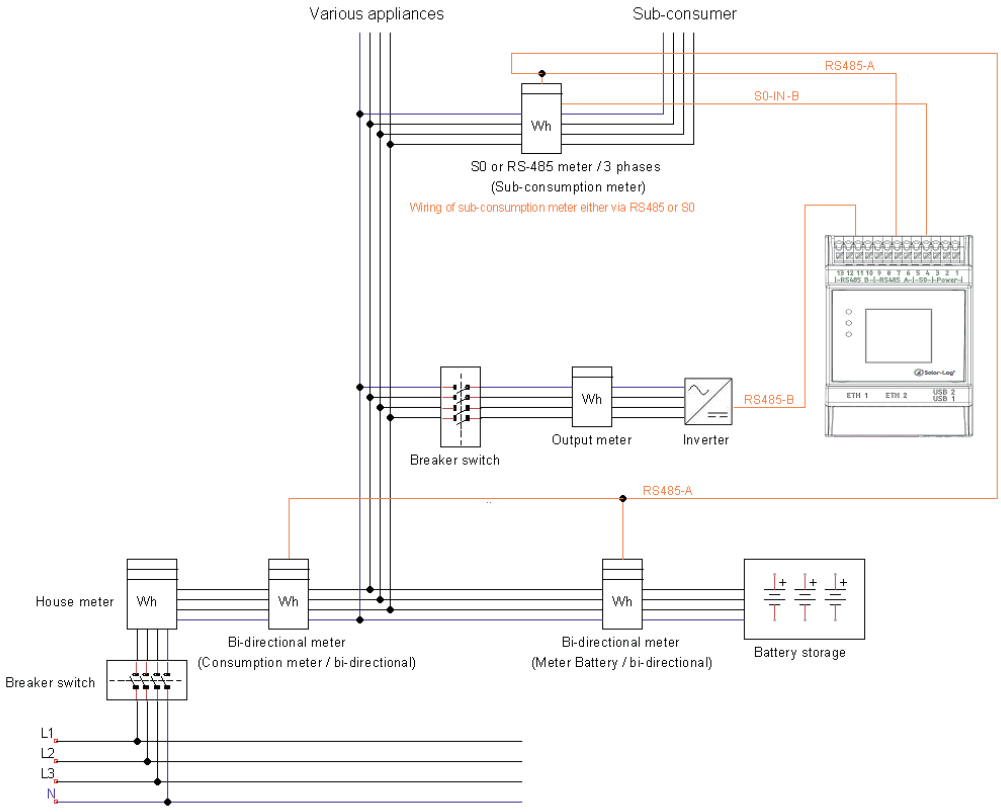

Fig.: Wiring diagram for recording self-consumption – bi-directional meter. (optional with battery storage)

Important information on possible options when using meters for recording consumption:

- Bi-directional meters (only via RS485) in the operating mode „Consumption meter (bi-direction meter)“: if a bi-directional meter is used as consumption meter, further consumption meters can only be configured in the „sub-consumption meter“ mode.
- Uni-directional meters (RS485 or S0) in the operating mode „Consumption meter:“ It is possible to have several meters connected to a single Solar-Log™ device as consumption meters – the consumption value is totaled together. Additional meters are also possible in the „Consumption meter“ operating mode.
- Meters in the „Consumption meter“ operating mode are used to display the consumption values from individual appliances. These consumption values have already been recorded in the total consumption values by the uni- and bi-directional meters.

Note

With the Solar-Log™, the electricity fed into the power grid from a PV plant can be limited.
The actual reduction of output can be set as a fixed rate (kW or %) or dynamic with the local consumption of the generated electricity factored into the actual reduction rate.
Recording the current consumption plays a key role when the local consumption is taken into account for the reduction.
A consumption meter has to be installed to achieve an accuracy of +/- 2%.
It is not generally possible to achieve this accuracy with just a bidirectional meter at the grid connection point. The feed-in limits may be exceeded and there could be irregularities due to different measuring, reading and control intervals. That is why we strongly discourage such installation and the use of S0 meters.

Note

The Solar-Log™ offers the option of a „Fixed Regulation of X% with the Calculation of Self-Consumption."
A general requirement for the fixed regulation of X% is that the inverters used allow the Solar-Log™ to limit the output.
There is a major difference between Solar-Log™ compatible inverters when it comes to power reductions.
Some inverters cannot be limited to 0 watts or 0% of the generator output; they produce a certain amount of residual power even when the output is set to zero. This needs to considered when designing plants with 0% output reduction. For example, the base load always needs to be greater than the residual power output.
There is also a distinct difference between the reaction times of various inverters. The reaction time also depends on the number of devices installed. It is not recommended to use S0 meters for 0% reductions.

- ► For these reasons, Solar-Log GmbH cannot guarantee an absolute 0% feed-in reduction.
- ► It is always necessary to consult the grid operator about the reduction.

4 Solar-Log™ PRO

4.1 Solar-Log™ PRO1

Select „Solar-Log/Pro/RS485“ during the device detection.

Overview

- The communication address has to be assigned.
- 2-pin wiring.
- Installation steps:
  - Switch off the meter and the Solar-Log™.
  - Connect the meter to the Solar-Log™.

Note

The communication address is set to 1 by default, but it can be adjusted if several meters are connected to one RS485 bus.
Maximum number of meters: About 60 meters per bus*#
Bus length: About 1000 meters.
* Please note that the maximum number of meters may vary depending on the level converters used, the baud rate and other installation factors.
# Up to 11 meters can be visualized and the data from up to 60 meters can be analyzed.

Connect the meter to the Solar-Log™

The wiring is done using a

- self-made cable connection.

Connection diagram

According to circuit type 1000 (DIN 43856)

L-IN Terminal 1	Supply line input phase „L1“
L-OUT Terminal 3	Supply line output phase „L1“
Terminal 4 „N“	Neutral conductor connection „N“
Terminal 6 „N“	Neutral conductor connection „N“
Terminal 20, 21	S_0 pulse output
Terminal 23,24	ModBus connection terminal 23 -> A, 24 -> B

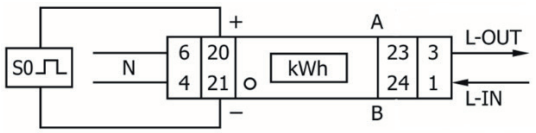

Fig.: Pin assignment

Connection diagram for different operating modes

The meter connections are labeled IN and OUT

Solar-Log™ PRO1 (RS485 or S0) connection assignments

► As consumption or sub-consumer meter	Connection to the grid (IN) – connection for appliances (OUT)
► As generator / generation meter	Connection for the production (IN) – connection to the grid (OUT)

Solar-Log™ PRO1 connection assignments (only RS485)

► As a battery meter (bi-directional)	Connection to the production/grid (IN) – connection to the battery (OUT)

Cable connection via RS485:

Solar-Log™ Base RS485 (A) / (B)	Solar-Log™ PRO1
Terminal	PIN
► (A) 6 or (B) 10 (Data+)	► 23 (A)
► (A) 9 or (B) 13 (Data-)	► 24 (B)

Note

If the meter is the last device on the bus, it has to be terminated at connection block 23 and 24 with a resistor (120 ohm / 0.25W).

Note

The Inepro PRO1 Mod cannot be connected to the inverters with a single bus.
For this reason, use one RS485 connection for the inverters and one RS485 connection for the Solar-Log™ PRO1.

► A combination with an M&T sensor and with the Solar-Log™ PRO380-CT, the Solar-Log™ PRO380 and the Solar-Log™ PRO2 on the same bus is possible.

Possible meter operating modes for the Solar-Log™ PRO1 via RS485:

- Battery meter (bi-directional)
- Sub-consumption meter
- Consumption meter
- Generator

Cable connection via S0 (in):

Solar-Log™ Base	Solar-Log™ PRO1
Terminal	Pin assignment
► 4 - S0+	► 20 - S0+
► 5 - S0-	► 21 - S0-

No bridge at Solar-Log™ Base.

Possible meter operating modes for the Solar-Log™ PRO1 via SO connection:

- Total plant meter
- Sub-consumption meter
- Consumption meter
- Generator

Meter's impulse factor:
1000 p / kWh

Note the SO pulse length for the Solar-Log™ PRO1.

The following values for the SO pulse length are known:

► ≤ 5625W = pulse length 32ms

► > 5625W = pulse length 11,2ms

The Solar-Log™ can process a SO pulse with at least a length of 30 ms. This means a maximum pulse length of 5625W can be defined for the S0 output of the Solar-Log™ PRO1.

4.2 Solar-Log™ PRO2

Select „Solar-Log/Pro/RS485“ during the device detection.

Overview

- The communication address has to be assigned.
- 2-pin wiring.
- Installation steps:
  - Switch off the meter and the Solar-Log™.
  - Connect the meter to the Solar-Log™.

Note

The communication address is set to 1 by default, but it can be adjusted if several meters are connected to one RS485 bus.
Maximum number of meters: About 60 meters per bus*#
Bus length: About 1000 meters.
* Please note that the maximum number of meters may vary depending on the level converters used, the baud rate and other installation factors.
# Up to 11 meters can be visualized and the data from up to 60 meters can be analyzed.

Connect the meter to the Solar-Log™

The wiring is done using a

- self-made cable connection.

Connection diagram

According to circuit type 1000 (DIN 43856)

L-IN Terminal 1	Supply line input phase „L1“
L-OUT Terminal 3	Supply line output phase „L1“
Terminal 4 „N“	Neutral conductor connection „N“
Terminal 6 „N“	Neutral conductor connection „N“
Terminal 18, 19	S_0 pulse output „Forward“ (terminal 18 = „+“)
Terminal 20,21	S_0 pulse output „Reverse“ (terminal 20 = „+“)

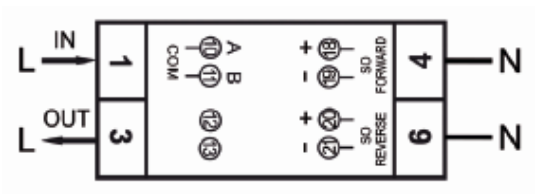

Fig.: Pin assignment

Connection diagram for different operating modes

The meter connections are labeled IN and OUT

Solar-Log™ PRO2 Mod (RS485 or S0) connection assignments

► As consumption or sub-consumer meter	Connection to the grid (IN) – connection for appliances (OUT)
► As generator / generation meter	Connection for the production (IN) – connection to the grid (OUT)

Solar-Log™ PRO2 connection assignments (only RS485)

► As a battery meter (bi-directional)	Connection to the production/grid (IN) – connection to the battery (OUT)

Cable connection via RS485:

Solar-Log™ Base RS485 (A) / (B)	Solar-Log™ PRO2
Terminal	PIN
► (A) 6 or (B) 10 (Data+)	► 10 (A)
► (A) 9 or (B) 13 (Data-)	► 11 (B)

Note

If the meter is the last device on the bus, it has to be terminated at connection block 10 and 11 with a resistor (120 ohm / 0.25W).

Note

The Inepro PRO2 cannot be connected to the inverters with a single bus.
For this reason, use one RS485 connection for the inverters and one RS485 connection for the Solar-Log™ PRO2.

► A combination with an M&T sensor and with the Solar-Log™ PRO380-CT, the Solar-Log™ PRO380 and the Solar-Log™ PRO1 on the same bus is possible.

Possible meter operating modes for the Solar-Log™ PRO2 via RS485:

- Battery meter (bi-directional)
- Sub-consumption meter
- Consumption meter
- Generator

Cable connection via S0 (in):

Solar-Log™ Base	Solar-Log™ PRO2
Terminal	Pin assignment
► 4 - S0+	► 18 - S0+
► 5 - S0-	► 19 - S0-

No bridge at Solar-Log™ Base.

Possible meter operating modes for the Solar-Log™ PRO2 via SO connection:

- Total plant meter
- Sub-consumption meter
- Consumption meter
- Generator

Meter's impulse factor:
1000 p / kWh

4.3 Solar-Log™ PRO380

Select „Solar-Log/Pro/RS485“ during the device detection.

Overview

- The communication address has to be assigned.
- 2-pin wiring.
- Installation steps:
  - Switch off the meter and the Solar-Log™.
  - Connect the meter to the Solar-Log™.

Note

The communication address is set to 1 by default, but it can be adjusted if several meters are connected to one RS485 bus.
Maximum number of meters: About 60 meters per bus*#
Bus length: About 1000 meters.
* Please note that the maximum number of meters may vary depending on the level converters used, the baud rate and other installation factors.
# Up to 11 meters can be visualized and the data from up to 60 meters can be analyzed.

Connect the meter to the Solar-Log™.

The wiring is done using a

- self-made cable connection.

Connection diagram

according to circuit type 1000 (DIN 43856)

Input "L1, L2, L3"	Supply line input phase "L1, L2, L3"
Output "L1, L2, L3"	Supply line output phase "L1, L2, L3"
Terminal "N"	Neutral conductor connection "N"
Terminal 18, 19	S_o pulse output "FOWARD" (terminal 18 = "+")
Terminal 20, 21	S_o pulse output "REVERSE" (terminal 20 = "+")
Terminal 22, 23	ModBus connection terminal 22 -> A, 23 -> B
Terminal 24, 25	External tariff switching (230V AC)

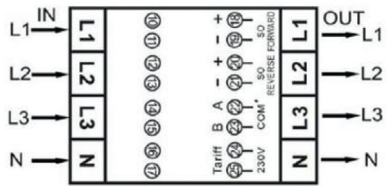

Fig.: Pin assignment

Connection diagram for different operating modes

The meter connections are labeled IN (bottom) and OUT (top).

Solar-Log™ Pro380 (RS485 or S0) connection assignments

► As consumption or sub-consumer meter	Connection to the grid (IN) – connection for appliances (OUT)
► As inverter / generation meter	Connection for the production (IN) – connection to the grid (OUT)

Solar-Log™ Pro380 connection assignments (only RS485)

► As a consumption meter (bi-directional)	Connection for grid (OUT) – connection to the house/plant (IN) (installation position according to the arrow system) --- (The counting direction (evaluation) can be changed in the Solar-Log™ of consumption meters in bidirectional mode in the device configuration).
► As battery meter (bi-directional)	Connection to the production/grid (IN) – connection to the battery (OUT)

Cable connection via RS485:

Solar-Log™ Base RS485 (A) / (B)	Solar-Log™ PRO380
Terminal	PIN
► (A) 6 or (B) 10 (Data+)	► 22 (A)
► (A) 9 or (B) 13 (Data-)	► 23 (B)

Note

If the meter is the last device on the bus, it has to be terminated at connection block 22 and 23 with a resistor (120 ohm / 0.25W).

Note

The Solar-Log™ PRO380 cannot be connected to the inverters with a single bus.
For this reason, use one RS485 connection for the inverters and one RS485 connection for the Solar-Log™ PRO380.
► A combination with an M&T sensor and with the Solar-Log™ PRO380-CT, the Solar-Log™ PRO1 and the Solar-Log™ PRO2 on the same bus is possible.

Possible meter operating modes for the Solar-Log™ PRO380 via RS485:

- Battery meter (bi-directional)
- Total plant meter
- Sub-consumption meter
- Consumption meter
- Consumption meter (bi-directional)
- Generator

Cable connection via S0 (IN):

Solar-Log™ Base	Solar-Log™ PRO380
Terminal	Pin assignment
► 4 - S0+	► 18 - S0+
► 5 - S0-	► 19 - S0-

No bridge at Solar-Log™ Base.

Possible meter operating modes for the Solar-Log™ PRO380 via SO connection (IN):

- Total plant meter
- Sub-consumption meter
- Consumption meter
- Generator

Impulse factor of the meter:
1000 p / kWh

4.4 Solar-Log™ PRO380-CT

Select „Solar-Log/Pro/RS485“ during the device detection.



Important!

The converter ratio can only be set once with this transformer-connected meter.

► It is essential to clarify which converter ratio is to be set for the meter before the initial installation.

When the meter is connected to power, the display alternates between „Set CT“ and „CT5 0005.“.
If one of the arrow keys is pressed, the first number from the left blinks. Using the arrow keys, define the secondary power between /1A and /5A and confirm the selection by pressing both of the arrow keys at the same time for 3 seconds. After that, define the primary power by selecting the 4 numbers from left to right with the arrow keys. The primary power can be freely set between 0005 and 9995. The first three digits can be between 0 and 9 and the last digit between 0 and 5. Confirm every number by pressing both arrow keys for 3 seconds.
The converter ratio has now been set and cannot be modified.

Overview

- The communication address has to be assigned.
- 2-pin wiring.
- Installation steps:
  - Switch off the meter and the Solar-Log™.
  - Connect the meter to the Solar-Log™.



Note

The communication address is set to 1 by default, but it can be adjusted if several meters are connected to one RS485 bus.
Maximum number of meters: About 60 meters per bus*#
Bus length: About 1000 meters.
* Please note that the maximum number of meters may vary depending on the level converters used, the baud rate and other installation factors.
# Up to 11 meters can be visualized and the data from up to 60 meters can be analyzed.

Connect the meter to the Solar-Log™.

The wiring is done using a

- self-made cable connection.

Connection diagram

according to circuit type 1000 (DIN 43856)

CT 1 (in) terminal k (s1) / (out) terminal l (s2)	10 Volts Phase 1 (10/11 internally bridged)
CT 2 (in) terminal k (s1) / (out) terminal l (s2)	12 Volts Phase 2 (12/13 internally bridged)
CT 3 (in) terminal k (s1) / (out) terminal l (s2)	14 volts phase 3 (14/15 internally bridged)
Terminal "N"	Neutral conductor connection "N"
Terminal 18, 19	S_0 pulse output "FORWARD" (terminal 18 = "+")
Terminal 20, 21	S_0 pulse output "REVERSE" (terminal 20 = "+")
Terminal 22, 23	ModBus connection terminal 22 -> A, 23 -> B
Terminal 24, 25	External tariff switching (230V AC)
	The SO signal for the supply is not used when a meter is connected to the Solar-Log™.

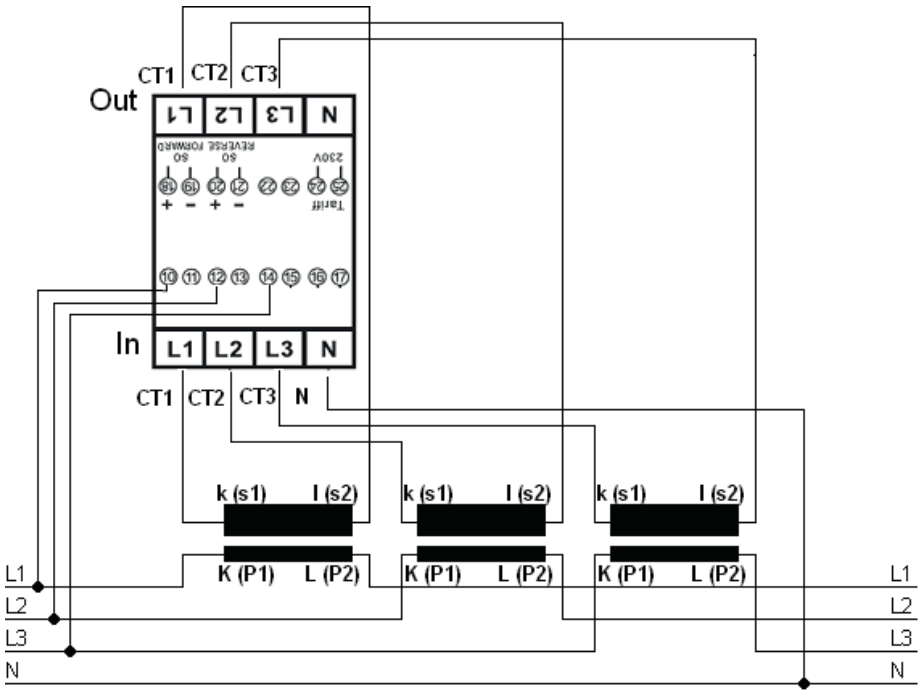

Fig.: Pin assignment

Note

We recommend using a fuse to safeguard the connection lines for the voltage measurement in accordance with the local laws and regulations and with appropriate isolating switches and overload protection devices.

Connection diagram for different operating modes

The pin assignments refer to the figure above.

Solar-Log™ Pro380 CT (RS485 or S0) connection assignments

► As consumption or sub-consumer meter	Access to the grid on converter K(P1) - outgoing line to appliance on converter L(P2)
► As generator / meter for the entire plant	Access to production on converter K(P1) - outgoing line to the grid on converter L(P2)

Solar-Log™ Pro380 CT connection assignments (only RS485)

► As a consumption meter (bi-directional)	Access to the grid on converter L(P2) - outgoing line to house/plant on converter K(P1) (installation position according to the arrow system) --- (The counting direction (evaluation) can be changed in the Solar-Log™ of consumption meters in bidirectional mode in the device configuration).
► As a battery meter (bi-directional)	Access to production/grid on converter K(P1) - outgoing line to the battery on converter L(P2)

Cable connection via RS485:

Solar-Log™ Base RS485 (A) / (B)	Solar-Log™ PRO380-CT (COM)
Terminal	PIN
► (A) 6 or (B) 10 (Data+)	► 22 (A)
► (A) 9 or (B) 13 (Data-)	► 23 (B)

Note

If the meter is the last device on the bus, it has to be terminated at connection block 22 and 23 with a resistor (120 ohm / 0.25W).

Note

The Solar-Log™ PRO380 CT cannot be connected to the inverters with a single bus.
For this reason, use one RS485 connection for the inverters and one RS485 connection for the Solar-Log™ PRO380 CT.

► A combination with an M&T sensor and with the Solar-Log™ PRO380, the Solar-Log™ PRO1 and the Solar-Log™ PRO2 on the same bus is possible.

Possible meter operating modes for the Solar-Log™ PRO380 CT via RS485:

- Battery meter (bi-directional)
- Total plant meter
- Sub-consumption meter
- Consumption meter
- Consumption meter (bi-directional)
- Generator

Cable connection via S0 (IN):

Solar-Log™ Base	Solar-Log™ PRO380-CT
Terminal	Pin assignment
► 4 - S0+	► 18 - S0+
► 5 - S0-	► 19 - S0-

No bridge at Solar-Log™ Base.

Possible meter operating modes for the Solar-Log™ PRO380 CT via SO connection (IN):

- Total plant meter
- Sub-consumption meter
- Consumption meter
- Generator

Meter's impulse factor:
10000 p / kWh

5 Elkor - WattsOn

5.1 Elkor - WattsOn-1100 (3-phase)

Select „WattsOn“ during the device detection.

Overview

- Communication address must be assigned, is set to „1“ by default.
- 2-pin wiring.
- Installation steps:
  - Switch off the meter and the Solar-Log™.
  - Connect the meter to the Solar-Log™.

Connect the meter to the Solar-Log™.

The wiring is done using a

- self-made cable connection.

Wire connection via RS485:

Solar-Log™ Base RS485 (A) / (B)	WattsOn-1100 (RS485)
Terminal	Pin assignment
► (A) 6 or (B) 10 (Data+)	► +
► (A) 9 or (B) 13 (Data-)	► -

Terminate the last meter with a 120 Ohm resistor.

Possible meter operating modes of the WattsOn-1100:

- Battery meter (bi-directional)
- Total plant meter
- Sub-consumer
- Utility Meter (U)
- Utility Meter (U+I)
- Utility Meter (U+I) + Consumption Meter (bi-directional)
- Consumption meter
- Consumption meter (bi-directional)
- Generator

Note!

Please observe the explanations and instructions in the manufacturer‘s manual regarding the installation, wiring and configuration of the device.

Note

Configuration is carried out via the Elkor WattsOn Console software.
Addressing can be adjusted via dip switches and is set to „1“ by default.
The baud rate is set to „9600“ as standard.

Note

The maximum number of devices per interface is 32.

5.2 Elkor - WattsOn-Mark II (3-phase)

Select „WattsOn“ during the device detection.

Overview

- Communication address must be assigned, is set to „1“ by default.
- 2-pin wiring.
- Installation steps:
  - Switch off the meter and the Solar-Log™.
  - Connect the meter to the Solar-Log™.

Connect the meter to the Solar-Log™.

The wiring is done using a

- self-made cable connection.

Wire connection via RS485:

Solar-Log™ Base RS485 (A) / (B)	WattsOn-Mark II (RS485)
Terminal	Pin assignment
► (A) 6 or (B) 10 (Data+)	► D+
► (A) 9 or (B) 13 (Data-)	► D-

Terminate the last meter with a 120 Ohm resistor.

Possible meter operating modes of the WattsOn-Mark II:

- Battery meter (bi-directional)
- Total plant meter
- Sub-consumer
- Utility Meter (U)
- Utility Meter (U+I)
- Utility Meter (U+I) + Consumption Meter (bi-directional)
- Consumption meter
- Consumption meter (bi-directional)
- Generator

Note!

Please observe the explanations and instructions in the manufacturer‘s manual regarding the installation, wiring and configuration of the device.

Note

The maximum number of devices per interface is 32.

Note

The default RS485 communication parameters of the WattsOn-Mark II (Model 1) are:
Baud rate: 9600
Data bits: 8
Parity: None
Stop bits: 1
Device address 1

► For settings, configuration and adjustment of the communication address and termination, see the manufacturer's manual.

6 Inepro

6.1 Inepro 75D

Select „Inepro / DMM“ during the device detection.

Overview

- The communication address cannot be freely assigned.
- 2-pin wiring.
- Installation steps:
  - Switch off the meter and the Solar-Log™.
  - Connect the meter to the Solar-Log™.

Connect the meter to the Solar-Log™.

The wiring is done using a

- self-made cable connection.

Cable connection via RS485:

Solar-Log™ Base RS485 (A) / (B)	Inepro 75D
Terminal	Pin assignment
► (A) 6 or (B) 10 (Data+)	► 8 - RS485A
► (A) 9 or (B) 13 (Data-)	► 7 - RS485B

Possible meter operating modes for the Inepro 75D meter via RS485:

- Total plant metert
- Sub-consumption meter
- Consumption meter
- Generator

Cable connection via S0:

Solar-Log™ Base	Inepro 75D
Terminal	Pin assignment
► 4 - S0+	► 6 - S0+
► 5 - S0-	► 5 - S0-

No bridge at Solar-Log™ Base.

Possible meter operating modes for the Inepro 75D meter via S0:

- Total plant meter
- Sub-consumption meter
- Consumption meter
- Generator

Impulse factor of the meter:
1600 p / kWh

Note

Only one Inepro RS 485 meter can be used for each RS485 interface.

Note

The Inepro 75D cannot be used on the same bus input with RS422 connected inverters.

Note

The Inepro 75D meters are automatically assigned the mod bus address 234 by Solar-Log™ during the detection process.
This address is therefore not allowed to be used for other devices.
After the configuration, the display on the Inepro meter alternates between the meter status and the address display (ID=EA). This can be used to check if Solar-Log™ has correctly detected the meter.

All RS485 meters have to be terminated with a 120Ω resistor between the two pins used.

6.2 Inepro 1250D

Select „Inepro / DMM“ during the device detection.

Overview

- The communication address cannot be freely assigned.
- 2-pin wiring.
- Installation steps:
  - Switch off the meter and the Solar-Log™.
  - Connect the meter to the Solar-Log™.

Connect the meter to the Solar-Log™.

The wiring is done using a

- self-made cable connection.

Cable connection via RS485:

Solar-Log™ Base RS485 (A) / (B)	Inepro 1250D
Terminal	Pin assignment
► (A) 6 or (B) 10 (Data+)	► 11 - RS485A
► (A) 9 or (B) 13 (Data-)	► 10 - RS485B

Possible meter operating modes for the Inepro meter 1250D via RS485:

- Total plant meter
- Sub-consumption meter
- Consumption meter
- Generator

Cable connection via S0:

Solar-Log™ Base	Inepro 1250D
Terminal	Pin assignment
► 4 - S0+	► 9 - S0+
► 5 - S0-	► 8 - S0-

No bridge at Solar-Log™ Base.

Possible meter operating modes for the Inepro 1250D meter via S0:

- Total plant meter
- Sub-consumption meter
- Consumption meter
- Generator

Impulse factor of the meter:
400 p / kWh

Connection diagram for different operating modes

Solar-Log™ Inepro 1250D (RS485 or S0) connection assignments

► As consumption or sub-consumer meter	Connection to the grid (IN) – connection for appliances (OUT)
► As inverter / generation meter	Connection for the production (IN) – connection to the grid (OUT)

Note

Only one Inepro RS 485 meter can be used for each RS485 interface.

Note

The Inepro 1250D cannot be used on the same bus input with RS422 connected inverters.

Note

All three phases have to be connected for the Solar-Log™ to accurately detect the meter.

If an Inepro 1250D is used, the PRG button on the meter must be pressed and held down during entire detection process.

If it is not possible to hold down the PRG button during the whole process, we recommend provisionally connecting the meter to the Solar-Log™ with a short cable after the installation in order to be able to press and hold down
the PRG button during entire detection process.

In a second detection attempt with the inverter, the meter is then detected by the Solar-Log™ even if the PRG button is not pressed.

The detection of an Inepro 1250D in an existing installation can take up to 15 minutes. After the detection, a restructuring of the data takes places which can take up to 45 minutes depending on the amount of data on the devices.

Note

The Inepro 1250D meters are automatically assigned the mod bus address 234 by Solar-Log™ during the detection process.
This address is therefore not allowed to be used for other devices.
After the configuration, the display on the Inepro meter alternates between the meter status and the address display (ID=EA). This can be used to check if Solar-Log™ has correctly detected the meter.

All RS485 meters have to be terminated with a 120Ω resistor between the two pins used.

7 Iskra

7.1 Iskra WS0021

Overview

- 2-pin wiring.
- Installation steps:
  - Switch off the meter and the Solar-Log™.
  - Connect the meter to the Solar-Log™.

Connect the meter to the Solar-Log™.

The wiring is done using a

- self-made cable connection.

Cable connection via S0:

Solar-Log™ Base	Iskra WS0021
Terminal	Pin assignment
► 4 - S0+	► 9 - S0-
► 5 - S0-	► 8 - S0+

No bridge at Solar-Log™ Base.

Possible meter operating modes for the Iskra WS0021 meter via S0:

- Total plant meter
- Sub-consumption meter
- Consumption meter
- Generator

Impulse factor of the meter:
1000 p / kWh

7.2 Iskra WS0031

Overview

- 2-pin wiring.
- Installation steps:
  - Switch off the meter and the Solar-Log™.
  - Connect the meter to the Solar-Log™.

Connect the meter to the Solar-Log™.

The wiring is done using a

- self-made cable connection.

Cable connection via S0:

Solar-Log™ Base	Iskra WS0031
Terminal	Pin assignment
► 4 - S0+	► S0+
► 5 - S0-	► S0-

No bridge at Solar-Log™ Base.

Possible meter operating modes for the Iskra WS0031 meter via S0:

- Total plant meter
- Sub-consumption meter
- Consumption meter
- Generator

Impulse factor of the meter:
500 p / kWh

7.3 Iskra WS1102

Select „Iskra“ during the device detection.

Overview

- 2-pin wiring.
- Installation steps:
  - Switch off the meter and the Solar-Log™.
  - Connect the meter to the Solar-Log™.

Connect the meter to the Solar-Log™.

The wiring is done using a

- self-made cable connection.

Cable connection via RS485:

Solar-Log™ Base RS485 (A) / (B)	Iskra WS1102
Terminal	Pin assignment
► (A) 6 or (B) 10 (Data+)	► A+ (23)
► (A) 9 or (B) 13 (Data-)	► B- (24)

Possible meter operating modes for the Iskra WS1102 meter via RS485:

- Total plant meter
- Sub-consumption meter
- Consumption meter
- Generator

Note

If the meter is the last device on the bus, it has to be terminated at connection block A (23) and B (24) with a resistor (120 ohm).

Note

A maximum of 32 devices can be connected per bus.

8 Janitza „Utility Meter“

8.1 Janitza UMG 104 / UMG 604 / UMG 604-PRO (12V / 24V)

Select „Janitza“ during the device detection.

Note

All information and values are taken from the Janitza manual. No guarantee is given. Please check the manufacturer‘s documents.

The Solar-Log™ Utility Meter is a universal metering device. It can be integrated in both low- and medium-voltage networks (via a transformer) and is needed for various functions:

- controlling voltage-dependent reactive power via the Q(U) function
- controlling reactive power at the feeding point
- recording the measurement data needed for the response signals sent to the grid operator

Only voltage measurements are required for voltage-dependent reactive power reduction Q(U). However, we still recommend using both current and voltage measurements to be able to check that the reduction function is operating properly. Current and voltage measurements are needed for the other functions.

Utility Meter supply voltage:

- 95-240Vac, 45-65Hz or 135-340Vdc

The Utility Meter‘s measuring inputs have the following limits:

- Voltage line conductor AC (without a voltage transformer): 10...300 V AC.
- Voltage phase AC (without a voltage transformer): 17...520 V AC.
- Current (without a current transformer) 0.005, 7.5 A.
- Frequency of the fundamental component: 45 ..65 Hz.

The limit may not be exceeded. For this reason, a measuring transformer needs to be installed for most applications.
We recommend the following transformer ratio:

- Voltage: Secondary 100V
  e.g. at 20kV grid converter 20000:100V.
- Current: Secondary 5A
  e.g. 100:5A.

Note

The Utility Meter that we use is produced by the company Janitza.
Refer to the Janitza UMG 104 / UMG 604 / UMG 604-PRO manual for further technical details.

Note

The Utility Meter cannot be connected to the inverters with a single bus.
For this reason, use one RS485 connection for the inverters and one RS485 connection for the Utility Meter.

Connecting the Utility Meter to the power grid

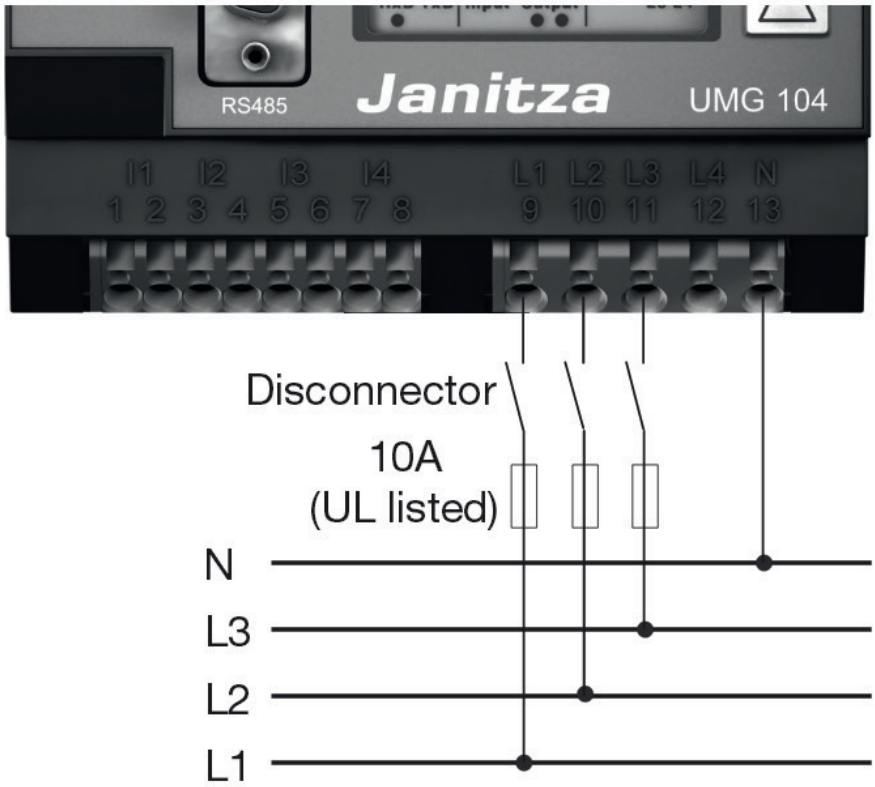

Fig.: Example - UMG 104 Utility Meter connection diagram for voltage measurements in low-voltage power grids (Source: Janitza)

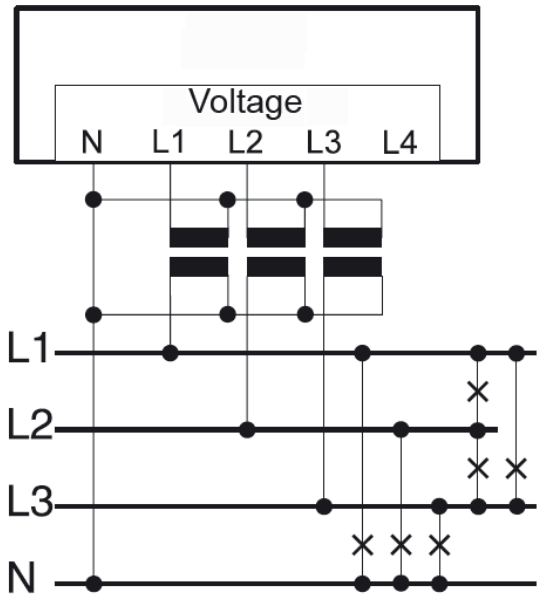

Fig.: Utility Meter connection diagram for voltage measurements with current transformers (medium voltage)
(Source: Janitza)

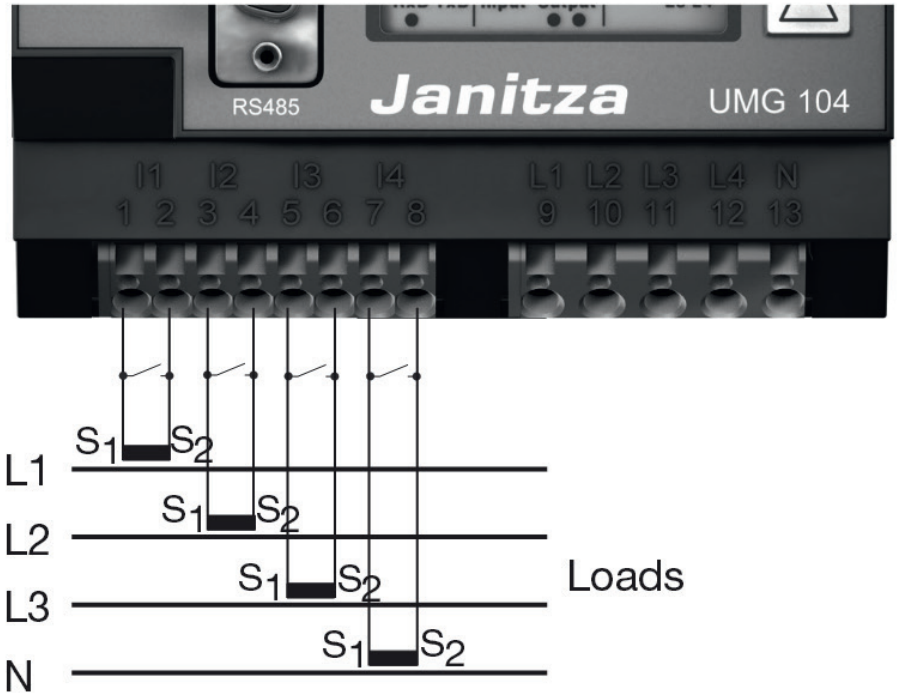

Fig.: Example - UMG 104 Utility Meter connection diagram for current measurements with current transformers

Procedure

- Enter the supply voltage into the Utility Meter

Note

We recommend using a fuse to safeguard the connection lines for the supply voltage. Please follow the instructions in the Janitza UMG 104 / UMG 604 / UMG 604-PRO manual.

Note

Supply voltages that do not correspond to the specifications on the rating plate can cause malfunctions and damage the device.

Caution

The inputs for the supply voltage are dangerous to touch.

Note

The measurement voltage must in effect be at least 10V or an exact measurement is not possible.

Cable connection via RS485:

1. Connect the wires as shown in the following diagram:

Solar-Log™ Base RS485 (A) / (B)	Utility meter terminal strip
Terminal	PIN
► (A) 6 or (B) 10 (Data+)	► 22
► (A) 9 or (B) 13 (Data-)	► 23

2. The RS485 bus must be terminated.
   Install a 120 Ohm, 0.25 W resistor between pin 22 and 23 of the Utility Meter to terminate.
3. Configuring the Utility Meter from the display
   Setting MODBUS Address (PRG 200 = 1)
   Setting Baud rate RS485 (PRG 202 = 2)
   Setting Mode (PRG 203 = 0)
   Setting Current converter primary (PRG 000)
   Setting Current converter secondary (PRG 001)
   Setting Voltage transformer primary (PRG 002)
   Setting Voltage transformer secondary (PRG 003)
   Refer to the accompanying manual of the device for the UMG 104 / UMG 604 / UMG 604-PRO configuration procedure.

Note

The parameter settings need to be adjusted before device detection.
If the parameters differ, the Utility Meter will not be detected by the Solar-Log™.

Note

If there are several meters in one bus, different MODBUS addresses (PRG 200) must be assigned.

- Perform an inverter detection.
  See the installation manual, Chapter „Performing inverter detections.“
- Configure the Utility-Meter under Configuration | Devices | Configuration, select the corresponding Operating mode and click on Save.

Check

- Does the Utility Meter display a positive value for inverters feeding power, the current output (kW)?
  If this is not the case, the current measurements are incorrectly connected.
  If necessary, switch the polarity of measuring inputs.

Note

When replacing the polarity, the cable must not be energized, since the converter can be destroyed otherwise.

Possible meter operating modes for the Janitza UMG 104 / UMG 604 / UMG 604-PRO via RS485:

- Battery meter (bi-directional)
- Total plant meter
- Sub-consumer
- Utility Meter (U)
- Utility Meter (U+I)
- Utility Meter (U+I) + Consumption Meter (bi-directional)
- Consumption meter
- Consumption meter (bi-directional)
- Generator

Connection assignments / installation position of the Janitza UMG 104 / UMG 604 / UMG 604-PRO (12V / 24V) (Utility Meter) in connection with the Solar-Log™

Note

Check the installation position of the current transformers for the different operating modes of the Janitza UMG 104 / UMG 604 / UMG 604-PRO.

Note

Check that the phase assignment of the voltage measurements for the current measurements is correct.

The following output values are recorded in the various operating modes when the installation position is correct.

Operating mode	Output value
► As a Utility Meter (U+I)	with positive output value (kW) for feed-in
► As total plant meter	with positive output value (kW) for feed-in
► As an inverter	with positive output value (kW) for feed-in
► As a consumption or sub-consumer meter:	with positive output value (kW) for consumption
► As a consumption meter (bi-directional)	When the production is greater than the consumption, positive output values (kW) (installation position according to the arrow system) (The counting direction (evaluation) can be changed in the Solar-Log™ of consumption meters in bidirectional mode in the device configuration).
► As a battery meter (bi-directional)	► When the battery storage is being charged, positive output values (kW). ► When the battery storage is being discharged, negative output values (kW).

8.2 Janitza UMG 604 / UMG 604-PRO (12V / 24V) via Ethernet

Termination	Addressing	Interface
No	Yes	Ethernet

Select „Janitza“ during the device detection.

Overview

- Integrated interface.
- Connect using network cable (patch cable) and Ethernet router or switch.
- A static IP address must be assigned.
- Installation steps:
  - Switch off the Janitza device and the Solar-Log™.
  - Connect the Janitza device to the Solar-Log™ (RJ45).

Connect Janitza to the Solar-Log™

The wiring is done using a

- network cable (patch cable) and the
- Ethernet router or switch.

Assign the IP address for detection and communication:

IP addresses assignment according to manufacturer’s instructions. Both devices need to be in the same subnet mask.

Detection via the Solar-Log™ WEB Interface

- For detection on the Solar-Log™ , select the device class under the menu Configuration | Device | Definition | Interface with the plus symbol and then select Janitza as the manufacturer. Confirm your selection with OK.
- Save your selections and then start the Device Detection under Configuration | Device | Detection.



Note

A fixed IP address must be assigned for successful device detection via Ethernet. In addition, registers 200 to 204, which relate to RS232 and RS485, must remain at the factory default setting.



Note

The meter operating modes via Ethernet are identical to those of the RS485 version.

8.3 Janitza UMG 96-PA-/-MID/-MID+ via RS485

Select „Janitza“ during the device detection.

Note

All information and values are taken from the Janitza manual. No guarantee is given. Please check the manufacturer's documents.

Supply voltage Janitza UMG 96-PA-/-MID/-MID+:
Option 230 V:
Nominal range:

- AC 90 V - 277 V (50/60 Hz) or DC 90 V - 250 V, 300 V CATIII

Power consumption:

- max. 4,5 VA / 2 W

Option 24 V:
Nominal range:

- AC 24 V - 90 V (50/60Hz) or DC 24 V - 90 V, 150 V CATIII

Power consumption:

- max. 4,5 VA / 2 W

The measuring inputs of the Janitza UMG 96-PA-/-MID+ have the following limit values:

- Voltage N-L: 0[1]) .. 600 Vrms (max. overvoltage 800 Vrms)
- Voltage L-L: 0[1]) .. 1040 Vrms (max. overvoltage 1350 Vrms)
- Current: 0,005 .. 6 Arms
- Frequency of the fundamental component: 45 Hz .. 65 Hz

[1]) The device only determines measured values if a voltage L1-N of greater than 20 Vrms (4-wire measurement) or a voltage L1-L2 of greater than 34 Vrms (3-wire measurement) is present at the voltage measurement input V1.

The limit may not be exceeded. For this reason, a measuring transformer needs to be installed for most applications.
We recommend the following transformer ratio:

- Voltage: Secondary 100V
  e.g. at 20kV grid converter 20000:100V
- Current: Secondary 5A
  e.g. 100:5A

Note

The Utility Meter that we use is produced by the company Janitza.
Further technical details can be found in the manual of the Janitza UMG 96-PA-/-MID/-MID+.
► The Utility Meter (U / U+I) operating modes are only possible with the Solar-Log™ Base.

Note

The Utility Meter cannot be connected to the inverters with a single bus.
For this reason, use one RS485 connection for the inverters and one RS485 connection for the Utility Meter.

Connection of Janitza UMG 96-PA-/-MID/-MID+ to the power supply grid

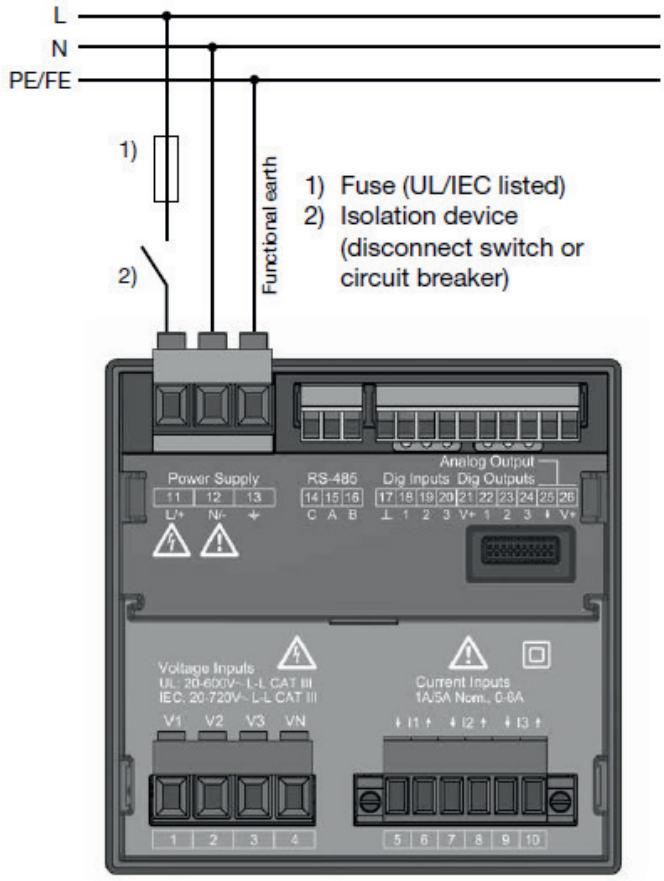

Fig.: Connection example „Supply voltage“ (Source: Janitza)

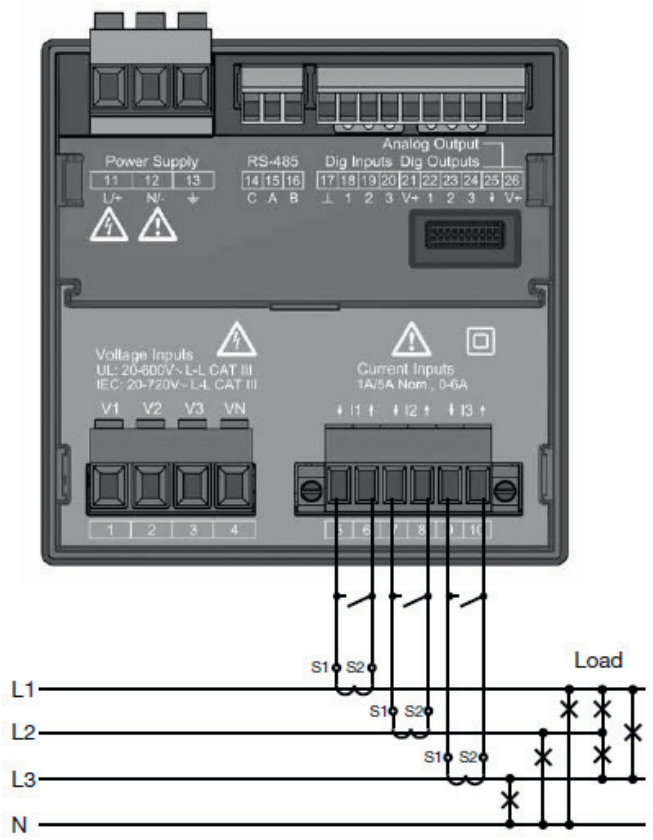

Fig.: Connection example „Current measurement via current transformer“ (Source: Janitza)

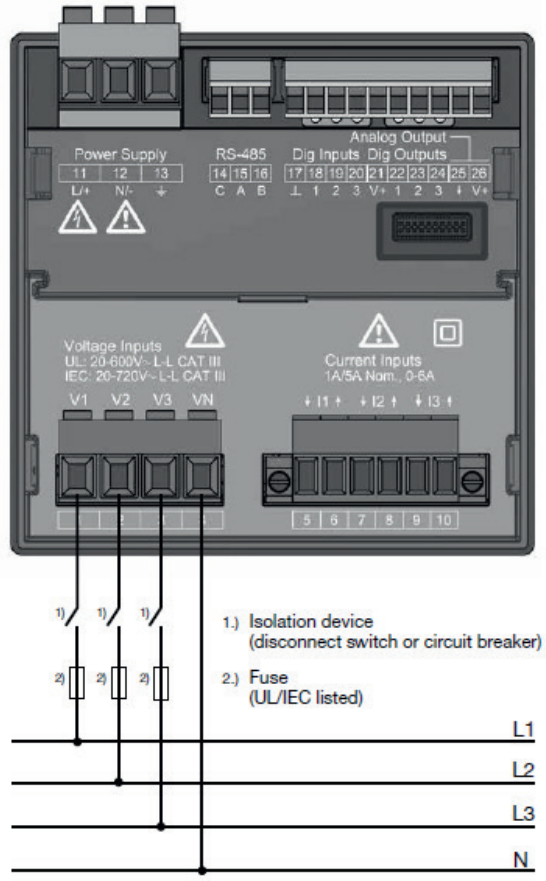

Fig.: Connection example for voltage measurement. (Source: Janitza)

Procedure

- Apply supply voltage to the UMG 96-PA-/-MID/-MID+.

Note

We recommend using a fuse to safeguard the connection lines for the supply voltage. Please follow the instructions in the Janitza UMG 96-PA-/-MID/-MID+ manual.

Note

Supply voltages that do not correspond to the specifications on the rating plate can cause malfunctions and damage the device.

Caution

The inputs for the supply voltage are dangerous to touch.

Note

The measurement voltage must in effect be at least 10V or an exact measurement is not possible.

Cable connection via RS485:

1. Connect the wires as shown in the following diagram:

Solar-Log™ Base RS485 (A) / (B)	Terminal strip Janitza UMG 96-PA-/-MID/-MID+
Terminal	Pin
► (A) 6 or (B) 10 (Data+)	► 15 A
► (A) 9 or (B) 13 (Data-)	► 16 B

2. The RS485 bus must be terminated.
   For termination, install a 120 Ohm, 0.25 W resistor between pin 15 and 16 of the Janitza UMG 96-PA-/-MID/-MID+.
3. Configuration on the Janitza UMG 96-PA-/-MID/-MID+ display:
   Setting MODBUS address (1 = default setting).
   Setting baud rate RS485 (38400 kbps)
   Setting data frame (2 stopbit)
   The procedure for configuring the UMG 96-PA-/-MID/-MID+ can be found in the instructions supplied with the device.

Note

If there are several meters in one bus, different MODBUS addresses must be assigned.

Note

The settings of these parameters must be made before device detection.
With deviating parameters, the Janitza UMG 96-PA-/-MID/-MID+ is not detected by the Solar-Log™.

- Perform an inverter detection
  See Solar-Log™ manual chapter “Device detection”.
- Configure the Janitza under Configuration | Devices | Configuration, select the corresponding Operating mode and click on Save.

Control

- You can check the values for plausibility under Diagnosis | Feed-in management | Utility meter.

Note

When replacing the polarity, the cable must not be energized, since the converter can be destroyed otherwise.

Possible meter operating modes of the Janitza UMG 96-PA-/-MID/-MID+:

- Battery (Bi-directional meter)
- Meter for the entire plant
- Sub-consumer
- Utility Meter (U)
- Utility Meter (U+I)
- Utility Meter (U+I) + Consumption Meter (bi-directional)
- Consumption meter
- Battery (Bi-directional meter)
- Generator

Connection assignment / installation position of the Janitza UMG 96-PA-/-MID/-MID+ in connection with Solar-Log™.

Note

Check the installation position of the current transformers for the different operating modes of the Janitza UMG 96-PA-/-MID/-MID+.

Note

Care must be taken to ensure that the phase assignment of the voltage measurement corresponds to the current measurement.

Note

Check that the phase assignment of the voltage measurements for the current measurements is correct.

The following output values are recorded in the various operating modes when the installation position is correct.

Operating mode	Output value
► As a Utility Meter (U+I)	with positive output value (kW) for feed-in
► As total plant meter	with positive output value (kW) for feed-in
► As an inverter	with positive output value (kW) for feed-in
► As a consumption or sub-consumer meter:	with positive output value (kW) for consumption
► As a consumption meter (bi-directional)	When the production is greater than the consumption, positive output values (kW)
► As a battery meter (bi-directional)	► When the battery storage is being charged, positive output values (kW). ► When the battery storage is being discharged, negative output values (kW).

8.4 Janitza UMG 96 RM-E über RS485

Select „Janitza“ during the device detection.

Note

All information and values are taken from the Janitza manual. No guarantee is given. Please check the manufacturer's documents.

Supply voltage Janitza UMG 96 RM-E:
Option 230 V:
Nominal range:

- AC 90 V - 277 V (50/60 Hz) or DC 90 V - 250 V, 300 V CATIII

Power consumption:

- max. 7,5 VA / 4 W

Option 24 V:
Nominal range:

- AC 24 V - 90 V or DC 24 V - 90 V, 150 V CATIII

Power consumption:

- max. 7,5 VA / 5 W

The measuring inputs of the Janitza UMG 96 RM-E have the following limit values:

- Voltage L-N: 0[1]) .. 300 Vrms (max. overvoltage 520 Vrms)
- Voltage L-L: 0[1]) .. 520 Vrms (max. overvoltage 900 Vrms)
- Current: 0 .. 6 Arms
- Frequency of the fundamental component: 45 Hz .. 65 Hz

[1]) The device only determines measured values if a voltage L1-N of greater than 20 Vrms (4-wire measurement) or a voltage L1-L2 of greater than 34 Vrms (3-wire measurement) is present at the voltage measurement input V1.

The limit may not be exceeded. For this reason, a measuring transformer needs to be installed for most applications.
We recommend the following transformer ratio:

- Voltage: Secondary 100V
  e.g. at 20kV grid converter 20000:100V
- Current: Secondary 5A
  e.g. 100:5A

Note

The Utility Meter that we use is produced by the company Janitza.
Further technical details can be found in the manual of the Janitza UMG 96 RM-E.

Note

The Utility Meter cannot be connected to the inverters with a single bus.
For this reason, use one RS485 connection for the inverters and one RS485 connection for the Utility Meter.

Connection of Janitza UMG 96 RM-E to the power supply grid

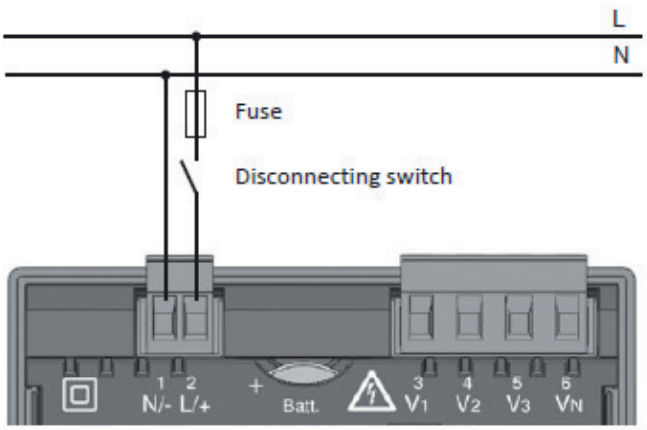

Fig.: Connection example „Supply voltage“ (Source: Janitza)

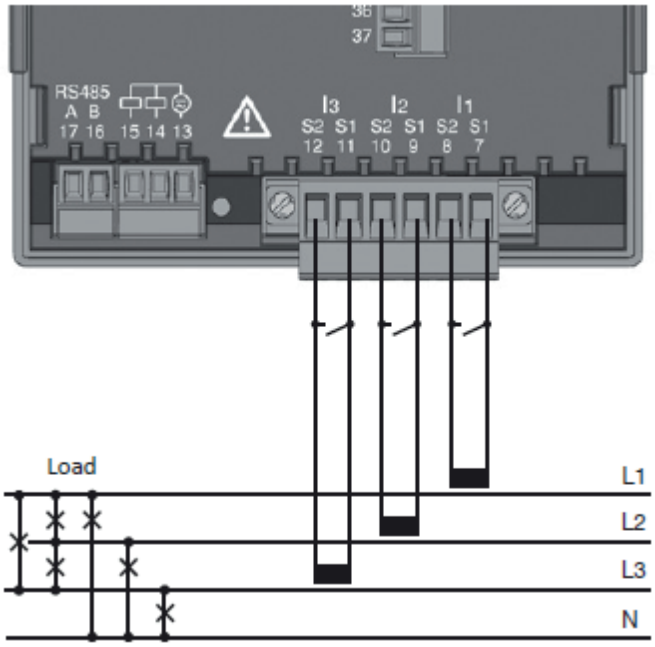

Fig.: Connection example „Current measurement via current transformer“ (Source: Janitza)

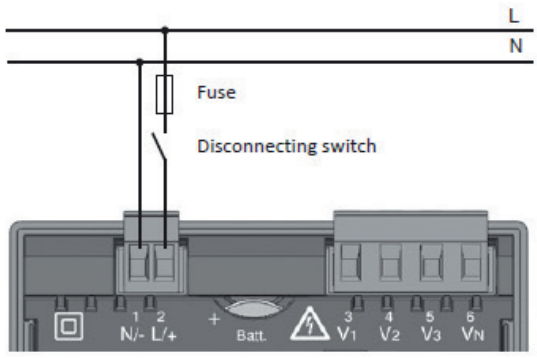

Fig.: Connection example for voltage measurement. (Source: Janitza)

Procedure

- Apply supply voltage to the UMG 96 RM-E.

Note

We recommend using a fuse to safeguard the connection lines for the supply voltage. Please follow the instructions in the Janitza UMG 96 RM-E manual.

Note

Supply voltages that do not correspond to the specifications on the rating plate can cause malfunctions and damage the device.

Caution

The inputs for the supply voltage are dangerous to touch.

Note

The measurement voltage must in effect be at least 10V or an exact measurement is not possible.

Cable connection via RS485:

1. Connect the wires as shown in the following diagram:

Solar-Log™ Base RS485 (A) / (B)	Terminal strip Janitza UMG 96 RM-E
Terminal	Pin
► (A) 6 or (B) 10 (Data+)	► 17 A
► (A) 9 or (B) 13 (Data-)	► 16 B

2. The RS485 bus must be terminated.
   For termination, install a 120 Ohm, 0.25 W resistor between pin 16 and 17 of the Janitza UMG 96 RM-E

3. Configuration on the Janitza UMG 96 RM-E display:
   Setting MODBUS address (1 = default setting).
   Setting baud rate RS485 (38400 kbps)
   Setting data frame (2 stopbit)
   The procedure for configuring the UMG 96 RM-E can be found in the instructions supplied with the device.

Note

If there are several meters in one bus, different MODBUS addresses must be assigned.

Note

The settings of these parameters must be made before device detection.
With deviating parameters, the Janitza UMG 96 RM-E is not detected by the Solar-Log™.

- Perform an inverter detection
  See Solar-Log™ manual chapter “Device detection”.
- Configure the Janitza under Configuration | Devices | Configuration, select the corresponding Operating mode and click on Save.

Control

- You can check the values for plausibility under Diagnosis | Feed-in management | Utility meter.

Note

When replacing the polarity, the cable must not be energized, since the converter can be destroyed otherwise.

Possible meter operating modes of the Janitza UMG 96 RM-E:

- Battery (Bi-directional meter)
- Meter for the entire plant
- Sub-consumer
- Utility Meter (U)
- Utility Meter (U+I)
- Utility Meter (U+I) + Consumption Meter (bi-directional)
- Consumption meter
- Battery (Bi-directional meter)
- Generator

Connection assignment / installation position of the Janitza UMG 96 RM-E in connection with Solar-Log™.

Note

Check the installation position of the current transformers for the different operating modes of the Janitza UMG 96 RM-E.

Note

Auf richtige Phasenzuordnung der Spannungsmessung zur Strommessung ist zu achten.

Note

Check that the phase assignment of the voltage measurements for the current measurements is correct.

The following output values are recorded in the various operating modes when the installation position is correct.

Operating mode	Output value
► As a Utility Meter (U+I)	with positive output value (kW) for feed-in
► As total plant meter	with positive output value (kW) for feed-in
► As an inverter	with positive output value (kW) for feed-in
► As a consumption or sub-consumer meter:	with positive output value (kW) for consumption
► As a consumption meter (bi-directional)	When the production is greater than the consumption, positive output values (kW)
► As a battery meter (bi-directional)	► When the battery storage is being charged, positive output values (kW). ► When the battery storage is being discharged, negative output values (kW).

8.5 Janitza UMG 96 RM-E via Ethernet

Termination	Addressing	Interface
No	Yes	Ethernet

Select „Janitza“ during the device detection.

Overview

- Integrated interface.
- Connect using network cable (patch cable) and Ethernet router or switch.
- A static IP address must be assigned.
- Installation steps:
  - Switch off the Janitza device and the Solar-Log™.
  - Connect the Janitza device to the Solar-Log™ (RJ45).

Connect Janitza to the Solar-Log™

The wiring is done using a

- network cable (patch cable and the
- Ethernet router or switch.

Assign the IP address for detection and communication:

IP addresses assignment according to manufacturer’s instructions. Both devices need to be in the same subnet mask.

Detection via the Solar-Log™ WEB Interface

- For detection on the Solar-Log™ , select the device class under the menu Configuration | Device | Definition | Interface with the plus symbol and then select Janitza as the manufacturer. Confirm your selection with OK.
- Save your selections and then start the Device Detection under Configuration | Device | Detection.

Note

A fixed IP address must be assigned for successful device detection via Ethernet. In addition, registers 200 to 204, which relate to RS232 and RS485, must remain at the factory default setting.

Note

The meter operating modes via Ethernet are identical to those of the RS485 version.

9 Larsen & Toubro

9.1 Larsen & Toubro (WDM313CDNC)

Select „L&T:Vega“ during the device detection.

Overview

- The communication address has to be assigned.
- 2-pin wiring.
- Installation steps:
  - Switch off the meter and the Solar-Log™.
  - Connect the meter to the Solar-Log™.

Connect the meter to the Solar-Log™.

The wiring is done using a

- self-made cable connection.

Cable connection via RS485:

Solar-Log™ Base RS485 (A) / (B)	L&T WDM313CDNC
Terminal	Pin assignment
► (A) 6 or (B) 10 (Data+)	► 9 D+
► (A) 9 or (B) 13 (Data-)	► 10 D-

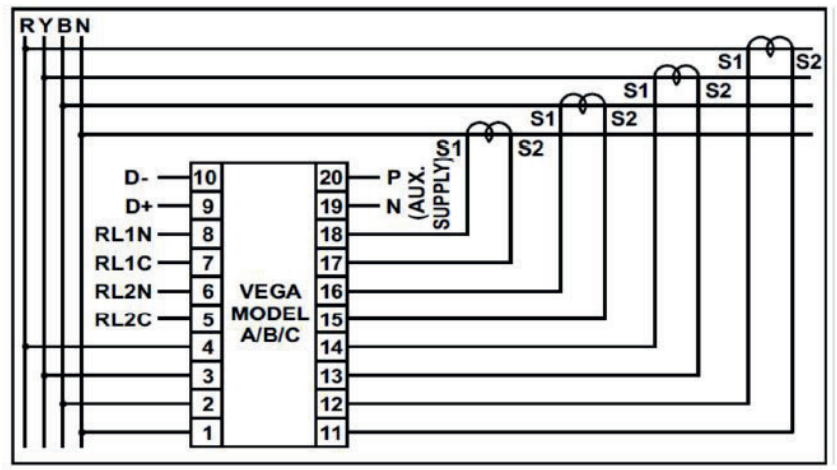

Fig.: Pin assignment (Source: Larsen & Toubro)

Note

The following parameters need to be checked before the device detection to ensure that the meter is detected.
Assign the communication address (start with 1).
Baud rate: 9600 bps
Data bits: 8
Stop bits: 1
Parity: even

► The settings are adjusted via the device's display. (Please refer to the notes and instructions in the manufacture's manual for instructions.)

Possible meter operating modes for the L&T WDM313CDNC via RS485:

- Battery meter (bi-directional)
- Total plant meter
- Sub-consumer
- Utility Meter (U)
- Utility Meter (U+I)
- Utility Meter (U+I) + Consumption Meter (bi-directional)
- Consumption meter
- Consumption meter (bi-directional)
- Generator

Note

The meter cannot be connected to the inverters with a single bus.
For this reason, use one RS485 connection for the inverters and one RS485 connection for the meter.

Note

A maximum of 32 devices can be connected per bus.

Note!

Please refer to manufacturer's manual for information on the installation, wiring and configuration of the device.

10 Mikro PowerMeter

10.1 Mikro PowerMeter DPM680

Select „Mikro:DPM680“ during the device detection.

Overview

- The communication address has to be assigned.
- 3-pin wiring.
- Installation steps:
  - Switch off the meter and the Solar-Log™.
  - Connect the meter to the Solar-Log™.

Connect the meter to the Solar-Log™.

The wiring is done using a

- self-made cable connection.

Cable connection via RS485:

Solar-Log™ Base RS485 (A) / (B)	Mikro PowerMeter DPM680
Terminal	Pin assignment
► (A) 6 or (B) 10 (Data+)	► +
► (A) 8 or (B) 12 GND	► GND
► (A) 9 or (B) 13 (Data-)	► -

Note

The default RS485 communication parameters for the meter are:
Baud: 38400
Data bits: 8
Parity: None
Stop bits: 1

The Solar-Log™ can only communicate with the meter when it has these settings. It is important to check the settings before performing the device detection.

► Assign the communication address (according to the manufacturer‘s manual).

► The settings are adjusted via the device‘s display. (Please refer to the notes and instructions in the manufacture‘s manual for instructions.)

Possible meter operating modes for the Mikro PowerMeter DPM680 via RS485:

- Battery meter (bi-directional)
- Total plant meter
- Sub-consumer
- Utility Meter (U)
- Utility Meter (U+I)
- Utility Meter (U+I) + Consumption Meter (bi-directional)
- Consumption meter
- Consumption meter (bi-directional)
- Generator

Note

A maximum of 32 devices can be connected per bus.

Note

Please refer to manufacturer's manual for information on the installation, wiring and configuration of the device.

11 Real Energy Systems - Prisma Meter

11.1 Prisma Meter via Ethernet

In device detection, select manufacturer “Real Energy Systems” and then type “Prisma”.

Supported models:

- Prisma 310A
- Prisma 310A-Lite

Overview

- Integrated interface.
- Connect using network cable (patch cable) and Ethernet router or switch.
- A static IP address must be assigned.
- Installation steps:
  - Switch off the meter and the Solar-Log™.
  - Wire the Prisma meter to the router or switch and configure according to the manufacturer‘s instructions.
  - Wire the Solar-Log™ to a router or switch. Make sure that both devices are in the same network. (Follow the manufacturer‘s instructions).

The wiring is done using a

- network cable (patch cable) and the
- Ethernet router or switch.

Assign the IP address for detection and communication:

IP addresses assignment according to manufacturer’s instructions. Both devices need to be in the same subnet mask.

Detection via the Solar-Log™ WEB Interface

- For detection on the Solar-Log™ , select the device class under the menu Configuration | Device | Definition | Interface with the plus symbol, select the manufacturer „Real Energy Systems“ and then the type „Prisma“. Confirm your selection by clicking OK.
- Save your selections and then start the Device Detection under Configuration | Device | Detection.

Possible meter operating modes of the Prisma meter:

- Consumption meter (bi-directional)

Note

For successful device detection via Ethernet, port 502 must be open between the IPs of the two devices to ensure communication via Modbus TCP/IP.

Note

Only compatible with the bidirectional meter operating mode.

12 Schneider Electric

12.1 Schneider Electric EM6400NG (3-phase)

Select „Schneider Electric/EM6400NG“ during the device detection.

Overview

- The communication address has to be assigned.
- 2-pin wiring.
- Installation steps:
  - Switch off the meter and the Solar-Log™.
  - Connect the meter to the Solar-Log™.

Connect the meter to the Solar-Log™

The wiring is done using a

- self-made cable connection.

Cable connection via RS485:

Solar-Log™ Base RS485 (A) / (B)	Schneider EM4600NG
Terminal	Pin assignment
► (A) 6 or (B) 10 (Data+)	► 7 (D1 +)
► (A) 9 or (B) 13 (Data-)	► 14 (D0 -)

Termination: 120-ohm resistor at connection pin 7 and 14 on the meter

Note

The following parameters need to be checked before the device detection to ensure that the meter is detected.
Baud rate: 19200 bps
Data bits: 8
Stop bits: 1
Parity: even

► The settings are adjusted via the device‘s display. (Please refer to the notes and instructions in the meter‘s manual for instructions.)

Possible meter operating modes for the Schneider EM6400NG via RS485:

- Battery meter (bi-directional)
- Total plant meter
- Sub-consumer
- Consumption meter
- Consumption meter (bi-directional)
- Generator

Note

The meter cannot be connected to the inverters with a single bus.
For this reason, use one RS485 connection for the inverters and one RS485 connection for the meter.

Note

Different model series from the same manufacturer cannot be used with the same bus.

Note

A maximum of 32 devices can be connected per bus.
The maximum cable length is 900 meters.

Note

Follow the instructions in the manufacturer‘s manual for installation, wiring and configuration of the device.

12.2 Schneider Electric EM6400S (3-phase)

Select „Schneider Electric/EM6400S“ during the device detection.

Overview

- Communication address must be allocated.
- 2-pin wiring
- Installation steps
  - Switch off the meter and the Solar-Log™.
  - Connect the meter to the Solar-Log™.

Connect the meter to the Solar-Log™.

The wiring is done using a

- self-made cable connection.

Cable connection via RS485:

Solar-Log™ Base RS485 (A) / (B)	Schneider EM4600S
Terminal	Pin assignment
► (A) 6 or (B) 10 (Data+)	► 7 (D1)
► (A) 9 or (B) 13 (Data-)	► 14 (D0)

Termination: 120-ohm resistor at connection pin 7 and 14 on the meter

Note

The following parameters need to be checked before the device detection to ensure that the meter is detected.
Baud rate: 9600 bps
Data bits: 8
Stop bits: 1
Parity: even

► The settings are adjusted via the device's display. (Please refer to the notes and instructions in the meter's manual for instructions.)

Possible meter operating modes for the Schneider EM6400S via RS485:

- Battery meter (bi-directional)
- Total plant meter
- Sub-consumer
- Consumption meter
- Consumption meter (bi-directional)
- Generator

Note

The meter cannot be connected to the inverters with a single bus.
For this reason, use one RS485 connection for the inverters and one RS485 connection for the meter.

Note

A maximum of 32 devices can be connected per bus.

Note:

Please refer to manufacturer's manual for information on the installation, wiring and configuration of the device.

12.3 Schneider Electric iEM3000 series (3-phasig)

Select „Schneider Electric: iEM3000 series“ during the device detection.

Supported models:

- 3150, 3155, 3250, 3255, 3350, 3355, 3455, 3555

Overview

- Communication address must be allocated (Address range 1-247).
- 2-pin wiring.
- Installation steps:
  - Switch off the meter and the Solar-Log™.
  - Connect the meter to the Solar-Log™.

Connect the meter to the Solar-Log™.

The wiring is done using a

- self-made cable connection.

Wiring connection via RS485:

Solar-Log™ Base RS485 (A) / (B)	Schneider iEM3000 Series
PIN	PIN
► (A) 6 or (B) 10 (Data+)	► D1/+
► (A) 8 or (B) 12 (GND)	► 0V
► (A) 9 or (B) 13 (Data-)	► D0/-

Note

The following parameters need to be checked before the device detection to ensure that the meter is detected:
Baud rate: 19200 bps
Data bits: 8
Stop bits: 1
Parity: even

► The settings are adjusted via the device's display. (Please refer to the notes and instructions in the meter's manual for instructions.)

Possible meter operating modes for the Schneider iEM3000 Series via RS485:

- Battery meter (bi-directional)
- Total plant meter
- Sub-consumer
- Consumption meter
- Consumption meter (bi-directional)
- Generator

Note

The meter cannot be connected to the inverters with a single bus.
For this reason, use one RS485 connection for the inverters and one RS485 connection for the meter.

Note

A maximum of 32 devices can be connected per bus.

Note!

Please refer to manufacturer's manual for information on the installation, wiring and configuration of the device.

13 Secure Meters

13.1 Secure Meters (3-phase)

Select „Secure“ during the device detection.

Supported Series/Models:

- Series Elite 440:
- Models:
  - 445, 446, 447, 448

Overview

- The communication address has to be assigned.
- 2-pin wiring.
- Installation steps:
  - Switch off the meter and the Solar-Log™.
  - Connect the meter to the Solar-Log™.

Connect the meter to the Solar-Log™

The wiring is done using a

- self-made cable connection.

Cable connection via RS485:

Solar-Log™ Base RS485 (A) / (B)	Secure Meter (RS485)
Terminal	Pin assignment
► (A) 6 or (B) 10 (Data+)	► +
► (A) 9 or (B) 13 (Data-)	► -

Note

The following parameters need to be checked before the device detection to ensure that the meter is detected:
Baud rate: 9600 bps
Data bits: 8
Stop bits: 1
Parity: No

► The settings are adjusted via the device's display. (Please refer to the notes and instructions in the meter's manual for instructions.)

Possible meter operating modes for the Secure Meter:

- Battery meter (bi-directional)
- Total plant meter
- Sub-consumer
- Consumption meter
- Consumption meter (bi-directional)
- Generator



Note!

Follow the instructions in the manufacturer's manual for installation, wiring and configuration of the device.

14 WattNode (CCS)

14.1 WattNode (CCS) (3-phase / 1-phase)

Select „WattNode“ during the device detection.

Supported models:

- WND-WR-MB

Overview

- The communication address has to be assigned.
- 2-pin wiring.
- Installation steps:
  - Switch off the meter and the Solar-Log™.
  - Connect the meter to the Solar-Log™.

Connect the meter to the Solar-Log™

The wiring is done using a

- self-made cable connection.

Cable connection via RS485:

Solar-Log™ Base RS485 (A) / (B)	WattNode (RS485)
Terminal	Pin assignment
► (A) 6 or (B) 10 (Data+)	► B+
► (A) 8 or (B) 12 (GND)	► C
► (A) 9 or (B) 13 (Data-)	► A-

Termination: Via dip switch 7 (see manufacturer‘s meter manual).

Note

The following parameters need to be checked before the device detection to ensure that the meter is detected:
Baud rate: 115200 bps
Data bits: 8
Stop bits: 1
Parity: No

► The settings are adjusted via the device‘s display. (Please refer to the notes and instructions in the meter‘s manual for instructions.)

Possible meter operating modes for the WattNode (CCS):

- Battery meter (bi-directional)
- Total plant meter
- Sub-consumer
- Consumption meter
- Consumption meter (bi-directional)
- Generator



Note!

Follow the instructions in the manufacturer‘s manual for installation, wiring and configuration of the device.

05

Heating rods & Control

1 EGO Smart Heater

1.1 EGO Smart Heater (RS485)

Termination	Addressing	Interface
Yes	No	RS485

Select „EGO“ during the device detection.

Overview

- Integrated interface.
- Where to connect: Terminal strip inside the heating rod.
- 3-pin wiring.
- The communication address does not have to be assigned.
- Installation steps:
  - Switch off the heating rod and Solar-Log™.
  - Connect the heating rod to the Solar-Log™.

Connect the EGO Smart Heater to the Solar-Log™:

The wiring is done using a

- self-made, shielded 3-wire data cable.

General information on managing and prioritizing the EGO Smart Heater via smart energy

The Solar-Log™ can manage and prioritize up to six EGO Smart Heaters with the smart energy function.
The connection of the Smart Heaters can be made in different ways.
Two examples should clearly illustrate the options:
Example 1
Six heating rods are connected via the Ethernet option; it is not possible to connect any additional heating rods via the RS485 interface.
Example 2
One heating rod is connected per interface via the RS485 A and RS485/422 B interface. This allows four heating rods to be connected via Ethernet.

Note

Only one EGO Smart Heating can be operated per RS485 interface.

Procedure

1. Open the heating rod according to its instructions
2. Connect wires as shown in the diagram below:

Solar-Log™ Base RS485 (A) / (B)	EGO Smart Heater terminal strip
Terminal	Terminal
► (A) 6 or (B) 10 (Data+)	► A RS485+
► (A) 8 or (B) 12 GND	► C GND (Shielding)*
► (A) 9 or (B) 13 (Data-)	► B RS485-

3. Terminate the heating rod according to its instructions.
4. Close the heating rod cover.

Note

To ensure that the EGO heating rod control works properly, the EGO heating rod's manual temperature regulator should be set to the maximum temperature. Define the temperature that the Solar-Log™ should control via the WEB interface of the Solar-Log™ in the Configuration | Devices | Configuration menu.

***)Note**

Shielding unilaterally contacted. Either on the EGO Smart Heater or on the control (remote station).

1.2 EGO Smart Heater via Ethernet

Termination	Addressing	Interface
No	-*	Ethernet

Select „EGO“ during the device detection.

Overview

- Integrated interface.
- Connected using network cable (patch cable) and Ethernet router or switch.
- The communication address cannot be assigned (only via DHCP)*.
- Installation steps:
  - Switch off the heating rod and Solar-Log™.
  - Connect the heating rod to the Solar-Log™ (RJ45).

Connect the EGO Smart Heater to the Solar-Log™

The wiring is done using a

- network cable (patch cable) and the
- Ethernet router or switch.

*Dynamic IP address (DHCP) for detection and communication:

Both the Solar-Log™ and the EGO Smart Heater devices have to be set to obtain their IP addresses automatically (DHCP) and be in the same class C subnet.

Detection via the Solar-Log™ WEB Interface

- For detection on the Solar-Log™ , select the device class under the menu Configuration | Device | Definition | Interface with the plus symbol and then select Benning as the manufacturer. Confirm your selection with OK.
- Save your selections and then start the Device Detection under Configuration | Device | Detection.

Note

With the Ethernet version of EGO can be up to 6 EGO Smart Heater, controlled and prioritized via the Smart Energy Function of the Solar-Log ™.

Note

To ensure that the EGO heating rod control works properly, the EGO heating rod's manual temperature regulator should be set to the maximum temperature. Define the temperature that the Solar-Log™ should control via the WEB interface of the Solar-Log™ in the Configuration | Devices | Configuration menu.

2 Heating rod my-PV AC ELWA-E

2.1 Heating rod my-PV AC ELWA-E via Ethernet

Termination	Adressing	Interface
No	Yes	Ethernet

Select „my-PV“ during the device detection.

Overview

- Integrated interface.
- Connect using network cable (patch cable) and Ethernet router or switch.
- A static IP address must be assigned.
- Installation steps:
  - Switch off the heating rod and the Solar-Log™.
  - Connect the heating rod to the Solar-Log™ (RJ45).

Connect the heating rod to the Solar-Log™

The wiring is done using a

- Network cable (patch cable) and the
- Ethernet router or switch.

Assign the IP address for detection and communication:

The my-PV heating rod is set to DHCP by default. A static IP address must be defined in its web menu. Both devices need to be in the same subnet mask Detection via the Solar-Log™ WEB interface.

Detection via the Solar-Log™ WEB interface

- For detection on the Solar-Log™, select the device class under the menu
- Configuration | Device | Definition | Interface with the plus symbol and then select my-PV as the manufacturer. Confirm your selection with OK
- Save your selections and then start the Device Detection under Configuration | Device | Detection and start the device detection.

Note

For the communication with the Solar-Log™ to work, the control type in the heating rod web menu has to be set to Modbus TCP and the power timeout to 60.

Note

Up to 6 heating rods can be controlled and prioritized with the Smart Energy function of the Solar-Log™.

Note

To ensure that the my-PV heating rod control works properly, the heating rod's manual temperature regulator should be set to the maximum temperature. Define the temperature that the Solar-Log™ should control via the WEB interface of the Solar-Log™ in the
Configuration | Devices | Configuration menu.

=> recommendation of my-PV max. 60°C for drinking water (otherwise higher danger of calcification)

Note

As the optional control of a minimum storage tank temperature is also controlled via the Solar-Log™, the use of the my-PV (AC ELWA-E) internal function for hot water backup is not possible or necessary!

2.2 Heating rod my-PV AC ELWA 2 via Ethernet

Termination	Adressing	Interface
No	Yes	Ethernet

Select „my-PV“ during the device detection.

Overview

- Integrated interface.
- Connect using network cable (patch cable) and Ethernet router or switch.
- A static IP address must be assigned.
- Installation steps:
  - Switch off the heating rod and the Solar-Log™.
  - Connect the heating rod to the Solar-Log™ (RJ45).

Connect the heating rod to the Solar-Log™

The wiring is done using a

- Network cable (patch cable) and the
- Ethernet router or switch.

Assign the IP address for detection and communication:

The my-PV heating rod is set to DHCP by default. A static IP address must be defined in its web menu. Both devices need to be in the same subnet mask Detection via the Solar-Log™ WEB interface.

Detection via the Solar-Log™ WEB interface

- For detection on the Solar-Log™, select the device class under the menu
- Configuration | Device | Definition | Interface with the plus symbol and then select my-PV as the manufacturer. Confirm your selection with OK
- Save your selections and then start the Device Detection under Configuration | Device | Detection and start the device detection.

Note

For the communication with the Solar-Log™ to work, the control type in the heating rod web menu has to be set to Modbus TCP and the power timeout to 60.

Note

Up to 6 heating rods can be controlled and prioritized with the Smart Energy function of the Solar-Log™.

Note

To ensure that the my-PV heating rod control works properly, the heating rod's manual temperature regulator should be set to the maximum temperature. Define the temperature that the Solar-Log™ should control via the WEB interface of the Solar-Log™ in the
Configuration | Devices | Configuration menu.

=> recommendation of my-PV max. 60°C for drinking water (otherwise higher danger of calcification)

Note

As the optional control of a minimum storage tank temperature is also controlled via the Solar-Log™, the use of the my-PV (AC ELWA-E) internal function for hot water backup is not possible or necessary!

3 my-PV - AC-THOR - Control device

3.1 my-PV - AC THOR via Ethernet

Termination	Adressing	Interface
No	Yes	Ethernet

Select „my-PV“ during the device detection.

Supported models:

- AC-THOR
- AC-THOR 9s

Overview

- Integrated interface.
- Connect using network cable (patch cable) and Ethernet router or switch.
- A static IP address must be assigned.
- Installation steps:
  - Switch off the my-PV - AC-THOR and Solar-Log™.
  - Connect my-PV - AC-THOR to Solar-Log™ (RJ45).

Connect the my-PV - AC-THOR to the Solar-Log™

The wiring is done using a

- Network cable (patch cable) and the
- Ethernet router or switch.

IP address assignment for detection and communication:

The my-PV - AC-THOR is always set to DHCP by default, a static IP address can be set in the my-PV web interface. Both devices must be in the same subnet..

Detection via the Solar-Log™ WEB interface

- For detection on the Solar-Log™, select the device class under the menu
- Configuration | Device | Definition | Interface with the plus symbol and then select my-PV as the manufacturer and Type AC-ELWA-E/AC-THOR. Confirm your selection with OK
- Save your selections and then start the Device Detection under Configuration | Device | Detection and start the device detection.

Note

For the communication with the Solar-Log™ to work, the control type in the AC-THOR web menu has to be set to Modbus TCP and the power timeout to 60.

Note

One AC-THOR can be controlled via the Solar-Log™.

06

Heat pumps

1 IDM Heat pumps

1.1 IDM Heat pumps

Termination	Addressing	Interface
No	Yes	Ethernet

Select „IDM“ during the device detection.

Supported Models:

- AERO ALM:
  2-8, 4-12, 6-15, 10-24, 10-50 Max
- AERO ILM:
  2-7, 4-13, 7-13
- AERO SLM:
  3-11 (HGL)
- iPump:
  A 3-11, T 3-13
- TERRA AL:
  17 Twin, 24 Twin, 32 Twin, 60 Max
- TERRA IL:
  7 (HGL), 9 (HGL), 11 (HGL)
- TERRA ILM:
  7-13
- TERRA ML:
  6-8, 8-13, 11-18
- TERRA SW:
  6, 8, 10, 13, 17, 18 H, 20 Twin, 26 Twin, 28 H, 35 Twin, 42 Twin, 50 Max H, 55 Max, 70 Max, 70 Max H, 85 Max, 90 Max H, 110 Max, 140 Max, 140 Max H, 170 Max, 180 Max H, 220 Max, 280 Max
- TERRA SWM:
  3-13

Overview

- Integrated interface.
- The IDM heat pump‘s IP address must be adapted.
- Connected using network cable (patch cable) and Ethernet router or switch (when assigning a static IP address).
  - Another option is to connect directly to the main board of the navigator with a crossover cable.
- Installation steps
  - Assign a static IP address to the IDM heat pump or set the IDM heat pump to DHCP.
  - Connect the IDM heat pump to a switch (with a static IP address) or Ethernet router.
  - Connect the Solar-Log™ to a switch (with a static IP address) or Ethernet router.

Assigning IP addresses

- Configure the address according to the manufacturer's manual.
- The DHCP range (IP address) for the heat pump has to be in the same subnet as the Solar-Log™.
- Procedure: According to the manufacturer's manual.

Detection from the Solar-Log™

- For the detection on the Solar-Log™, select „IDM" as the manufacturer in the Configuration | Devices | Definition menu from the Network section. Confirm the selection with Save.

Note

The IDM heat pump must be equipped with at least Navigator 1.7.

Only one IDM heat pump can be connected and visualized per Solar-Log™.

Note

Additional note regarding the IDM Navigator 2.0:
The following should be taken into account for IDM heat pumps that are to be equipped with the Navigator 2.0:
To ensure recognition, the PV signal must be set to Solar-Log™ in the "Photovoltaics" menu item on the Navigator.

2 Stiebel-Eltron Heat pumps

2.1 Stiebel Eltron Heat pumps (ISG)

Termination	Addressing	Interface
No	Yes	Ethernet

Select „Stiebel Eltron“ during the device detection.

Supported Models:

- WPC:
  04, 05, 07, 10, 13
- WPF:
  04, 05, 07, 10, 13, 16
- WPL:
  10 AC, 10 I, 15 AS, 19 I, 20 A, 24 I 25 A, 33 HT

Overview

- Integrated interface.
- The Stiebel-Eltron heat pump‘s IP address must be adapted.
- Connected using network cable (patch cable) and Ethernet router or switch (when assigning a static IP address).
- Installation steps:
  - Assign heap pump a static IP address or via
    DHCP (enabled by default).
  - Connect the heat pump to a switch (with a static IP address) or Ethernet router.
  - Connect the Solar-Log™ to a switch (with a static IP address) or Ethernet router.

Assigning IP addresses

- Configure the address according to the manufacturer‘s manual.
- The DHCP range (IP address) for the heat pump has to be in the same subnet as the Solar-Log™.
- Procedure: According to the manufacturer‘s manual.

Detection via the Solar-Log™ WEB Interface

- For detection on the Solar-Log™ , select the device class under the menu Configuration | Device | Definition | Interface with the plus symbol and then select Stiebel-Eltron as the manufacturer. Confirm your selection with OK.
- Save your selections and then start the Device Detection under Configuration | Device | Detection.
- After the detection, Stiebel-Eltron appears as a switching device in the Configuration | Smart Energy | Switching Groups menu.
- Assign the switch contact of the Stiebel heat pump to a switching group (the switch contact only needs to be defined in the software, no hardware is required) and configure the specific control for the heat pump. For more information on Smart Energy such as configuration, functionality and application examples, refer to Chapter 5.2: „Controlling Heat Pumps with a Grid Company Blocking Signal“:
  SolarLog_Manual_Smart_Energy_EN.pdf
- The heat pump appears in the Diagnostics | Smart Energy | Status (current) and history menu (also with several temperature values that are retrieved and recorded from the heat pump).

You have to access the Solar-Log™ WEB interface to complete the configuration.

Subsequent procedure:

- After the detection, Stiebel-Eltron appears as a switching device in the Configuration | Smart Energy | Switching Groups menu.
- Assign the switch contact of the Stiebel heat pump to a switching group (the switch contact only needs to be defined in the software, no hardware is required) and configure the specific control for the heat pump. For more information on Smart Energy such as configuration, functionality and application examples, refer to Chapter 5.2: „Controlling Heat Pumps with a Grid Company Blocking Signal“: https://www.solar-log.com/manuals/manuals/en_GB/SolarLog_Manual_Smart_Energy_EN.pdf
- The heat pump appears in the Diagnostics | Smart Energy | Status (current) and history menu (also with several temperature values that are retrieved and recorded from the heat pump).

Note

If the threshold configured for the surplus in the Solar-Log™ is exceeded, the heat pump receives a protocol-level release signal. This signal is checked by the heat pump control and released there.

Note

Without the assignment of a switching group, although data from the heat pump is recorded, it is not visualized in the web interface.

Note

DHCP is enabled by default. DHCP has to be disabled in order to manually assign an IP address (refer to the Stiebel-Eltron manual).

Note

In order to receive data from the Stiebel-Eltron heat pump, the "Stiebel ISG" (Internet Service Gateway) has to be installed in addition and a license is required for the existing Modbus interface in the ISG.

► Contact Stiebel-Eltron directly regarding the license.

Note

Only one Stiebel-Eltron heat pump can be connected and visualized per Solar-Log ™.

Additional information

It is recommended to record the consumption of the heat pump with a suitable meter (eg: Solar-Log ™ PRO380), as the heat pump itself does not transmit any consumption values.

This meter, defined as an Sub-consumption meter, can also be assigned to the responsible switching group in order to optimize the surplus determination. The heat pump is thus also visualized in the consumption graphic.

07

Sensors

1 Sensor Basic

Properties

- Sensor element: Crystalline solar cell, 20 mm x 34 mm.
- Measurement range irradiance: 0 - 1400 W/m^{2}.
- Error of max. +/- 2 K at 25 °C cell temperature.
- Sensorelement: KTY83-110.
- Measurement range cell temperature: -25 – +75 °C.
- Error of max. 8 % (FSR) at vertical light beam and under standard test condition (STC).
- Differential data communication.
- Cable prolongable up to 50 m (165 feet).

Sensor Case

Material	Powder-coated aluminum
Mounting Plate	3 mm powder-coated Aluminum with 4 x M8-drill holes
Drill Size (WxHxD)	138 mm x 38 mm x 64 mm (with mounting plate)
Weight	ca. 440 g
Protection Class	IP67
Ambient Temperature	-20 – +70 °C
Temperature Range	-25 – +85 °C
Relative Air Humidity	20 – 95 %

Electronics

Power Supply	8 – 28 Vdc, via RS485 Data Cable from Solar-Log™
Supply Current	Typical 10 mA
Communication Port	RS485
Protocol	Solar-Log™, 9600 Baud, 8N1
Connection Cable	• 4 pole, 3 m (10 feet), weather and uv resistant (LiY(St) 11 Y (4 x 0,14) • prolongable up to 50 m (165 feet)

Instruction for Mounting

Install the irradiance sensor with the same orientation and declination as the PV generator, most suitable in the plane with the pv generator. Choose an unshaded location for the irradiance sensor. To prevent snow on the sensor choose a location sidewise or above, but not below the PV generator. Usually an overlapped mounting trace of the PV generator can be used for mechanical installation of the irradiance sensor. Otherwise use another suitable assembling aid for mechanical installation of the sensor.

Recommended Mounting

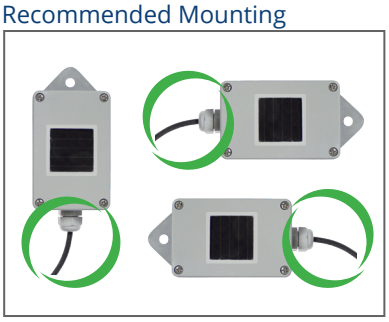

Not allowed

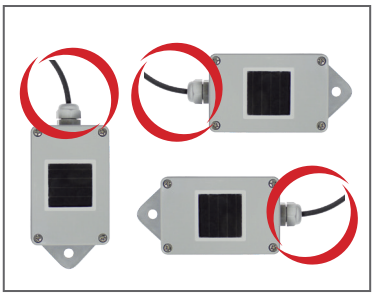

Attention!

Opening the sensor is not necessary for installing the sensor. Opening the sensor will void your warranty!

Cabling for the data line to the Solar-Log™

Attention!

Interchanging the connection cables may result in damage to sensor.

- The connection cable is 4-wire and includes the 12 V power supply and the data line to the Solar-Log™
- No separate power supply is required
- The connection cable can be extended (up to 50 m)., however, at least a voltage of 8 V should be measured at the end of the cable
- The cable must also be suitably protected in outside areas. The cabling in inside areas can consist of a shielded data cable
- The Sensor Basic is connected to a RS485 interface parallel to the inverter bus or to an unused RS485 interface on the Solar-Log™
- The cable shielding must have an equipotential bond
- The four wires in the connection cable must be joined to the 4-pin connector of the Solar-Log™. The wire assignments are printed on the back of the sensor and are made as follows:

Solar-Log™ Base RS485 (A) / (B)	Sensor Basic Cable
Terminal	Pin
► (A) 6 or (B) 10 (Data+)	► Brown Data+
► (A) 7 or (B) 11 (24 V)	► Red +12Vdc (Vcc)
► (A) 8 or (B) 12 GND	► Black 0 V (GND)
► (A) 9 or (B) 13 (Data-)	► Orange Data-

Startup

1. When the Solar-Log™ is switched on, the Sensor Basic is also powered up automatically
2. The Sensor Basic must then be configured on the desired RS485 interface:
3. Use the web interface to access the Solar-Log™ configuration menu.
4. Select "M&T Sensor" for the inverter selection in the Configuration | Devices | Definition | Interfaces menu in the sector Device class | Manufacturer.
5. Carry out the inverter detection. The Sensor Basic is integrated with the system in the same way as an inverter.

2 Sensor Box Professional

2.1 Technical Information

The Sensor Box Professional is equipped with a high-quality monocrystalline solarcell. This very reliable and rugged sensor are designed for longlasting outdoor use (IP65).
The Solar-Log™ continuously compares the production of the PV-Plant with the measurements of the sensor. If the Solar-Log™ detects a definable difference an error message will be generated.

Attention!

Opening the sensor is not necessary and would lead to a loss of guarantee.

2.2 Mechanical Installation Sensor Box Professional

The Sensor Box Professional must be mounted parallel; this means the same adjustment and pitch as the solar-modules, fastened with screws on the substructure. The sensor should be mounted at a place where there are no shadows. A complex mounting of a cell-temperature-sensor is not necessary, it is included within the irradiance sensor.

Recommended Mounting

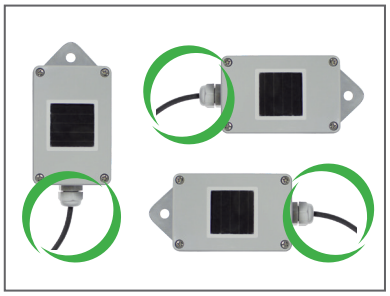

Not allowed

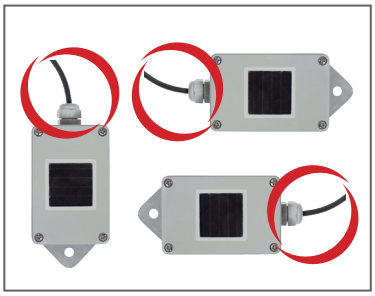

When mounting the sensor, please take care that the cable is mounted as seen in this figure.

2.3 Wiring the Data Cable with the Solar-Log™

The Sensor Box Professional is connected via the RS485 gateway with the Solar-Log™. The 4-core connection cable between the irradiance sensor and the Solar-Log™ is used for data exchange and 12 V power supply. A separate mains adapter is not necessary.

The connection cable can be extended (max 50 m). Please be sure that the supply voltage 10,5 VDC reaches the end of the connection cable. For longer distance please use a cable with bigger wire cross section.

For outdoor use, the connection must be protected in conformity with IP54. For indoor wiring, please use a shielded data cable. The shield of the cable must be connected with a potential equalisation. The 4 wires of the connection cable have to be connected with the Solar-Log™ connection plug.

Warning!

Interchanging the connection cables may result in damage to sensor.

Solar-Log™ Base RS485 (A) / (B)	Sensor Box Professional
Terminal	Pin
► (A) 6 or (B) 10 (Data+)	► Data+ A (brown)
► (A) 7 or (B) 11 (24 V)	► +12V (red)
► (A) 8 or (B) 12 GND	► GND (black)
► (A) 9 or (B) 13 (Data-)	► Data- B (orange)

2.4 Starting Up at the Solar-Log™

By switching-on the Solar-Log™, it will provide power to the Sensor Box Professional. Afterwards, the Sensor Box Professional must be configured to the free RS485-port:

- Open the dialogue Configuration | Devices | Definition | Interfaces in the WEB menu of the Solar-Log™. Please refer to the Installation Manual in chapter “Connecting accessories”, “Installation” and “Configuring connected devices”.
- Select under Devices class „Sensor“ and under Manufacturer „M&T Sensor“.
- Carry out device detection.

The Sensor Box Professional is integrated with the system in the same way as an inverter. The further configuration could be handled with the Solar-Log™ web interface.

2.5 Technical Data

Sensor Box Professional	
Dimensions, weight	W/H/D in mm: 145/85/40, 360 g
Housing	Powder-coated aluminum
Protection mode	IP65
Operating temperature	-20 °C to +70 °C
Power supply	Via RS485 data cable from Solar-Log™ (10,5-28 V_{DC})
Supply Current	Typical 10 mA
Communication Port	RS485
Protocol	Solar-Log™, 9600 Baud, 8N1
Irradiance	Irradiance : ± 5 % (0 W/m2 to 1400 W/m2) Cell-temperature: ± 1K (-20 °C to +70 °C) / ± 2 K (-40 °C to +85 °C)
Installation	with screws on the substructure
Connection cable	• 4 pole, 3 m (10 feet), weather and uv resistant (LiY(St) 11 Y (4 x 0,14) • prolongable up to 50 m (165 feet)
Conformity	CE :DIN EN-61000-6-1:2007 and DIN EN-61000-6-3:2007

3 Sensor Box Professional Plus

3.1 Technical Information

The Sensor Box Professional Plus is equipped with a high-quality monocrystalline solarcell. This very reliable and rugged sensor as well as the component parts are designed for longlasting outdoor use (IP65).
The Solar-Log™ continuously compares the production of the PV-Plant with the measurements of the sensor. If the Solar-Log™ detects a definable difference an error message will be generated.

Attention!

Opening the sensor is not necessary and would lead to a loss of guarantee.

3.2 Mechanical Installation Optional Sensors

The Sensor Box Professional Plus must be mounted parallel; this means the same adjustment and pitch as the solar-modules, fastened with screws on the substructure. The sensor should be mounted at a place where there are no shadows. A complex mounting of a cell-temperature-sensor is not necessary, it is included within the irradiance sensor.

Recommended Mounting

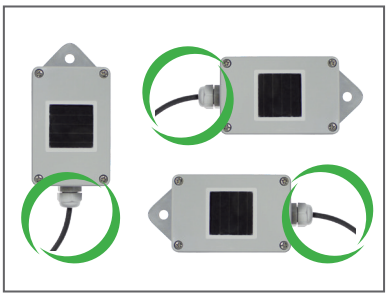

Not allowed

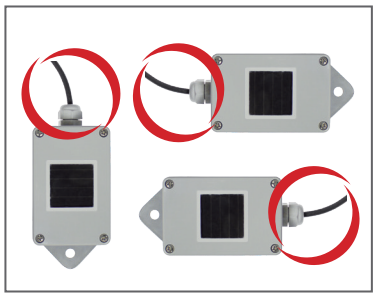

When mounting the sensor, please take care that the cable is mounted as seen in this figure.

3.3 Mechanical Installation Optional Sensors

The temperature sensor should be mounted with a wall bracket at a shadowy location. The 3-pin connector must be screwed into the irradiance sensor.
The wind wheel should be mounted with the mounting angle at the highest and most exposed location. The 2-pin connector must be screwed into the irradiance sensor.

Attention!

The cables of the optional sensors can not be extended. The sensor must be mounted horizontally.

3.4 Wiring the Data Cable with the Solar-Log™

The Sensor Box Professional Plus is connected via the RS485 gateway with the Solar-Log™. The 4-core connection cable between the irradiance sensor and the Solar-Log™ is used for data exchange and 12 V power supply. A separate mains adapter is not necessary.

The connection cable can be extended (max 50 m). Please be sure that the supply voltage 10,5 VDC reaches the end of the connection cable. For longer distance please use a cable with bigger wire cross section.

For outdoor use, the connection must be protected in conformity with IP54. For indoor wiring, please use a shielded data cable. The shield of the cable must be connected with a potential equalisation. The 4 wires of the connection cable have to be connected with the Solar-Log™ connection plug.

Warning!

Interchanging the connection cables may result in damage to sensor.

Solar-Log™ Base RS485 (A) / (B)	Sensor Box Professional Plus
Terminal	Pin
► (A) 6 or (B) 10 (Data+)	► Data+ A (brown)
► (A) 7 or (B) 11 (24 V)	► +12V (red)
► (A) 8 or (B) 12 GND	► GND (black)
► (A) 9 or (B) 13 (Data-)	► Data- B (orange)

3.5 Starting Up at the Solar-Log™

By switching-on the Solar-Log™, it will provide power to the Sensor Box Professional Plus. Afterwards, the Sensor Box Professional Plus must be configured to the free RS485-port:

- Open the dialogue Configuration | Devices | Definition | Interfaces in the WEB menu of the Solar-Log™. Please refer to the Installation Manual in chapter “Connecting accessories”, “Installation” and “Configuring connected devices”.
- Select under Devices class „Sensor“ and under Manufacturer „M&T Sensor“.
- Carry out device detection.

The Sensor Box Professional Plus is integrated with the system in the same way as an inverter. The further configuration could be handled with the Solar-Log™ web interface.

3.6 Technical Data

Sensor Box Professional Plus	
Dimensions, weight	W/H/D in mm: 145/85/40, 360 g
Housing	Powder-coated aluminum
Protection mode	IP65
Operating temperature	-20 °C to +70 °C
Power supply	Via RS485 data cable from Solar-Log™ (10,5-28 VDC),
Supply current	Typical 10 mA
Communication Port	RS485
Protocol	Solar-Log™, 9600 Baud, 8N1
Irradiance	Irradiance : ± 5 % (0 W/m2 to 1400 W/m2) Cell-temperature: ± 1K (-20 °C to +70 °C) / ± 2 K (-40 °C to +85 °C)
Installation	with screws on the substructure
Connection cable	• 4 pole, 3 m (10 feet), weather and uv resistant (LiY(St) 11 Y (4 x 0,14) • prolongable up to 50 m (165 feet)
Conformity	CE :DIN EN-61000-6-1:2007 and DIN EN-61000-6-3:2007

4 Seven Sensor - 3S-IS

4.1 Technical description

The 3S-IS irradiation sensor acts as a hub for multiple sensors and is designed for use in industrial, commercial, and large-scale photovoltaic systems. All measured meteorological data is transmitted to the Solar-Log™ via Modbus RTU protocol.

4.2 Available sensors and supported models

The following sensors are included in the scope of delivery:

- Humidity sensor
- Ambient temperature sensor
- Wind speed sensor
- Wind direction sensor

The following models are supported: 3S-IS, 3S-IS-1, 3S-IS-2, 3S-IS-2T, 3S-IS-3, 3S-IS-4

4.3 Wiring / Detection with Solar-Log™

The irradiation sensor is connected via the RS485 interface on the Solar-Log™. The connection cable between the irradiation sensor and Solar-Log™ is 3-wire.
A separate power supply unit is required (please contact the manufacturer for this).

Solar-Log™ Base RS485 (A) / (B)	Seven Sensor - 3S-IS
Terminal	Pin
► (A) 6 or (B) 10 (Data+)	► Data+ A (Green)
► (A) 8 or (B) 12 GND	► GND (Pink)
► (A) 9 or (B) 13 (Data-)	► Data- B (Yellow)

Detection via the Solar-Log™ WEB Interface

- For detection on the Solar-Log™, select under item Configuration | Devices | Definition | Interface via the plus symbol, select the device class „Charger“ and then the manufacturer „Seven Sensor“. Confirm your selection by clicking OK.
- Save your selections and then start the Device Detection under Configuration | Device | Detection.

Note

The Modbus RTU protocol is used. The following parameters can be set:

- Baud: 4800, 9600, 19200, 38400
- Parity: None, Even, Odd
- Stop Bit: 1, 2 (only if parity is None)
- Default: 9600, 8N1, adress: 1

08

Pyranometer

1 Kipp & Zonen - Pyranometer

1.1 Kipp & Zonen - Pyranometer

Termination	Addressing	Interface
Yes	No	RS485

Select „Kipp & Zonen“ during the device detection.

Supported models:

- SMP3
- SMP11

Overview

- Integrated interface.
- Where to connect: Round socket on the bottom.
- Communication address must be allocated.
- 4-pin wiring.
- Installation steps:
  - Switch off the pyranometer and the Solar-Log™.
  - Connect the pyranometer to the Solar-Log™.

The wiring is done using a

- ready-made data cable (supplied with the pyranometer).

Pin assignment:

Solar-Log™ Base RS485 (A) / (B)	X4 socket RS485-1 pyranometer
Terminal	PIN
► (A) 6 or (B) 10 (Data+)	► 4 - B / + (yellow)
► (A) 7 or (B) 11 (24 V)	► 7 - 12 V (white)
► (A) 8 or (B) 12 GND	► 8 - Ground / GND (black)
► (A) 9 or (B) 13 (Data-)	► 5 - A / - (gray)

Termination:

Please contact Kipp & Zonen for information on termination.

Note

Only one pyranometer can be connected and visualized per Solar-Log™ device.

Note

Check and/or set the following parameters according to the manufacturer's instructions:
Baud rate: 19200, Data bits: 8, parity: even, parity bit: 1.

2 Lufft - Pyranometer

2.1 Lufft - Pyranometer

Termination	Addressing	Interface
-	No	RS485

Select „Lufft“ during the device detection.

Supported Models:

- WS 501 UMB
- WS 503

Overview

- Integrated interface.
- Where to connect: Round socket on the bottom.
- Communication address does not have to be assigned.
- 4-pin wiring.
- Installation steps:
  - Switch off the pyranometer and the Solar-Log™.
  - Connect the pyranometer to the Solar-Log™.

The wiring is done using a

- self-made, shielded 4-wire data cable with a terminal block connector.

Procedure

1. If you are making the cable yourself, connect the wires as shown in the following diagram:

Solar-Log™ Base RS485 (A) / (B)	X4 socket RS485-1 pyranometer
Terminal	PIN
► (A) 6 or (B) 10 (Data+)	► RS485 A (green)
► (A) 7 or (B) 11 (24 V)	► Positive voltage supply (brown)
► (A) 8 or (B) 12 GND	► Ground (GND) (white)
► (A) 9 or (B) 13 (Data-)	► RS485 B (yellow)

Termination:

Please contact Lufft for information on termination.

Note

Only one pyranometer can be connected and visualized per Solar-Log™ device.

Note

Check and/or set the following parameters according to the manufacturer's instructions:
Baud rate: 19200, Data bits: 8, parity: none, Stop bits: none, select UMB binary protocol and device ID: 1

3 Rainwise - PVMet™-200 (Weather station)

3.1 PVMet™-200 (Weather station)

Termination	Addressing	Interface
-*	No	RS485

Select „Sensor/Rainwise/PVMet200“ during the device detection.

Overview

- Integrated interface.
- Where to connect: Terminal strip on circuit board under the cover.
- Communication address does not have to be assigned.
- 4-pin wiring.
- Installation steps:
  - Switch of the PVMet™-200 and the Solar-Log™.
  - Connect the PVMet™-200 to the Solar-Log™.

Connect the PVMet™-200 to the Solar-Log™.

The wiring is done using a

- self-made, shielded 4-wire data cable with a terminal block connector.

Procedure

1. If you are making the cable yourself, connect the wires as shown in the following diagram:

Solar-Log™ Base RS485 (A) / (B)	Terminal strip on circuit board
Terminal	PIN
► (A) 6 or (B) 10 (Data+)	► RS485 A-
► (A) 8 or (B) 12 GND	► Ground/GND
► (A) 9 or (B) 13 (Data-)	► RS485 B+

*Termination:
Please contact Rainwise for information on termination.

Note

Only one PVMet™ -200 can be connected and visualized per Solar-Log™ device.

Note

The device has to be operate in Modbus mode (default) so that the PVMet™ 200 (weather station) can communicate with the Solar-Log™. (Parameter settings according to the manufacturer's instructions).

Note

The bus address of the Rainwise PVMet™ 200 is set to 60 by default.

Note

Check and/or set the following parameters according to the manufacturer's instructions:
Baud rate: Baud rate 9600, Data bits: 8, Parity: none, Stop bits: 1.

Note

The maximum bus length is 1200 meters.

09

Smart Plug components

1 Allnet Network Power Socket

1.1 Allnet Network Power Socket

Allnet network power sockets can switch connect electronic devices on and off. These switching operations can be set manual, time-controlled or based on consumption levels. Allnet network power sockets can be integrated into the local network with a LAN cable connection. Follow the following steps
to be able to use these functions with the Solar-Log™:

Supported Models:

- Allnet - 3000RF (Select „Allnet: 3000RF“ during device detection)
- Allnet - 3073 (Select „Allnet: 3073“ during device detection)
- Allnet - 3075, 3076 (Select „Allnet: 3075/3076“ during device detection)
- Allnet - 3075V2, 3076V2 (Select „Allnet: 3075/3076V2“ during device detection)
- Allnet - 3075V3 (Select „Allnet: 3075V3“ during device detection)

Procedure:

1. Connect the Allnet socket to a laptop or PC with a LAN cable and plug the Allnet device into a power socket.
2. Click on Control Panel.
3. and then go to the Network and Sharing Center (for other operating systems, refer to the instructions for setting the IP address).
4. Click on Local Area Connection to open the Status window and then click on Properties.
5. Select the Internet Protocol Version 4 (TCP/IPv4) and then click on Properties.

Important!
Note the displayed values before you change them because you will need them again later.

6. Adjust the displayed values as follows (using the following IP address):
   IP address: 192.168.0.101
   Subnet mask: 255.255.255.0
   Gateway: 0.0.0.0
   Confirm the settings with „OK.“
7. Enter the IP address 192.168.0.100 as the URL in your browser to access the Allnet menu.
8. Click on settings and go to Configuration | LAN Settings.
9. Configure a separate IP address for every Allnet network power socket. The new IP address need to match the range for the existing network (refer to your computer‘s original settings).
   For example, if our computer‘s original IP address was 192.168.178.2 and the next address is free, the Allnet network power sockets would start with192.168.178.3 and continue. The Subnet mask is 255.255.255.0 by default and must be the same for every device in the subnet. The gateway is typically the IP address of the router or switch to which the computer is connected again later. Save the settings when they are completed.
10. After adjusting the networks settings for the network power sockets, change the values for your computer‘s networking settings back to the original values.
11. The configuration is then finished.

Note

ALL3075v3:
To ensure functionality with the Solar-Log™, the ALL3075v3 still has to be set to remote control in the Allnet network socket configuration.

Connecting the Allnet network power socket to the Solar-Log™

The Allnet socket has to be defined with the device detection function to connect to the Solar-Log™. From the WEB interface of the Solar-Log™ go to Configuration | Devices | Definition and select the device class „Switch“ with the blue plus symbol and then Allnet as the manufacturer followed by the type and number of devices. Confirm the selection with OK and start the detection from the Configuration | Devices | Detection menu. Let the detection process run completely. After that, select the corresponding devices from the Configuration | Devices | Configuration menu, enter the IP address and perform the rest of the setup. Click on save once everything is finished.

The last step is configuring the Smart Energy Logics. Refer to the Solar-Log ™ Smart Energy Manual for more informatin. It is available from our website (https://www.solar-log.com/en/support/downloads/manuals/).

2 Smart Relay Station V2

2.1 Smart Relay Station V2

Refer to the Smart Relay Station PDF on our for website for more details: https://www.solar-log.com/en/support/downloads/manuals/.

3 Solar-Log™ Smart Relay Box

3.1 Solar-Log™ Smart Relay Box

The Smart Relay Box makes it possible to switch 8 relays via the Smart Energy control logic depending on the current production (surplus).

The Relay Box has:

- 4 inverter contacts
- 4 make contacts

Characteristics of the relays:

Maximum current load:

0.5 A @ 120 V_{AC}

0.25 A @ 240 V_{AC}

1 A @ 30V_{DC}

0.3 A @ 110V_{DC}

Procedure:

1. Connect the Relay Box to the RS485 bus of the Solar-Log™ according to the following diagram:

Relay Box Wiring

Solar-Log™ Base RS485 (A) / (B)	Relay Box Terminal block connector Article Number: 255656
Terminal	PIN
► (A) 6 oder (B) 10 (Data+)	► Data + (Y)
► (A) 9 oder (B) 13 (Data-)	► Data - (G)

2. Device detection is not necessary for this device.
3. The device only has to be selected from the Configuration | Smart Energy menu to be activated.
4. The power comes from the top-hat-rail power supply that was included with the Relay Box.

Power supply Relay Box

DIN rail power supply unit	Relay Box Terminal block connector
► DC+	► +Vs (R)
► DC-	► GND 10 (B)

Note

The Relay Box has to be defined and activated as a switch in the Configuration | Devices | Definition | Interfaces with the plus symbol to be able to configure it.

Note

The Solar-Log™ Smart Relay Box cannot be connected together with inverters on an RS485 interface. The Relay Box requires its own separate RS485 bus. It is possible to combine the Utility Meter with sensors.

Note

The Solar-Log™ Smart Relay Box cannot be connected together with PM packages on a Solar-Log™.

Relay output assignments

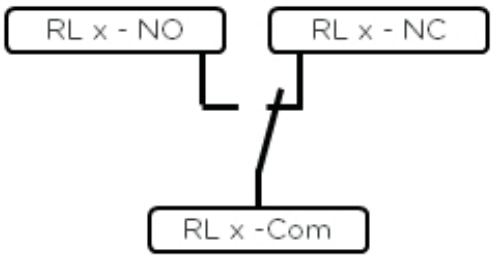

Fig.: Smart Relay Box relay output (change-over contact) diagram

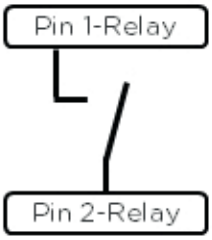

Fig.: Smart Relay Box relay output (make contact) diagram

4 WeMo Insight Switch

4.1 WeMo Insight Switch

With the WeMo Insight Switch, home appliances and electronic devices can be connected to a Wi-Fi network, allowing the devices to be remotely turned on and off. The Wemo Insight Switch can also monitor the devices and will send information about the device's energy usage directly to your smartphone or tablet. Follow the subsequent instructions to be able to use these functions with the Solar-Log™.

Procedure:

1. Connect a desktop/laptop and the Solar-Log™ to the router with a LAN cable.
2. Download the WeMo app to your smartphone or tablet.
3. Reset the WeMo Insight Switch (press the reset button for 5 seconds while turning on the power for the WeMo Insight Switch).
4. The WeMo searches for the smartphone or tablet via WiFi.
5. Start the WeMe app and connect the WeMo Insight Switch to the router's WiFi network.
6. Connect to the Solar-Log™'s WEB interface with the desktop/laptop and go to the Configuration | Devices | Definition menu.
7. Select the device class „Switch" with the +plus button.
8. Select „Belkin" as the manufacturer and „WeMo Insight" as the type. Enter the number of devices and click on save.
9. Then start the device detection from the Configuration | Devices | Detection menu.
10. The connection is now established.

Note

A direct connection between the Solar-Log™ WiFi and WeMo is not possible. The Solar-Log™ has to be connected to a router via a LAN cable or to be in a network.

The last step is configuring the Smart Energy Logics. Refer to the Solar-Log ™ Smart Energy Manual for more informatin. It is available from our website (https://www.solar-log.com/en/support/downloads/manuals/).

10

EV charger

1 ChargeX Aqueduct - EV charger

1.1 ChargeX Aqueduct - EV charger

Termination	Addressing	Interface
No	Yes	Ethernet

Select „ChargeX“ during the device detection.

Supported series:

- Aqueduct

Overview

- Connected using network cable (patch cable) and Ethernet router or switch.
- Installation steps:
  - Connect the first start module with switch or Ethernet router.
  - Connect the communication cables of the expansion modules in series with the start module.
  - Connect the Solar-Log™ to a switch or Ethernet router.
- Check correct assignment of IP address and adjust if necessary.

Assign IP address (if necessary)

- Perform IP address configuration according to the manufacturer‘s instructions.
- The IP address of the ChargeX EV charger must be in the same subnet as the Solar-Log™.

Detection via the Solar-Log™ WEB Interface

- For detection on the Solar-Log™, select under item Configuration | Devices | Definition | Interface via the plus symbol, select the device class „Charger“ and then the manufacturer „ChargeX“. Confirm your selection by clicking OK.
- Save your selections and then start the Device Detection under Configuration | Device | Detection.

Note

Further charging modules are connected to the first EV charger according to the manufacturer‘s instructions.

2 Keba - EV charger

2.1 Keba - EV charger (KeContact P20 / P30)

Termination	Addressing	Interface
No	Yes	Ethernet

Select „Keba: P20/30“ during the device detection.

Supported models:

- KeContact P20
  - c series
  - x series
- KeContact P30
  - c series (+ Green Edition)
  - x series

Overview

- Connected using network cable (patch cable) and Ethernet router or switch.
- Installation steps:
  - Connect the Keba EV charger to a switch or Ethernet router.
  - Connect the Solar-Log™ to a switch or Ethernet router.

Assigning IP addresses

- Configure the address according to the manufacturer‘s manual.
- The DHCP range (IP address) for the Keba EV charger has to be in the same subnet as the Solar-Log™.
- The charging station always obtains its IP address via DHCP. That is why the router for the EV charger must always assign the same IP address (static). (Refer to the router‘s manual).

Detection via the Solar-Log™ WEB Interface

- For detection on the Solar-Log™, select under item Configuration | Devices | Definition | Interface via the plus symbol, select the device class „Charger“ and then the manufacturer „Keba“. Confirm your selection by clicking OK.
- Save your selections and then start the Device Detection under Configuration | Device | Detection.

Note

Adjust the DIP switches on the Keba EV charger as follows so that it receives the commands from the Solar-Log™:

► DSW1.1: OFF (X1 deactivated).

► DSW1.3: ON (UDP activated).

DIP switch - DSW2.1-2.: IP settings (refer to the Keba manual).

Note

To ensure permanent communication between Solar-Log™ and the KEBA EV charger, the KEBA EV charger must be assigned a fixed IP address in the router.

Note KEBA EV charger and Smart Energy

The Smart Energy function can be used to control a KEBA EV charger and to prioritize up to 6 KEBA EV charger.

3 Mennekes - EV charger

3.1 Mennekes - EV charger

Termination	Addressing	Interface
No	Yes	Ethernet

Select „Mennekes“ during the device detection.

Supported models:

AMTRON® Charge Control 11, AMTRON® Charge Control 11 C2
AMTRON® Professional 22, AMTRON® Professional+ 22
AMTRON® Professional 22 ativo, AMTRON® Professional+ 22 ativo
AMTRON® Professional 22 C2, AMTRON® Professional+ 22 C2
AMTRON® Professional 22 C2 ativo, AMTRON® Professional+ 22 C2 ativo
AMTRON® Professional PnC 22, AMTRON® Professional+ PnC 22
AMTRON® Professional PnC 22 ativo, AMTRON® Professional+ PnC 22 ativo
AMTRON® Professional PnC 22 C2, AMTRON® Professional+ PnC 22 C2
AMTRON® Professional PnC 22 C2 ativo, AMTRON® Professional+ PnC 22 C2 ativo
AMTRON® Professional TCX 22, AMTRON® Professional+ TCX 22
AMTRON® Professional TCX 22 ativo, AMTRON® Professional+ TCX 22 ativo
AMTRON® Professional TCX PnC 22, AMTRON® Professional+ TCX PnC 22
AMTRON® Professional TCX PnC 22 ativo, AMTRON® Professional+ TCX PnC 22 ativo
AMEDIO® Professional 22, AMEDIO® Professional+ 22
AMEDIO® Professional 22 ativo, AMEDIO® Professional+ 22 ativo
AMEDIO® Professional PnC 22, AMEDIO® Professional+ PnC 22
AMEDIO® Professional PnC 22 ativo, AMEDIO® Professional+ PnC 22 ativo

Connection AMTRON

- Install and connect the ECU according to the manufacturer‘s instructions.
- Retrofit kit (USB Ethernet adapter) for networking must be installed. (See the manufacturer‘s installation instructions)
- Installation steps:
  - Connect the Solar-Log™ to the ECU of the AMTRON charging station. To do this, use the Ethernet connection on the USB-Ethernet connection (see manufacturer‘s instructions).
  - Connect the AMTRON charging station to the switch or Ethernet router.
  - Connect the Solar-Log™ to the switch or Ethernet router.
- Check correct assignment of IP address and adjust if necessary.
- Carry out configuration of the AMTRON. To do this, log in as operator via the local web interface of the charging station. (See manufacturer‘s instructions)

Connection AMEDIO

- Install and connect the ECU according to the manufacturer's instructions.
- Installation steps:
  - Connect the Solar-Log™ to the ECU of the AMTRON charging station. To do this, use the Ethernet connection on the USB-Ethernet connection (see manufacturer's instructions).
  - Connect the AMTRON charging station to the switch or Ethernet router.
  - Connect the Solar-Log™ to the switch or Ethernet router.
- Check correct assignment of IP address and adjust if necessary.
- Carry out configuration of the AMTRON. To do this, log in as operator via the local web interface of the charging station. (See manufacturer's instructions)

IP address

- The IP address of the Mennekes charging station must be in the same subnet as the Solar-Log™.
  Example: Solar-Log™ has 192.168.178.49
- In this case, the Mennekes charging station must have an IP address from the range 192.168.178.xxx (xxx stands for a number between 1 - 254).
- Carry out the IP address configuration according to the manufacturer's instructions.



Note

If several charging stations are to be connected to each other, they must be connected to a central router or switch via an Ethernet cable (max. 100 m long).
The connection must be made in a star topology.



Note on power management

To be able to carry out power management, the interface (Modbus TCP server) for power management systems must first be activated. This is activated via the web interface of the charging station. (Please follow the manufacturer's instructions!)

Detection via the Solar-Log™ WEB Interface

- For detection on the Solar-Log™, select under item
  Configuration | Devices | Definition | Interface via the plus symbol, select the device class „Charger" and then the manufacturer „Mennekes". Confirm your selection by clicking OK.
- Save your selections and then start the Device Detection under Configuration | Device | Detection.

4 Weidmüller - Wallbox

4.1 Weidmüller - Wallbox

Termination	Addressing	Interface
No	Yes	Ethernet

Select „Weidmüller“ during the device detection.

Supported models:

- AC SMART ADVANCED
- AC SMART VALUE
- AC SMART ECO

Overview

- Wiring via network cable (patch cable) and Ethernet router or switch.
- Installation steps:
  - Connect the Weidmüller wallbox to the switch or Ethernet router.
  - Connect the Solar-Log™ to the switch or Ethernet router.

IP address

- The IP address of the Weidmüller wallbox must be in the same subnet as the Solar-Log™.
  Example: Solar-Log™ has 192.168.178.49
  In this case, the Weidmüller wallbox must have an IP address from the range 192.168.178.xxx (xxx stands for a number between 1 - 254).
- Carry out the IP address configuration according to the manufacturer's instructions.
- The IP address can also be assigned dynamically, but must be activated beforehand, as this is deactivated at the factory.

Detection via the Solar-Log™ WEB Interface

- For detection on the Solar-Log™, select under item
  Configuration | Devices | Definition | Interface via the plus symbol, select the device class „Charger“ and then the manufacturer „Weidmüller“. Confirm your selection by clicking OK.
- Save your selections and then start the Device Detection under Configuration | Device | Detection.

Note

Either the integrated web server or the AC SMART app can be used to operate and configure the AC SMART wallboxes from Weidmüller.

Note

In order for the Weidmüller wallbox to work correctly with the Solar-Log, the wallbox must be defined as a satellite box via the integrated web server.
To do this, activate the “Satellite” option under “General” in the “Load Management” menu item and confirm this with “Save”.

Note

DHCP is deactivated for the wallbox by default and must be activated if required. The factory default IP address of the wallbox is: 192.168.0.8

Note

Several wallboxes can be networked together in a so-called charging network, whereby the first wallbox is the control box and the following wallboxes are the satellite boxes.

Important note on load/charge management!

Integrated load/charge management (static) can only be carried out with the VALUE and ADVANCED devices.
Integrated load/charge management (dynamic) can only be carried out with the ADVANCED devices.

Very important note regarding charging!

Only 3-phase charging is supported.

11

Large External Displays

1 Large External Displays

1.1 General information

Large external displays can be connected to the Solar-Log™ Base via the RS485 interface:
Cable lengths can be up to 1000 meters and the data which is displayed on the Solar-Log™ can specified.

Note

It is not possible to connect a large external display on the RS422 interface.

Note

If inverters that use the RS422 connection are connected to this interface (e.g. Fronius, AEG, Riello), then it is not possible to connect a display.

1.2 Schneider Displaytechnik

Connection vis RS485 interface

Wiring for displays made by Schneider Displaytechnik

The wiring consists of a 3-pin control cable, (3 × 0.5 mm²) and terminal block connector.

Schneider Large displays

Solar-Log™ Base RS485 A/B		Terminal block connector Schneider Display
PIN Interface A	PIN Interface B	Assignment
6 (Data +)	10 (Data +)	A
8 (GND)	12 (GND)	GND
9 (Data -)	13 (Data -)	B

Further information about the connection can be obtained from the manufacturer of the display.

1.3 RiCo Electronic

Connection vis RS485 interface

Wiring for displays from RiCo Electronic

The wiring consists of a 2-pin control cable, (2 × 0.5 mm²) and terminal block connector.

RiCo Large displays

Solar-Log™ Base RS485 A/B		Terminal block connector RiCo Display
PIN Interface A	PIN Interface B	Assignment
6 (Data +)	10 (Data +)	Pin 1 - Data +
9 (Data -)	13 (Data -)	Pin 2 - Data -

Further information about the connection can be obtained from the manufacturer of the display.

List of figures

Fig.: RJ45 plug pin assignments ... 31
Fig.: RJ11 plug pin assignments ... 32
Fig.: Solar-Log™ Base Example of a bus topology ... 33
Fig.: Albatech APL block connector (Source: Albatech) ... 61
Fig.: Gefran RS485 terminal strip and termination (Source: Gefran) ... 164
Fig.: 2-pin terminal TB3 (Source: Gefran) ... 165
Fig.: Terminal block in the inverter (Source: Ginlong) ... 175
Fig.: Terminal block in the inverter (Source: Growatt) ... 192
Fig.: Terminal block Port 1 and Port 2 (Source: Growatt) ... 192
Fig.: Siemens – connecting inverters together (Source: Siemens) ... 363
Fig.: Control board before and after installation of the piggyback (Source: SMA) ... 372
Fig.: Piggyback - insert jumper (Source: SMA) ... 373
Fig.: Jumper SMA (Source: SMA) ... 374
Fig.: Jumper SMA (Source: SMA) ... 376
Fig.: Jumper SMA (Source: SMA) ... 377
Fig.: Control board before and after installation of the piggyback (Source: SMA) ... 457
Fig.: Piggyback - insert jumper (Source: SMA) ... 458
Fig.: Jumper SMA (Source: SMA) ... 459
Fig.: Jumper SMA (Source: SMA) ... 461
Fig.: Jumper SMA (Source: SMA) ... 461
Fig.: SMA mixed wiring (Source: SMA) ... 501
Fig.: Interconnection of Kaco Powador inverters (Source: Kaco) ... 502
Fig.: Wiring diagram to record self-consumption. (optional with battery storage) ... 577
Fig.: Wiring diagram for recording self-consumption – bi-directional meter. (optional with battery storage) ... 578
Fig.: Pin assignment ... 580
Fig.: Pin assignment ... 583
Fig.: Pin assignment ... 586
Fig.: Pin assignment ... 590
Fig.: Example - UMG 104 Utility Meter connection diagram for voltage measurements in low-voltage power grids (Source: Janitza) ... 605
Fig.: Example - UMG 104 Utility Meter connection diagram for current measurements with current transformers ... 606
Fig.: Connection example „Supply voltage“ (Source: Janitza) ... 612
Fig.: Connection example „Current measurement via current transformer“ (Source: Janitza) ... 612
Fig.: Connection example for voltage measurement. (Source: Janitza) ... 613
Fig.: Connection example „Supply voltage“ (Source: Janitza) ... 618
Fig.: Connection example „Current measurement via current transformer“ (Source: Janitza) ... 618
Fig.: Connection example for voltage measurement. (Source: Janitza) ... 619
Fig.: Pin assignment (Source: Larsen & Toubro) ... 623
Fig.: Smart Relay Box relay output (change-over contact) diagram ... 677
Fig.: Smart Relay Box relay output (make contact) diagram ... 677

Solar-Log GmbH
Fuhrmannstraße 9
72351 Geislingen-Binsdorf
Germany
Tel: +49 (0)7428/4089-300
www.solar-log.com
www.solarlog-web.com

The copyright of these instructions remains with the manufacturer. No part of these instructions may be may be reproduced in any form or processed, duplicated or distributed using electronic systems without the written consent of Solar-Log GmbH.
Subject to change without notice.
Solar-Log GmbH does not guarantee the accuracy, timeliness and completeness of the information provided and expressly disclaims any liability for errors or omissions in this information.
Non-compliance resulting in contradiction of the above-mentioned specifications shall result in obligation to provide compensation for damages.
All brands and trademarks contained in this manual are the sole property of the respective manufacturer, which we respect and recognize herewith. The trademark "Speedwire" is registered trademark of SMA Solar Technology AG in many countries.
Solar-Log GmbH assume nos liability for printing errors.

EN | 08.2026 | Version 6.x_V1.79 | SolarLog_Components_connection_manual_EN

Solar-Log™