SUNGROW
Clean power for all

System Manual

PV Grid-Connected Inverter

SG1100UD/SG1100UD-20/SG1100UD-21/SG2200UD/
SG2200UD-20/SG2200UD-21/SG3300UD/SG3300UD-20/
SG3300UD-21/SG4400UD/SG4400UD-20/SG4400UD-21



SG1100_2200_3300_4400UD_20_21-SEN-Ver13-202210

All Rights Reserved

All Rights Reserved

No part of this document can be reproduced in any form or by any means without the prior written permission of Sungrow Power Supply Co., Ltd (hereinafter "SUNGROW").

Trademarks

SUNGROW and other Sungrow trademarks used in this manual are owned by SUNGROW.

All other trademarks or registered trademarks mentioned in this manual are owned by their respective owners.

Software Licenses

- It is prohibited to use data contained in firmware or software developed by SUNGROW, in part or in full, for commercial purposes by any means.
- It is prohibited to perform reverse engineering, cracking, or any other operations that compromise the original program design of the software developed by SUNGROW.

Contents

All Rights Reserved I
1 About This Manual 1
1.1 Validity 1
1.2 Target Group 1
1.3 How to Use This Manual 1
1.4 Symbol Explanations 2
1.5 Explanation of Description 2
2 Safety Instructions 3
2.1 Unpacking and Inspection 3
2.2 Hoisting and Transportation 4
2.3 Electrical Connection 4
2.4 Operation 6
2.5 Operation and Maintenance 6
2.6 Disposal 8
3 Product Description 9
3.1 Product Introduction 9
3.2 Product Composition 9
3.3 Main Internal Equipment 10
3.3.1 Main Parts of Inverter Unit 10
3.3.2 LED Indicator 11
3.3.3 Internal Structure of Inverter Unit 12
3.4 Symbol on Products 13
4 Transport and Storage 14
4.1 Precautions 14
4.2 Transportation Requirements 14
4.3 Storage Requirements 14
5 Mechanical Mounting 16
5.1 Safety Precautions 16
5.2 Inspection Before Installation 17
5.2.1 Scope of Delivery 17
5.2.2 Product Inspection 18

5.3 Installation Environment Requirements 18
5.3.1 Installation Site 18
5.3.2 Foundation 18
5.3.3 Installation Spacing 19
5.4 Hoisting and Fixing 20
5.4.1 Preparation Before Hoisting 20
5.4.2 Crane and Hoisting Ropes Requirements 20
5.4.3 During Hoisting 20
5.4.4 Fixing 21
6 Electrical Connection 23
6.1 Precautions 23
6.2 Wiring Overview 25
6.3 Preparation Before Wiring 25
6.3.1 Installation Tools 25
6.3.2 Open the Product Door 26
6.3.3 Cables 27
6.3.4 Position of Cable Inlet 27
6.4 Ground Connection 28
6.4.1 Overview 29
6.4.2 Grounding Flat Steel 29
6.4.3 Grounding Cable 29
6.5 DC Input Connection 30
6.5.1 Overview 30
6.5.2 Procedure 33
6.6 AC Side Connection 36
6.6.1 Inspection Before Wiring 36
6.6.2 AC Connection Area on the Bottom 36
6.6.3 AC Connection Area at the Side 37
6.7 Communication Connection 38
6.7.1 Overview 38
6.7.2 Procedure 39
6.8 Ethernet Communication 39
6.9 Check After Wiring 40
6.9.1 Inspection 40
6.9.2 Locking Cabinet Door 40
7 Powering up and Powering down 41

7.1 Safety Instructions 41
7.2 Powering Up Operations 41
7.2.1 Removing Film on Product 41
7.2.2 Removing Pressure Relief Screw 42
7.2.3 Installing Fuse in AC SPD 42
7.3 Inspection Before Powering Up 43
7.3.1 Inverter 43
7.3.2 PV Array 43
7.3.3 Checking Grid Voltage 43
7.4 Powering Up Steps 44
7.5 Powering Down Operations 44
7.5.1 Planned Powering Down 44
7.5.2 Unplanned (Emergency) Powering Down 44
8 WEB Operation 46
8.1 Communications Diagram 46
8.2 Preparation Before Login 47
8.2.1 Login (PC) 47
8.2.2 Login (Mobile Device) 47
8.3 Login Steps 47
8.4 Interface Introduction 48
8.4.1 Homepage 48
8.4.2 Viewing Fault Information 48
8.4.3 Viewing Alarm Information 49
8.4.4 Boot/Shutdown 49
8.4.5 Setting Initial Parameters 49
8.4.6 Setting Operation Parameters 49
8.4.7 Setting System Parameters 50
8.4.8 Setting Protection Parameters 50
8.5 Modifying Password 50
8.6 Logout 50
9 LCD Menu Operation (Optional) 51
9.1 LCD TouchScreen 51
9.2 Default Screen 51
9.2.1 Initialization 51
9.2.2 Default Screen Introduction 51
9.2.3 Backlight and Screensaver 52
9.3 Overview of Submenu and Icon 52

9.4 Setting Language 52
9.5 Setting Control Mode 53
10 Troubleshooting 54
10.1 Inverter Troubleshooting 54
10.1.1 Viewing Fault/Alarm Information 54
10.1.2 Check Method 54
10.2 Other Faults 66
11 Routine Maintenance 68
11.1 Safety Instructions 68
11.2 Maintenance Period 70
11.2.1 Maintenance (Every two years) 70
11.2.2 Maintenance (Once A Year) 71
11.2.3 Maintenance (Every half a year to once a year) 72
11.3 Common Maintenance Items 73
11.3.1 Cleaning Higher Air Inlet and Outlet 73
11.3.2 Cleaning Lower Air Inlet and Outlet 74
11.3.3 Appearance Repair 75
11.3.4 Checking Door Locks and Hinges 78
11.3.5 Checking Sealing Strips 78
11.4 Replacing DC Side Fuse 78
11.4.1 Preparation Before Replacing DC Side Fuse 78
11.4.2 Procedure 78
12 Appendix 79
12.1 Technical Parameters 79
12.2 Tightening Torques 88
12.3 Quality Assurance 88
12.4 Contact Information 89

1 About This Manual

This manual describes the transportation and storage, mechanical installation, electrical connection, power up and shutdown, web operation, troubleshooting, and maintenance of the MV grid-connected inverter.

1.1 Validity

This manual applies to the following models:

- SG1100UD / SG1100UD-20 / SG1100UD-21
- SG2200UD / SG2200UD-20 / SG2200UD-21
- SG3300UD / SG3300UD-20 / SG3300UD-21
- SG4400UD / SG4400UD-20 / SG4400UD-21

Unless otherwise specified, this manual takes SG4400UD as an example to briefly introduce the installation and operation methods of the product.

1.2 Target Group

This manual is intended for professional technicians who are responsible for the installation, operation, and maintenance of MV grid-connected inverters. The professional technician is required to meet the following requirements:

- Know electronic, electrical wiring, and mechanical expertise, and be familiar with electrical and mechanical schematics.
- Should be familiar with the composition and working principles of the PV system and its front- and rear-level equipment.
- Have received professional training related to the installation and commissioning of electrical equipment.
- Be able to quickly respond to hazards or emergencies that occur during installation and commissioning.
- Be familiar with the relevant standards and specifications of the country/region where the project is located.

1.3 How to Use This Manual

Please read this manual carefully before using the product and keep it properly at a place for easy access.

The products and product manuals are always in the process of improvement and upgrade. If the manual received is slightly inconsistent with the product, it may be a result of a product

version upgrade, and the actual product shall prevail. For any questions, please contact Sungrow Customer Service.

1.4 Symbol Explanations

To ensure the safety of the users and their properties when they use the product and to make sure that the product is used optimally and efficiently, this manual provides users with the relevant safety information which is marked by the following symbols. The symbols that may be used in this manual are listed below. Please read carefully to make better use of this manual.

DANGER

DANGER indicates high-risk potential hazards that, if not avoided, may lead to death or serious injury.

WARNING

WARNING indicates moderate-risk potential hazards that, if not avoided, may lead to death or serious injury.

CAUTION

CAUTION indicates a slightly hazardous situation which, if not avoided, may result in minor or moderate injury.

NOTICE

NOTICE indicates potential risks that, if not avoided, may lead to device malfunctions or financial losses.

NOTE indicates additional information, emphasized contents or tips to help you solve problems or save time.

1.5 Explanation of Description

Type	Example
Select a menuitem	Select **Device Monitoring** in the navigation bar
Select multiple menus	Select **Device Monitoring** → **Real-time Status**
Select a button	Click **Save**

2 Safety Instructions

When installing, commissioning, operating, and maintaining the product, strictly observe the labels on the product and the safety requirements in the manual. Incorrect operation or work may cause:

- Injury or death to the operator or a third party.
- Damage to the product and other properties.

- The safety instructions in this manual are only supplements and cannot cover all the precautions that should be followed. Perform operations considering actual onsite conditions.
- SUNGROW shall not be held liable for any damage caused by violation of general safety operation requirements, general safety standards, or any safety instruction in this manual.
- When installing, operating, and maintaining the product, comply with local laws and regulations. The safety precautions in this manual are only supplements to local laws and regulations.

2.1 Unpacking and Inspection

⚠ WARNING

Check all safety signs, warning labels, and nameplates on products.
Ensure that the safety signs, warning labels, and nameplates are clearly visible and not removed or covered before the product is decommissioned.

NOTICE

After receiving the product, check whether the appearance and structural parts of the product are damaged, whether the transformer leaks oil, and whether the packing list is consistent with the actual ordered product. If there are problems with the above inspection items, do not install the product and contact SUNGROW in time.

2.2 Hoisting and Transportation

⚠ WARNING

Risk of personal injury or device damage due to incorrect operation!

- **Follow the procedure of work of heights when walking on the top of the product.**
- **All hoisting and transportation must comply with the relevant codes and regulations of the nation/region where the project is located.**

NOTICE

All equipment and tools used during operation must have been regularly maintained.

⚠ CAUTION

Improper hoisting may cause personal injury!

- **It is strictly prohibited to stand within 5m - 10m outside the operating area (i.e., under the boom and the hoisted machine) to avoid casualties.**
- **The product must be hoisted and moved by professional personnel. Before the operation, be sure to wear personal protective equipment.**
- **Stop hoisting in the event of severe weather, such as heavy rain, thick fog, or strong wind.**
- **When hoisting and moving the product, be aware of its size and weight and keep the balance to prevent it from turning over or falling.**

2.3 Electrical Connection

⚠ DANGER

Before electrical connections, please make sure that the product is not damaged. Otherwise, it may cause danger!

Before electrical connections, please make sure that the product switch and all switches connected to the product are set to "OFF", and use measuring equipment to ensure that there is no voltage at the connection. Otherwise, an electric shock may occur!

DANGER

PV modules will generate lethal high voltage when exposed to sunlight.

- **Operators must wear proper personal protective equipment during electrical connections.**
- **Before performing an electrical connection, be sure to disconnect the PVS and use measuring equipment to ensure that cables are voltage-free.**
- **Respect the protection requirements and precautions of PV modules.**

DANGER

Danger to life due to a high voltage inside the inverter!

- **Be sure to use special insulation tools during cable connections.**
- **Note and observe the warning labels on the product, and perform operations strictly following the safety instructions.**
- **Respect all safety precautions listed in this manual and other pertinent documents.**

WARNING

Damage to the device caused by incorrect wiring is not covered by the warranty.

- **Electrical connection must be performed by professional personnel who wear personal protective equipment.**
- **All cables used in the PV generation system must be firmly attached, properly insulated, and adequately dimensioned.**

WARNING

Before connecting the PV module to this product, check and confirm the polarity correctness of the PV module, and then connect it to the corresponding position of this product.

During the installation and operation of the product, please ensure that the positive or negative polarities of PV strings do not short-circuit to the ground. Otherwise, an AC or DC short-circuit may occur, resulting in product damage. The damage caused by this is not covered by the warranty.

NOTICE

Comply with the regulations related to the local grid during wiring.

2.4 Operation

⚠ DANGER

When the product is working,

- **It is strictly forbidden to touch the live parts of the product. Otherwise, an electric shock may occur.**
- **It is strictly prohibited to disassemble any parts of the product. Otherwise, an electric shock may occur.**
- **It is strictly prohibited to touch any hot parts of the product (such as the heat sink). Otherwise, it may cause burns.**

2.5 Operation and Maintenance

⚠ DANGER

Risk of inverter damage or personal injury due to incorrect service!

- **Before maintaining the product, be sure to disconnect the output switch of the PVS and the load switch/disconnector of the transformer.**
- **After the inverter is powered off for 20 minutes, measure the voltage and current with measuring equipment. Only when there is no voltage nor current can operators who wear protective equipment operate and maintain the inverter.**
- **During maintenance, be sure to check the warning labels in the product and comply with the requirements on them.**
- **Even if the inverter is shut down, it may still be hot and cause burns. Operating the inverter with protective gloves after it cools down.**

⚠ DANGER

The devices inside the inverter carry high voltage. Touching these devices may lead to fatal electric shock.

- **Live line measurement can only be performed by professional personnel who know the PV system well. Before measurement, be sure to take proper protection methods (e.g., wear insulating gloves, etc.);**
- **During live line measurement, the operator must be accompanied by others to ensure personal safety.**

DANGER

Electric shock or fire may occur due to device damage or system fault.

- **Visually inspect for device damages or other hazards before the operation**
- **Check whether other external devices or circuit connections are in a safe state.**
- **Make sure the device is in a safe state before operating.**

WARNING

If some devices need to be replaced during operation and maintenance, please contact SUNGROW.

WARNING

Wait at least 20 minutes after the product stops running and ensure that the voltage has dropped to within the safe voltage range, the low-voltage cabinet is connected with the grounding cable, the transfer switch, if any, is in the grounding position, the grounding switch, if any, is closed, and the load switch, if any, is open. After confirming that all inspection items meet the requirements, maintain or repair the product following the warning labels inside the product.

NOTICE

To avoid the risk of electric shock, do not perform any other maintenance operations beyond those described in this manual. If necessary, contact SUNGROW for maintenance. Otherwise, the losses caused are not covered by the warranty.

NOTICE

If work is carried out while the device is live, insulation protection is necessary and at least two personnel should be present at the site at the same time.
The PV plants where the inverter is located are usually located in off-city fields, and appropriate field rescue facilities should be prepared for use in need.

CAUTION

To prevent misuse or accidents caused by unrelated personnel, post prominent warning signs or demarcate safety warning areas around the device to prevent accidents caused by misuse.

2.6 Disposal

⚠ WARNING

Please scrap the inverter in accordance with relevant local regulations and standards to avoid property losses or casualties.

3 Product Description

3.1 Product Introduction

In large and medium-sized utility power plant systems, the PV grid-connected inverter, which contains multiple PV inverter units, transformers, and other equipment, provides a sound solution to convert the DC power generated by PV arrays into AC power, and feed it into the grid.

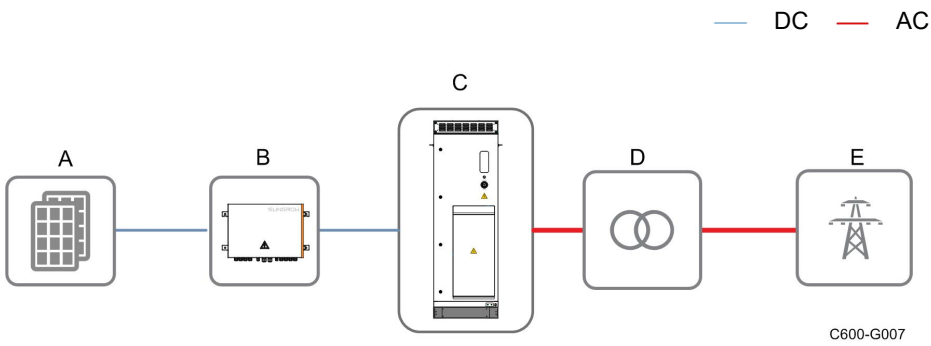

No.	Name	Description
A	PV array	Monocrystalline silicon, polycrystalline silicon, and thin film without grounding.
B	PVS	Combine the current of multiple PV strings and output.
C	PV grid-connected inverter	Convert the DC power from the PV arrays into AC power.
D	Transformer	Converts the low-voltage AC power output by inverter into medium-voltage AC power.
E	Grid	-

3.2 Product Composition

SG4400UD is taken as an example to introduce main devices inside the PV grid-connected inverter, The product consists of 4 inverter units (Figure A below).

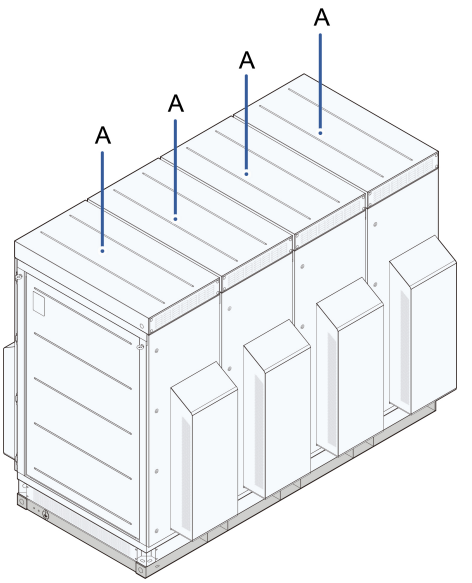

* The figure is for reference only. And the actual product received shall prevail.

Model	Quantity
SG1100UD / SG1100UD-20 / SG1100UD-21	One inverter units
SG2200UD / SG2200UD-20 / SG2200UD-21	Two inverter units
SG3300UD / SG3300UD-20 / SG3300UD-21	Three inverter units
SG4400UD-20 / SG4400UD-21	Four inverter units

3.3 Main Internal Equipment

3.3.1 Main Parts of Inverter Unit

Appearance of Inverter Unit

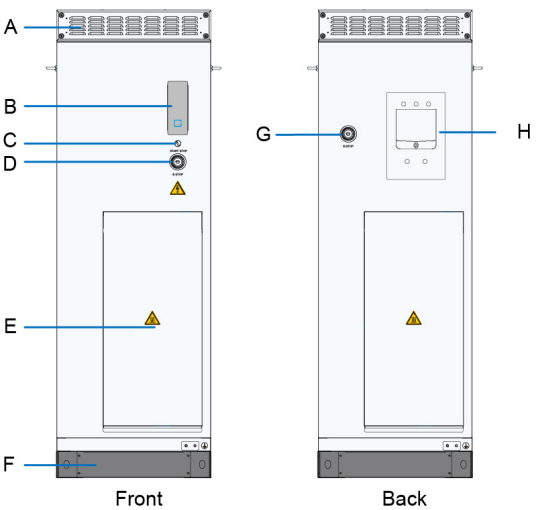

table 3-1 Appearance

No.	Name
A	Top air inlet and outlet
B	Indicator panel
C	Start/Stop knob
D	Emergency stop button. In case of emergency, press this button to disconnect the electrical connection inside the inverter unit.
E	Bottom and side air inlet and outlet
F	Base
G*	Emergency stop button. In case of emergency, press this button to disconnect the electrical connections of all inverter units.
H*	LCD

* Subject to the actual product.

3.3.2 LED Indicator

table 3-2 Indicator Status Description

Color	Status	Description
 Blue	Steady on	The inverter is in grid-connected operation.
	Fast blinking (interval: 0.2s) 	WiFi connection is established and data communication is in process. No fault is detected.
	Slow blinking (interval: 0.5s) 	The inverter is in a standby state.
	Glowing and fading (interval: 2s) 	The DC or AC side is powered on and the inverter is in a standby or is starting (not connected to the grid).
 Red	Steady on	A fault occurred and the system cannot be connected to the grid for power generation.
	Blinking (Interval 0.2s)	WiFi connection is established and data communication is in process. A fault is detected.
 Grey	Off	The AC and DC power are disconnected.

⚠ WARNING

Voltage may still be present in AC side circuits after the indicator is off. Pay attention to the electrical safety during operating.

3.3.3 Internal Structure of Inverter Unit

Open the front door of the inverter unit cabinet to see the DC cabinet, as shown in the left figure below. Open the back door of the inverter unit cabinet to see the AC cabinet, as shown in the right figure below.

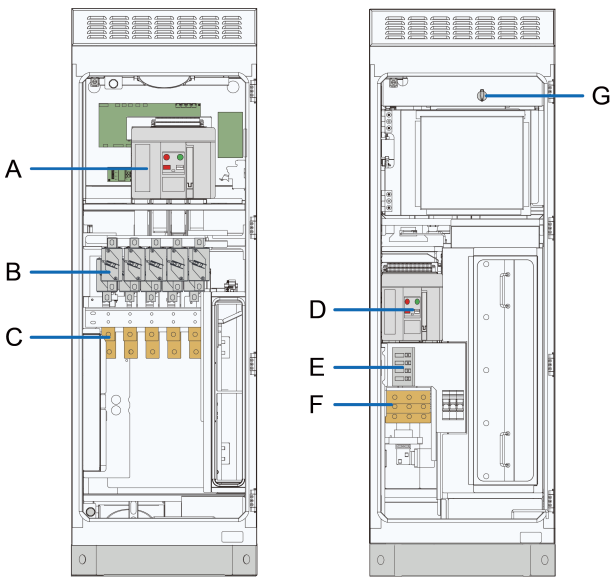

* The figure is for reference only. And the actual product received shall prevail.

No.	Name	Description
A	DC load switch QS1	Control the on/off of the DC side circuits of the inverter.
B	DC fuse	-
C	DC wiring copper bar	-
D	AC circuit breaker QF1	Control the on/off of the AC side circuits of the inverter.
E	Fuse of AC side SPD	-
F	AC wiring copper bar	-
G	Maintenance switch Q1	Disconnect it before maintenance and repair.

3.4 Symbol on Products

Marks	Explanation
CE	Comply with CE certification.
	High voltage inside! Risk of electric shock by touching it!
	The temperature here is beyond the acceptable range for the human body, please do not touch it arbitrarily to avoid personal injury.
	Firmly ground the protective ground terminal to ensure the safety of operators.
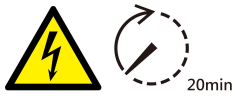	The inverter can only be maintained and overhauled after being powered off for 20 minutes.
	It is recommended to wear noise-cancellation earplugs since the product may generate noise during operation.
	It is strictly forbidden to touch the fan blades when the fan is rotating.
	Read this manual carefully before any operation on the product.
	Do not dispose of this product as household waste.

4 Transport and Storage

4.1 Precautions

⚠ CAUTION

Failure to transport and store the product in accordance with the requirements in this manual may invalidate the warranty.

4.2 Transportation Requirements

- Choose appropriate means of transportation according to the size and weight of the product.
- Place the product horizontally during transportation.
- Avoid collision or strong shock during transportation.
- Transport the product in accordance with relevant local regulations and standards.
- Wear proper personal protective equipment when operating the product.

4.3 Storage Requirements

- Store the product indoors, for example, large warehouse or workshop, to prevent possible condensation or its bottom from being soaked by rainwater in the rainy season.
- If the product must be stored outdoors due to site conditions, the product base must be raised. The specific height should be reasonably determined based on site geological and meteorological conditions.
- Do not store the inverter in places susceptible to direct sunlight, rain, and strong electric field.
- Store the product on a dry, flat, and stable ground with sufficient carrying capacity and without any vegetation cover. The ground must be flat and dry.
- Before storage, ensure that the doors of the product and all internal equipment are locked.
- The storage temperature should be between -40 ℃ and +70 ℃, and the relative humidity should be between 0 and 95% without condensation.
- The air inlet and outlet of the product should be effectively protected, and effective measures should be taken to prevent rainwater, sand, and dust from penetrating the product.
- Carry out periodic inspections. Check the product and the inner equipment for damage at least every half a month.

- Avoid storage for more than three months. If the product is stored for too long, be sure to take strict protective measures and carry out the necessary inspection. Open the product door first to visually check the product and internal equipment for damage. If the product is stored for more than a year, check it after it is powered on and starts. If necessary, request professionals for testing before installation.

5 Mechanical Mounting

⚠ WARNING

Respect all local standards and requirements during mechanical installation.

5.1 Safety Precautions

⚠ WARNING

Only install the product when it is complete and intact.

Before installation, ensure that the product and all internal equipment are intact, without any damage.

⚠ WARNING

Risk of personal injury or device damage due to incorrect operation!

- **Follow the procedure of work of heights when walking on the top of the MV grid-connected inverter.**
- **All hoisting and transportation must comply with the relevant codes and regulations of the nation/region where the project is located.**

NOTICE

- **If any tool is used for unpacking, be careful not to damage the product.**
- **After receiving the product, check whether the appearance and structural parts of the product are damaged, whether the transformer leaked oil, and whether the packing list is consistent with the actual ordered product. If there are problems with the above inspection items, do not install the product and contact SUNGROW in time.**

CAUTION

Improper hoisting may cause personal injury!

- **It is strictly prohibited to stand within 5m - 10m outside the operating area (i.e., under the boom and the hoisted machine) to avoid casualties.**
- **Only professional personnel can operate the product, and be sure to wear personal protective equipment when operating.**
- **Stop hoisting in the event of severe weather, such as heavy rain, thick fog, or strong wind.**
- **Be sure to hoist the product smoothly and evenly to avoid collision and vibration. Do not turn the product upside down, nor hoist it for a long time.**
- **When hoisting and moving the product, be aware of its size and weight and keep the balance to prevent it from turning over or falling.**

5.2 Inspection Before Installation

5.2.1 Scope of Delivery

Accessories delivered with the product are listed below:

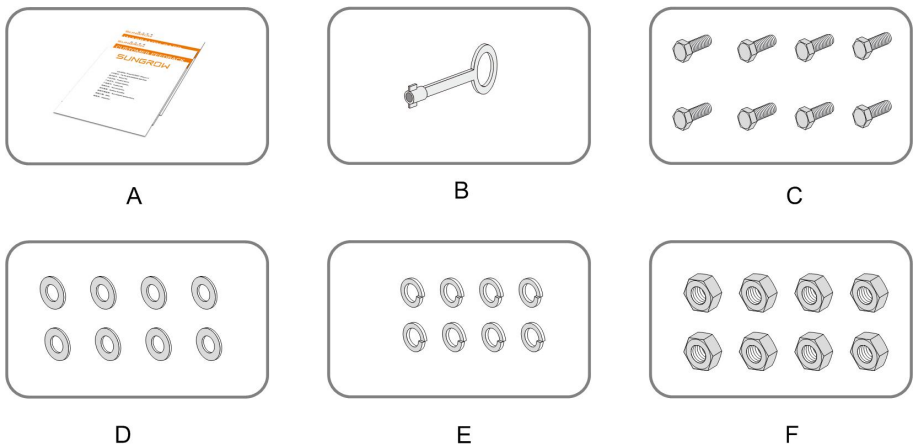

figure 5-1 Scope of Delivery

No.	Name
A	Relevant documents (the certificate of quality, warranty card, delivery inspection report, etc.)
B	Key
C	M16 x 45 bolt
D	M16 flat washer
E	M16 spring washer
F	M16 nut

* The M12 bolt combination is configured according to the actual product.

The accessories shown in above figures are for reference only. The product received may differ.

5.2.2 Product Inspection

- Check whether the product received is the ordered one.
- Check that the scope of delivery is consistent with the contract against the packing list.
- Visually check the product for any damage.

If any problems are found or there is any question, please contact the forwarding company or SUNGROW.

WARNING

Only install the product when it is complete and intact.

Before installation, ensure that:

- **The product is in good condition, without any damage.**
- **The product and all internal equipment are intact, without any damage.**

5.3 Installation Environment Requirements

5.3.1 Installation Site

- The climate environment and geological conditions, such as stress wave emission and underground water level, should be fully considered when selecting the installation site.
- The installation site should be dry and well ventilated.
- There should be no trees around the installation site to prevent branches or leaves blown off by heavy winds from blocking the door or air inlet.
- The installation site should be away from areas where toxic and harmful gases are concentrated, and free from inflammable, explosive, and corrosive materials.
- The installation site should be far away from residential areas to avoid noise.

5.3.2 Foundation

- The soil at the installation site should be compact. It is recommended that the relative density of soil at the installation site be no less than 98%. Take relevant measures to ensure a stable foundation in case of loose soil.
- The foundation pit must be compacted and filled to provide sufficient and effective support for the product.
- The foundation should be higher than the horizontal ground to prevent the product base and the interior from rain erosion.
- The cross-sectional area and height of the foundation should meet the requirements.

- Cabling should be considered when building the foundation.
- Pre-bury the threading pipe at the bottom of the foundation according to the location of the cable inlet holes at the bottom of the product.
- A drainage system is necessary to prevent the bottom or internal equipment of the product from being soaked in water during the rainy season or during heavy rainfall.
- The dregs excavated during foundation construction should be removed immediately to avoid the latter impact on hoisting.
- Pre-bury the channel steel.

5.3.3 Installation Spacing

To ensure better heat dissipation and facilitate later maintenance, reserve enough space around the installation site.

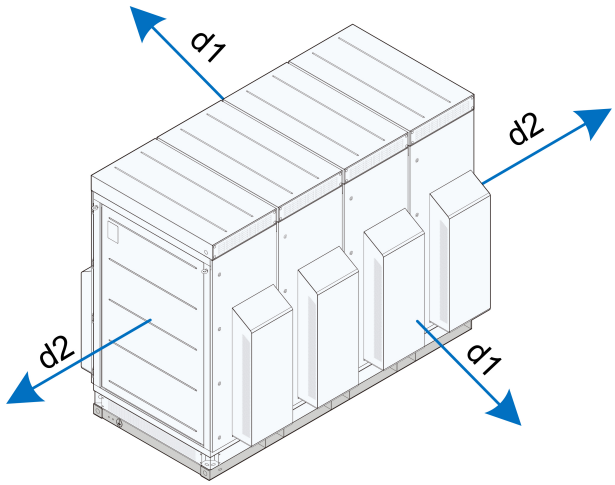

table 5-1 Without obstacles and heat source

No.	Space
d1	≥1000mm
d2	

table 5-2 With obstacles or heat source

No.	Space
d1	≥3000mm
d2	≥1200mm

5.4 Hoisting and Fixing

5.4.1 Preparation Before Hoisting

⚠ WARNING

Professional cranes must be used and must be operated by qualified personnel. Otherwise, personal injury or product damage may occur!

⚠ CAUTION

- **Improper hoisting may cause personal injury!**
- **It is strictly prohibited to stand within 5m - 10m outside the operating area (i.e., under the boom and the hoisted machine) to avoid casualties.**
- **Professional cranes must be used and must be operated by professional personnel.**
- **Stop hoisting in the event of severe weather, such as heavy rain, thick fog, or strong wind.**

5.4.2 Crane and Hoisting Ropes Requirements

Item	Requirement	Source
Sling	The sling cannot be a wirerope sling. Hoist the product by the hoisting points at the bottom of the cabinet.	Not included in delivery.
	Sling 1 is used to connect the beam and the crane. Sling 2 is used to connect the cabinet and the beam.	Not included in delivery.
	Sling 1, two with the same length of 4,500 mm. A single sling 1 can withstand ≥ 5,000 kg.	Not included in delivery.
	Sling 2, four with the same length of 3,000 mm. A single sling 2 can withstand ≥ 5,000 kg.	Not included in delivery.
Beam	A special designated hoisting tool.	Included in deliverables, one in a delivery.
Wooden blocks	-	Included in deliverables, one in a delivery.

5.4.3 During Hoisting

- Ensure safe and reliable connections of all slings.
- Ensure that the product is steady and not tilting during the whole hoisting process.

- The product should be hoisted vertically. Never drag the product on the ground or the top of the lower product, and never pull and push it on any surface.
- Suspend the hoisting when the product is hoisted 300 mm from the supporting surface to check the connection between slings and the product. Continue hoisting only after confirming a reliable connection.
- When the product is in place, place it lightly and smoothly. It is strictly forbidden to throw it to places outside the vertical landing place.
- The outdoor cabinet should be placed on a solid and flat site with good drainage and no obstacles or protrusions.
- Avoid scratching the product during hoisting.

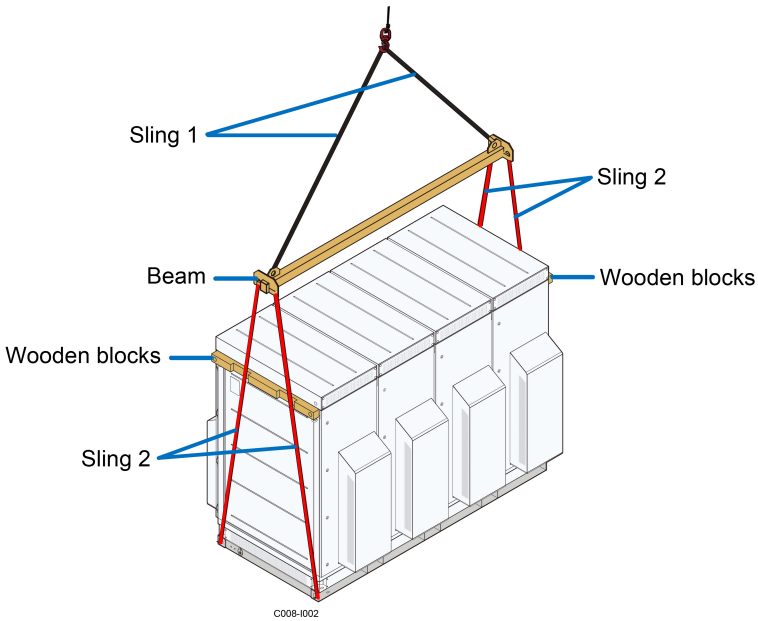

figure 5-2 SG4400UD Hoisting Diagram

When the cabinet is hoisted in place, remove the wooden blocks on both sides of the cabinet to ensure fine air intake of the whole product.

⚠ WARNING

Be sure to hoist the product smoothly and evenly to avoid collision and vibration. Do not turn the product upside down, nor hoist it for a long time. Otherwise, personal injury or product damage may occur!

5.4.4 Fixing

Hoist the product to the intended location and fix it.

Fixed by Bolt

Through the positioning holes at the bottom of the product, secure it to the foundation with M12 bolts.

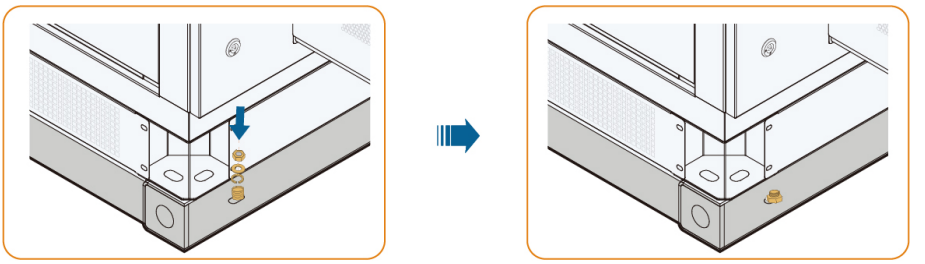

C008-I003

Fixed by L-shaped Angle Steels

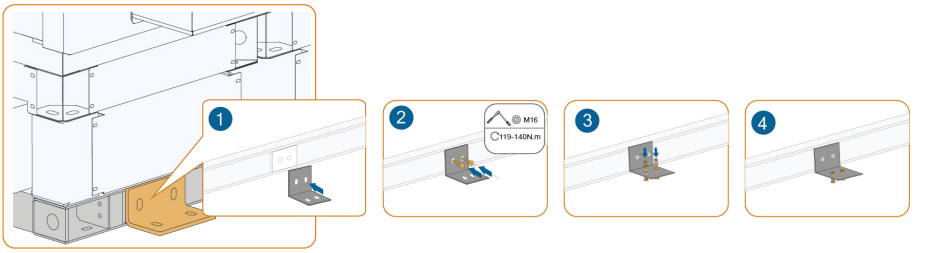

6 Electrical Connection

6.1 Precautions

DANGER

- **Before electrical connections, please make sure that the inverter is not damaged, otherwise, it may cause danger!**
- **Before electrical connections, please make sure that the product switch and all switches connected to the product are set to "OFF", and use measuring equipment to ensure that there is no voltage at the connection. Otherwise, an electric shock may occur!**
- **All switches cannot be closed until the electrical connection is completed.**

DANGER

PV modules will generate lethal high voltage when exposed to sunlight.

- **Operators must wear proper personal protective equipment during electrical connections.**
- **Before performing an electrical connection, be sure to disconnect the PVS and use measuring equipment to ensure that cables are voltage-free.**
- **Respect the protection requirements and precautions of PV modules.**

DANGER

Danger to life due to a high voltage inside the inverter!

- **Be sure to use special insulation tools during cable connections.**
- **Note and observe the warnings on the product.**
- **Respect all safety precautions listed in this manual and other pertinent documents.**

WARNING

Sand and moisture penetration may damage the electrical equipment in the product, or affect their operating performance!

- **Avoid electrical connections during sandstorms or when the relative humidity in the surrounding environment is greater than 95%.**
- **Carry out the electrical connection of the product on fine days with no wind and sand.**

⚠ WARNING

Damage to the device caused by incorrect wiring is not covered by the warranty.

- **Electrical connection must be performed by professional personnel who wear personal protective equipment.**
- **The cables used in the PV generation system must be firmly connected, in good condition, and well insulated to appropriate sizes.**

⚠ WARNING

- **Check and confirm the polarity correctness of the PV string, and then connect it to the corresponding position of this product.**
- **When installing and operating the product, make sure that the positive or negative polarities of PV strings do not short-circuit to the ground. Otherwise, an AC or DC short-circuit may occur, resulting in product damage. The damage caused by this is not covered by the warranty.**

NOTICE

- **Comply with the safety instructions related to PV strings and the regulations related to the local grid.**
- **During electrical connection, do not forcibly pull any wires or cables, as this may compromise the insulation performance.**
- **Ensure that all cables and wires have sufficient space for any bends.**
- **Adopt the necessary auxiliary measures to reduce the stress applied to cables and wires.**
- **Keep a sufficient distance between the cable and the heating device to avoid aging and damage of the insulation layer of the cable caused by high temperature.**

NOTICE

All electrical connections must comply with local and national/regional electrical standards.

- **Cables used by the user shall comply with the requirements of local laws and regulations.**
- **Only with the permission of the national/regional grid department, the inverter can be connected to the grid.**

6.2 Wiring Overview

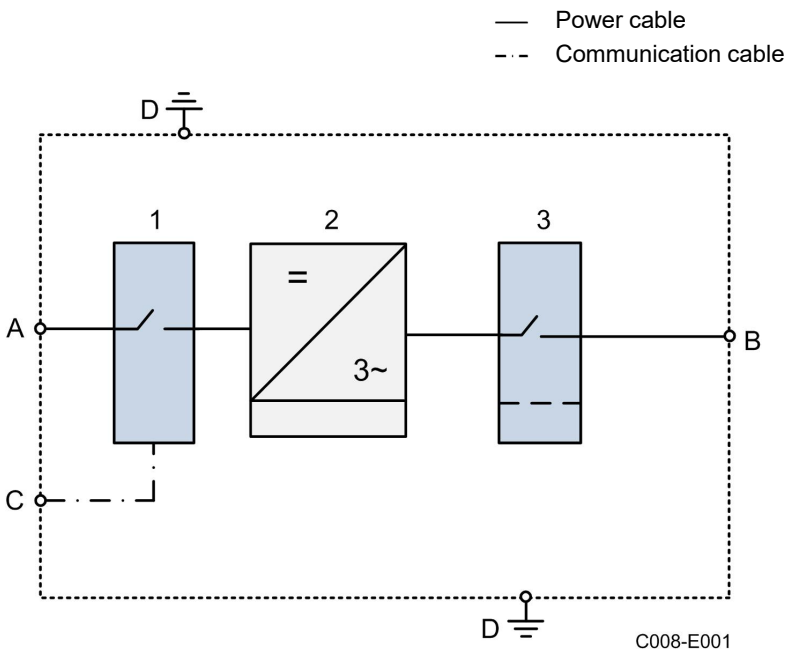

1- DC cabinet 2– Module cabinet 3– AC cabinet

table 6-1 Interface Description

No.	Description	Recommended Cable Specifications
A	DC input port	400 mm ^{2} at most
B	AC output port	70 mm ^{2} — 400 mm ^{2}
C	Communication port	2 x 0.75 mm ^{2} shielded twisted pair cable
D	Grounding	60 mm x 100 mm hot-dip galvanized flat steel
		50 mm ^{2} — 95 mm ^{2} grounding cable

6.3 Preparation Before Wiring

6.3.1 Installation Tools

Installation tools include but are not limited to the following recommended ones. Use other auxiliary tools on site as needed.


Torque screwdriver


Wire stripper

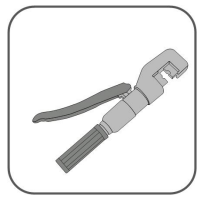
Hydraulic clamp


Heat gun


Multimeter


Screwdriver


Electric drill


Torque wrench


Protective gloves


Goggles


Insulated shoes


Protective clothing


Hard hat

6.3.2 Open the Product Door

step 1 Open the cabinet door.

step 2 Fix the doors of the inverter unit cabinet.

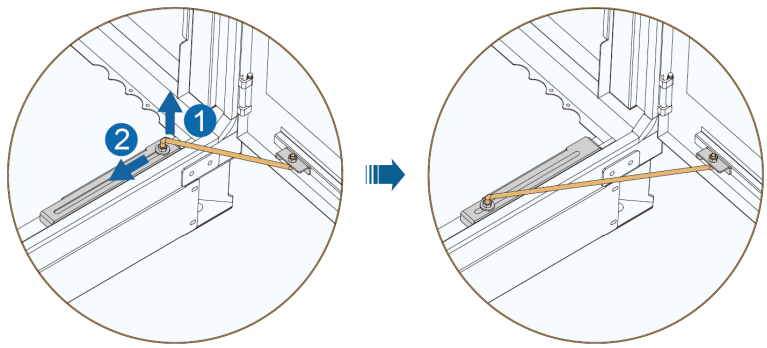

step 3 Remove the protective cover of the wiring area.

- - End

6.3.3 Cables

The cables must meet the following requirements:

- The current carrying capacity of the cable should meet the requirements. Factors affecting the current-carrying capacity of a conductor include but are not limited to:
  - Environmental conditions
  - Type of the insulation material of the conductor
  - Cabling method
  - Material and cross-sectional area of the cable
- Select cables with a proper diameter according to the maximum load, and the cables should be long enough.
- All DC input cables must be of the same specifications and materials.
- AC output cables of three phases must be of the same specifications and materials.
- Only flame-retardant cables can be used.

NOTICE

Cables used shall comply with the requirements of local laws and regulations. The cable colors in figures in this manual are for reference only. Please select cables according to local cable standards.

6.3.4 Position of Cable Inlet

For easy wiring, cables between external devices and the product are routed into the product through the bottom cable inlet.

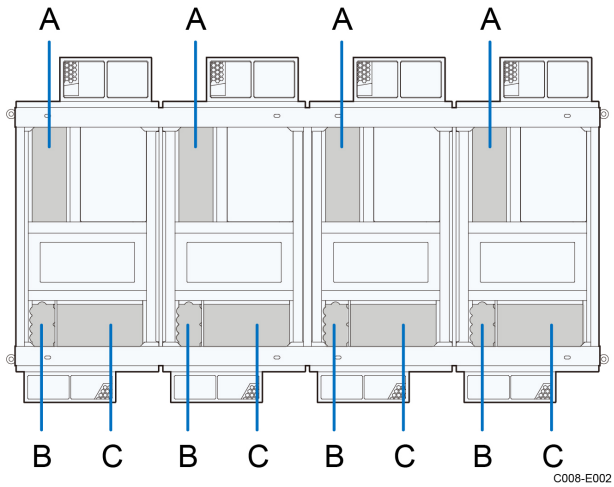

* The figure is for reference only. The product received may differ.

No.	Description
A	AC output cable inlet
B	Communication cable inlet
C	DC input cable inlet

6.3.4.1 Cable Inlet Preparation

step 1 Identify the positioning marks on the bottom.

step 2 Drill holes at the positioning marks.

step 3 Lead cables through holes into the cabinet.

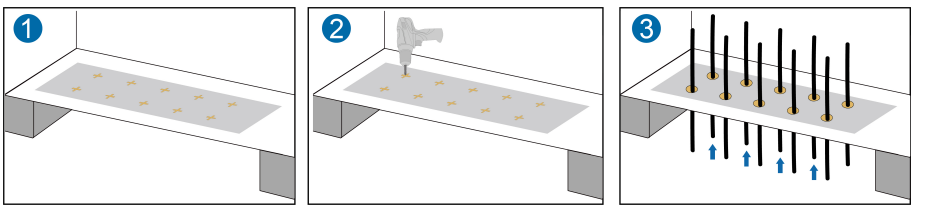

WARNING

When the wiring is completed, seal the gap between cables and holes with fire-proof/waterproof materials such as fireproof mud to prevent foreign matter or moisture from entering and affecting the long-term normal operation of the product!

- - End

6.4 Ground Connection

DANGER

Products must be reliably grounded!

- **The grounding cable must be reliably grounded, otherwise, it may cause a fatal electric shock to the operator.**
- **The grounding cable must be reliably grounded, otherwise, equipment may be damaged if struck by lightning.**
- **The grounding cable must be reliably grounded, otherwise, equipment may not operate normally.**

⚠ WARNING

- **Connect the grounding terminal to the protective grounding point before connecting AC cables, DC cables, and communication cables.**
- **Both grounding terminals on the side of the product must be connected to the protective grounding points reliably. SUNGROW shall not be held liable for any damage caused by the violation.**

NOTICE

Note the following during ground connection:

- **Observe specific codes and regulations of the country/region where the project is located to perform ground connections.**
- **All grounding connections inside the PV system must be secure and reliable.**
- **Measure to ensure the ground resistance is no more than 4Ω after ground connection.**

6.4.1 Overview

There are two grounding methods: fixing by wielding with grounding flat steel and fixing with grounding cable.

6.4.2 Grounding Flat Steel

Weld 60 mm x 100 mm hot-dip galvanized flat steel to the grounding point.

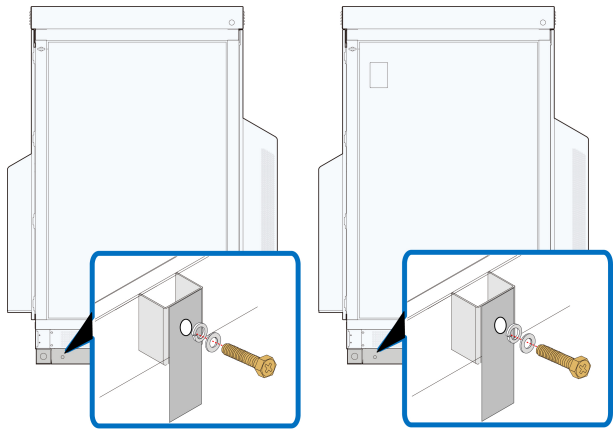

6.4.3 Grounding Cable

Use 50 mm^2 ~ 95mm^2 grounding cables to reliably connect the two grounding terminals to the grounding points of the system.

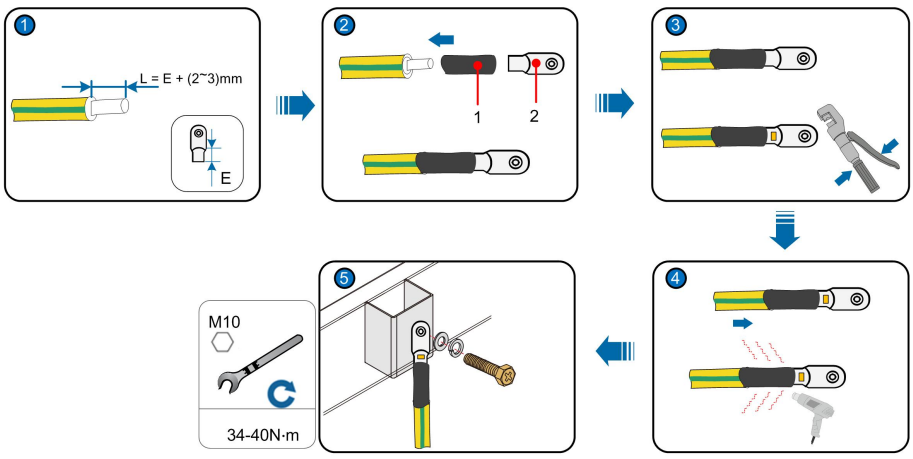

C000-E021

1: Heat shrink tubing 2: OT/DT terminal

6.5 DC Input Connection

DANGER

The PV string will generate lethal high voltage when exposed to sunlight.

Respect all safety instructions listed in relevant documents about PV strings.

WARNING

- **Make sure the PV array is well insulated to the ground before connecting it to the inverter.**
- **Make sure the maximum DC voltage and the maximum short circuit current of any string never exceed inverter permitted values specified in "Technical Parameters".**
- **Check and confirm the polarity correctness of the PV string, and then connect it to the corresponding position of this product.**
- **When installing and operating the product, make sure that the positive or negative polarities of PV strings do not short-circuit to the ground. Otherwise, an AC or DC short-circuit may occur, resulting in product damage. The damage caused by this is not covered by the warranty.**

6.5.1 Overview

DC wiring area

Negative Grounding

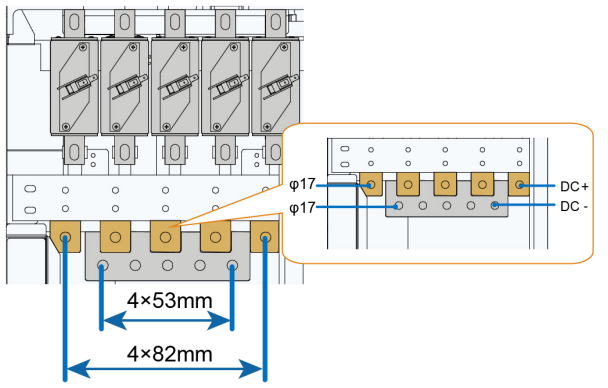

figure 6-1 5-way DC input

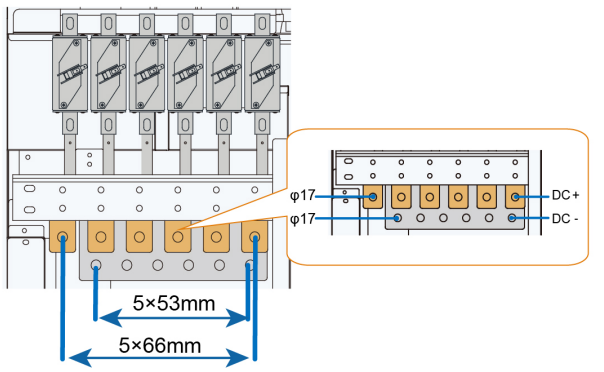

figure 6-2 6-way DC input

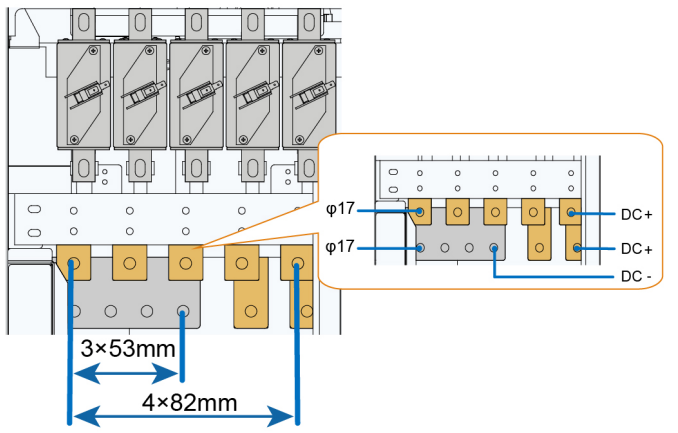

figure 6-3 7-way DC input

Floating Grounding

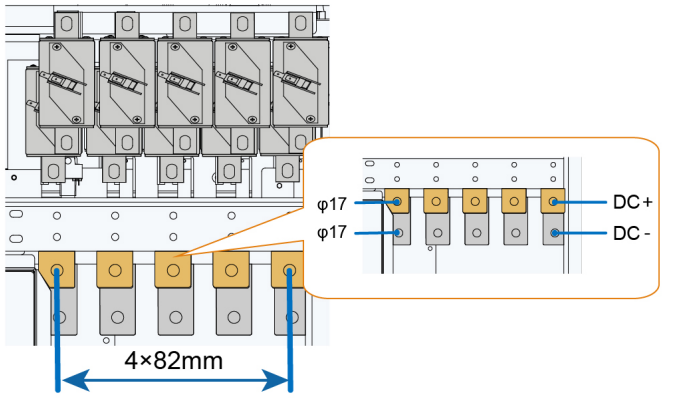

figure 6-4 5-way DC input(Single hole)

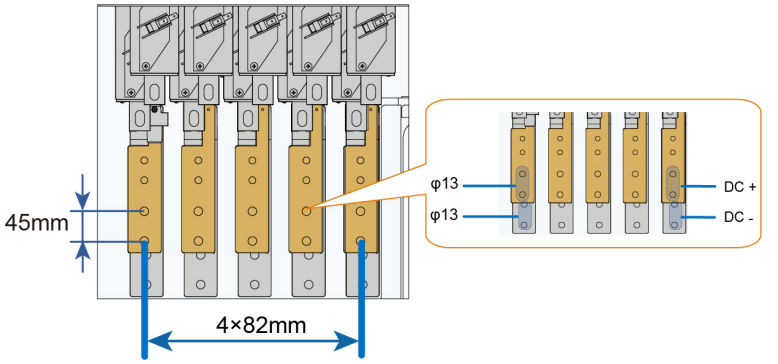

figure 6-5 5-way DC input(Double hole)

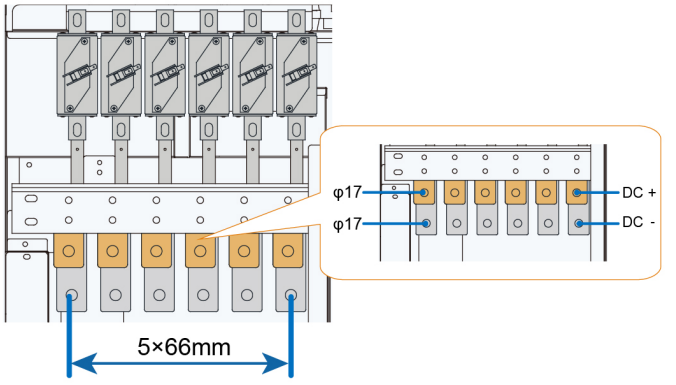

figure 6-6 6-way DC input

* The wiring area is subject to the actual product

Mark	Discreption
DC+	DC side negative cable connection area
DC-	DC side negative cable connection area
φ13 / φ17	Copper bar diameter

Wiring hole	Bolt	Torque(N.m)
φ13	M12	60–70N.m
φ17	M16	119–140N.m

6.5.2 Procedure

step 1 Lead the cable into the wiring area through the inlet hole, and mark the cable polarity.

step 2 Strip the protective layer of the cable to expose the copper core of the wire with strippers.

step 3 Install the OT/DT terminal to the wire and crimp them with a crimping tool. Install a heat shrink tubing to the terminal and heat it with a heat gun.

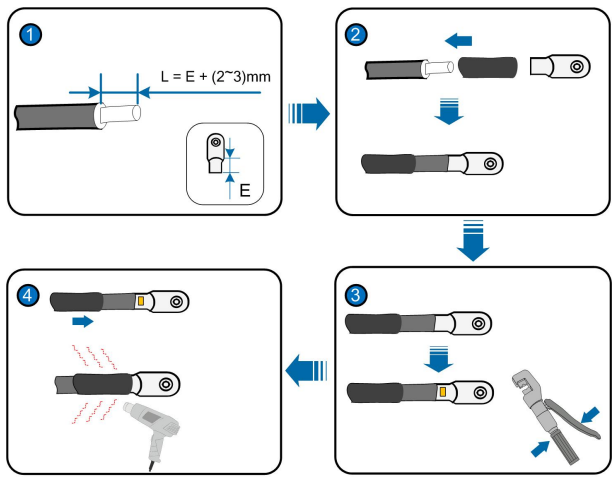

step 4 Secure the OT/DT terminal to the copper bar by bolts.

- If copper wires are used, fasten the bolt assembly as shown below.

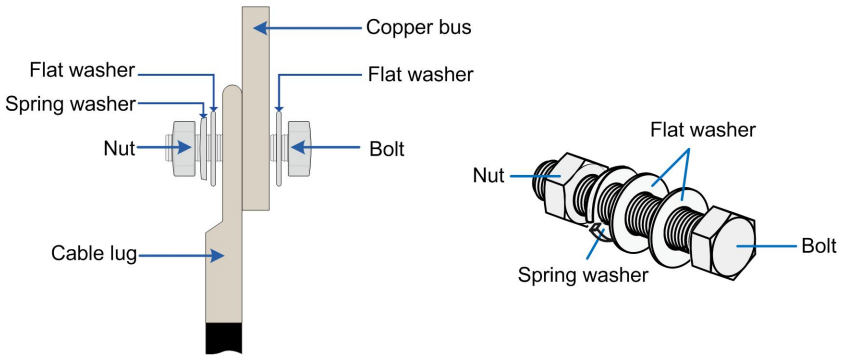

figure 6-7 Single Hole Copper Wire Connection

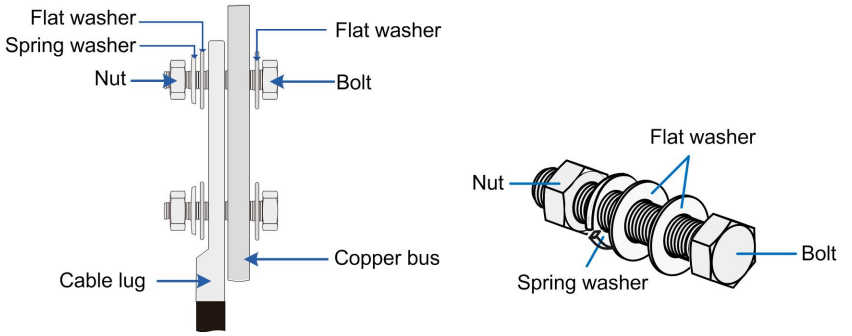

figure 6-8 Double Hole Copper Wire Connection

- If aluminum wires are used, fasten the bolt assembly as shown below.

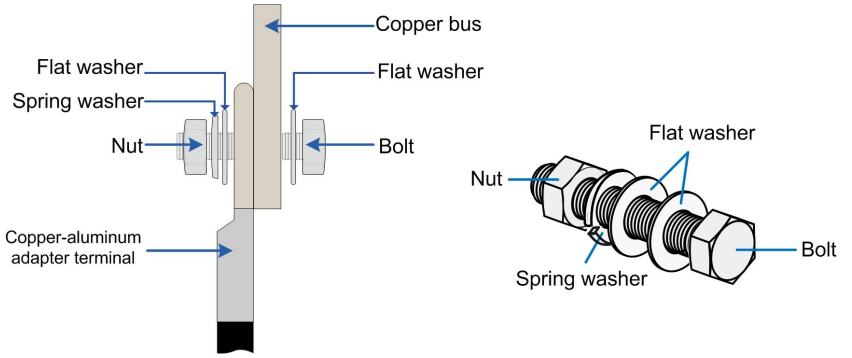

figure 6-9 Single Hole Aluminum Wire Connection

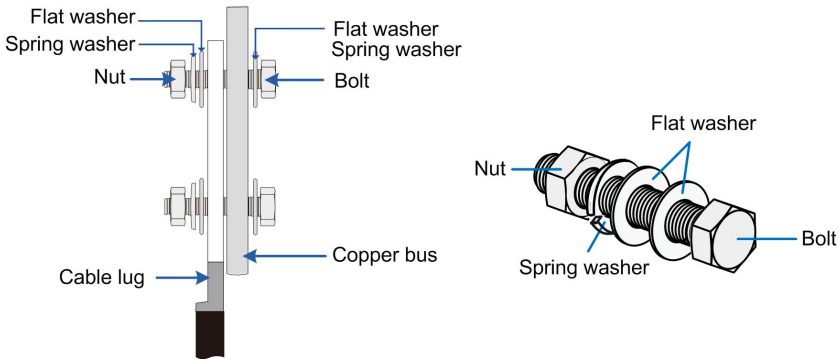

figure 6-10 Double Hole Aluminum Wire Connection

When the product is 7-way DC input, double side cable access mode is adopted.

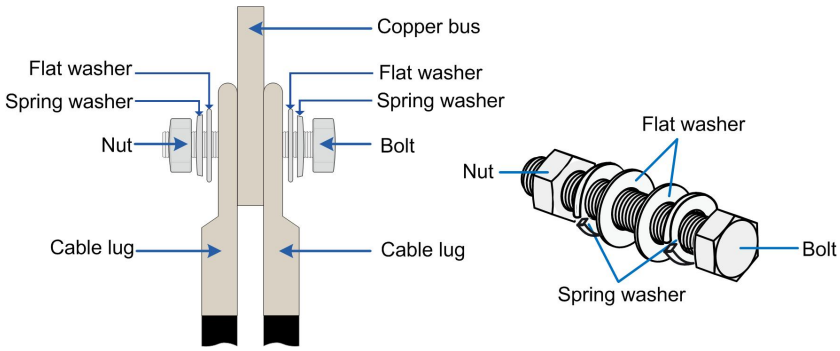

figure 6-11 Double Side Copper Wire Connection

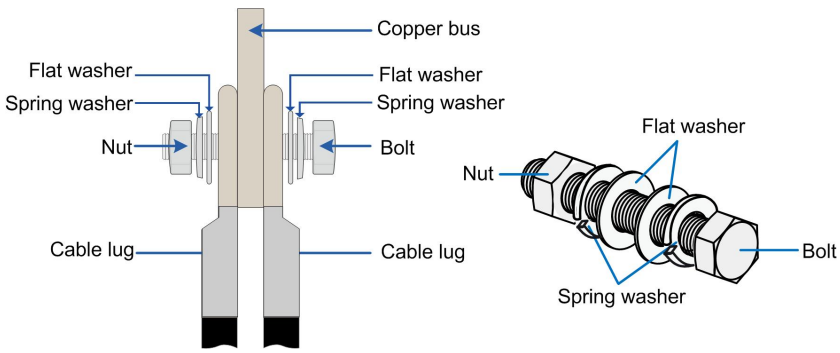

figure 6-12 Double Side Aluminum Wire Connection

step 5 Pull the cable back slightly after wiring to ensure that the cable is long enough.

NOTICE

- **Ensure that the selected terminal can directly contact the copper bar. If there are any problems, contact the terminal manufacturer.**
- **Ensure that the copper bar is not in direct contact with the aluminum wire. Otherwise, electrochemical corrosion may occur, impairing the reliability of the electrical connections.**

- - End

6.6 AC Side Connection

6.6.1 Inspection Before Wiring

- Check and ensure that the AC side of the inverter unit is disconnected.

  Refer to the transformer manual and use the special lever to disconnect the load switch of the transformer.
- Open the outer and inner doors of the HV compartment of the transformer. Check and ensure that the indicator on the inner door is off.
- Check and ensure that the sleeves and copper bars in the wiring area in the HV compartment are free from damage, deformation, and fracture.

6.6.2 AC Connection Area on the Bottom

AC Connection Area

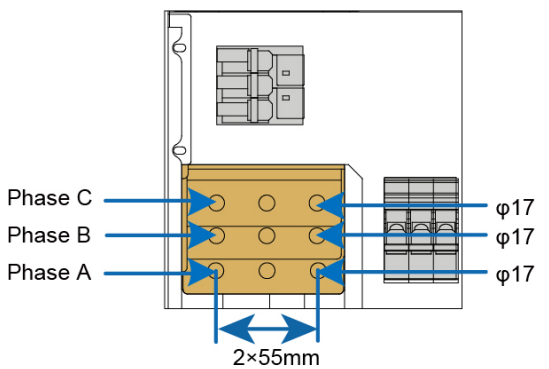

Procedure

step 1 Lead the cable into the wiring area through the inlet hole, and mark the cable polarity.

The three-phase wires (Phase A, Phase B, and Phase C) of a cable should be led through the same inlet hole.

step 2 Strip the protective layer of the cable to expose the copper core of the wire with strippers.

step 3 Install the OT/DT terminal to the wire and crimp them with a crimping tool. Install a heat shrink tubing to the terminal and heat it with a heat gun.

Both copper wire and aluminum wire can be used.

- If copper wire is used, use copper terminals.
- If the aluminum wire is used, use copper-aluminum transition terminals.

Each AC wiring copper bar can be connected with up to three output wires. Select the number of cables and wiring scheme reasonably according to the actual on-site conditions.

- - End

Follow-up Operations

Fix the cable to the copper bar after wiring referring to the fixing of DC cables.

Use fire-proof mud to seal the bottom cable inlet holes, keep the DC cabinet compartment uncluttered, and lock the door.

6.6.3 AC Connection Area at the Side

Preparation before Wiring

1 Remove the protective cover and the ventilation cover of the wiring area on the right side of the inverter.

2 Expose the copper bars on the cabinet.

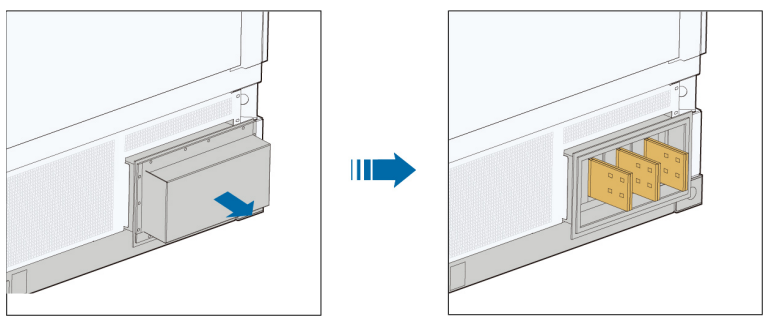

AC Connection Area

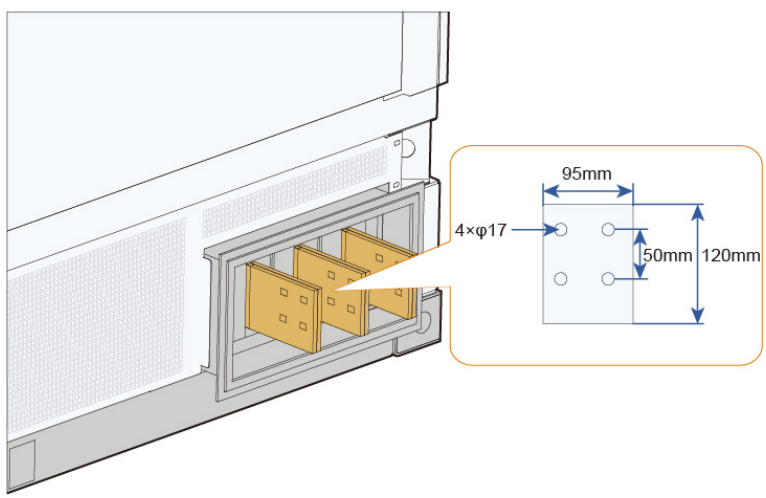

Procedure

Connect the copper bus to the the transformer side by using M16 bolts, and the torque is 119~140N.m.

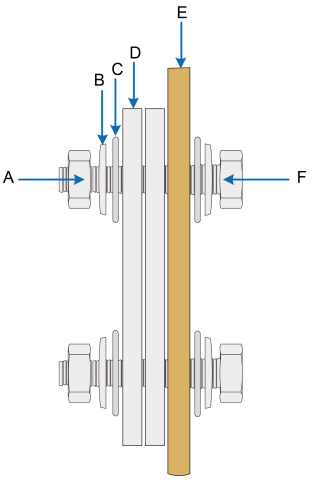

No.	Name	No.	Name
A	Nut	D	Copper bus
B	Spring washer	E	Copper bar of the transformer
C	Flat washer	F	Bolt

6.7 Communication Connection

6.7.1 Overview

There is an RS485 communication terminal block located at the upper part of the main inverter unit. As shown in Figure A below.

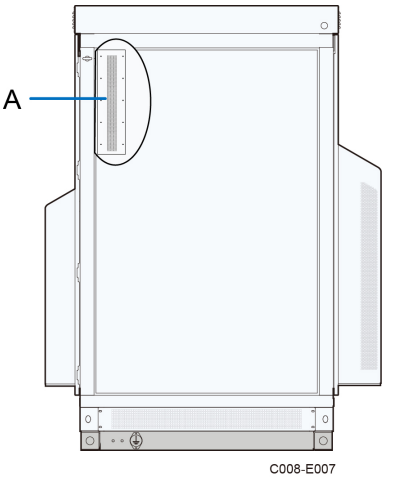

table 6-2 Port Mark and Definition (Example)

Marks	Plug-compatible Devices
Reserved RS485	PVS, meteo station, electricity meter, transformer, etc.

6.7.2 Procedure

Take one cable as an example.

step 1 Use a wire stripper to strip off the RS485 shielded twisted pair.

step 2 Press the shrapnel above the terminal with a screwdriver.

step 3 Insert the cable into the corresponding wiring hole.

step 4 Loosen the screwdriver, the shrapnel returns and compresses the cable.

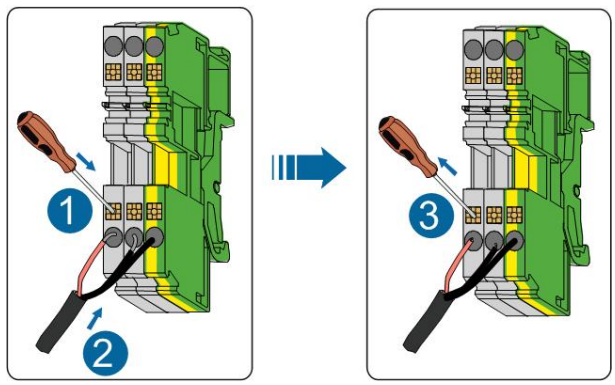

* The figure is for reference only. The product received may differ.

- - End

6.8 Ethernet Communication

Overview

Ethernet communication port located at the lower part of the main inverter unit.

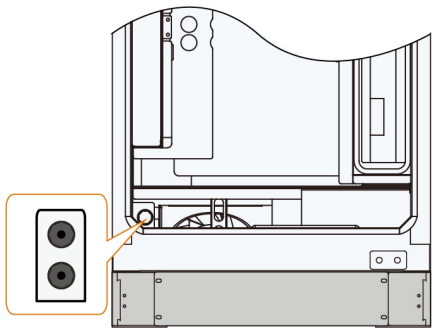

Procedure

Connect external monitoring devices to the Ethernet port by a CAT-5e cable.

6.9 Check After Wiring

6.9.1 Inspection

Check the wiring thoroughly and carefully when all electrical connections have been completed.

- Seal the gap between cables and the wiring holes with fireproof and waterproof materials.
- Put all protective covers back in place firmly.

⚠ WARNING

When the wiring is completed, check for the wiring correctness and then seal the gap between cables and inlet and outlet holes with fireproof/waterproof materials such as fireproof mud to prevent foreign matter or moisture from entering and affecting the long-term normal operation of the inverter.

6.9.2 Locking Cabinet Door

step 1 Release the fixing doors of the inverter unit cabinet and the power distribution cabinet. Unfix in reverse of the fixing method，refer to "6.3.2 Open the Product Door".

NOTICE

It is forbidden to close the door forcibly when the door is fixed.

step 2 Lock the cabinet door and pull out the key.

⚠ DANGER

Electric shock hazard!

Be sure to lock the cabinet door. Otherwise, non-professionals may be exposed to the running machine, and it may cause casualties.

- - End

7 Powering up and Powering down

7.1 Safety Instructions

DANGER

When the product is working:

- **It is strictly forbidden to touch the live parts of the product. Otherwise, an electric shock may occur.**
- **It is strictly prohibited to disassemble any parts of the product. Otherwise, an electric shock may occur.**
- **It is strictly prohibited to touch any hot parts of the product (such as the heat sink). Otherwise, it may cause burns.**

DANGER

Even if the inverter is shut down, it may still be hot and cause burns. Operating the inverter with protective gloves after it cools down.

WARNING

Press the emergency stop button only when the product fails or an emergency occurs to ensure that the product responds quickly.

WARNING

The product can only be put into operation after confirmed by a professional and approved by the local power department.

WARNING

For the product with a long shutdown time, it must be checked thoroughly and carefully to ensure all indexes are acceptable before being powered on.

7.2 Powering Up Operations

7.2.1 Removing Film on Product

The highlighted parts of the inverter unit in the figure below are covered with films. Be sure to remove the film before the product is officially put into operation.

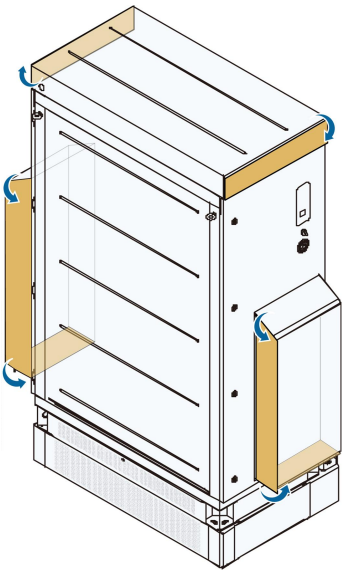

7.2.2 Removing Pressure Relief Screw

Be sure to remove the pressure relief screw (marked as A in the figure below) before the product is officially put into operation.

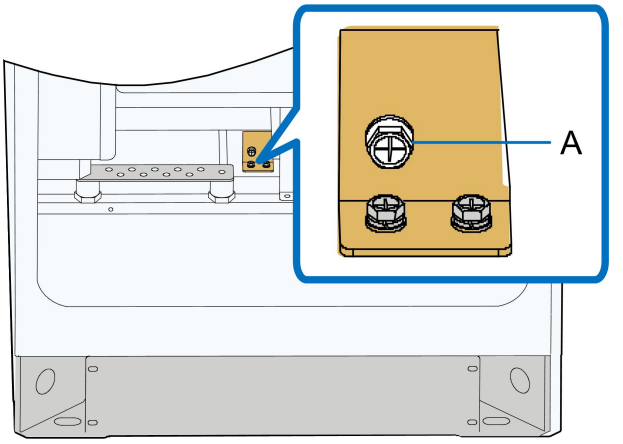

7.2.3 Installing Fuse in AC SPD

step 1 Open the fuse holder in the AC side. (SPD fuse position, see "3.3.3 Internal Structure of Inverter Unit")

step 2 Insert fuses.

step 3 Close the fuse holder in the AC side SPD.

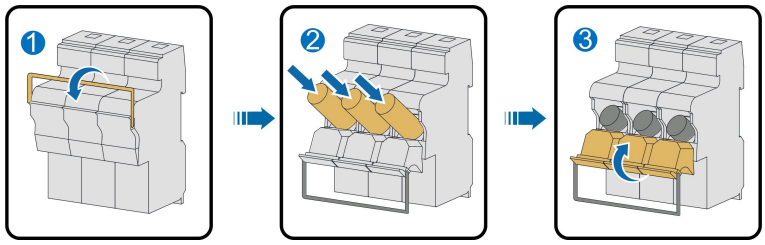

- - End

7.3 Inspection Before Powering Up

7.3.1 Inverter

- Ensure that the AC and DC switches and all internal miniature circuit breakers are disconnected.
- Check and ensure that the emergency stop button is released .
- Check various upstream and downstream electrical switches and buttons, as well as those on the inverter, to make sure that they can be operated flexibly and meet the requirements.
- Check whether the film at the air inlet and outlet are removed.
- Check whether the pressure relief screw has been removed.
- Check whether the fuse is installed in the AC SPD.

7.3.2 PV Array

The DC side voltage shall not exceed the maximum DC voltage allowed for the inverter. Otherwise, the inverter may be damaged and even cause safety accidents.

To ensure the stable and efficient operation of the whole system, it is recommended that batteries connected to an inverter should be of the same type and from the same manufacturer, and the number of batteries connected in series should be the same.

7.3.3 Checking Grid Voltage

- Measure accurately the grid 3-phase line-to-line voltages: L1-L2, L1-L3, and L2-L3.The voltages should not exceed the grid permissible voltage and the three phases are in balance.

> Adjust the transfer ratio of the transformer by qualified personnel if the grid voltage deviation is large.

- Measure and record the grid frequency. Measured data should not exceed the grid permissible frequency.
- Measure the THD and check the curve if possible. The inverter will stop running if the THD is serious.
- Record accurately all the measured data.

7.4 Powering Up Steps

step 1 Close the maintenance switch Q1 of all inverters.

step 2 Click **“Overview”** → **“General Information”** and click **“Shutdown”** in the **“Shortcut Menu”** on the Web page to shut down the inverter.

step 3 Check and ensure that the **“Access Protection Enabling”** switch is off on the Web page.

step 4 Close the output switch of the upstream PVS.

step 5 Close the DC load switch QS1 inside all inverters.

step 6 Rotate the **“Start/Stop”** knob to the **“Start”** position.

step 7 Start the inverter on the Web page, and the inverter begins to enter the grid-connected operation state.

For the position of the above switches, please see "3.3.3 Internal Structure of Inverter Unit"

- - End

7.5 Powering Down Operations

7.5.1 Planned Powering Down

step 1 Click **“Overview”** → **“General Information”** and click **“Shutdown”** in the **“Shortcut Menu”** on the Web page to shut down the inverter.

step 2 Rotate the **“Start/Stop”** knob to the **“Stop”** position.

step 3 Disconnect the output switch of downstream and upstream.

step 4 Check and ensure that the AC circuit breaker QF1 of all inverters is disconnected.

step 5 Disconnect the DC load switch QS1 inside all inverters.

step 6 Disconnect the maintenance switch Q1 of all inverters.

step 7 Inverter stops running.

For the position of the above switches, please see "3.3.3 Internal Structure of Inverter Unit"

- - End

7.5.2 Unplanned (Emergency) Powering Down

step 1 Press the emergency button, turn **“Start/Stop”** knob to the **“Stop”** position.

step 2 Disconnect the output switch of downstream and upstream.

step 3 Check and ensure that the AC circuit breaker QF1 of all inverters is disconnected.

step 4 Check and ensure that the DC side load switch QS1 of all inverters is disconnected.

step 5 Disconnect the maintenance switch Q1 of all inverters.

step 6 Inverter stops running.

For the position of the above switches, please see "3.3.3 Internal Structure of Inverter Unit".

- - End

8 WEB Operation

8.1 Communications Diagram

The wiring between the internal devices of the PV grid-connected inverter has been completed before delivery. Connect the PC with the switch inside the power distribution cabinet with the CAT-5e cable on site. After that, the WEB interface can be accessed on a PC.

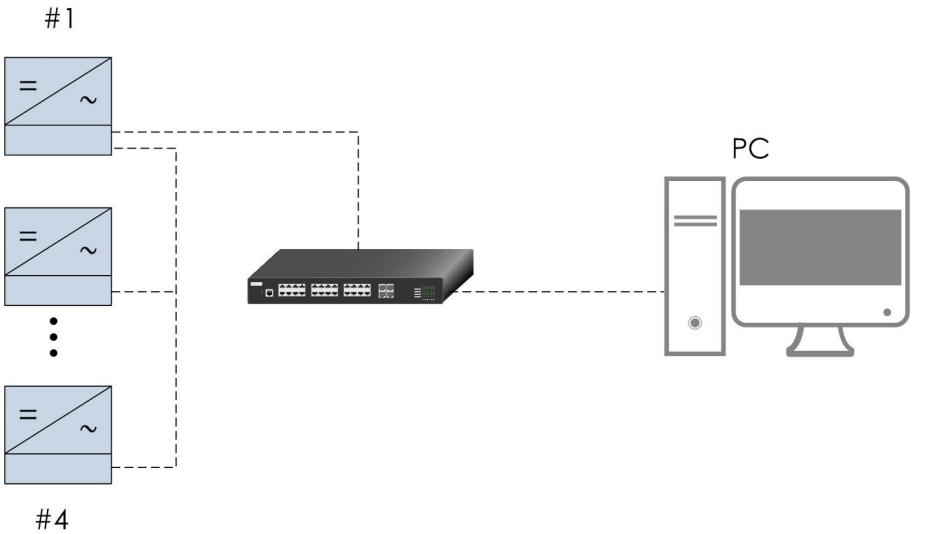

figure 8-1 Wired Communication Diagram

A wireless communication module is embedded inside the inverter, and the WEB interface can also be accessed through mobile devices such as mobile phones.

Note: Ensure that the distance d between the front of the #1 inverter and the mobile device meets the requirements:

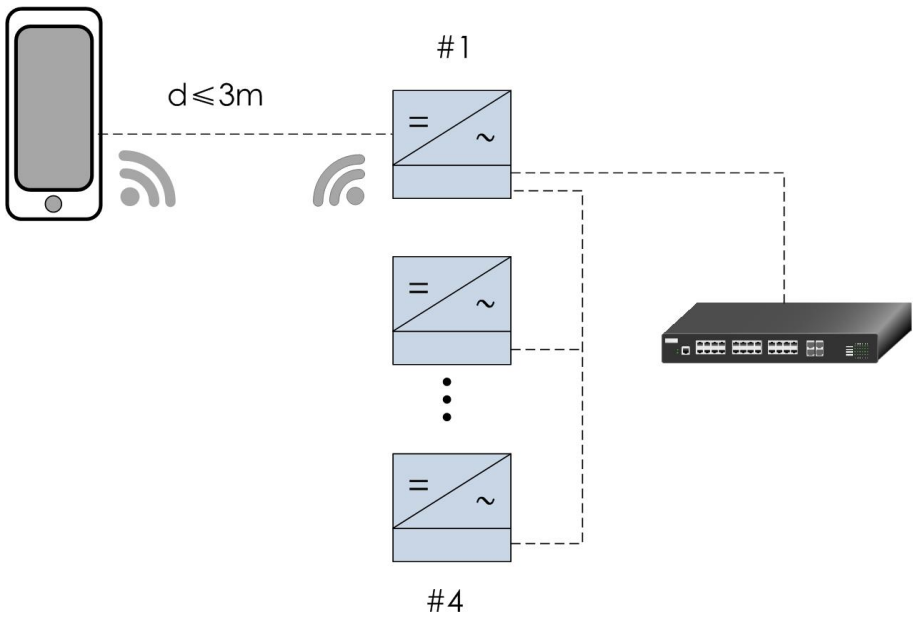

figure 8-2 Wireless Communication Diagram

8.2 Preparation Before Login

8.2.1 Login (PC)

step 1 To connect the PC to the product, connect the network cable to the network port of the PMD switch.

step 2 Configure the IP address of the PC. Set the IP address of the PC to the same network segment as the NET1 address of the smart unit board.

Default IP address of the NET1 port: 14.14.14.14.

Default IP address of the NET2 port: 12.12.12.12.

- - End

8.2.2 Login (Mobile Device)

step 1 Enable WiFi on the mobile device (such as a mobile phone), search for the hotspot, such as SG-xxx (xxx represents the device SN), and enter the password.

step 2 Open a browser on the mobile phone and enter the address (11.11.11.1) or domain (sungrow.net) to access the WEB interface.

- - End

8.3 Login Steps

step 1 Enter the server address to enter the homepage as a visitor by default.

PC:

- NET1 port, URL: 14.14.14.14.
- NET2 port, URL: 12.12.12.12.

Mobile device:

URL:11.11.11.1.

step 2 Click and select the desired language in the upper right corner of the interface.

step 3 Click to enter the login interface.

step 4 Enter the password **pw1111** and click **Login** to enter the interface as a general user.

After the initial login, please change the password in a timely manner to avoid pop-up modify password prompts.

- - End

8.4 Interface Introduction

8.4.1 Homepage

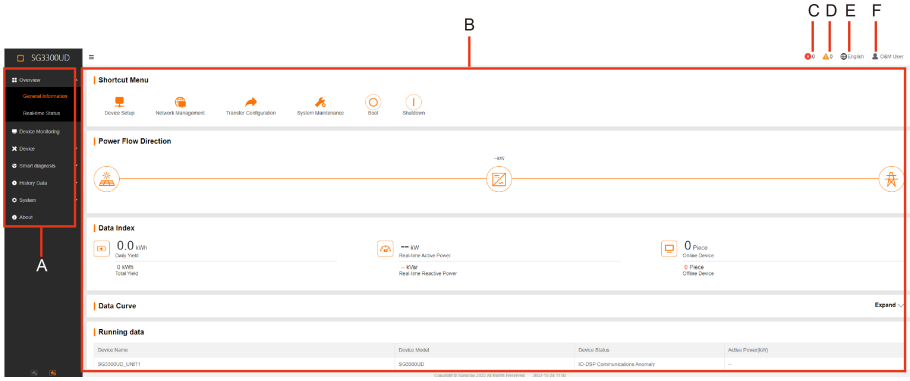

No.	Description
A	Navigation bar
B	Function display area
C	Fault number
D	Alarm number
E	Language switching options
F	User center

8.4.2 Viewing Fault Information

step 1 Click **“Overview”** → **“General Information”** on the left navigation bar to enter the homepage.

step 2 Click  in the upper-right corner of the interface to view information such as the name and time of the fault event.

- - End

8.4.3 Viewing Alarm Information

step 1 Click **"Overview"** → **"General Information"** on the left navigation bar to enter the homepage.

step 2 Click  in the upper-right corner of the interface to view information such as the name and time of the fault event.

- - End

8.4.4 Boot/Shutdown

step 1 Click **"Overview"** → **"General Information"** on the left navigation bar to enter the homepage.

step 2 Click **Boot** or **Shutdown** in the **Shortcut Menu**. Taking SG4400UD as an example.

- If an inverter unit needs to be started, e.g., Unit 1, check **SG4400UD_Unit1** and click **Save** to turn on the unit. If the whole inverter needs to be started, check the inverter model, e.g., **SG4400UD** and click **Save** to turn on the inverter.
- If an inverter unit needs to be shut down, e.g., Unit 1, check **SG4400UD_Unit1** and click **Save** to shut down the unit. If the whole inverter needs to be shut down, check the inverter model, e.g., **SG4400UD** and click **Save** to shut down the inverter.

- - End

8.4.5 Setting Initial Parameters

step 1 Click **"Device Monitoring"** in the left navigation bar.

step 2 Pull down **"Country /Region"** to set according to the product location, and pull down **"Machine Choose"** to set according to the actual product model. Click **"Settings"** to complete the initial parameter setting.

The above parameters have been configured before the product leaves the factory.

- - End

8.4.6 Setting Operation Parameters

step 1 Click **"Device Monitoring"** in the left navigation bar.

step 2 Select a device in the left device list in the function display area. Click **"Operation Parameters"** on the right. enter a value in **"Current Value"**, and then click **"Settings"**

Click **"Configure Synchronization"**to synchronize the settings to other devices of the same type.

- - End

8.4.7 Setting System Parameters

step 1 Click **"Device Monitoring"** in the left navigation bar.

step 2 Select a device in the left device list in the function display area. Click **"System Parameters"** on the right. enter a value in **"Current Value"**, and then click **"Settings"**

Click **"Configure Synchronization"**to synchronize the settings to other devices of the same type.

- - End

8.4.8 Setting Protection Parameters

step 1 Click **"Monitoring"** in the left navigation bar.

step 2 Select a device in the left device list in the function display area. Click **"Protection Parameters"** on the right. enter a value in **"Current Value"**, and then click **"Settings"**

Click **"Configure Synchronization"**to synchronize the settings to other devices of the same type

- - End

8.5 Modifying Password

Click in the upper-right corner of the interface, select **Modify Password**, enter the original password and new password, and click **Save**.

The password should be a combination of 6 to 32 letters and digits.

8.6 Logout

To protect the account security, it is recommended to log out in time after the operation is completed.

Exit Method

Click and select **Logout** in the upper right corner of any interface.

9 LCD Menu Operation (Optional)

9.1 LCD TouchScreen

The eye-level LCD touchscreen inside the monitoring window on the front side of the product is used by the user to view data and set parameters.

For user convenience, there are a large number of pictures of the LCD interface are provided in this chapter. The parameters and other details in those pictures are indicative only. The actual product you receive may differ.

If the time shown on the LCD panel is different from the actual local time after time calibration, check the button cells on the back of the LCD panel and replace them if necessary.

9.2 Default Screen

9.2.1 Initialization

After the product is powered on, the LCD screen will enter the initialization screen by default. After initialization, the default screen will appear.

9.2.2 Default Screen Introduction

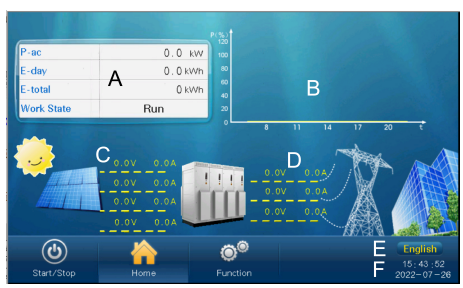

No.	Description
A	Yield data. The first line on the top indicates the present active power, and the work state is the transient state of the MV Station.
B	Today's active power curve indicating the power percentage (power value/the MV Station nominal power value).
C	DC side voltage and current of the MV Station.
D	AC side line-to-line voltage and phase current.

No.	Description
E	Language selection button. Click it to switch languages in multiple languages.
F	Present date and time.

Enter the following submenus from the default menu.

9.2.3 Backlight and Screensaver

If no operation has been performed on the screen for more than 5 minutes, the backlight will go off. Tap the screen to activate the backlight so that the latest interface reappears.

9.3 Overview of Submenu and Icon

There are three buttons on the lower left side of the touch panel: for the user to operate "Start/Stop" 

, "Home", 

, "Function" 

. The user can perform related operations via these buttons. The logical structures of these menus are shown below:

Main Menu	First sub-menu	Second sub-menu	Third sub-menu
Start/Stop	Start	-	-
	Stop	-	-
Home	-	-	-
Function	Set-parameter	Control Mode	SG1100UD
			SG2200UD
			SG3300UD
			SG4400UD

The control mode is subject to the actual product.

9.4 Setting Language

The language setting shortcut (shown by A) is at the lower right corner of the Home menu.
Select either language by tapping the language button.
By tapping the button, the language will switch among English, Chinese and the like.
The language displayed on the button is the present display language.

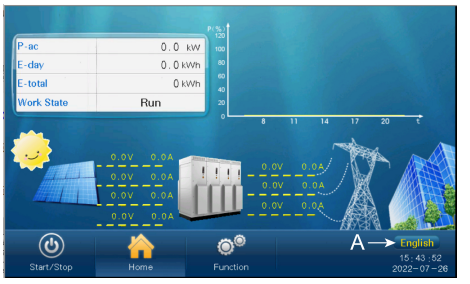

9.5 Setting Control Mode

Product control mode are protected by password.

Proceed as follows to enter the password:

step 1 Tap“**Function**”from the default menu, and the password entering window pops up.

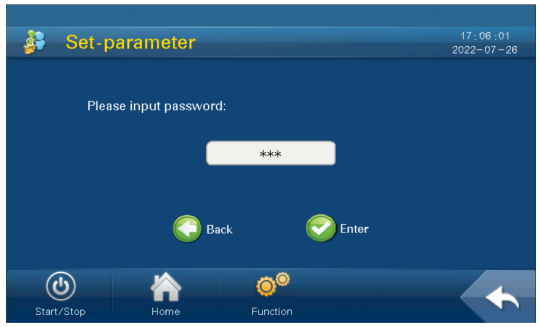

step 2 Tap the white edit box and a keypad pops up.

step 3 Enter the password 1111 through the keypad.

Button	Function
←	Backspace key, delete the digit input
Clr	Clear the digitals input
Esc	Escape and close the keypad
Enter	Confirm the password entered
Max./Min.	The maximum and minimum value can be input; digital outside this range is invalid

If the input password is correct, the parameter setting page pops up, and the user can set the control mode.

- - End

10 Troubleshooting

If the inverter fails to output as expected or the power yield changes abnormally, check the following items before consulting SUNGROW:

- The open-circuit voltage of PV arrays
- Whether the emergency stop button is pressed
- Whether the inverter limits the output of active power

If the problem still persists or there are any other questions, please contact SUNGROW. It would be helpful if the following information is provided during a call:

- Model and S/N of the inverter and internal equipment
- Manufacturer and model of the upstream PVS and PV modules that connected to the inverter
- Communication and connection scheme of the inverter
- Fault information and a brief description of the fault
- Pictures of the fault occurrence site (if on-site conditions permit)

10.1 Inverter Troubleshooting

10.1.1 Viewing Fault/Alarm Information

View the fault and alarm information referring to "8.4.2 Viewing Fault Information" and "8.4.3 Viewing Alarm Information".

10.1.2 Check Method

There are three levels of anomalies:

- Important fault: The inverter fails, shuts down, and stops grid-connected power generation.
- Secondary fault: Some parts of the inverter fail, but the inverter can still generate power in a grid-connected state.
- Prompt for fault: The inverter works normally, but its output power decreases due to external factors.

Fault Name	Fault Cause	Fault Level	Corrective Method
Module fault	The drive board generates a fault signal or a hard-ware over-current occurs.	Important	1. Check whether a short circuit occurs on the AC or DC sides of the inverter. 2. Check the grid for any exceptions. 3. Check whether the appear-ance of the internal module is normal.
Contactor fault	The contactor is faulty.	Important	Disconnect the AC and DC side switches of the inverter, and check whether the appearance of the AC contactor is obviously abnormal after the inverter is completely discharged.
AC imbalance	AC current is unbalanced.	Important	Check the grid for anomalies. Check if there is a phase loss.
Reactor over-temperature	The temperature of the reactor is excessively high.	Important	1. Use a thermometer to check whether the current ambient temperature is within the tem-perature range advertised by the inverter. 2. Check whether the air inlet of the inverter and the inverter unit is normal. Make sure that the air inlet is not blocked, and replace the filter screen if necessary. 3. In the shutdown state, check whether the internal cooling fan of the inverter is stopped by for-eign objects.

Fault Name	Fault Cause	Fault Level	Corrective Method
Control cabinet temperature fault	The temperature inside the control cabinet is excessively high	Important	1. Check whether the grid voltage is normal. 2. Check whether the control fan is normal. 3. Check the AC filter system. Check whether there are abnormalities on the surface of the AC filter capacitor, such as cracking. If necessary, check whether the three-phase current of the capacitor is balanced.
DC under-voltage	DC input voltage is excessively low.	Important	1. In the shutdown state, check whether the DC voltage displayed on the inverter is consistent with the measured value. 2. If not, check whether the DC side cables are shorted or wrongly connected.
DC (Bus) under-voltage	DC bus voltage is excessively low.	Important	Please refer to the troubleshooting method of “DC under-voltage”.
Neutral point shift	Voltage exists between the positive and negative poles of the DC side of the inverter and the neutral point potential.	Important	1. Check whether the DC side voltage of the inverter is short-circuited, whether the input voltage exceeds the allowable range, and whether the grid voltage is abnormal. 2. Check whether DC over-voltage, DC under-voltage, module fault, AC over-current, and other faults exist at the same time in the historical fault interface. If so, refer to the troubleshooting methods of related faults.

Fault Name	Fault Cause	Fault Level	Corrective Method
Abnormal temperature	If the temperature at the inverter inlet exceeds the protection threshold, this fault is triggered.	Important	1. Check whether the ambient temperature is normal; Use a thermometer to check whether the current ambient temperature is within the temperature range advertised by the inverter. 2. Check whether the air inlet of the inverter and the inverter unit is normal; Make sure that the air inlet is not blocked, and replace the filter screen if necessary. 3. In the shutdown state, check whether the cooling fan inside the inverter/inverter unit is stopped by foreign objects.
DC cabinet over-temperature	The temperature inside the DC cabinet is excessively high	Important	Refer to the troubleshooting method of “Abnormal Temperature”.
Grid over-voltage	The grid voltage is higher than the set protection value.	Important	1 Check whether the protection parameters in **Parameter Settings** -> **Protection Parameters** meet the grid standards of the location where the inverter is installed. 2 Disconnect the AC switch and measure whether the actual grid voltage is within the normal range. 3 In the shutdown state, check whether the grid voltage displayed on the inverter is consistent with the measured value.
Grid under-voltage	The grid voltage is lower than the set protection value.	Important	Refer to the troubleshooting method of "Grid over-voltage”.

Fault Name	Fault Cause	Fault Level	Corrective Method
Frequency fault	The grid frequency is abnormal.	Important	1 Check whether the protection parameters on the interface meet the grid standards of the location where the inverter is installed. 2 In the shutdown state, check whether the grid frequency displayed on the inverter is consistent with the actual value.
Islanding protection	The power grid fails or the AC instantaneous voltage exceeds the protection threshold.	Important	1. Check the grid for any exceptions. 2. Check whether a short circuit occurs on the AC side of the inverter. 3. Check whether the AC circuit breaker of the inverters is disconnected.
Control power exception	The control power is abnormal.	Important	1 Check whether the internal and external power supply control switches of the inverter are closed or disconnected at the same time. If they are closed at the same time, please disconnect one of the switches. If they are disconnected at the same time, please close one of the switches. 2 Check whether the internal and external power supply terminals are loose or poorly contacted. Tighten them if necessary.
DC voltage sampling fault	The DC voltage sampling is abnormal.	Important	In the shutdown state, check whether the DC voltage displayed on the inverter is consistent with the measured value.

Fault Name	Fault Cause	Fault Level	Corrective Method
Soft start fault	The inverter fails to start.	Important	Check whether the power grid is abnormal, such as harmonics and voltage balance.
DC SPD fault	The DC side SPD of the inverter fails.	Important	Check the status indicator of the SPD. 1. If the indicator changes from green to red, the SPD is damaged. It may be caused by local thunderstorms. Measure the AC and DC voltage and current. If voltages between the positive and negative poles to the ground are normal, replace the SPD. 2. If the indicator is normal, the SPD may be in poor contact with its holder. Replug the SPD and tighten it.
AC SPD fault	The AC side SPD of the inverter fails.	Important	1. Refer to the troubleshooting method of "DC SPD fault" to conduct preliminary troubleshooting. 2. Check whether the miniature circuit breaker is connected in series with the SPD trips. 3. If not, measure the AC and DC voltage and current. Ensure that there is no exception, and close the miniature circuit breaker again.

Fault Name	Fault Cause	Fault Level	Corrective Method
DC over-voltage	The DC side voltage of the inverter exceeds the protection threshold.	Important	Disconnect the DC switch of the inverter and check whether the open-circuit voltage of the PV arrays is normal; If not, the PV array configuration may be faulty. 2. Check and ensure that the AC side transformer is connected in a “Y” shape, and that the neutral point is not grounded. 3. In the shutdown state, check whether the DC voltage displayed on the inverter is consistent with the measured value.
PV polarity reversal	The polarity of the positive and negative poles of the PV strings is reversed.	Important	Check whether the DC side cables of the inverter are connected reversely.
Hardware fault	Inverter internal hardware fault	Important	Measure the DC voltage of the inverter and check whether a short circuit occurs in the inverter.
AC over-current	AC side current of the inverter is excessively high.	Important	1. Check whether cables on the AC and DC sides of the inverter are loose. 2. Check whether the insulation layer of cables is damaged. 3. Check whether terminals are short-circuited and grounded.
Overload protection	The output of the inverter exceeds the load limit.	Important	Refer to the troubleshooting method of "AC over-current”.
AC leakage current protection	The leakage current sampling value on the AC side of the inverter exceeds the protection threshold.	Important	1. Check whether the AC cable is damaged. 2. If the LV side of the transformer is connected in a “Y” shape, ensure that the neutral point is not connected.

Fault Name	Fault Cause	Fault Level	Corrective Method
Module over-temperature	The temperature of modules inside the inverter is excessively high.	Important	1. Check the air inlet. 2. Check whether the air outlet of the inverter is blocked. Replace the air filter screen if necessary. 3. Check whether the cooling fan is running during the operation of the inverter.
Fan/ Fan 2 exception	Fan/fan 2 inside the inverter fails.	Important	1. Check whether the grid voltage is normal. Use a multimeter to measure the grid voltage and check for phase loss. 2. Check whether the power supply of the cooling fan is normal. Use a multimeter to measure the three-phase power supply to ensure that the rated input voltage is 400 Vac.
Grounding fault	A grounding fault occurs.	Important	1 Check the DC cables. Check whether the positive grounding cable of each DC branch is damaged. Check whether the DC cable resistance to the ground is normal. 2 Check AC cables. Measure the three-phase voltage to ground and observe whether the voltage value is the same. Check the inverter and the box-type substation side SPD for damage.

Fault Name	Fault Cause	Fault Level	Corrective Method
AC switch fault	AC switch fails.	Important	1. Check whether the AC switch trips. 2. Check whether the appearance of the switch is normal. 3. Check whether the AC switch can be normally closed/disconnected. 4. Use a multimeter to measure whether the AC switch normally controls the on/off of the circuit.
Heat sink over-temperature	The temperature of the heat sink inside the inverter is excessively high.	Important	Check whether the cooling fan is normal. If so, check the air duct for blockage.
GFDI-pro	The DC grounding protection fails.	Important	1. The negative terminal of the inverter is not reliably grounded. 2. Check whether the negative grounding fuse is blown.
AC fuse fault	The fuse on the AC side of the inverter fails.	Important	Check whether the AC fuse is normal.
Grid voltage imbalance	Grid voltage is unbalanced.	Important	Measure the grid voltage and check for any imbalance.
Current Imbalance 2/Current Imbalance 3	The alternating current is unbalanced.	Important	Measure the grid voltage and check for phase loss.
AC cabinet over-temperature	The temperature of the AC cabinet exceeds the protection threshold.	Important	1. Check whether the fans inside the AC cabinet work normally. 2. Check whether the air inlet of the AC cabinet is blocked. 3. Check whether there is dust in the air inlet of the AC cabinet. Clean it if necessary.
DC fuse anomaly	The fuse on the DC side of the inverter fails.	Secondary	Check whether the DC fuse is blown. If so, please contact SUNGROW to replace the fuse.

Fault Name	Fault Cause	Fault Level	Corrective Method
Anti-PID power abnormality	The anti-PID power is abnormal.	Secondary	1. Check the insulation of AC cables. 2. Check the AC SPD. 3. Check and make sure that the neutral point on the LV side of the box-type substation is not grounded.
External power supply abnormal	The external power supply is abnormal.	Secondary	Use a multimeter to measure and check whether the voltage of the external power supply is abnormal.
Branch air switch abnormal	The air switch of the DC branch of the inverter is abnormal.	Secondary	Check whether the branch air switches are all closed, and check whether the state of them is **Closed** on the interface.
CT imbalance	The three-phase grid current is out of balance.	Secondary	Check whether the three-phase AC current is balanced on the interface.
Grounding fuse anomaly	The grounding fuse is abnormal.	Secondary	Remove the negative grounding fuse after the inverter is fully discharged. Check whether this fuse is blown. If so, check whether the neutral point of the transformer is not connected and whether the neutral point of PT/CT on the LV side of the box-type substation is grounded.
Meter communication abnormal alarm	The meter communication is abnormal.	Secondary	1. Check whether the communication cable of the meter is damaged. 2. Check the communication terminal of the meter is loose.
DC fuse fault	The fuse on the DC side of the inverter fails.	Secondary	Check whether the DC fuse is blown. If so, please contact SUNGROW to replace the fuse.

Fault Name	Fault Cause	Fault Level	Corrective Method
Branch fuse abnormal	The branch fuse of the inverter is abnormal.	Secondary	Please refer to the troubleshooting method of “DC fuse fault”.
Low insulation resistance	The insulation resistance is low.	Secondary	Please refer to the troubleshooting method of “Insulation resistance”.
DC switch anomaly	The DC switch of the inverter is abnormal.	Secondary	Check whether the branch air switches are all closed, and check whether the state of them is **Closed** on the interface.
Frequency deviation active power regulation	The active power of the inverter is regulated according to the change of the grid frequency.	Prompt	Check whether the power reduction at over-frequency is enabled on the interface. If so, it indicates that over-frequency occurs during operation.
Voltage deviation reactive power regulation	The reactive power of the inverter is regulated according to the change of the grid voltage.	Prompt	Check whether the reactive power regulation is set to **QU Mode** on the interface.
GFRT operation	The inverter runs through high voltage and low voltage.	Prompt	Check whether the grid voltage exceeds the set threshold of HVRT or LVRT.

If the fault/alarm cannot be cleared following the above corrective methods and still persists, please contact SUNGROW directly.

Fault Name	Fault Cause	Fault Level	Corrective Method
AC switch off	The AC switch is disconnected.	Important	Please contact SUNGROW.
Carrier sync flt	The carrier signal transmission is abnormal.	Important	Please contact SUNGROW.
Drive board fault	The drive board inside the inverter fails.	Important	Please contact SUNGROW.
Parallel machine communication failure	The communication inside the inverter is abnormal.	Important	Please contact SUNGROW.

Fault Name	Fault Cause	Fault Level	Corrective Method
Machine code repetition fault	The addresses of the inverter units inside the inverter are the same.	Important	Please contact SUNGROW.
Temperature and humidity board communication abnormal	The communication of the temperature and humidity board is abnormal.	Secondary	Please contact SUNGROW.
Branch reverse over-current	The branch reverse current is excessively large.	Secondary	Please contact SUNGROW.
DSP communication exception	The communication between inverter internal control board and smart unit board is abnormal.	Secondary	Please contact SUNGROW.

10.2 Other Faults

Fault Detail	Possible Cause	Corrective Method
The inverter shuts down shortly after startup	The DC input voltage is just enough to start the inverter. If the inverter is connected to loads, and the voltage cannot meet the requirements, causing the inverter to shut down.	Design and connect the battery panel series based on the recommended open-circuit voltage, increase the DC voltage input, and avoid applying the critical voltage value.
Upper computer communication failure	There are many possible reasons, please check one by one according to the description of "Corrective Method".	Check whether the local address, baud rate, and other parameters on the interface are consistent with those on the host computer. Check whether all wiring is good. If RS485 communication is adopted, check whether the A and B terminals are connected reversely. Replace the communication adapter and try again if the communication adapter does not match. If the fault is not caused by the foregoing reasons and still persists, please contact SUNGROW as soon as possible.
WiFi connection unresponsive/failed	Equipment is not compatible.	1. Refresh the Web page manually. 2. Restart or replace the mobile device and try connecting again. 3. Power off and restart the inverter to connect again.

Fault Detail	Possible Cause	Corrective Method
Failed is displayed on the operation or protection parameter setting interfaces	There are many possible reasons, please check one by one according to the description of "Corrective Method".	1. Check whether an inverter unit cannot work normally. 2. Check whether the inverter unit that works normally can normally accept instructions. 3. Please refer to the troubleshooting method of “DSP communication fault”. If the fault is not caused by the foregoing reasons and still persists, please contact SUNGROW as soon as possible.
Fail to export measuring point logs in batches	The amount of data exported at a single time is too large.	1. Export data in batches multiple times. 2. The time interval for exporting data shall not exceed 7 days.

11 Routine Maintenance

11.1 Safety Instructions

DANGER

Risk of inverter damage or personal injury due to incorrect service!

- **Disconnect the switches between the product and all power supplies before maintenance.**
- **After the inverter is powered off for 20 minutes, measure the voltage and current with measuring equipment. Only when there is no voltage nor current can operators who wear protective equipment operate and maintain the inverter.**

DANGER

The devices inside the inverter carry high voltage. Touching these devices may lead to fatal electric shock.

Therefore,

- **Live line measurement can only be performed by professional personnel who know the PV system well. Before measurement, be sure to take proper protection methods (e.g., wear insulating gloves, etc.).**
- **During live line measurement, the operator must be accompanied by others to ensure personal safety.**

DANGER

Electric shock or fire may occur due to device damage or system fault.

- **Visually inspect for device damages or other hazards before the operation**
- **Check whether other external devices or circuit connections are in a safe state.**
- **Make sure the device is in a safe state before operating.**

⚠ WARNING

If some devices need to be replaced during operation and maintenance, please contact SUNGROW.

Do not open the door to maintain the product on rainy, humid, or windy days. SUNGROW shall not be held liable for any damage caused by a violation of the notice.

For products with long downtime, a comprehensive and detailed inspection of the products must be carried out before powering up the product. First, the product and internal equipment as well as the film at the air inlet and outlet need to be checked for intactness. Then the product should be checked and tested by professionals before commissioning.

⚠ WARNING

Do not open the door to maintain the product on rainy, humid, or windy days. SUNGROW shall not be held liable for any damage caused by a violation of the notice.

⚠ WARNING

Wait for at least 20 minutes after shutdown and then open the cabinet door. Make sure that the inside of the product is completely uncharged before maintaining the product.

NOTICE

Do not leave screws, washers, or other metal parts in the inverter after the maintenance work. Otherwise, damage may be caused to the product!

NOTICE

To avoid the risk of electric shock, do not perform any other maintenance operations beyond those described in this manual. If necessary, contact SUNGROW for maintenance. Otherwise, the losses caused are not covered by the warranty.

⚠ CAUTION

To prevent misuse or accidents caused by unrelated personnel, post prominent warning signs or demarcate safety warning areas around the device to prevent accidents caused by misuse.

11.2 Maintenance Period

11.2.1 Maintenance (Every two years)

Item	Check method
System status and cleaning	Check the following items, and correct immediately those failing to meet the relevant requirements: • Check whether there is any damage or deformation of the inverter and internal equipment. • Check if there is abnormal noise during the operation of internal equipment. • Check whether the temperature inside the inverter is excessively high. • Check whether the humidity and the amount of dust inside the inverter are within the normal range. Clean it if necessary. • Check whether the air inlet and outlet of the inverter are blocked.
Warning marks	Check whether the warning labels and marks are clearly visible and free of stains and damage. Replace them if necessary.
Ground of the shielded layer of cables	Check whether the cable shielding layer is in good contact with the insulation sleeve and whether the copper bus bar is firmly fixed.
Wiring between the terminal box and switch *	Check whether the terminal box and the switch are connected correctly.
SPD and fuse	Check whether the SPD and fuse are properly fastened.
Corrosion	Check whether there is oxidation or rust inside the inverter.

Note: * means optional.

11.2.2 Maintenance (Once A Year)

Item	Check method
Exterior of the inverter	Check the following items, and correct immediately those failing to meet relevant requirements: • Check whether there are flammable objects on the top of the inverter. • Check whether the welding points between the inverter and foundation steel plate are firm and if there is corrosion. • Check whether the enclosure of the inverter is damaged, painted, or oxidized. • Check whether the monitoring window and cabinet door can be opened flexibly. • Check whether the sealing strip is fixed properly.
Interior of the inverter	Check whether there are foreign objects, dust, dirt, and condensed water inside the inverter.
Wiring and cable layout	Start to inspect after completely powering down the internal devices of the inverter. For any non-conformances found during the inspection, correct them immediately. • Check whether the cable layout is normal and whether there is a short circuit. For any non-conformances found during the inspection, correct them immediately. • Check whether all inlet and outlet holes of the inverter are well sealed. • Check whether water leaks into the inverter. • Check whether the power cables are loose, and fasten them again by the torque specified previously. • Check whether the power cables and control cables are damaged, especially the part in contact with the metal enclosure. • Check whether the insulation tapes on the power cable terminals fell off.
Ground connection and equipotential connection	• Check whether the ground connection is correct and the grounding resistance shall be no more than 4 Ω. • Check whether the internal equipotential connection is correct.
Fan	• Check the running status of fans. • Check whether the fan blade rotates smoothly. • Check whether there is abnormal noise during the operation of the fans.

Item	Check method
Screw	Check whether internal screws fell off.
Exterior of the inverter	Check the following items, and correct immediately those failing to meet relevant requirements: • Check whether there are flammable objects on the top of the inverter. • Check whether the welding points between the inverter and foundation steel plate are firm and if there is corrosion. • Check whether the enclosure of the inverter is damaged, painted, or oxidized. • Check whether the monitoring window and cabinet door can be opened flexibly. • Check whether the sealing strip is fixed properly.

11.2.3 Maintenance (Every half a year to once a year)

Item	Check method
Safety function	• Check whether the shutdown key on the touchscreen and the e-stop button work normally. • Simulate shutdown. • Check the warning marks and other device marks, and replace them timely if they are fuzzy or damaged.
Software maintenance	Check the settable parameters on the touchscreen.
Internal components inspection	• Check whether the circuit board and other components are clean. • Check the temperature of the heat sink and the amount of dust accumulated. Clean heat-dissipation modules with a vacuum cleaner if necessary. • Replace the air filter screen if necessary. Note! Be sure to check the ventilation of the air inlet. Otherwise, the fault may be caused due to overheating if the module cannot be cooled effectively.

Item	Check method
Air inlet and outlet	Check the temperature of the heat sink and the amount of dust accumulated. Clean heat-dissipation modules with a vacuum cleaner if necessary.
Device maintenance	• Carry out regular inspection for corrosion of all metal components. • Check the contactor to ensure a normal mechanical operation. • Check the operation parameters (especially voltage and insulation).

The recommended routine maintenance periods in the table are only for reference. The actual maintenance period shall be determined reasonably in consideration of the specific installation environment of the product.

Power plant scale, location, site environment, and other factors also affect the maintenance period of the product. It is necessary to shorten the maintenance period and increase the maintenance frequency in the event of a heavy sandstorm or dust in the operating environment.

11.3 Common Maintenance Items

It is recommended to clean the inverter once every six months. If the inverter works in harsh environments, such as desert areas, the maintenance cycle should be shortened.

11.3.1 Cleaning Higher Air Inlet and Outlet

Over View

The following figure shows the heat dissipation mode of the inverter. The air inlet is located at the lower and higher parts of the AC cabinet while the air outlet is located at the lower and higher parts of the DC cabinet.

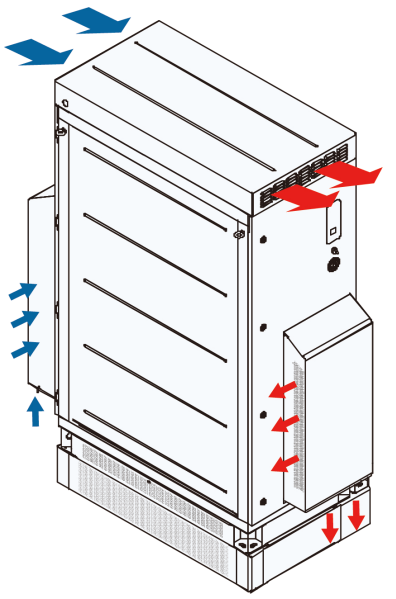

Procedure

step 1 Unscrew the M5 screws at the four corners of the air inlet and outlet.

step 2 Clean the air inlet and outlet with a brush.

step 3 Fix the air inlet and outlet with the M5 screws with a tightening torque of 4 - 4.8 N·m.

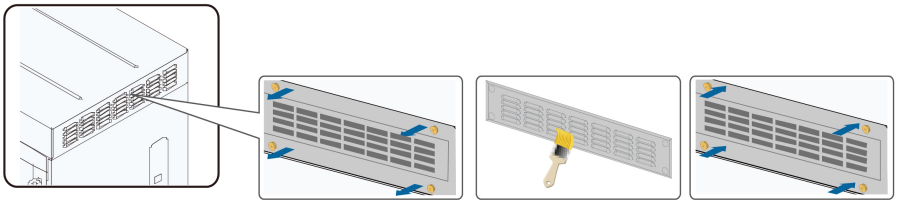

- - End

11.3.2 Cleaning Lower Air Inlet and Outlet

The cleaning method of the lower air inlet and outlet includes removing the protective plate from the side and removing the protective plate from the bottom. The cleaning method is subject to the specific product.

11.3.2.1 Side Dismantling of Protective Cover

step 1 Open the cabinet door, remove the screws on the protective cover, and remove the protective cover.

step 2 Remove the screws on the water baffle and remove the water baffle.

step 3 Remove the side wire mesh and clean it.

step 4 Remove the bottom wire mesh of the protective cover and clean it.

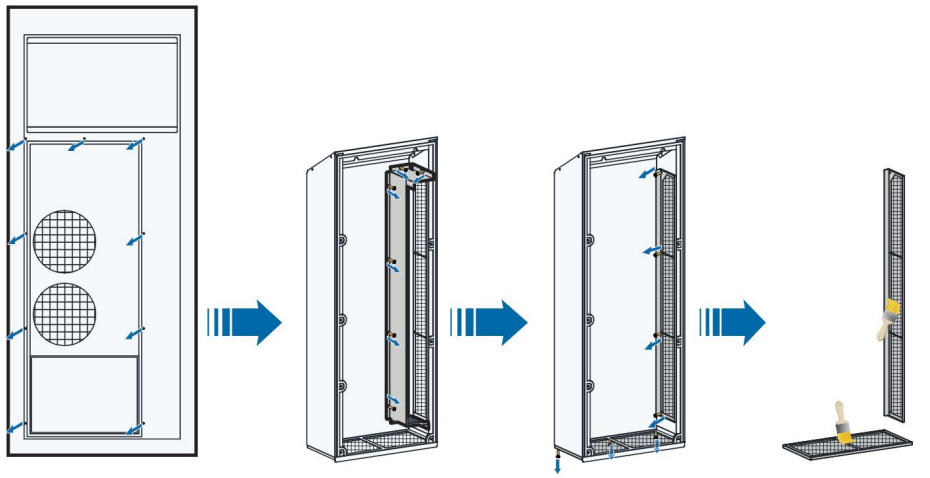

step 5 Re-install the bottom wire mesh, side wire mesh, and protective cover to the cabinet door in reverse steps.

- - End

11.3.2.2 Bottom Dismantling of Protective Cover

step 1 Use screwdriver to unscrew the 7 bolts at the bottom of the protective cover.

step 2 Remove the bottom wire mesh and clean it.

step 3 Pull out the side wire mesh and clean it.

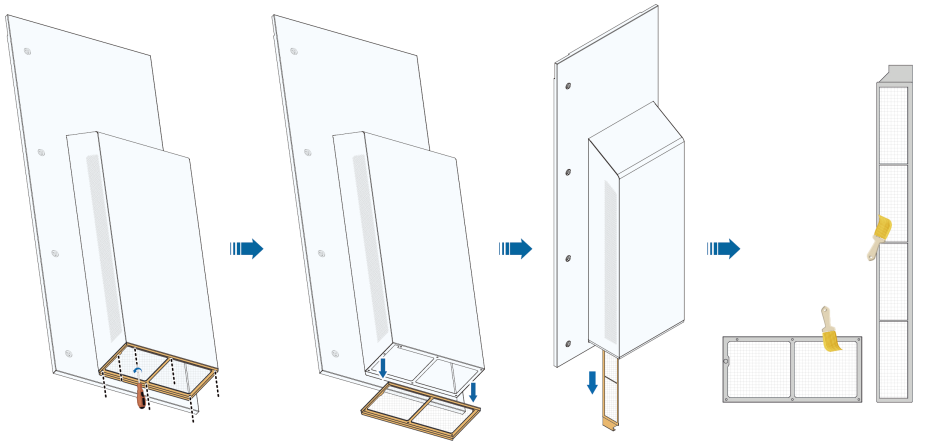

step 4 Re-install the bottom wire mesh and side wire mesh to the cabinet door in reverse steps.

- - End

11.3.3 Appearance Repair

Check the appearance of the product:

Case 1: Erasable traces

Case 2: Indelible traces

Case 3: Broken primer

Check whether the protective paint sprayed on the casing of the product fell off or peeled off. If so, repair it timely.

Spray a special protective paint to the exterior of the product every 5 years.

11.3.3.1 Erasable Traces

Tools

No.	Name	Source
1	Cleaning cloth	Beyond the scope of supply
2	Water	
3	Alcohol or other non-corrosive detergents	

step 1 Wet the cleaning cloth (or other scrubbing tools) with water, and scrub the dirty parts on the surface.

step 2 If the dirt cannot be cleaned with water, scrub with 97% alcohol till the surface is acceptable. (Or try to use non-corrosive detergents that are generally used locally)

- - End

11.3.3.2 Indelible Traces

Tools

No.	Name	Source
1	Abrasive paper	Beyond the scope of supply
2	Cleaning cloth	
3	Water	
4	Alcohol	
5	Brush	
6	RAL7035 oil paint	

step 1 Polish the paint surface with blistering or scratches with abrasive paper for a smooth surface.

step 2 Wet the cleaning cloth with water or 97% alcohol, and scrub the damaged parts to remove surface stains.

step 3 Perform paint repair for the scratched parts with a soft brush after the surface is dried; brush the paint as uniform as possible.



- - End

11.3.3.3 Broken Primer

Tools

No.	Name	Source
1	Abrasive paper	Beyond the scope of supply
2	Cleaning cloth	
3	Water	
4	Alcohol	
5	Zinc primer	
6	Brush	
7	RAL7035 oil paint	

step 1 Polish the damaged parts with abrasive paper to remove rust and other burrs for a smooth surface.

step 2 Wet the cleaning cloth with water or 97% alcohol, and scrub the damaged parts to remove surface stains and dust.

step 3 Spray the parts with base material exposed with zinc primer for protection after drying the surface. Ensure to spray to cover the bare base material completely.

step 4 Perform paint repair for the damaged parts with a soft brush after the primer is dried, and brush the paint uniformly.



- - End

11.3.4 Checking Door Locks and Hinges

Check if the door locks and hinges of the inverter can be used normally after cleaning. Lubricate the door lock holes and hinges properly if necessary.

11.3.5 Checking Sealing Strips

If the sealing strip is in good condition, it can effectively prevent water seepage inside the product. Therefore, carefully check the sealing strip and replace it immediately if there is any damage.

11.4 Replacing DC Side Fuse

11.4.1 Preparation Before Replacing DC Side Fuse

step 1 Power off the inverter according to the normal shutdown steps.

step 2 Wait for 20 minutes for the internal capacitors to be completely discharged.

step 3 Use a multimeter with a range of 1500 Vdc to measure the DC side voltage of the inverter. Check and ensure that the positive voltage, negative voltage, positive to ground voltage, and negative to ground voltage are all zero.

step 4 Unlock the DC cabinet door and remove the protective cover on the DC fuse.

step 5 Use a multimeter to measure each DC input voltage and ensure that the terminals are uncharged before performing the next operation.

step 6 Replace the faulty fuse.

- - End

11.4.2 Procedure

step 1 Identify the faulty fuse.

step 2 Use a socket wrench to unscrew the fastening bolt of the fuse to be replaced.

step 3 Remove the faulty fuse.

step 4 Secure the new fuse with M8×30 bolts with a tightening torque of 18 - 23 N.m.

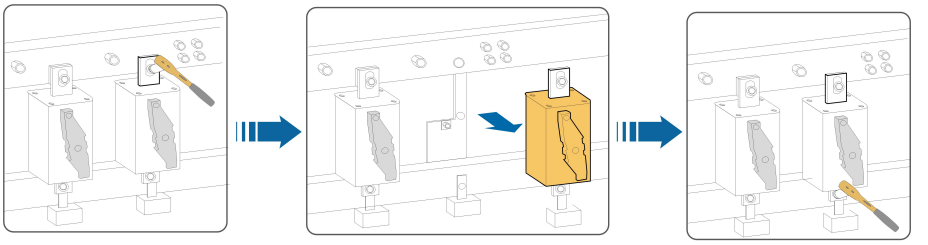

- - End

12 Appendix

12.1 Technical Parameters

SG1100UD/SG2200UD

Type designation	SG1100UD	SG2200UD
Input (DC)		
Max. PV input voltage	1500 V	
Min. PV input voltage / Startup input voltage	895 V / 905 V	
MPP voltage range	895 – 1500 V	
No. of independent MPP inputs	1	2
No. of DC inputs	5(optional: 6/7 inputs negative grounding)	10(optional: 12/14 inputs negative grounding)
Max. PV input current	1435 A	2 × 1435 A
Max. DC short-circuit current	5000 A	2 × 5000 A
PV array configuration	Negative grounding or floating	
Output (AC)		
AC output power	1100 kVA @ 40 ℃, 1265kVA @ 20 ℃	2200 kVA @ 40 ℃, 2530kVA @ 20 ℃
Max. AC output current	1160 A	2 × 1160 A
Nominal AC voltage	630 V	
AC voltage range	536 – 693 V	
Nominal grid frequency / Grid frequency range	50 Hz / 45 – 55 Hz, 60 Hz / 55 – 65 Hz	
Harmonic (THD)	< 3% (at nominal power)	
Power factor at nominal power / Adjustable power factor	> 0.99 / 0.8 leading – 0.8 lagging	
Feed-in phases / AC connection	3 / 3-PE	
Efficiency		
Max. efficiency / European efficiency	99.0 % / 98.7 %	
Protection & Function		

DC input protection	Load break switch + fuse	
AC output protection	Circuit breaker	
Overvoltage protection	DC Type II / AC Type II	
Grid monitoring/Grounding fault protection	Yes / Yes	
Insulation monitoring	Yes	
Surge protection	Yes	
Q at night function	Optional	
General Data		
Dimensions (width x height x depth) *	700 × 2140 × 1700 mm	1415 × 2235 × 1690 mm
Weight *	800 kg	1800 kg
Topology	Transformerless	
Degree of protection	IP65	
Night power consumption	< 200 W	
Operating ambient temperature range	-35 to 60 ℃ (> 40 ℃ derating)	
Allowable relative humidity range	0 - 100%	
Cooling method	Temperature controlled forced air cooling	
Max. operating altitude	4000 m (> 3000 m derating)	
Display	LED Indicators, WLAN+WebHMI	
Communication	Standard: RS485, Ethernet; Optional: optical fiber	
Grid support	Q at night function (optional), L/HVRT, active & reactive power control and power ramp rate control, Q-U control, P-f control	

SG3300UD/SG4400UD

Type designation	SG3300UD	SG4400UD
Input (DC)		
Max. PV input voltage	1500 V	
Min. PV input voltage / Startup input voltage	895 V / 905 V	
MPP voltage range	895 – 1500 V	
No. of independent MPP inputs	3	4
No. of DC inputs	15(optional: 18/21 inputs negative grounding)	20(optional: 24/28 inputs negative grounding)
Max. PV input current	3 × 1435 A	4 × 1435 A

Max. DC short-circuit current	3 x 5000 A	4 x 5000 A
PV array configuration	Negative grounding or floating	
Output (AC)		
AC output power	3300 kVA @ 40 ℃, 3795 kVA @ 20 ℃	4400 kVA @ 40 ℃, 5060 kVA @ 20 ℃
Max. AC output current	3 × 1160 A	4 × 1160 A
Nominal AC voltage	630 V	
AC voltage range	536 – 693 V	
Nominal grid frequency / Grid frequency range	50 Hz / 45 – 55 Hz, 60 Hz / 55 – 65 Hz	
Harmonic (THD)	< 3% (at nominal power)	
Power factor at nominal power / Adjustable power factor	> 0.99 / 0.8 leading – 0.8 lagging	
Feed-in phases / AC connection	3 / 3-PE	
Efficiency		
Max. efficiency / European efficiency	99.0 % / 98.7 %	
Protection & Function		
DC input protection	Load break switch + fuse	
AC output protection	Circuit breaker	
Overvoltage protection	DC Type II / AC Type II	
Grid monitoring/Grounding fault protection	Yes / Yes	
Insulation monitoring	Yes	
Surge protection	Yes	
Q at night function	Optional	
General Data		
Dimensions (width x height x depth) *	2130×2235×1690 mm	2845×2235×1690 mm
Weight *	≤2.5 T	≤3.3 T
Topology	Transformerless	
Degree of protection	IP65	
Night power consumption	< 200 W	
Operating ambient temperature range	-35 to 60 ℃ (> 40 ℃ derating)	

Allowable relative humidity range	0 - 100%
Cooling method	Temperature controlled forced air cooling
Max. operating altitude	4000 m (> 3000 m der ating)
Display	LED Indicators, WLAN+WebHMI
Communication	Standard: RS485, Ethernet; Optional: optical fiber
Grid support	Q at night function (optional), L/HVRT, active & reactive power control and power ramp rate control, Q-U control, P-f control

SG1100UD-20/SG1100UD-21

Type designation	**SG1100UD-20**	**SG1100UD-21**
Input (DC)		
Max. PV input voltage	1500 V	
Min. PV input voltage / Startup input voltage	938 V / 950 V	
MPP voltage range	938 – 1500 V	
No. of independent MPP inputs	1	
No. of DC inputs	5(optional: 6/7 inputs negative grounding)	
Max. PV input current	1435 A	
Max. DC short-circuit current	5000 A	
PV array configuration	Negative grounding or floating	
Output (AC)		
AC output power	1100 kVA @ 50 ℃, 1320 kVA @ 20 ℃	1070 kVA @ 50 ℃, 1320 kVA @ 20 ℃
Max. AC output current	1155 A	
Nominal AC voltage	660 V	
AC voltage range	561 – 726 V	
Nominal grid frequency / Grid frequency range	50 Hz / 45 – 55 Hz, 60 Hz / 55 – 65 Hz	
Harmonic (THD)	< 3% (at nominal power)	
Power factor at nominal power / Adjustable power factor	> 0.99 / 0.8 leading – 0.8 lagging	
Feed-in phases / AC connection	3 / 3-PE	
Efficiency		

Max. efficiency / European efficiency	99.0 % / 98.7 %
Protection & Function	
DC input protection	Load break switch + fuse
AC output protection	Circuit breaker
Overvoltage protection	DC Type II / AC Type II
Grid monitoring/Grounding fault protection	Yes / Yes
Insulation monitoring	Yes
Surge protection	Yes
Q at night function	Optional
General Data	
Dimensions (width x height x depth) *	700 × 2140 × 1700 mm
Weight *	800 kg
Topology	Transformerless
Degree of protection	IP65
Night power consumption	< 200 W
Operating ambient temperature range	-35 to 60 ℃ (> 50 ℃ derating)
Allowable relative humidity range	0 - 100%
Cooling method	Temperature controlled forced air cooling
Max. operating altitude	4000 m (> 3000 m derating)
Display	LED Indicators, WLAN+WebHMI
Communication	Standard: RS485, Ethernet; Optional: optical fiber
Grid support	Q at night function (optional), L/HVRT, active & reactive power control and power ramp rate control

SG2200UD-20/SG2200UD-21

Type designation	**SG2200UD-20**	**SG2200UD-21**
Input (DC)		
Max. PV input voltage	1500 V	
Min. PV input voltage / Startup input voltage	938 V / 950 V	
MPP voltage range	938 – 1500 V	
No. of independent MPP inputs	2	
No. of DC inputs	10(optional: 12/14 inputs negative grounding)	

Max. PV input current	2 × 1435 A	
Max. DC short-circuit current	2 × 5000 A	
PV array configuration	Negative grounding or floating	
Output (AC)		
AC output power	2200 kVA @ 50 ℃, 2640 kVA @ 20 ℃	2140 kVA @ 50 ℃, 2640 kVA @ 20 ℃
Max. AC output current	2 × 1155 A	
Nominal AC voltage	660 V	
AC voltage range	561 – 726 V	
Nominal grid frequency / Grid frequency range	50 Hz / 45 – 55 Hz, 60 Hz / 55 – 65 Hz	
Harmonic (THD)	< 3% (at nominal power)	
Power factor at nominal power / Adjustable power factor	> 0.99 / 0.8 leading – 0.8 lagging	
Feed-in phases / AC connection	3 / 3-PE	
Efficiency		
Max. efficiency / European efficiency	99.0 % / 98.7 %	
Protection & Function		
DC input protection	Load break switch + fuse	
AC output protection	Circuit breaker	
Overvoltage protection	DC Type II / AC Type II	
Grid monitoring/Grounding fault protection	Yes / Yes	
Insulation monitoring	Yes	
Surge protection	Yes	
Q at night function	Optional	
General Data		
Dimensions (width x height x depth) *	1415 × 2235 × 1690 mm	
Weight *	1800 kg	
Topology	Transformerless	
Degree of protection	IP65	
Night power consumption	< 200 W	
Operating ambient temperature range	-35 to 60 ℃ (> 50 ℃ derating)	

Allowable relative humidity range	0 - 100%
Cooling method	Temperature controlled forced air cooling
Max. operating altitude	4000 m (> 3000 m derating)
Display	LED Indicators, WLAN+WebHMI
Communication	Standard: RS485, Ethernet; Optional: optical fiber
Grid support	Q at night function (optional), L/HVRT, active & reactive power control and power ramp rate control

*: The actual product received shall prevail.

*: The actual product received shall prevail.

SG3300UD-20/SG3300UD-21

Type designation	**SG3300UD-20**	**SG3300UD-21**
Input (DC)		
Max. PV input voltage	1500 V	
Min. PV input voltage / Startup input voltage	938 V / 950 V	
MPP voltage range	938 – 1500 V	
No. of independent MPP inputs	3	
No. of DC inputs	15(optional: 18/21 inputs negative grounding)	
Max. PV input current	3 × 1435 A	
Max. DC short-circuit current	3 x 5000 A	
PV array configuration	Negative grounding or floating	
Output (AC)		
AC output power	3300 kVA @ 50 ℃, 3960 kVA @ 20 ℃	3210 kVA @ 50 ℃, 3960 kVA @ 20 ℃
Max. AC output current	3 × 1155 A	
Nominal AC voltage	660 V	
AC voltage range	561 – 726 V	
Nominal grid frequency / Grid frequency range	50 Hz / 45 – 55 Hz, 60 Hz / 55 – 65 Hz	
Harmonic (THD)	< 3% (at nominal power)	
Power factor at nominal power / Adjustable power factor	> 0.99 / 0.8 leading – 0.8 lagging	
Feed-in phases / AC connection	3 / 3-PE	
Efficiency		

Max. efficiency / European efficiency	99.0 % / 98.7 %
Protection & Function	
DC input protection	Load break switch + fuse
AC output protection	Circuit breaker
Overvoltage protection	DC Type II / AC Type II
Grid monitoring/Grounding fault protection	Yes / Yes
Insulation monitoring	Yes
Surge protection	Yes
Q at night function	Optional
General Data	
Dimensions (width x height x depth) *	2130×2235×1690 mm
Weight *	2.5 T
Topology	Transformerless
Degree of protection	IP65
Night power consumption	< 200 W
Operating ambient temperature range	-35 to 60 ℃ (> 50 ℃ derating)
Allowable relative humidity range	0 - 100%
Cooling method	Temperature controlled forced air cooling
Max. operating altitude	4000 m (> 3000 m der ating)
Display	LED Indicators, WLAN+WebHMI
Communication	Standard: RS485, Ethernet; Optional: optical fiber
Grid support	Q at night function (optional), L/HVRT, active & reactive power control and power ramp rate control

*: The actual product received shall prevail.

SG4400UD-20/SG4400UD-21

Type designation	**SG4400UD-20**	**SG4400UD-21**
Input (DC)		
Max. PV input voltage	1500 V	
Min. PV input voltage / Startup input voltage	938 V / 950 V	
MPP voltage range	938 – 1500 V	
No. of independent MPP inputs	4	

No. of DC inputs	20 (optional: 24/28 inputs negative grounding)	
Max. PV input current	4 × 1435 A	
Max. DC short-circuit current	4 x 5000 A	
PV array configuration	Negative grounding or floating	
Output (AC)		
AC output power	4400 kVA @ 50 ℃, 5280 kVA @ 20 ℃	4280 kVA @ 50 ℃, 5280 kVA @ 20 ℃
Max. AC output current	4 × 1155 A	
Nominal AC voltage	660 V	
AC voltage range	561 – 726 V	
Nominal grid frequency / Grid frequency range	50 Hz / 45 – 55 Hz, 60 Hz / 55 – 65 Hz	
Harmonic (THD)	< 3% (at nominal power)	
Power factor at nominal power / Adjustable power factor	> 0.99 / 0.8 leading – 0.8 lagging	
Feed-in phases / AC connection	3 / 3-PE	
Efficiency		
Max. efficiency / European efficiency	99.0 % / 98.7 %	
Protection & Function		
DC input protection	Load break switch + fuse	
AC output protection	Circuit breaker	
Overvoltage protection	DC Type II / AC Type II	
Grid monitoring/Grounding fault protection	Yes / Yes	
Insulation monitoring	Yes	
Surge protection	Yes	
Q at night function	Optional	
General Data		
Dimensions (width x height x depth) *	2845×2235×1690 mm	
Weight *	3.3 T	
Topology	Transformerless	
Degree of protection	IP65	
Night power consumption	< 200 W	

Operating ambient temperature range	-35 to 60 ℃ (> 50 ℃ derating)
Allowable relative humidity range	0 - 100%
Cooling method	Temperature controlled forced air cooling
Max. operating altitude	4000 m (> 3000 m der ating)
Display	LED Indicators, WLAN+WebHMI
Communication	Standard: RS485, Ethernet; Optional: optical fiber
Grid support	Q at night function (optional), L/HVRT, active & reactive power control and power ramp rate control

*: The actual product received shall prevail.

12.2 Tightening Torques

Tighten the cable with proper torque shown below to prevent the poor contact, high contact resistance, or fire caused by the looseness of cable lugs:

Bolt	Torque(N·m)	Bolt	Torque(N·m)
M3	0.7~1	M8	18~23
M4	1.8~2.4	M10	34~40
M5	4~4.8	M12	60~70
M6	7~8	M16	119~140

Secure the cable in proper place to reduce pressure of cable lug.

12.3 Quality Assurance

When product faults occur during the warranty period, SUNGROW will provide free service or replace the product with a new one.

Evidence

During the warranty period, the customer shall provide the product purchase invoice and date. In addition, the trademark on the product shall be undamaged and legible. Otherwise, SUNGROW has the right to refuse to honor the quality guarantee.

Conditions

- After replacement, unqualified products shall be processed by SUNGROW.
- The customer shall give SUNGROW a reasonable period to repair the faulty device.

Exclusion of Liability

In the following circumstances, SUNGROW has the right to refuse to honor the quality guarantee:

- The free warranty period for the whole machine/components has expired.

- The device is damaged during transport.
- The device is incorrectly installed, refitted, or used.
- The device operates in harsh conditions beyond those described in this manual.
- The fault or damage is caused by installation, repairs, modification, or disassembly performed by a service provider or personnel not from SUNGROW.
- The fault or damage is caused by the use of non-standard or non-SUNGROW components or software.
- The installation and use range are beyond stipulations of relevant international standards.
- The damage is caused by unexpected natural factors.

For faulty products in any of above cases, if the customer requests maintenance, paid maintenance service may be provided based on the judgment of SUNGROW.

12.4 Contact Information

In case of questions about this product, please contact us.

We need the following information to provide you the best assistance:

- Model of the device
- Serial number of the device
- Fault code/name
- Brief description of the problem

For detailed contact information, please visit: **https://en.sungrowpower.com/contactUS**.

SUNGROW

Sungrow Power Supply Co., Ltd.

www.sungrowpower.com

M-D-000259