sunways

AU

User Manual

Grid-connected Inverter

STS 3~6KTL (-P)

SUNWAYS TECHNOLOGIES CO., LTD.

sunways

CONTENTS

1 Preface 5
1.1 Overview 5
1.2 Target Groups 5
2 Safety Instructions 6
2.1 Safety Notes 6
2.2 Statement 6
2.3 Important Safety Matters 7
2.4 Symbols Explanation 8
3 Product Description 11
3.1 Basic Features 11
3.2 Physical Layout 12
3.3 Display Interface 14
3.4 Packing List 15
4 Installation 18
4.1 Location 18
4.2Mounting 20
4.3 External ground connection 23
4.4 Electrical Connection 24
4.5 Monitoring Device Installation 31
4.6 CT/RS485/DRED Connection 32
5 Start and Stop 36
5.1 Start the Inverter 36
5.2 Stop the Inverter 37
6 General Operation 38
6.1 Display Operation 38
6.2 Country Code (Safety Code) Setting 40
6.3 Grid Protection Setting 41
6.4 Power Quality Response Modes 41
6.5 Fix power factor setting 42
6.6 Power Rate Limit Settings 43
6.7 Export Limit and Generation Limit 44
6.8 Online Monitoring APP 46
7 Troubleshooting 47
7.1 Error Message 48
7.2 PV System for Ground Faults 49
7.2 Maintenance 50
8 Technical Parameters 51

Attention

The products, services or features purchased are subject to the commercial contracts and terms of Sunways Technologies Co., Ltd. All or part of the products, services or features described in this document may not be within purchased. Unless otherwise agreed in the contract, the Company shall not make any express or implied declaration or guarantee of the contents of this document.

Due to product version upgrades or other reasons, the contents of this document will be updated periodically. Unless otherwise agreed, this document serves only as a guide to use, and all statements, information and recommendations in this document do not constitute any express or implied guarantee.

1 Preface

※ 1.1 Overview

This manual is an integral part of Sunways STS 3-6kW series single-phase inverters (hereinafter referred to as the inverter). It mainly introduces the assembly, installation, electrical connection, debugging, maintenance and troubleshooting of the products. Before installing and using the inverter, please read this manual carefully, understand the safety information and be familiar with the functions and characteristics of the inverter.

※ 1.2 Target Groups

This manual is applicable to the electrical installers with professional qualifications and end-users. If there are any problems in the installation process, please call Sunways service telephone at +86 400-9922-958 or email Sunways at service@sunways-tech.com for consultation.

2 Safety Instructions

※ 2.1 Safety Notes

① Before installation, please read this manual carefully and follow the instructions in this manual strictly.

② Installers need to undergo professional training or obtain electrical related professional qualification certificates.

③ During the installation, do not touch any parts of the inner part of the inverter expect the terminals.

④ All electrical installations must conform to local electrical safety standards.

⑤ If the inverter needs maintenance, please contact the local designated personnel for system installation and maintenance.

⑥ To use this grid-connected inverter for power generation needs the permission of the local power supply authority.

⑦ During the operation of the inverter, the surface temperature may be higher and there is a risk of burn. Do not touch.

⑧ When installing photovoltaic panels in the daytime, the photovoltaic paanels should be covered with opaque materials to avoid the risks and danger of high voltage at the panel end in sunlight.

※ 2.2 Statement

Sunways Technologies Co.,Ltd. has the right not to undertake quality assurance in any of the following circumstances:

① Damages caused by improper transportation.

② Damages caused by incorrect storage, installation or use.

③ Damages caused by installation and use of equipment by non-professionals or untrained personnel.

④ Damages caused by failure to comply with the instructions and safety warnings in this document.

⑤ Damages of running in an environment that does not meet the requirements stated in this document.

⑥ Damages caused by operation beyond the parameters specified in applicable technical specifications.

⑦ Damages caused by unauthorized disassembly, alteration of products or modification of software codes.

⑧ Damages caused by abnormal natural environment (force majeure, such as lightning, earthquake, fire, storm, etc.).

⑨ Any damages caused by the installation or operation conditions beyond the stipulated national standard corresponding to the country where theinverter installed.

⑩ Products beyond the warranty period.

※ 2.3 Important Safety Matters

Table below shows the symbols that may appear in this document and their definition:

 Danger	Dangerous situation, if not avoided, it could result in death or serious personal injury.
 Warning	Potentially dangerous situation, if not avoided, may result in death or serious personal injury.
 Caution	Potentially dangerous situation, if not avoided, may result in moderate or minor personal injury.

 Attention	Used to transmit the safety warning information about equipment or environment, if not avoided, it may cause equipment damage, data loss, equipment performancee degradation or other unpredictable results. "Attention"does not involve personal injury.
 Note	Used to highlight important information, best practices and tips, etc. it's not warning, doesn't involve personal injury and equipment damage information.

※ 2.4 Symbols Explanation

This chapter mainly elaborates the symbols displayed on the inverter, nameplate and packing box.

▼ 2.4.1 Symbols on the Inverter

	Inverter status indicator.
	Inverter running indicator.
	Grounding symbol, the inverter casing needs to be properly grounded.

▼ 2.4.2 Symbol on the Inverter nameplate

	The inverter cannot be disposed of with household waste.
	Please read the instructions carefully before installation.
	Do not touch any internal parts of the inverter until 5 min after being disconnected from the mains and PV input.
	CE mark, the inverter complies with the requirements of the applicable CE guidelines.
	TUV certification.
	Danger. Risk of electric shock!
	The surface is hot during operation and no touch is allowed.
	Electric shock hazard, t is strictly forbidden to use the person to disassemble the inverter casing.

2.4.3 Symbol on the Packing box

	Handle with care.
	This side up.
	Keep dry.
	Stacked layers.

3 Product Description

※ 3.1 Basic Features

3.1.1 Function

The Sunways STS 3-6kW series inverter is a single-phase grid-connected PV inverter which used to efficiently convert the DC power generated by the PV string Into AC power and feed it into the grid.

3.1.2 Models

The STS 3-6kW series inverter includes 6 models which are listed below:

STS-3KTL, STS-3.6KTL, STS-4.2KTL, STS-4.6KTL, STS-5KTL, STS-6KTL

STS-3KTL-P, STS-3.6KTL-P, STS-4.2KTL-P, STS-4.6KTL-P, STS-5KTL-P, STS-6KTL-P

3.1.3 Applicable grid type

The applicable grid types for the Sunways STS 3-6kW series are TN-S, TN-C, TN-C-S and TT. When applied to the TT grid, the voltage of N to PE should be less than 30V.For more details please see Figure3-1:

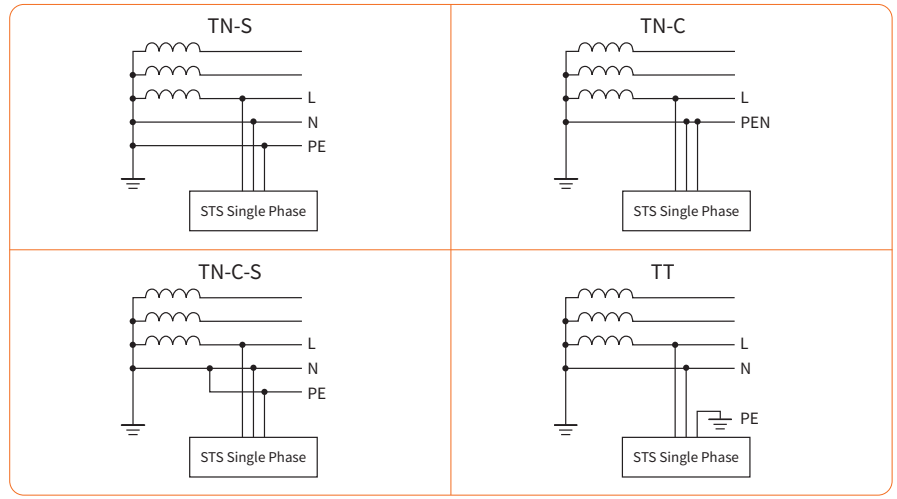

Figure 3-1 Applicable grid types

3.1.4 Storage conditions

① Inverter must be stored in its original packaging.

② The storage temperature and humidity should be in the range of -30°C and+ 60°C , and less than 90%, respectively.

③ If a batch of inverters needs to be stored, the height of each pile should be no more than 6 levels.

3.1.4 Transportation

① Choose sea, roads, air and railway in good conditions for transportation. Avoid tilt or jolt during transportation.

②When transporting the equipment using a pallet truck or forklift, ernsure that the tynes are properly positioned so that the equipment does not toppple.

③ Before moving the equipment, secure it to the pallet truck orforklift using ropes. When moving the equipment, assign dedicated personnel totake care of it.

※ 3.2 Physical Layout

3.2.1 Inverter front view

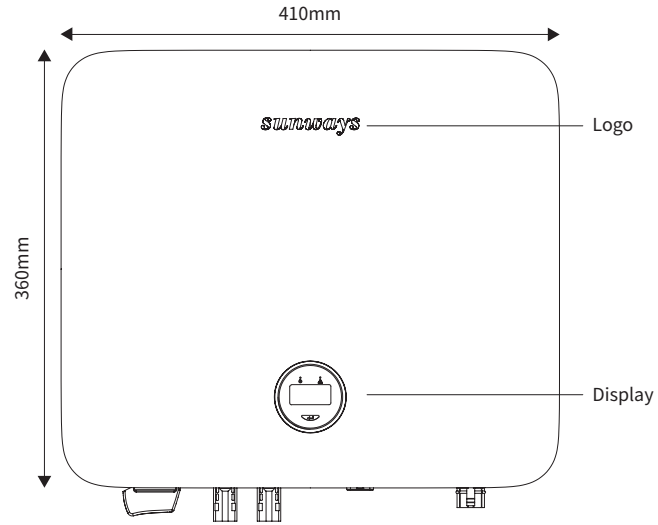

Figure 3-2 Front view

3.2.2 Inverter side view

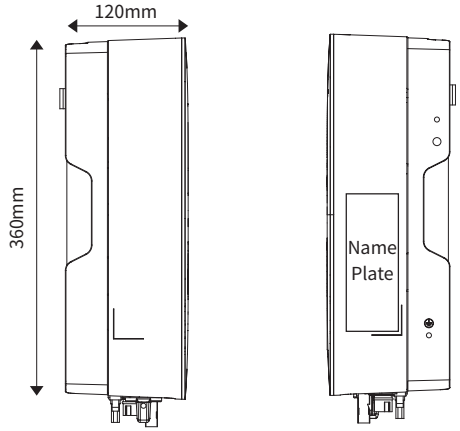

Figure 3-3 Side view

3.2.3 Inverter Bottom View

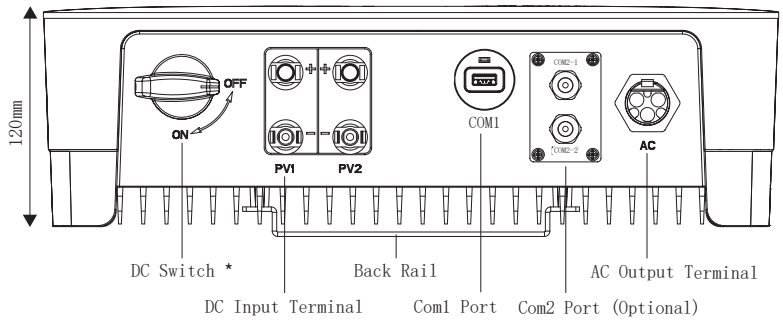

Figure 3-4 Bottom view

*: Inverter without DC switch can be selected on demand.

Wiring terminals are at the bottom of the inverter, as shown in the table below.

Item	Terminal	Note
1	DC Input terminal	PV connector
2	COM 1 Port	WiFi/LAN/GPRS/4G device connector
3	COM 2 Port	CT/RS485/DRED connector
4	AC Output Terminal	Used for AC output cable connection

3.2.4 Inverter back view

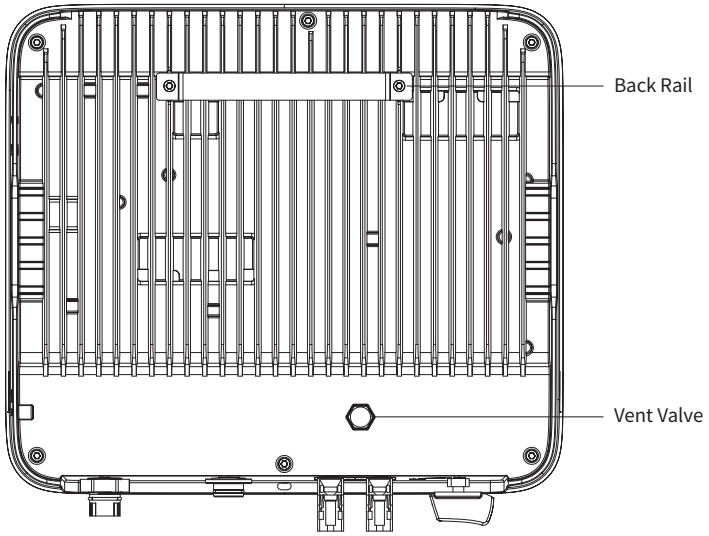

Figure 3-5 Inverter back view

※ 3.3 Display Interface



Figure 3-6 Display interface

Item	Indicator	Status	Description
1	Power Indicator	Off	No input voltage detected or input voltage is too low.
		Slow flashing	Inverter powered on, waiting for the grid connection.
		Quick flashing	Inverter detected grid power and entered self-test status.
		On	Normal, grid-connected and power generated.
2	Alarm Indicator	On	An alarm or faults detected, specific fault information can be viewed from the display.
		Off	The inverter is running normally.
		Slow flashing	The monitoring device is not connected to the router or is not connected to internet.
		Quick flashing	The monitoring device is connected to the router or connected to internet but not connected to the server.
3	OLED Display	On	Display the inverter operating information.
		Off	If the button pressed without any response, the screen is faulty or not well connected.
4	Button	Physical button	Switch OLED display information and set parameters by short press and long press.

※ 3.4 Packing List

The package of the inverter includes the following accessories. Please check whether the accessories in the packing box are complete when receiving the goods. See Figure 3-7 for the packing list.

▼ Inverter×1

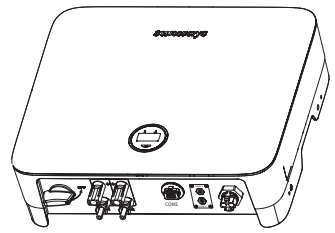

▼ Wall Bracket×1

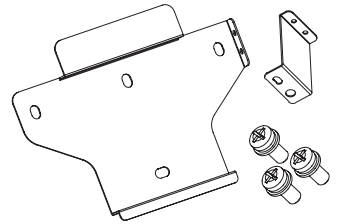

▼ Expansion Bolt×4

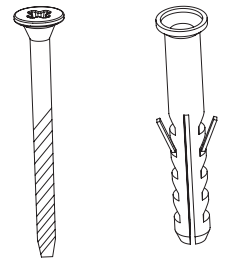

▼ 3Pin Terminal×1 ①

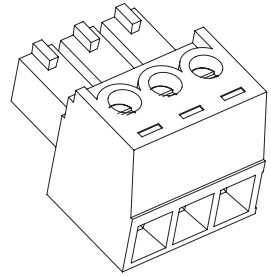

PV Terminal×2

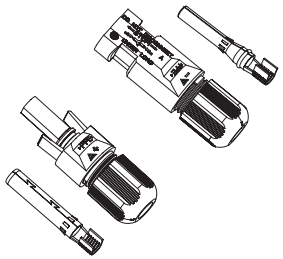

Monitoring Device×1(Optional)

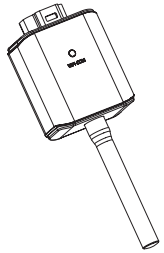

AC Terminal×1 ③

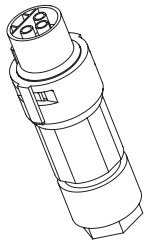

Ground Terminal×1

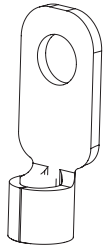

6Pin Terminal×1 ②

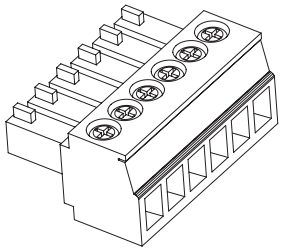

User Guide

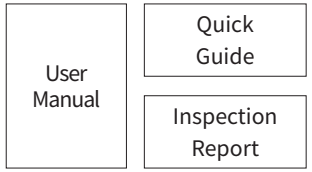

Figure 3-7 Packing list

Note	① Export limitation & control version 2pcs; RS485 and DRED version 1 pcs (This connector already re-installed inside the inverter).
	② DRED version only (This connector already pre-installed inside the inverter).
	③ The AC terminals of STS-3-6KTL and STS-7-11KTL are similar but not exactly same, do not mix them. Sunways has the right to refuse all damages caused by the mixed-use of terminals.

4 Installation

※ 4.1 Location

The Sunways STS 3-6kW series inverters designed with IP65 protection enclosure for indoor and outdoor installations. When selecting an inverter installation location, the following factors should be considered:

① The wall on which the inverters mounted must be able to withstand the weight of the inverter for a long time.

② The inverter needs to be installed in a well-ventilated environment.

③ Do not expose the inverter directly to strong sunlight to prevent the power derating due to excessive temperature. The inverter should be installed in a place with shelter to prevent direct exposure to sunlight and rain.

④ Install the inverter at eye level for easy inspection of screen data and further maintenance.

⑤ The ambient temperature of the inverter installation location should be between -30°C and 60°C .

⑥ The surface temperature of the inverter may reach up to 75°C . To avoid risk of burns, do not touch the inverter while it's operating and inverter must be installed out of reaching of children.

▼ 4.1.1 Installation location

Recommended installation location of the inverter, as shown in Figure 4-1:

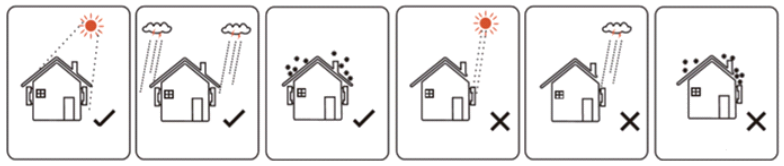

Figure 4-1 Recommended installation location

Warning	Do not put flammable and explosive articles around the inverter.

▼ 4.1.2 Installation Spacing

The requirements for inverter installation spacing are shown in Figure 4-2:

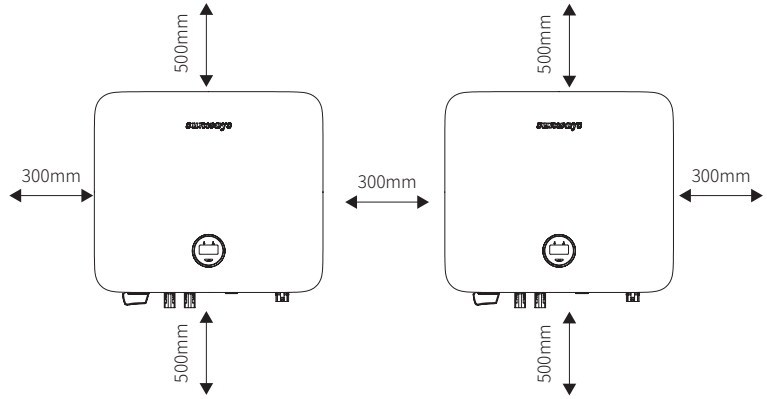

Figure 4-2 Recommended installation spacing

▼ 4.1.3 Installation Angle

The installation angle of the inverter is recommended as shown in Figure 4-3:

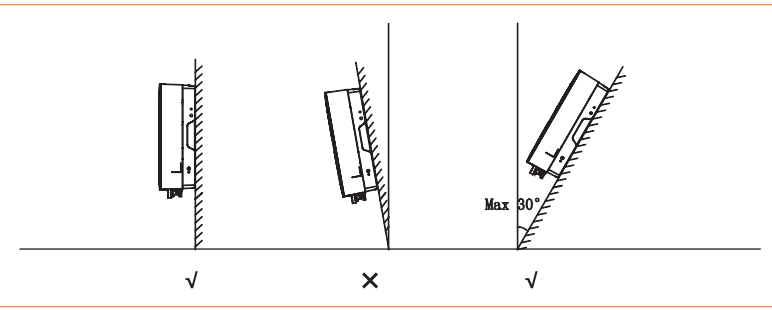

Figure 4-3 Recommended installation angle

※ 4.2 Mounting

▼ 4.2.1 Wall bracket installation

Dimensions of wall bracket, see Figure 4-4:

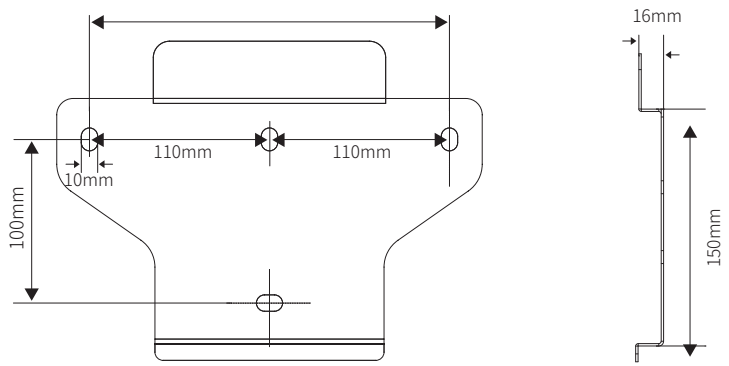

Figure 4-4 Dimensions of wall bracket

① Use the wall bracket as the template to mark the position of 4 holes on the wall. See Figure 4-5 for details:

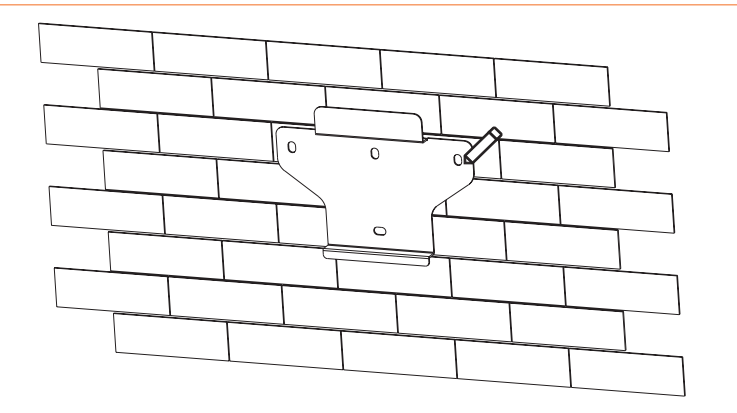

Figure 4-5 Marking hole position using installation bracket

② Bracket assembly

Prepare the two M5 screws and Z-shaped plate in the accessory bag, then fix the Z-shaped plate to the mounting bracket.

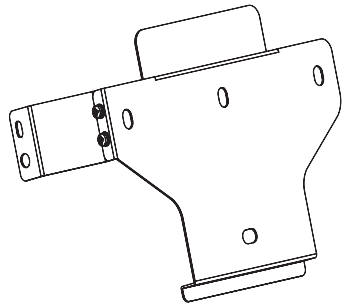

Figure 4-6 Bracket assembly

③ Use an electrical driller with 10mm diameter bit to drill 4 holes in the wall with 80mm depth.

Warning	Before drilling, make sure to avoid any buried water tube and electric wires in the wall.

④ Insert the expansion tubes into the holes and tighten them, then fix the bracket onto the wall with expansion screws by using a cross screwdriver, as shown in Figure 4-7:

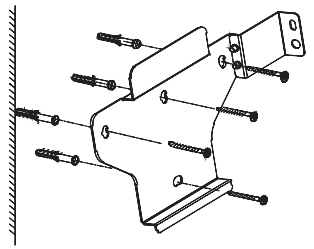

Figure 4-7 Fixing the wall bracket

▼ 4.2.2 Mounting the inverter

Lift the inverter, hang the back rail on the fixed wall bracket carefully. Screws the inverter to the Z-shaped plate (The lock is purchased separately). See Figure 4-8 for details:

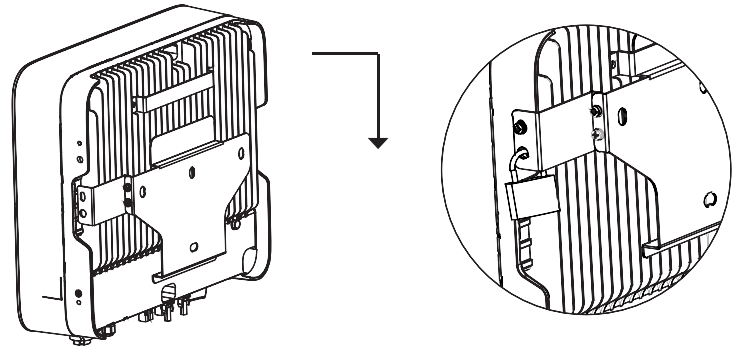

Figure 4-8 Mounting the inverter

※ 4.3 External ground connection

Connect the inverter and ground bar through PE wire to achieve the purpose of grounding protection. Please always remember wiring the PE wire before wiring other wires.

Danger	Do not connect the N-wire as a protective ground wire to the inverter casing. Otherwise, it may cause electric shock.
Attention	Good grounding is good for resisting surge voltage shock and improving EMI performance. Inverters must be well-grounded. For a system with only one inverter, the PE cable needs to be grounded. For a multi-inverter system, all inverters PE wires need to be connected to the same grounding copper bar to ensure equipotential bonding.

Ground terminal connection steps:

① The external grounding terminal is located in the lower right side of the inverter.

② Fix the grounding terminal to the PE wire with a proper tool and lock the grounding terminal to the grounding hole in the lower right side of the inverter, as shown in Figure 4-9.

③ The cross-sectional area of the external grounding cable is 4mm^2.

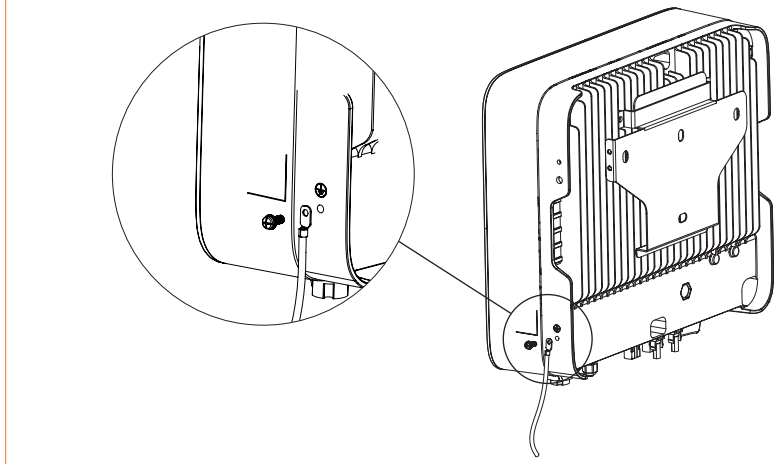

Figure 4-9 Grounding terminal connection

※ 4.4 Electrical Connection

Danger	A high voltage in the conductive part of the inverter may cause an electric shock. When installing the inverter, make sure that the AC and DC sides of the inverter are completely de-energized.
Warning	Do not ground the positive or negative pole of the PV string, otherwise it will cause serious damage to the inverter.
Warning	Static may cause damage to the electronic components of the inverter. Anti- static measures should be taken during installation and maintenance.
Attention	Do not use other brands or other types of terminals other than the terminals in the accessory package. Sunways has the right to refuse all damages caused by the mixed-use of terminals.
Attention	Moisture and dust can damage the inverter, ensure the cable gland is securely tightened during installation. The warranty claim will be invalidated if the inverter is damaged as a result of a poorly connected cable connector.
Attention	For AU market, Inverters should not be installed in multiple phase configurations.

▼ 4.4.1 Inverter PV string connection

1. The following must be considered when making electrical connections to the inverter:

① Disconnect the AC breaker switch on the grid side.

② The DC switch of the inverter must be turned to the "OFF" position.

③ For best practice, ensure PV modules of the same model and specifications are connected in each string.

④ Make sure the maximum output voltage of each PV string does not exceed 600V.

2. DC connector assembly procedure

① Select the appropriate photovoltaic cable:

Cable type	Traverse area (mm²)	
General photovoltaic cable	Range (mm²)	Recommended value (mm²)
	2.5-4.0	4.0

② Peel off the DC cable insulation sleeve for 7 mm, as shown in Figure 4-10:

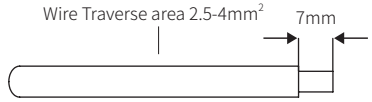

Figure 4-10

③ Disassemble the connector in the accessory bag, as shown in Figure 4-11:

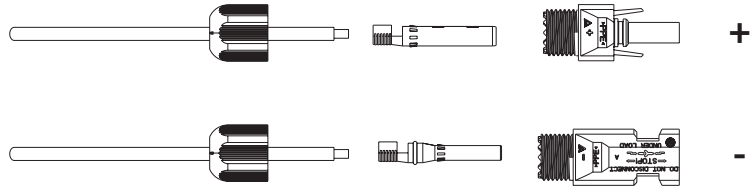

Figure 4-11

④ Insert the DC cable through the DC connector nut into the metal terminal and press the terminal with a professional crimping plier (pull back the cable with some power to check if the terminal is well connected to the cable), as shown in Figure 4-12:

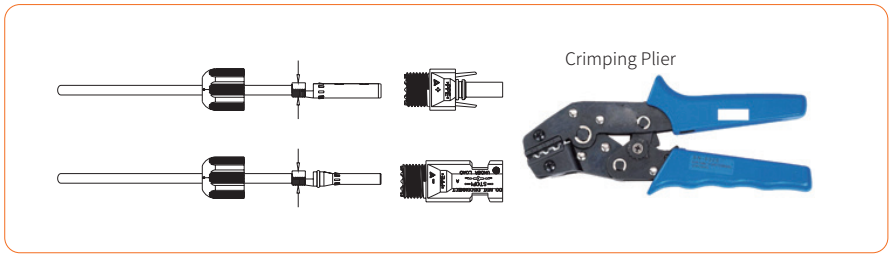

Figure 4-12

⑤ Insert the positive and negative cables into the corresponding positive and negative connectors, pull back the DC cable to ensure that the terminal is tightly attached in the connector.

⑥ Use an open-end wrench to screw the nut to the end to ensure that the terminal is well sealed, as shown in Figure 4-13:

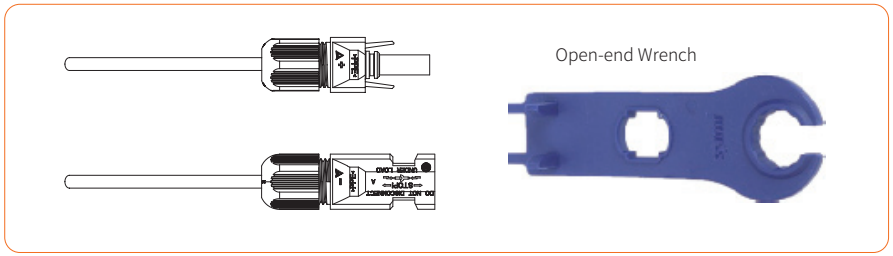

Figure 4-13

Warning	① Before assembling the DC connector, make sure that the cable polarity is correct.
	② Use a multimeter to measure the voltage of the DC input string, verify the polarity of the DC input cable, and ensure that each string voltage is within 600V.

3. Insert the positive and negative connectors into the inverter DC input terminals respectively, and a "click" sound represents the assembly in place, as shown in Figure 4-14:

4. Seal the unused PV terminals with the terminal caps.

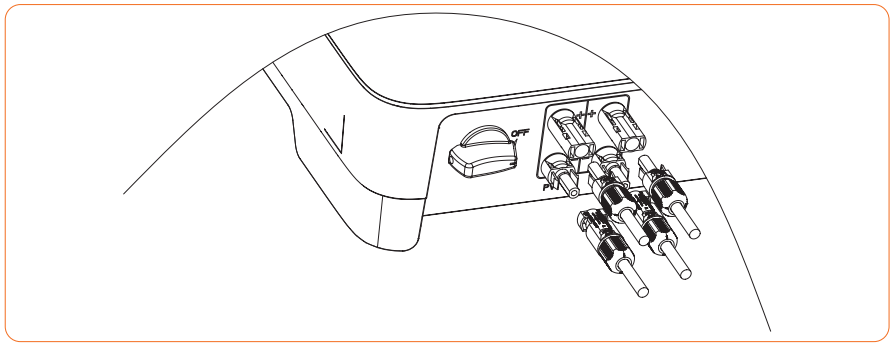

Figure 4-14

5. System Layout of Units without Integrated DC Switch

① The DC switch of Sunways inverter is optional. Local standards or codes may require that PV systems are fitted with an external DC switch on the DC side. The DC switch must be able to safely disconnect the open-circuit voltage of the PV array plus a safety reserve of 20%. Install a DC switch to each PV string to isolate the DC side of the inverter.

② The DC switch has to be certified by AS 60947.3:2018 and AS/NZS IEC 60947.1:2020. The Max.current of the DC switch matched by STS-3-6KTL inverter is no less than 30A and for STS-3-6KTL-P inverter is no less than 40A. We recommend the following electrical connection,as shown in Figure 4-15:

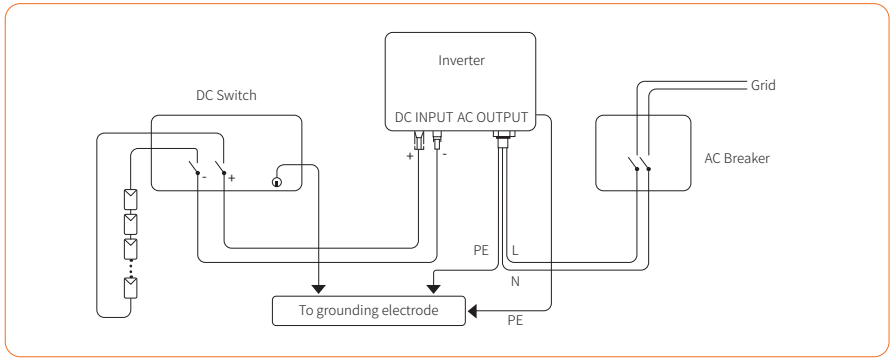

Figure 4-15

4.4.2 Connection of AC output

The following principles must be considered when making AC outpuit connection:

① An independent AC breaker is required in on-grid output side, and any loads cannot be connected with inverter directly.

② Before making the connection of AC cable, please confirm all DC & AC power source are disconnected from the inverter.

③ The Sunways STS-3K~6KTL(-P) series single-phase inverter applies to the single-phase power grid with a voltage of 230V and a frequency of 50/60Hz.

④ All Sunways inverters incorporate internal RCD (Residual Current Device) to protect against possible electrocution in case of a malfunction of the PV array, cables or inverter (DC). The RCD in the Sunways inverter can detect leakage on the DCside. An external RCD is required in some countries. The installer must check which type of RCD is required by the specific local electric codes. Installation of an RCD must alvways be conducted in accordance with local codes and standards. Sunways recommends the use of a type-A RCD, with a tripping current of 300mA or higher.

1. AC connector connection steps

The recommended AC cable and AC breaker for Sunways STS3-6kw single-phase inverter are as shown in following table:

Model	STS-3KTL (-P)	STS-3.6KTL (-P)	STS-4.2KTL (-P)	STS-4.6KTL (-P)	STS-5KTL (-P)	STS-6KTL (-P)
Cable	4mm²	4 mm²	4 mm²	4 mm²	6 mm²	6 mm²
Breaker	20A	25A	32A	32A	40A	40A

① Take the AC connector out of the accessory bag and disassemble it, as shown in Figure 4-16:

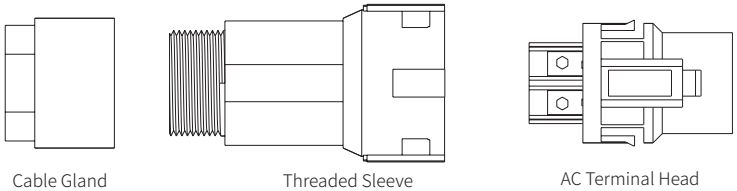

Figure 4-16

② According to the table above, select an appropriate cable, peel the insulation sleeve of AC cable off for 50mm, and peel off the end of L /PE / N wires for 8mm, as shown in Figure 4-17:

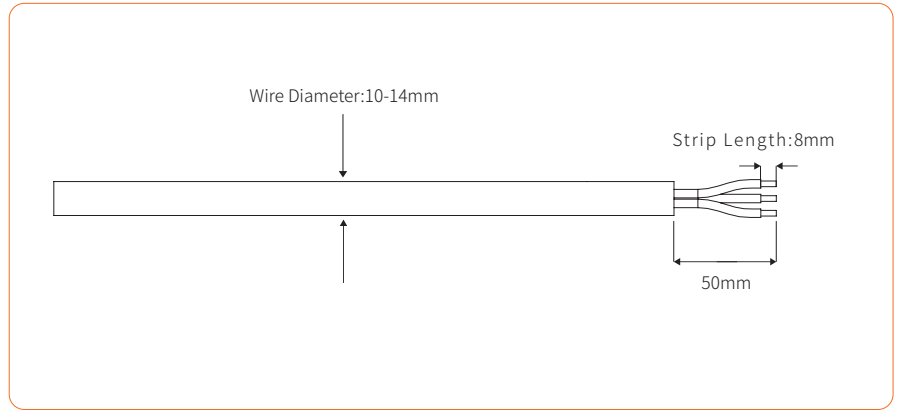

Figure 4-17

③ Insert the stripped end of each three wire into the appropriate hole of the terminal head (yellow green wire to PE port, red or brown wire to L port, and blue or black wire to the N port). Please try to pull out the cable to make sure it is well connected. As shown in Figure 4-18:

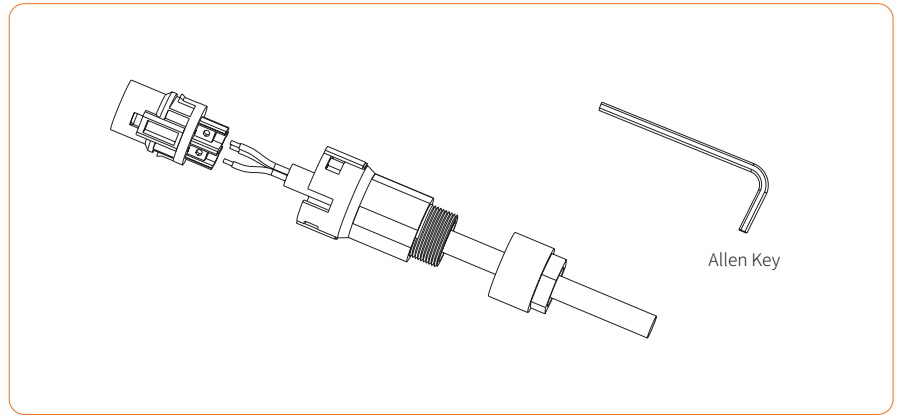

Figure 4-18

④ According to the arrow direction push the threaded sleeve to make it connected with the AC terminal head and then rotate the cable gland clockwise to lock it, as shown in figure 4-19:

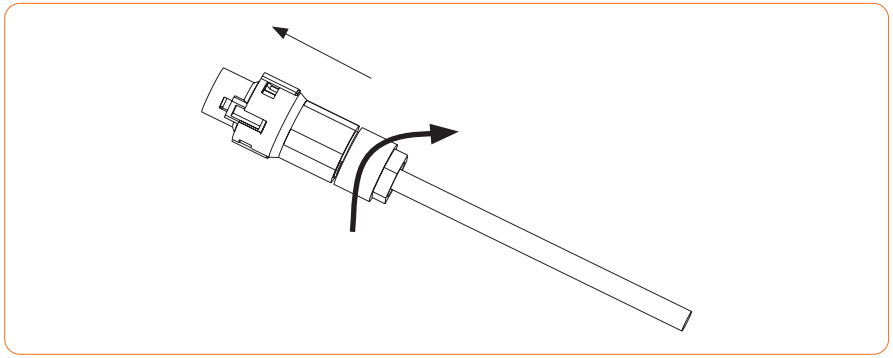

Figure 4-19

2. Connect the AC connector to the inverter AC terminal, and the slight click shows that the connection is in the place. As shown in figure 4-20:

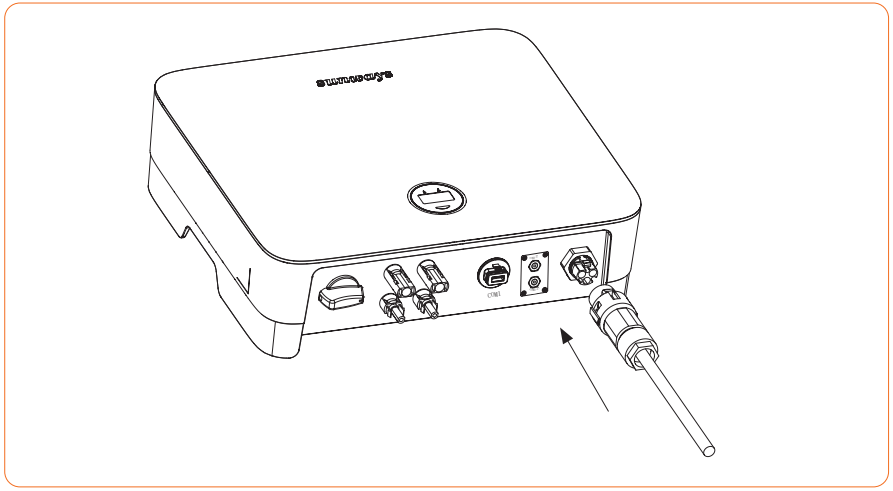

Figure 4-20 Connect the AC connector

※ 4.5 Monitoring Device Installation

Sunways STS 3-6kW series single phase inverter supports WIFI, GPRS, LAN, 4G and RS485 communication.

Plug the WIFI, LAN, 4G or GPRS module into the COM1 port in the bottom of inverter (as shown in Figure 4-21). A slight "click" sound during the installation represents that the assembly is in place.

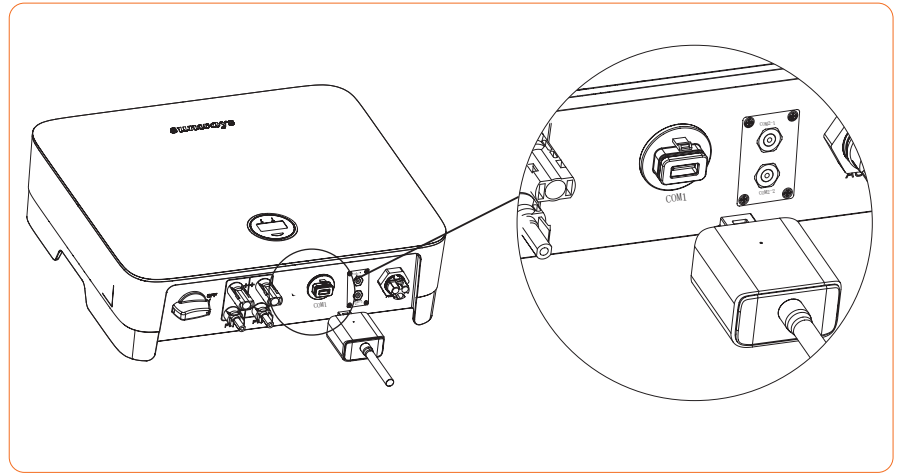

Figure 4-21 Monitoring device installation

Note	1. The 4G and GPRS version module does not need to be configured. 2. The WiFi version module needs to be configured to the router for the first installation. If the router name or password are changed, the WiFi dongle will need to be reconfigured. For details, please refer to the [QUICK INSTALLATION GUIDE] which is attached to the accessory bag. 3. If DHCP is enabled on the router, the LAN version module does not need to be configured. Otherwise, please refer to the [QUICK INSTALLATION GUIDE] which is attached to the accessory bag.
Attention	Do not touch the waterproof plug in the card slot except for replacing the SIM card. In that case, please make sure the card slot is completely sealed by the weatherproof plug after replacing the SIM card. Any damages caused by improper waterproof plug placement, will void warranty.

※ 4.6 CT/RS485/DRED Connection

▼ 4.6.1 Terminals definition

Inverter communication ports are located at the behind of the COM2 plate at the bottom and include CT port, RS485 port (used for Datalogger connection), and DRED port, as shown in Figure 4-22:

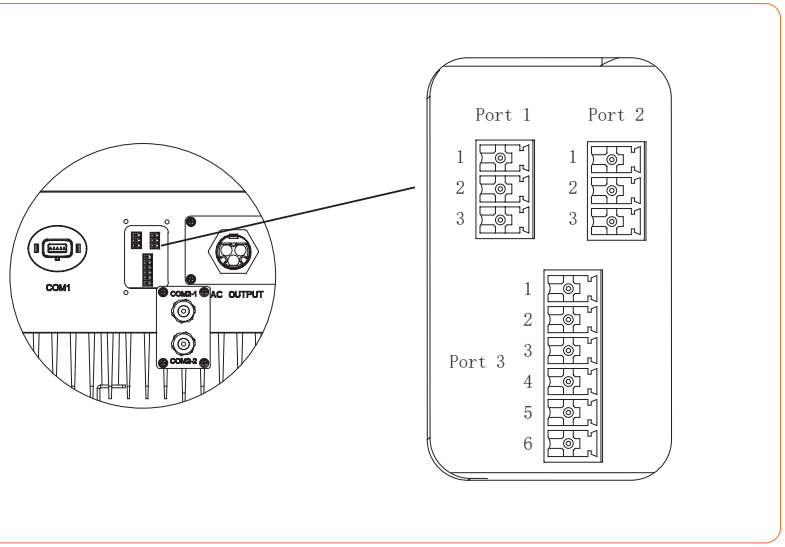

Figure 4-22

	Port 1	Port 2	Port3
Note	CT Port	RS485 Port	DRED Port
	① This port is available on export limitation & control, RS485 and DRED versions of the inverter only. ② The Pin connector in inverter Port1 and Port2 may vary from 2Pin to 3pin according to the shipment version.		

Different versions of the inverter have different terminals, which are defined as follows:

Port	Function	NO.	Definition
Port1	① Only Export limitation & control version with this port. ② Connect external CT to activate the Export Limitation & control function of Sunways STS series inverter. ③ The color of CT is only identified by Sunways.	1	Connect S1 cable (Black CT) or white black cable (Blue CT)
		2	Connect S2 cable (Black CT) or black cable (Blue CT)
		3	NULL
Port 2	① Export limitation & control/RS485/ DRED version with this port. ② In case of multiple inverters, all the inverters can be daisy-chained via RS485 cables.	1	RS485 A
		2	RS485 B
		3	PE/NULL
Port 3	① Only DRED version with this port. ② DRED means demand response enable device. The AS/NZS 4777.2:2020 requires inverters to support demand response mode (DRM). This function is for inverters that comply with AS/ NZS4777.2:2020 standard. ③ Sunways inverter is fully compliant with all DRM. The 6 pin connector is used for DRM connection. ④ Support DRM command: DRM0, DRM5, DRM6, DRM7, DRM8.	1	COM/DRM0
		2	REFGEN
		3	DRM4/8
		4	DRM3/7
		5	DRM2/6
		6	DRM1/5

▼ 4.6.2 RS485 Communication

STS series single-phase inverter supports multiple inverters daisy-chain connection to a data logger via RS485 communication.

Multiple inverters connection diagram as shown in Figure 4-23:

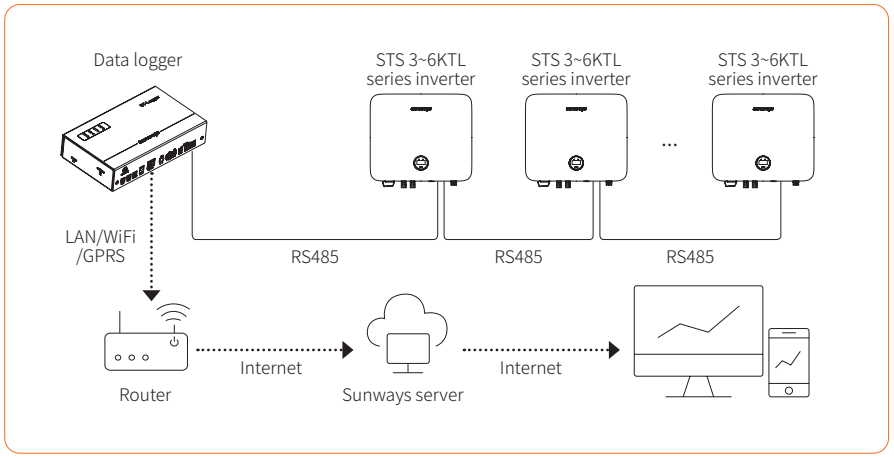

Figure 4-23

The maximum distance between the inverter at the end of the daisy chain and the Data logger should be within 1000m.

Attention	It is recommended to use the RS485 communication cable with a cross sectional area of 0.75-1.5mm² and an outer diameter of 5mm-10mm. RS485 cable requirements: Shielded twisted-pair cable or shielded twisted Ethernet cable.

▼ 4.6.3 Wiring Steps:

① Remove the COM2 plate in the bottom of the inverter with a cross screwdriver.

② Put the cable through the connector and connect to the terminal in the following order: screw cap, sealing ring, insulator, metal plate, nut and 3/6pin connector, as shown in Figure 4-24:

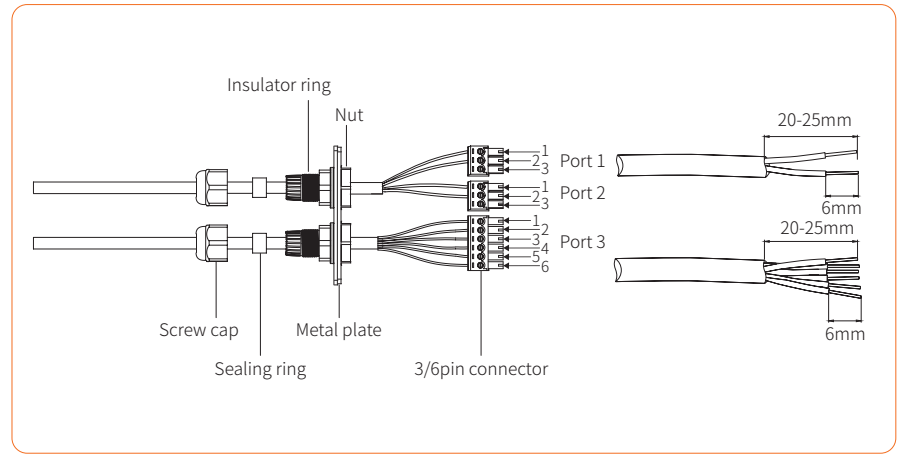

Figure 4-24

③ Insert the cable to the port in the 3/6pin connector and fasten with a screwdriver.

④ Insert the 3/6pin connector into the 3/6pin connecter inside the inverter, and screw the COM2 plate back with a cross screwdriver, as shown in Figure 4-25:

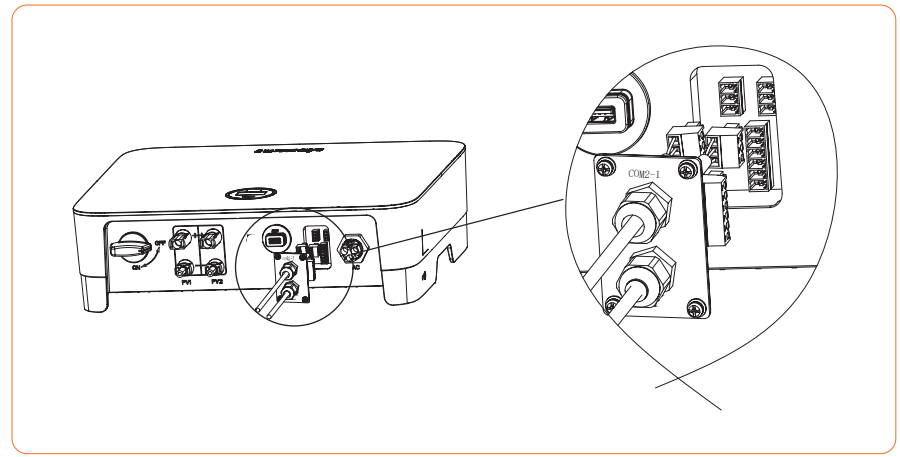

Figure 4-25

5 Equipment Commission and Stop

※ 5.1 Equipment commission

5.1.1 Verification before power on

No	Terminal	Note
1	Inverter	The product is installed correctly and securely.
2	Installation	The product is firmly installed at a clean place that is well-ventilateed and easy to operate.
3	Grounding	The PE cable is connected correctly, securely, and reliably.
4	Switch	The DC switch and all the switches connecting to the inverters are OFF.
5	Cable connection	The PE, DC input, AC output, and communication cables are connected correctly and securely.
6	Cable ties	Cable ties are intact, routed properly and evenly.
7	Unused terminal and port	Unused cable holes are fitted using the waterproof nuts. The electrical conduit holes are sealed.
8	Grid requiremnts	The voltage and frequency at the connection point meet the inveerter grid connection requirements.

5.1.2 Start Inverter

When starting the inverter, follow these steps:

1) Turn on the AC breaker first (close the AC circuit breaker).

2) Turn the DC switch in the inverter bottom to the "ON" positicon.

3) The inverter will start to check the DC and AC input parameters and self-check, and if everything is normal, the inverter will start to work according to the vwork mode which you set on the App. The inverter display and indicators will show relative parameters and status. Please refer to LED indicators in part 3.3.

5.1.3 System Commission

For instruction on how to select/active country grid code, protection settings, power quality response mode and region settings as per to AS/NZS 4777.2:2020, please refer to 6.2 Country code (safety code setting), 6.3 Grid protection settings, 6.4 Power quality response modes, 6.5 Fixed power factor setting, 6.6 Power rate limit setting. 6.7 Export limit and generation limit.

※ 5.2 Stop Inverter

When turning off the inverter, please follow the steps below:

1) Shut off the inverter through the APP or the button on the display first.

2) Disconnect the breakers on the grid and load side.

3) Turn off the battery switch, and disconnect the DC breaker on the baattery side (if any).

4) Wait 30 seconds and then turn the inverter DC switch to the "OFF" position. At this time, there is remaining power in the inverter capacitor. Wait for 5 minutes until the inverter is completely de-energized before operating.

※ 5.3 Removing of Inverter

When remove and dispose the inverter, please make sure that thne inverter is powered off. Wear proper PPE before any operations. Please follow bellow steps:

1) Disconnect all the cables, including DC cables, AC cables, conmmunication cables, the communication module, and PE cables.

2) Remove the inverter from the mounting plate.

3) Remove the mounting plate.

4) Store the inverter properly. If the inverter needs to be used later,ensure that the storage conditions meet the requirements.

6 General Operation

※ 6.1 Display Operation

When the inverter is turned on, the following interfaces will be displayed on the OLED display, and the OLED display allows the user to check various operation information and to modify the settings of the inverter. Please refer to the following display operation flow for details:

6.1.1 Main Window and General Setting

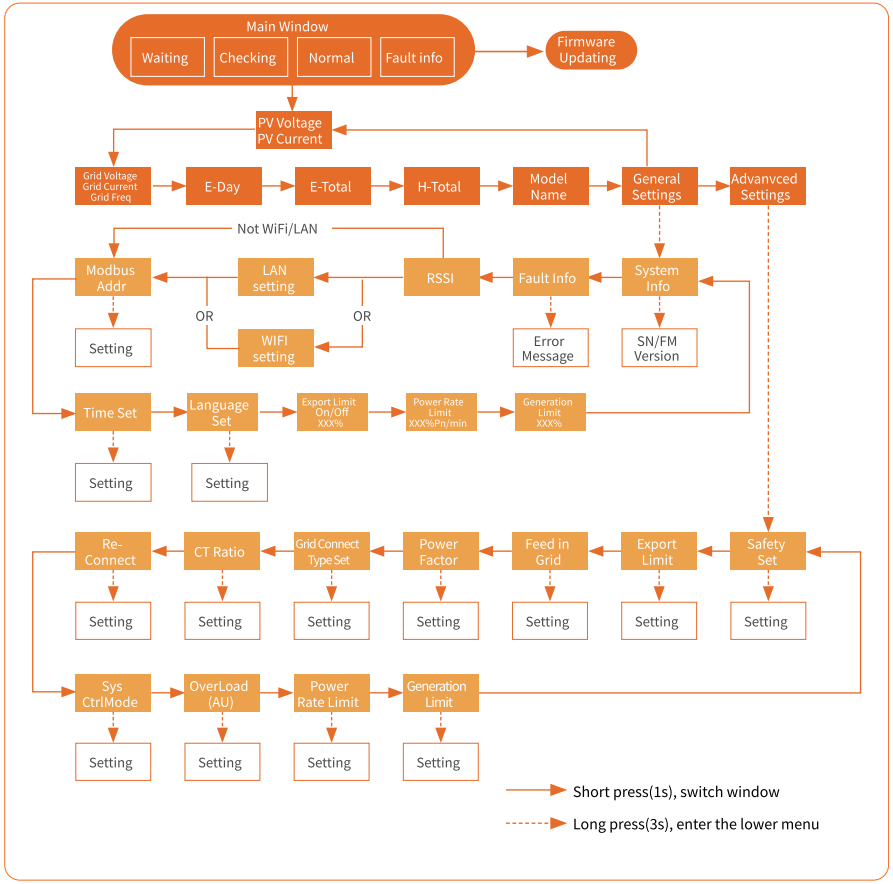

6.1.2 LAN/WIFI Setting

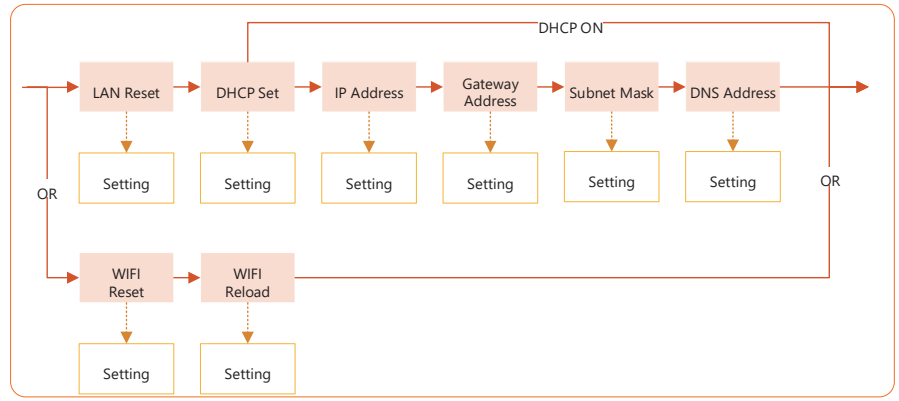

Note

Please wait for 10 seconds and the inverter will automatically save your settings or modifications.

6.1.3 AC Output Boost for STS-5KTL(-P) Inverter

The maximun output power of the residencial single-phase solar system is 5kVA in most of them states in Australia. Check the local DNSPs or authorities if they allow AC output more than 5kVA.

Note

① Advanced settings can only be changed by qualified professionals withrelevant certifications.
② Check requirements with local NSP before activating 10% AC output boost.
③ Only STS-5KTL(-P) has the option to enable/disable the 10% AC output boost
④ The default password to access the advanced settings is 1111, appliccable to all on-grid inverters.

Please follow this flow chart to enable 10% AC output boost:

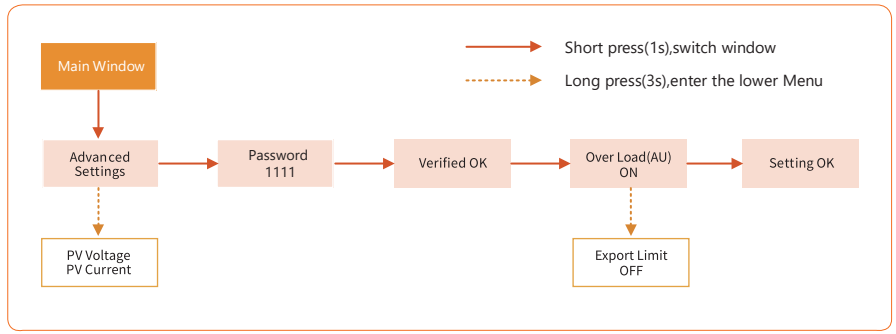

※ 6.2 Firmware Version View

Inverter's firmware version can be read under menu "System Info" in "General Setting".

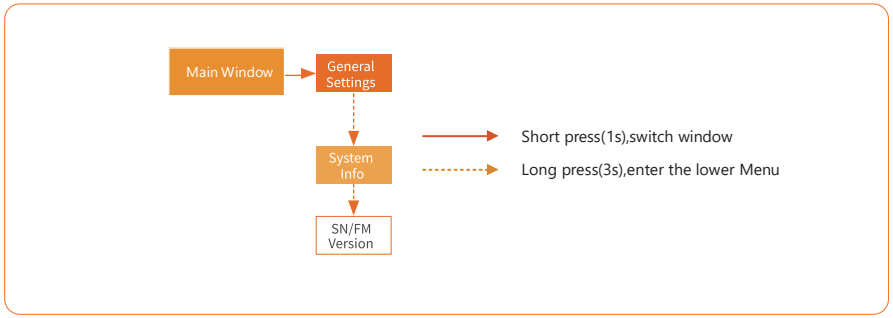

※ 6.3 Country Code (Safety Code) Setting

Please set "Country code (Safety code)" under the menu "Safety Set" in "Advanced Settings".

Please follow this flow chart to set "Country code (Safety code)":

The country grid code and region settings are password protected. User should be able to view but not edit the country codes. If you are installer, please contact importer for password. You can also call Sunways service telephone at +86 400-9922-958 or email Sunways at service@sunways-tech.com for password.

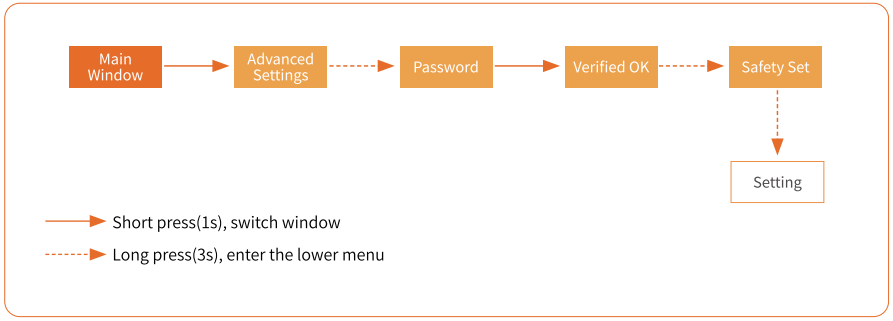

Note	For compliance with AS/NZS 4777.2:2020, please select from Region A/B/C New Zealand. Please contact your local grid operator for which region to select.

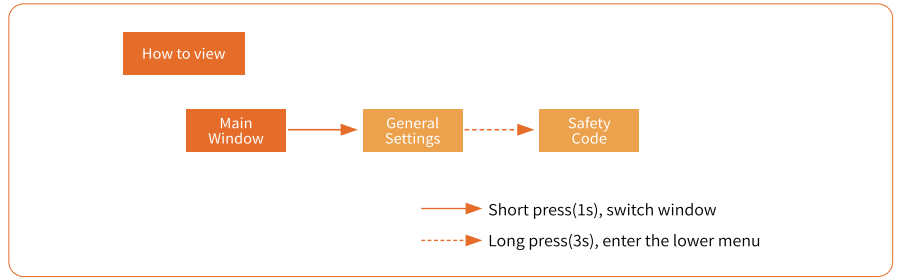

※ 6.4 Grid Protection Settings

This mode can be enabled via the configuration software. It is enabled by default in some regions, such as AU market. For information on how to change default setpoints, please contact Sunways Technical Support at service@sunways-tech.com. User have access to view the grid protection status in Sunways Portal APP. Please refer to bellow steps.

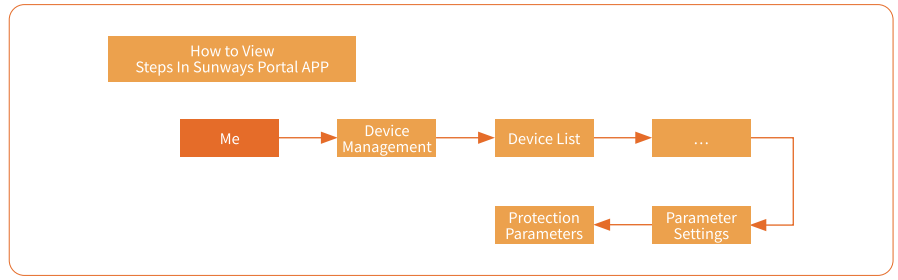

※ 6.5 Power Quality Response Codes

Through the host computer software, set the ON/OFF state of the power quality response mode to enable/disable this function. The default for this function in Australia is the ON state. User have access to view the power quality response mode status in Sunways Portal APP. Please refer to bellow steps.

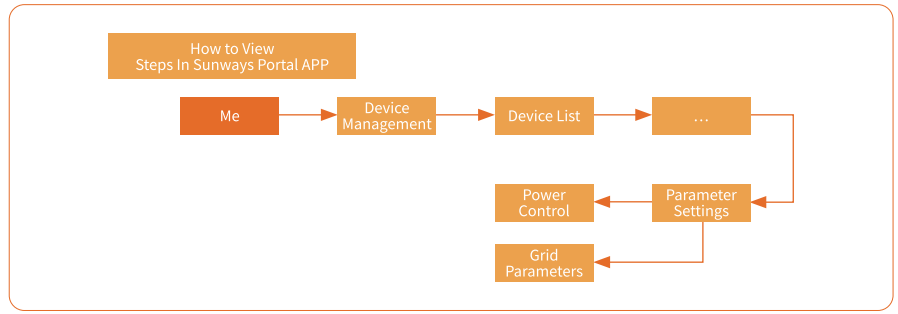

6.5.1 Power derating for voltage variation (Volt-Watt mode)

This mode can be enabled via the configuration software. It is enabled by default in some regions, such as AU market. For information on how to change default setpoints please contact Sunways Technical Support at service@sunways-tech.ccom.

6.5.2 Reactive power regulation for voltage variation (Volt-VAr mode)

This mode can be enabled via the configuration software. It is enabled by default in some regions, such as AU market. For information on how to change default setpoints please contact Sunways Technical Support at service@sunways-tech.ccom.

6.5.3 Reactive power mode

This mode can be enabled via the configuration software. It is enabled by default in some regions, such as AU market. For information on how to change default setpoints please contact Sunways Technical Support at service@sunways-tech.ccom.

※ 6.6 Fixed power factor setting

Please set "Power Factor" under the menu "Power Factor" in "Advanced Settings".
Please follow this flow chart to set "Power Factor":
The "Power Factor" settings are password protected. User should be able to view but not edit. If you are installer, please contact importer for password. If there are any problems in the installation process, please call Sunways service telephorne at +86400-9922-958 or email Sunways at service@sunways-tech.com for consultation.

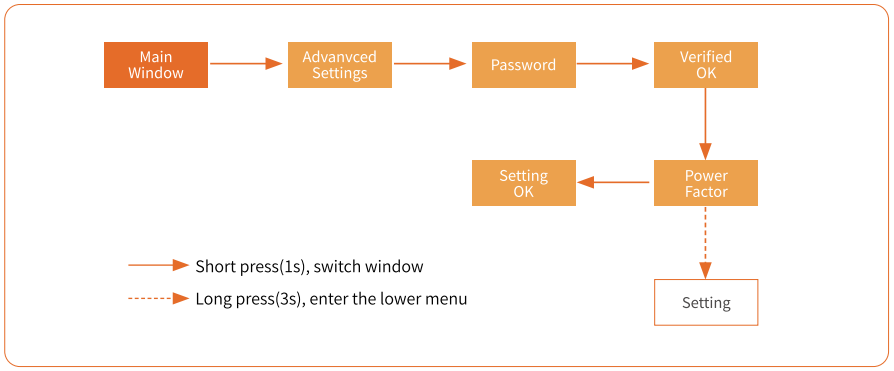

※ 6.7 Power rate limit setting

Please set "Power rate limit " under the menu "Power rate limit" in "Advanced Settings".
Please follow this flow chart to set "Power rate limit":
The "Power rate limit " settings are password protected. User should be able to view but not edit. If you are installer, please contact importer for password. If there are any problems in the installation process, please call Sunways service telephoone at +86400-9922-958 or email Sunways at service@sunways-tech.com for consultation.
Enable the Power rate limit function by short pressing or long pressing the button on the inverter screen.
Set the percentage of the power that allowed to ramp up, when set to XXX%Pn/min, it means that the maximum power allowed to ramp up is XXX%Pn/min of the inverter's rated output power.

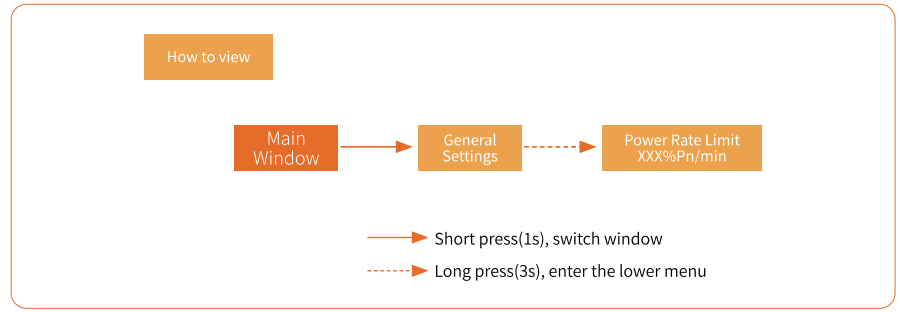

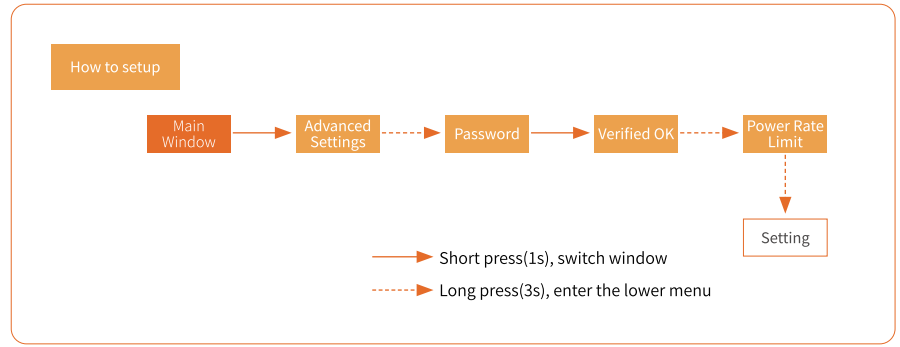

※ 6.8 Export Limit and Generation Limit

▼ 6.8.1 Export limit function setting

When the inverter is not equipped with "Export limit control" accessories, "Export Limit" function can be enabled.

Please set "Export Limit" under the menu "Export Limit" in "Advanced Settings".

Please follow this flow chart to set "Export Limit":

The "Export Limit" settings are password protected. User should be able to view but not edit the Export Limit. If you are installer, please contact importer for password. If there are any problems in the installation process, please call Sunways service telephone at +86400-9922-958 or email Sunways at service@sunways-tech.com for consultation.

Enable the Export Limit function by short pressing or long presssing the button on the inverter screen.

Set the percentage of the power that allowed to feed into grid, wthen set to XXX%, it means that the maximum power allowed to feed into grid is XXX% of the inverter's rated output power. If you need Zero Export, set the percentage to 0%.

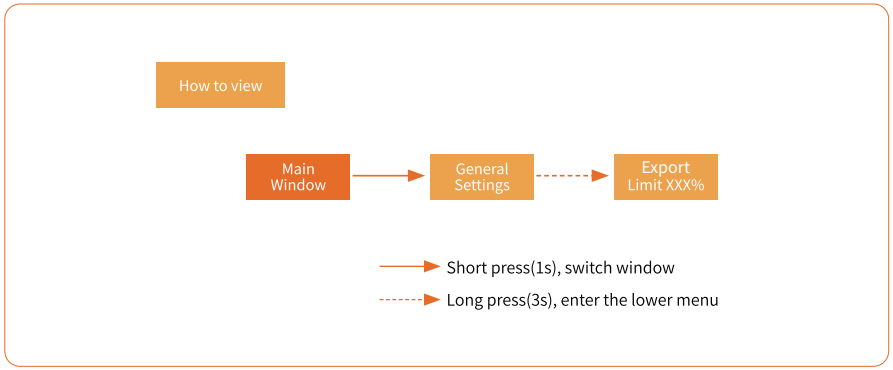

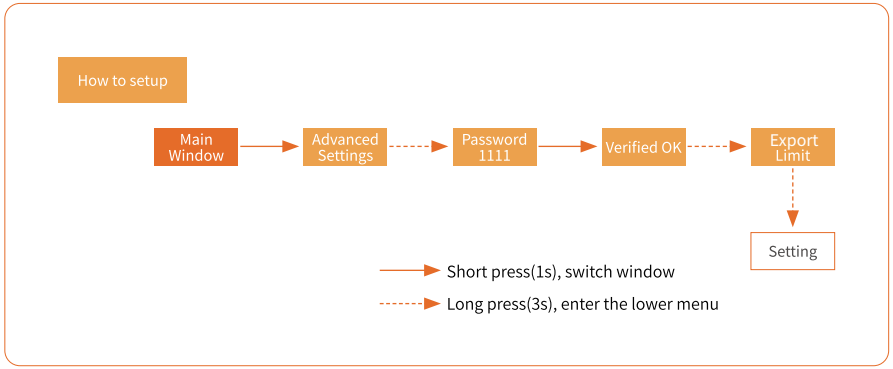

▼ 6.8.2 Generation limit setting

When the inverter is not equipped with "Generation limit control" accessories, "Generation Limit" function can be enabled.

Please set "Generation Limit" under the menu "Generation Limit" in "Advanced Settings.

Please follow this flow chart to set "Generation Limit":

The "Generation Limit" settings are password protected. User should be able to view but not edit the Generation Limit. If you are installer, please contact importer for password. If there are any problems in the installation process, please call Sunways service telephone at +86400-9922-958 or email Sunways at service@sunways-tech.com for consultation.

Enable the Generation Limit function by short pressing or long presssing the button on the inverter screen.

Set the percentage of the power that allowed to output, when set to XXX%, it means that the maximum AC output power of inverter is XXX% of the inverter's rated output power. If you need Zero output, set the percentage to 0%.

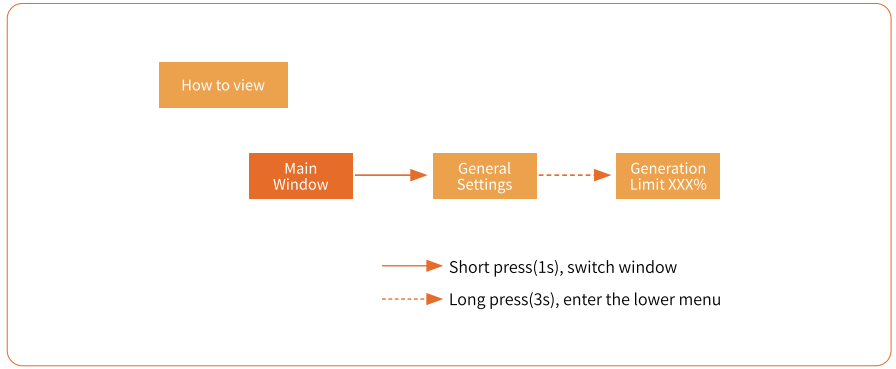

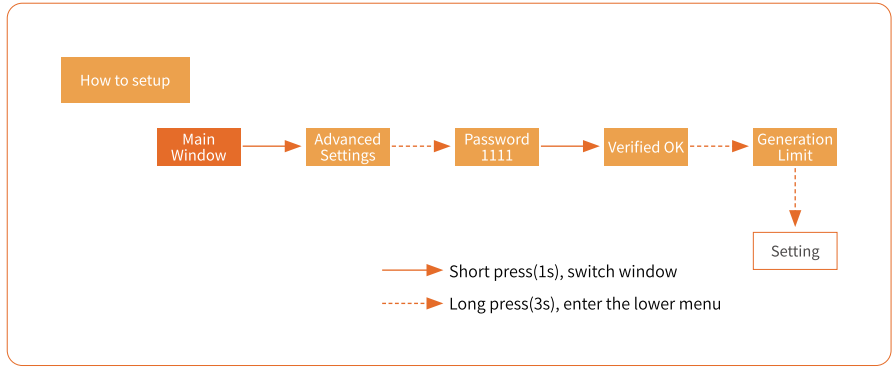

6.8.3 Soft export and hard export switch

During "Export Limit" setting and "Generation Limit" setting, the"Soft Export" mode and "Hard Export" mode can be switched in "Sys CtrlMode".

Please follow this flow chart to switch the "Soft Export" mode and"Hard Export"mode.

This settings are password protected. User should be able to view but not edit. If you are installer, please contact importer for password. If there are any pproblems in the installation process, please call Sunways service telephone at +86400-9922-9558 or email Sunways at service@sunways-tech.com for password.

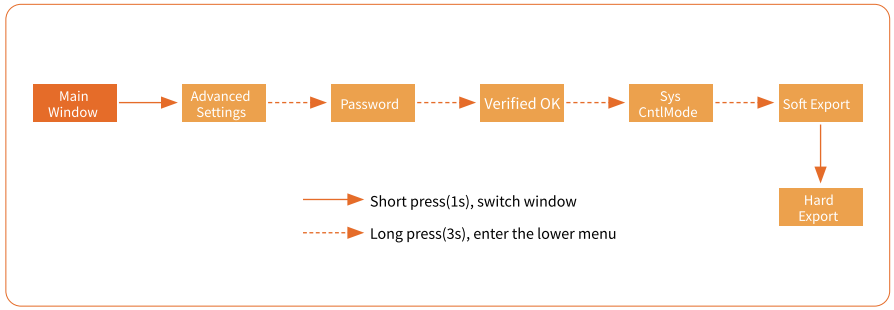

6.8.4 Export Limit Elements

In Australia, CT & Meters listed bellow are required for compliance with AS4777.2 standard. Please activate Sunways STS 3-6kW series inverter export limit function with any CT & Meters mentioned bellow:

Meter	CT
STK-16D90-x, (x=1,2,3)	C-16D90-45
STK-24D90-x, (x=1,2,3)	C-24D90-45
STK-16D120-x, (x=1,2,3)	C-16D120-45
STK-24D120-x, (x=1,2,3)	C-24D120-45
STK-35D300-x, (x=1,2,3)	C-35D300-45
STK-50D300-x, (x=1,2,3)	C-50D300-45

※ 6.7 Online Monitoring APP

Sunways inverter provides a monitoring port that can collect and transmit data from the inverter to Sunways monitoring platform via an external monitoring device. Please refer to the product nameplate on side of enclosure to get the monitoring application. If download issues exist , contact your dealer or Sunways technical support.

7 Troubleshooting

※ 7.1 Error Message

Sunways STS 3-6kW series single phase inverter is designed in accordance with grid operation standards, and conform to the requirements of safety and EMC. The inverter had passed a series of rigorous tests to ensure it runs sustainably and reliably before shipment.

When a fault occurs, the corresponding error message will be shown on the OLED display, and in this case, the inverter might stop feeding into grid. The fault messages and their corresponding troubleshooting methods are listed below:

Error Message	Description	Troubleshooting
No Display	No Display	① Check whether cables are all firmly connected and DC switch is on. ② Check whether the input voltage meets the working voltage.
Mains Lost	Grid power outage, AC switch or circuit is disconnected.	① Check whether the mains supply is lost. ② Check whether the AC breaker and terminals are well connected.
Grid Voltage Fault	Grid overvoltage or undervoltage, the grid voltage is higher or lower than the set protection value.	① Check whether the safety regulation setting is correct. ② Check the voltage of the grid. If the grid voltage exceeds the allowed range of inverter protection parameters, please contact the local grid company to resolve. ③ Check whether the impendence of the AC cable is too high. Replace with a thicker AC cable if that is the case.
Grid Frequency Fault	Grid over frequency or underfrequency, the grid frequency is higher or lower than the set protection value.	① Check whether the safety regulation settings are correct. ② Check the frequency of the grid. If the grid frequency exceeds the allowed range of inverter protection parameters, please contact the local grid company to resolve.

Error Message	Description	Troubleshooting
ISO Over Limitation	Low system insulation resistance, which is generally caused by poor insulation to ground of the module/cable or by rainy and damp environment.	① Check whether the PV panels, cables, and connectors are broken or water leaked. ② Check whether there is a reliable inverter grounding line.
GFCI Fault	Excessive leakage current.	① The ground current is too high. ② Check whether the PV cable has a short circuit to ground.
PV Over Voltage	PV over voltage is too high.	① Input voltage is too high. ② Reduce the number of PV panels to make sure the open-circuit voltage of each string is lower than the inverter max allowed input voltage.
Inverter Over Temperature	Temperature anomaly, the temperature of the interior of the inverter is excessively high and out of the safe range.	① Check whether the inverter is directly exposed to the sunlight. ② Reduce ambient temperature.
DCI Fault	DC Injection Hight. Inverter detects a higher DC component in AC output.	① Restart the inverter, wait a moment for inverter recovery. ② If the fault occurs repeatedly, please contact Sunways.
Bus Voltage Fault	BUS voltage is over-high.	① Restart the inverter, wait a moment for inverter recovery. ② If the fault occurs repeatedly, please contact Sunways.
SCI Fault	Internal communication fails. Caused by a strong external magnetic field etc.	① Restart the inverter, wait a moment for inverter recovery. ② If the fault occurs repeatedly, please contact Sunways.
SPI Fault	Internal communication fails. Caused by a strong external magnetic field etc.	① Restart the inverter, wait a moment for inverter recovery. ② If the fault occurs repeatedly, please contact Sunways.

Error Message	Description	Troubleshooting
E2 Fault	Internal storage anomaly. Caused by a strong external magnetic field etc.	① Restart the inverter, wait a moment for inverter recovery. ② If the fault occurs repeatedly, please contact Sunways.
GFCI Device Fault	GFCI device anomaly.	① Restart the inverter, wait a moment for inverter recovery. ② If the fault occurs repeatedly, please contact Sunways.
AC Transducer Fault	AC transducer anomaly.	① Restart the inverter, wait a moment for inverter recovery. ② If the fault occurs repeatedly, please contact Sunways.
Relay Check Fail	Self-checking of relay fails. neutral & ground cable are not connected well on AC side or just occasional failure.	① Check use multi-meter if there is high voltage (normally should be lower than 10V) between N&PE cable on AC side. If the voltage higher than 10V, it means the Neutral & ground cable are not connected well on AC side or restart inverter. ② If the neutral & ground cable are connected well, please contact Sunways.
Flash Fault	Internal storage anomaly. Caused by a strong external magnetic field etc.	① Restart the inverter, wait a moment for inverter recovery. ② If the fault occurs repeatedly, please contact Sunways.
External Fan Fault	External fan anomaly.	① Stop the inverter and disconnect the AC&DC cables. ② Check whether the fan is blocked by foreign matters. If not, replace the fan.
Internal Fan Fault	Internal fan anomaly.	① Restart the inverter, wait a moment for inverter recovery. ② If the fault occurs repeatedly, please contact Sunways.

※ 7.2 PV System for Ground Faults

A ground fault may be present if the inverter beeps, the red LED lights up and the Error Message "GFCI Fault" are being displayed in the Results menu on the inverter user interface. At the same time, the Sunways monitoring system will also issue an alarm.

※ 7.3 Maintenance

 Danger	Risk of inverter damage or personal injury due to incorrect service! Always keep in mind that the inverter is powered by dual sources: PV strings and utility grid. Before any service work, observe the following procedure. ① Disconnect the AC circuit breaker and then set the DC load-break switch of the inverter to OFF; ② Wait at least 5 minutes for inner capacitors to discharge completely; ③ Verify that there is no voltage or current before pulling any connector.
 Caution	Keep non-qualified persons away! A temporary warning sign or barrier must be posted to keep non-qualified persons away while performing electrical connection and service work.
 Attention	Restart the inverter only after removing the fault that impairs safety performance. Never arbitrarily replace any internal components. For any maintenance support, please contact Sunways. Otherwise, Sunways shall not be held liable for any damage caused.
 Note	Servicing of the device in accordance with the manual should never be undertaken in the absence of proper tools, test equipment or the latest revision of the manual which has been clearly and thoroughly understood.

Items	Methods	Period
System clean	Check the temperature and dust of the inverter. Clean the inverter enclosure if necessary. Check if the air inlet and outlet are normal. Clean the air inlet and outlet if necessary.	Six months to a year (it depends on the dust contents in air.)

8 Technical Parameters

Model	STS-3KTL	STS-3KTL-P	STS-3.6KTL	STS-3.6KTL-P
Input				
Start-up Voltage (V)	120	80	120	80
Max. DC Input Voltage (V)	600	600	600	600
Rated DC Input Voltage (V)	360	360	360	360
MPPT Voltage Range (V)	100~550	100~550	100~550	100~550
No. of MPP Trackers	2	2	2	2
No. of DC Inputs per MPPT	1/1	1/1	1/1	1/1
Max. Input Current (A)	12.5/12.5	15/15	12.5/12.5	15/15
Max. Short-circuit Current (A)	15/15	20/20	15/15	20/20
Back feed current to the array (A)	0	0	0	0
Output				
Rated Output Power (W)	3,000	3,000	3,600	3,600
Max. Output Power (W)	3,300	3,300	3,960①	3,960①
AC output rated apparent power (VA)	3,000	3,000	3,600	3,600
Max. Apparent Power (VA)	3,300	3,300	3,960①	3,960①
Rated Output Voltage (V)	220/230	220/230	220/230	220/230
Rated AC Frequency (Hz)	50/60	50/60	50/60	50/60
AC output rated current （A）	15	15	18②	18②
Max. Output Current (A)	15	15	18②	18②
The measured Inrush current (A)	13.5A@44μs	13.5A@44μs	13.5A@44μs	13.5A@44μs
Maximum output fault current (A)	50	50	50	50
Maximum output overcurrent protection （A）	50	50	50	50
Power Factor	0.8 leading …0.8 lagging			
Max. total harmonic distortion	<3% @Rated Output Power			
DCI	<0.5%In	<0.5%In	<0.5%In	<0.5%In
Efficiency				
Max. Efficiency	98.1%	98.1%	98.1%	98.1%
European Efficiency	97.5%	97.5%	97.5%	97.5%

Model	STS-3KTL	STS-3KTL-P	STS-3.6KTL	STS-3.6KTL-P
MPPT Efficiency	99.9%	99.9%	99.9%	99.9%
Protection				
DC Reverse Polarity Protection	Integrated			
Insulation Resistance Protection	Integrated			
Surge Protection	Integrated			
Over-temperature Protection	Integrated			
Residual Current Protection	Integrated			
Islanding protection	Frequency shift, Integrated			
AC Short-circuit Protection	Integrated			
AC Over-voltage Protection	Integrated			
General Data				
Class of Equipment	Class 1			
Over Voltage Category	Mains: OVC III; PV: OVC II;			
Dimensions (mm)	410W*360H*120D			
Weight (KG)	13	13	13	13
Protection Degree	IP65	IP65	IP65	IP65
Self-consumption at Night (W)	<1	<1	<1	<1
Topology	Transformer less			
Operating Temperature Range (° C)	-30~60	-30~60	-30~60	-30~60
Relative Humidity	0~100%	0~100%	0~100%	0~100%
Operating Altitude (m)	3000	3000	3000	3000
Cooling	Natural Convection			
Noise Level (dB)	<25	<25	<25	<25
Display	OLED & LED			
Communication	RS485/WiFi/GPRS/LAN/4G (Optional)			
Compliance	NB/T 32004、IEC62109、IEC62116、VDE 4105、VDE 0126、UTE C15-712-1、AS4777、C10/11、CEI 0-21、RD1699、NBR16149、IEC61727、IEC60068、IEC61683、EN50549、EN61000			

① 3680W for the regulation of G98/G99 ② 16A for the regulation of G98/G99

Model	STS-4.2KTL	STS-4.2KTL-P	STS-4.6KTL	STS-4.6KTL-P
Input				
Start-up Voltage (V)	120	80	120	80
Max. DC Input Voltage (V)	600	600	600	600
Rated DC Input Voltage (V)	360	360	360	360
MPPT Voltage Range (V)	100~550	100~550	100~550	100~550
No. of MPP Trackers	2	2	2	2
No. of DC Inputs per MPPT	1/1	1/1	1/1	1/1
Max. Input Current (A)	12.5/12.5	15/15	12.5/12.5	15/15
Max. Short-circuit Current (A)	15	20/20	15	20/20
Back feed current to the array (A)	0	0	0	0
Output				
Rated Output Power (W)	4,200	4,200	4,600	4,600
Max. Output Power (W)	4,600	4,600	4,600	4,600
AC output rated apparent power (VA)	4,200	4,200	4,600	4,600
Max. Apparent Power (VA)	4,600	4,600	4,600	4,600
Rated Output Voltage (V)	220/230	220/230	220/230	220/230
Rated AC Frequency (Hz)	50/60	50/60	50/60	50/60
AC output rated current （A）	21	21	21	21
Max. Output Current (A)	21	21	21	21
The measured Inrush current (A)	31.5A@55μs	31.5A@55μs	31.5A@55μs	31.5A@55μs
Maximum output fault current (A)	50	50	50	50
Maximum output overcurrent protection （A）	50	50	50	50
Power Factor	0.8 leading …0.8 lagging			
Max. total harmonic distortion	<3% @Rated Output Power			
DCI	<0.5%In	<0.5%In	<0.5%In	<0.5%In
Efficiency				
Max. Efficiency	98.1%	98.1%	98.1%	98.1%
European Efficiency	97.5%	97.5%	97.5%	97.5%
MPPT Efficiency	99.9%	99.9%	99.9%	99.9%

Model	STS-4.2KTL	STS-4.2KTL-P	STS-4.6KTL	STS-4.6KTL-P
Protection				
DC Reverse Polarity Protection	Integrated			
Insulation Resistance Protection	Integrated			
Surge Protection	Integrated			
Over-temperature Protection	Integrated			
Residual Current Protection	Integrated			
Islanding protection	Frequency shift, Integrated			
AC Short-circuit Protection	Integrated			
AC Over-voltage Protection	Integrated			
General Data				
Class of Equipment	Class 1			
Over Voltage Category	Mains: OVC III; PV: OVC II;			
Dimensions (mm)	410W*360H*120D			
Weight (KG)	13	13	13	13
Protection Degree	IP65	IP65	IP65	IP65
Self-consumption at Night (W)	<1	<1	<1	<1
Topology	Transformer less			
Operating Temperature Range (° C)	-30~60	-30~60	-30~60	-30~60
Relative Humidity	0~100%	0~100%	0~100%	0~100%
Operating Altitude (m)	3000	3000	3000	3000
Cooling	Natural Convection			
Noise Level (dB)	<25	<25	<25	<25
Display	OLED & LED			
Communication	RS485/WiFi/GPRS/LAN/4G (Optional)			
Compliance	NB/T 32004、IEC62109、IEC62116、VDE 4105、VDE 0126、UTE C15-712-1、AS4777、C10/11、CEI 0-21、RD1699、NBR16149、IEC61727、IEC60068、IEC61683、EN50549、EN61000			

Model	STS-5KTL	STS-5KTL-P	STS-6KTL	STS-6KTL-P
Input				
Start-up Voltage (V)	120	80	120	80
Max. DC Input Voltage (V)	600	600	600	600
Rated DC Input Voltage (V)	360	360	360	360
MPPT Voltage Range (V)	100~550	100~550	100~550	100~550
No. of MPP Trackers	2	2	2	2
No. of DC Inputs per MPPT	1/1	1/1	1/1	1/1
Max. Input Current (A)	12.5/12.5	15/15	12.5/12.5	15/15
Max. Short-circuit Current (A)	15	20/20	15	20/20
Back feed current to the array (A)	0	0	0	0
Output				
Rated Output Power (W)	5,000	5,000	6,000	6,000
Max. Output Power (W)	5,500③	5,500③	6,600	6,600
AC output rated apparent power (VA)	5,000	5,000	6,000	6,000
Max. Apparent Power (VA)	5,500	5,500	6,600	6,600
Rated Output Voltage (V)	220/230	220/230	220/230	220/230
Rated AC Frequency (Hz)	50/60	50/60	50/60	50/60
AC output rated current （A）	25④	25	28.7	28.7
Max. Output Current (A)	25④	25④	28.7	28.7
The measured Inrush current (A)	31.5A@55μs	31.5A@55μs	31.5A@55μs	31.5A@55μs
Maximum output fault current (A)	50	50	50	50
Maximum output overcurrent protection （A）	50	50	50	50
Power Factor	0.8 leading …0.8 lagging			
Max. total harmonic distortion	<3% @Rated Output Power			
DCI	<0.5%In	<0.5%In	<0.5%In	<0.5%In
Efficiency				
Max. Efficiency	98.1%	98.1%	98.1%	98.1%
European Efficiency	97.5%	97.5%	97.5%	97.5%
MPPT Efficiency	99.9%	99.9%	99.9%	99.9%

Model	STS-5KTL	STS-5KTL-P	STS-6KTL	STS-6KTL-P
Protection				
DC Reverse Polarity Protection	Integrated			
Insulation Resistance Protection	Integrated			
Surge Protection	Integrated			
Over-temperature Protection	Integrated			
Residual Current Protection	Integrated			
Islanding protection	Frequency shift, Integrated			
AC Short-circuit Protection	Integrated			
AC Over-voltage Protection	Integrated			
General Data				
Class of Equipment	Class 1			
Over Voltage Category	Mains: OVC III; PV: OVC II;			
Dimensions (mm)	410W*360H*120D			
Weight (KG)	13	13	13	13
Protection Degree	IP65	IP65	IP65	IP65
Self-consumption at Night (W)	<1	<1	<1	<1
Topology	Transformer less			
Operating Temperature Range (° C)	-30~60	-30~60	-30~60	-30~60
Relative Humidity	0~100%	0~100%	0~100%	0~100%
Operating Altitude (m)	3000	3000	3000	3000
Cooling	Natural Convection			
Noise Level (dB)	<25	<25	<25	<25
Display	OLED & LED			
Communication	RS485/WiFi/GPRS/LAN/4G (Optional)			
Compliance	NB/T 32004、IEC62109、IEC62116、VDE 4105、VDE 0126、UTE C15-712-1、AS4777、C10/11、CEI 0-21、RD1699、NBR16149、IEC61727、IEC60068、IEC61683、EN50549、EN61000			

sunways

No. 1, Second Road, Green Industrial Zone, Chongshou Town,
Cixi City, ZheJiang Province, PRC
www.sunways-tech.com
service@sunways-tech.com

S11-00032-02