CARLO GAVAZZI
Automation Components

CARLO GAVAZZI



Solutions for Renewable Energy Systems

EcoEnergy
equipment

Carlo Gavazzi Automation Components

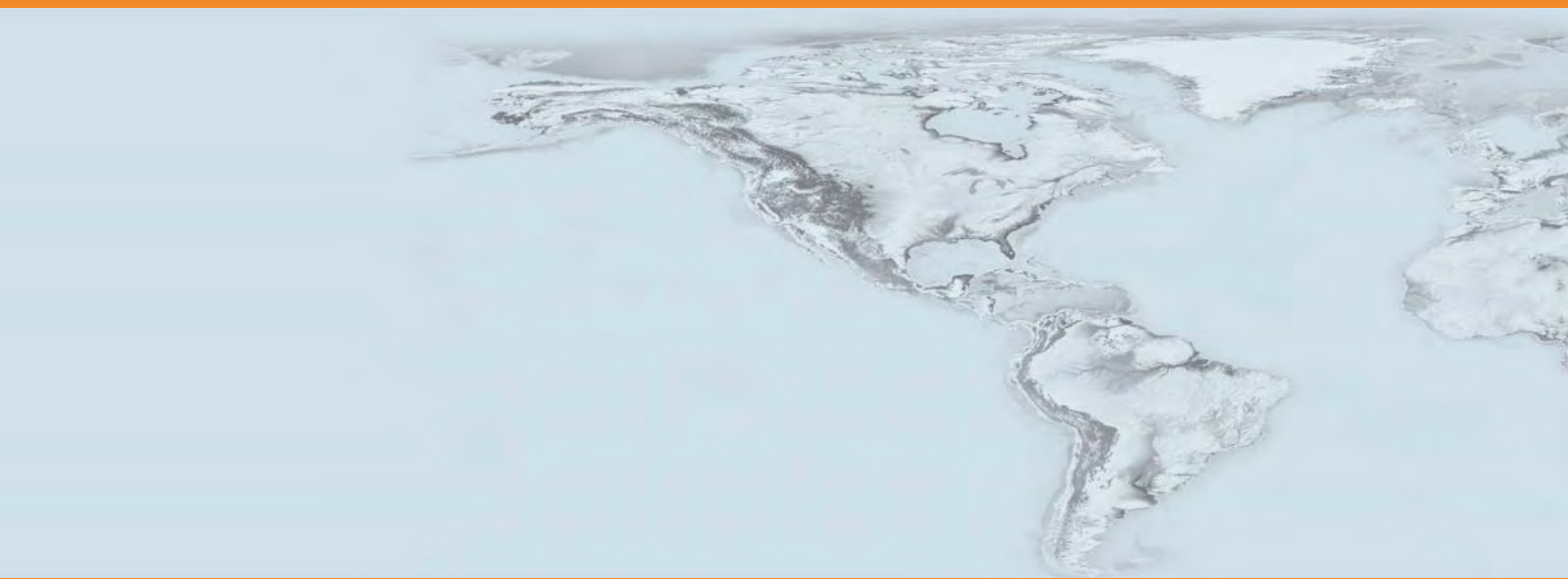





Providing components for automation

Carlo Gavazzi Automation is a multinational electronics group active in the design, manufacture and marketing of electronic equipment targeted at the global markets of industrial and building automation.

Our history is full of firsts and our products are installed in a huge number of applications all over the world. With 80 years of successful operation, our experience is unparalleled.

Our core competence in automation spans four product lines: Sense, Switch, Control and Fieldbus.

Our wide array of products includes sensors, monitoring relays, timers, solid-state relays, electronic motor controllers, energy management equipment and fieldbus systems.

We focus our expertise on offering state-of-the-art product solutions in selected market segments.

Our customers include original equipment manufacturers of packaging machines, plastic-injection moulding machines, food and beverage production machines, conveying and material handling equipment, door and entrance control systems, lifts and escalators, as well as heating, ventilation and air-conditioning devices.

We have our headquarters in Europe and numerous offices around the world. Our R&D competence centres and production sites are located in Denmark, Italy, Lithuania, Malta and the People's Republic of China. We operate worldwide through 21 wholly-owned sales companies and selected representatives in more than 65 countries, from the Pacific Rim in the East to the United States in the West.

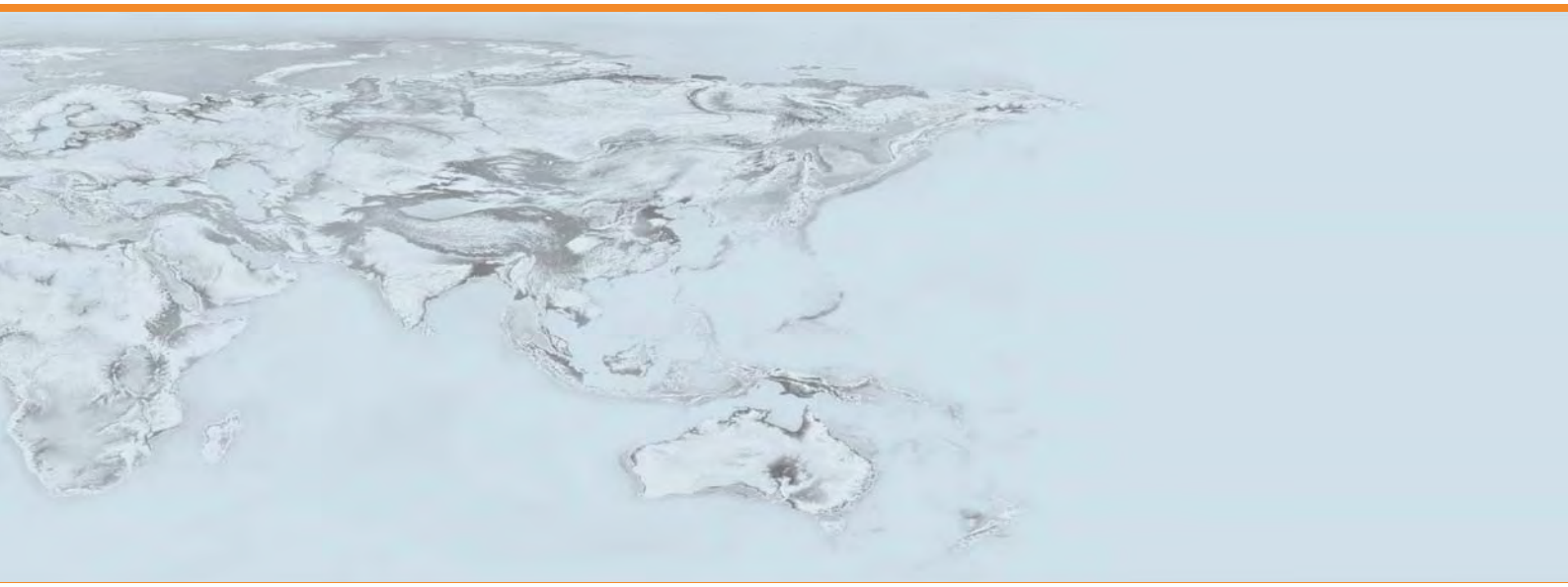





Optimizing use of renewable energy sources

The increasing demand for energy, availability and costs of oil and issues of pollution make alternative sources of renewable energy essential. Sun and wind energy can be transformed into electricity that can be directly used or fed into the grid according to national regulations.

Renewable energy in combination with energy efficiency is the basis of sustainable development and respect for the environment in which we all live.

Our wide expertise is focused on developing and offering an EcoEnergy package of products and devices for the Renewable Energy market, specifically Photovoltaic and Wind power plants.

Our objective is to offer - to system integrators and customers - advanced and reliable equipment, expert technical support and efficient after-sales service.

PHOTOVOLTAIC SYSTEMS

The growing development of cost-effective solar energy technology has great potential to benefit our world.
Solar technologies diversify the energy supply, reduce our dependence on fossil fuels, improve air quality and off-set greenhouse gas emissions.
Carlo Gavazzi offers complete and modular solutions to monitor and control the efficiency of Photovoltaic plants.
Our product range for solar solutions includes inverters, solar battery chargers, energy meters and interface protections.

MICRO AEOLIC SYSTEMS

The term wind power describes the process by which the wind is used to generate mechanical power or electricity.
Wind turbines convert the kinetic energy in the wind into mechanical power that can then be utilized.
Carlo Gavazzi is able to offer a complete package for wind power generation.

CARLO GAVAZZI
Automation Components



Solar Energy

EcoEnergy
equipment



Presentation	**2**
Solar Energy	**4**
Inverter	
ISMG 1	**8**
ISMGT 1	**12**
ISGA 1 / ISGE 1	**16**
ISMG 3	**18**
Solar Battery Charger	
SunBright	**22**
Solar Control Solutions	
Eos Array/Eos Array Lite	**26**
Eos Box	**26**
String Box	
Eos ASB	**30**
Wind Energy	**32**
Complementary	**46**

The energy that the sun delivers to the earth's surface is equal to 89 PW (89 million GW). Several technologies have been developed in order to harness this energy: solar thermal, solar concentration plants and photovoltaic energy.
Solar thermal consists of installing particular panels in which water is heated by the sun in order be used it for heating systems or for the hot water itself to be used.
In *Solar concentration* plants the sunlight is captured by special mirrors that reflect the light onto a tank or pipes containing a special liquid which is heated up to several hundred degrees.
Photovoltaic is energy generated directly by PV panels. The electricity can then be used to charge batteries, by means of photovoltaic battery chargers, or is fed into the public utility grid through grid connected inverters.
The global electricity demand is roughly 18 TW, of which almost 90% is produced by using nuclear and fossil sources.
As the total PV capacity installed in 2009 was only 23 GW, an insignificant figure if compared to the global electricity demand (0.0013%), there is enormous potential for the growth of this type of electricity generating system.
The CO_2 emissions of PV technology are negligible if compared to any fossil fuel technology energy production: this is also why PV is the fastest-growing renewable energy technology, and costs are expected to drop faster than those of other electricity sources.
The estimated lifetime of a PV module is 30 years. Furthermore, the module's performance is very high, providing over 80% of the initial power after 25 years, which makes photovoltaic a very reliable technology in the long term. Europe has set a target of 20% of energy to be produced by renewable sources by the year 2020. The PV share will most probably be the mainstream energy source in Europe and cover up to 12% of the electricity demand, with 390 GWp installed and an electricity production of around 460 TW/h (source: EPIA, 2010)





Solar Energy

Carlo Gavazzi intends to contribute to this change and for this reason has used its considerable experience in energy management for the development of a new range of products for renewable energy. The first product of this type, the DPC02, a grid monitoring relay, was launched in 2004. Today, apart from the PV modules, Carlo Gavazzi can provide most components for a PV plant installation, both for power generation and plant monitoring.

PV plants can be divided into 2 main types:
- Grid connected
- "Island" (Off grid)

Grid Connected installations are the most common in commercial and residential areas. They are installed on roofs in residential, business or industrial sites. Modules are installed on the ground in photovoltaic farms. This is a typical installation for large portions of unused land in areas which are unpopulated but close to cities.
On both roof or ground, grid-connected PV installations the energy produced by the PV modules is delivered to the inverters and then fed into the public grid. In residential and business installations, if the demand is higher than the production, the balance of missing energy is withdrawn from the grid. When the demand is lower than the produced energy, the excess is sold to the DNO (Distribution Network Operator).
In countries where there are "feed-in tariffs" there is a big advantage in selling the energy excess to the DNO, as the cost of the purchased energy is much less than what is paid for the energy sold to the utility. This mechanism enables the pay-back of investment in a shorter time. In the long run, no more support will be required to help the development of photovoltaic electricity. It is expected that photovoltaic will be competitive with electricity prices (at least in Europe, with a contribution of 60% of the global cumulative installed capacity) by 2020, with the so called "grid parity" (source: EPIA, 2010).
Island installations are typical of remote or rural areas far from any public utility grid. In these plants the energy produced by the PV modules is used to charge batteries. The energy of the batteries can then be used in order to power DC loads or it can be converted into AC voltage by means of battery powered inverters. Often the battery charging comes from more than one renewable source: photovoltaic, wind and/or water turbines. A combination of these sources increases the potential for battery charge in almost all conditions.

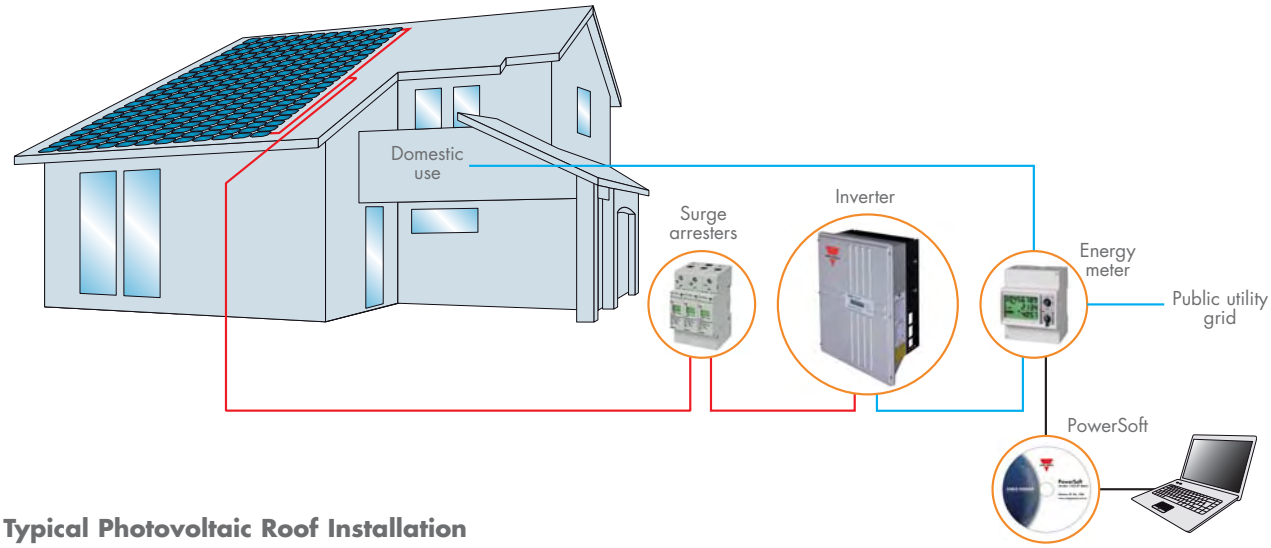

Typical Photovoltaic Roof Installation





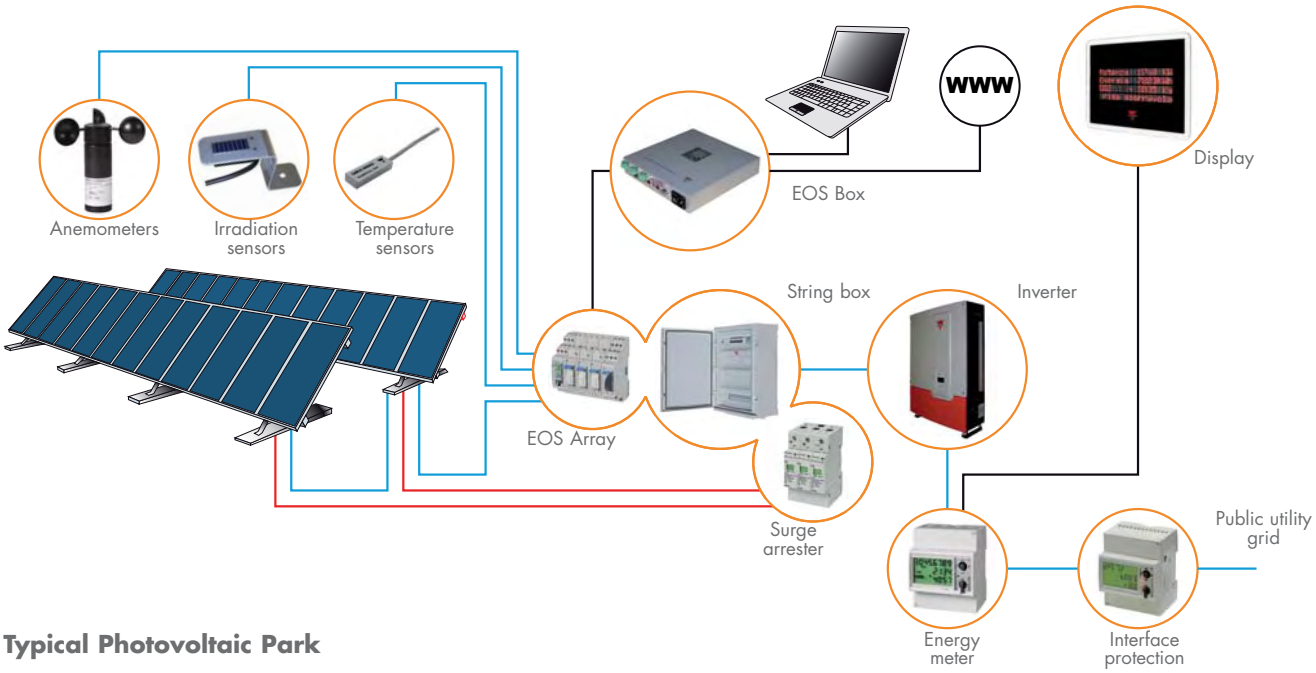

Typical Photovoltaic Park

ISMG 1
Single-phase, grid tied PV inverter



The ISMG 1 is a family of PV inverters dedicated to household and small installations. Having 2 or 3 inputs, each with an independent MPP tracker, it is especially suitable for typical East-West installations, or when part of the modules in some hours of the day might be shaded by chimneys, trees or other buildings, increasing the energy yield via the reduction or mismatching and partial shading losses.
The exclusive Smart MPPT technology ensures high yield, even in the case of mist or a cloudy sky.
MPP voltage from 100 VDC makes it particularly suitable for areas with low irradiation. The integrated data display with 3 indication LED's provides immediate monitoring of the inverter operational status, grid values and alarm messages. ISMG 1 inverters feature a superior cooling design with internal temperature control.
ISMG 1s are equipped with system monitoring and interface protection, according to major European recommendations. The anti-islanding function guarantees secure disconnection in case of circuit isolation due to grid failure or disconnection, and avoids isolated operation.
Installation is hassle-free, with IP65 protection, MC4 connectors and dual comm ports for easy chaining.



Maximize solar energy production

• Low Voltage MPP Input
MPP start voltage 100 VDC enables ISMG 1 inverters to start energy production when the irradiation is still very low.

• 2 or 3 independent String Inputs
The efficient MPP tracking can handle up to 2 or 3 independent MPP tracking inputs, each one controlled by exclusive smart MPP technology, which ensures the increase of energy up to 20%, thanks to the fully functional PV string control software.

• Transformerless with RCMU
These devices are transformerless but equipped with an RCMU circuit in order to monitor and limit the DC current injection on the grid.

• Superior cooling design
The ISMG 1 inverters have a very good thermal design. Their inner temperature is normally with full load around 55°C: other inverters normally work at 10°C. This highlighted working temperature makes the ISMG 1 more reliable and efficient in the long term, due to less electronic component stress.
Derating starts at ambient temperature of 55°C. Few inverters can claim such thermal performance.

• Interface protection and Anti-Islanding
The integrated interface protection can be configured according to the major national DNO recommendations: VDE0126-1-1, DK5940, RD1660/RD661.
Timings and values of other recommendations can be configured in the firmware upon request.
An interface protection circuit monitors the grid and, in case of deviation from the preset values, the unit is disconnected from the grid by means of double redundant relays. The disconnection also occurs if the grid is not active, preventing the unit from working as an island (anti-islanding) and ensuring the safety of personnel involved in grid servicing.

• Built-in Comms
Built in RS232/RS485 serial communication (with 2 connectors for easy chaining) Modbus RTU protocol for remote monitoring.

• Easy commissioning
ISMG 1 inverters do not require set-up or programming. The bracket can be locked to the inverter for theft protection. IP65 makes it suitable for indoor as well as outdoor installation.

CARLO GAVAZZI Automation Components. Specifications are subject to change without notice. Illustrations are for example only.

Photovoltaic DC Input Data

Model	ISMG 1 45 PL3	ISMG 1 45	ISMG 1 50	ISMG 1 60
Nominal DC power	3.15 kW	3.48 kW	4.0 kW	4.85 kW
Max. DC power	3.6 kW	4.0 kW	4.64 kW	5.38 kW
Max. DC voltage	500 V			
MPP voltage range	100 to 450 V			
Max. DC current per string	10 A			
Number of MPP trackers	1~2			1~3
Overvoltage protection	Yes			
Ground fault monitoring	Yes			
Polarity safeguard	Short circuit diode			
Surge absorption	MOV varistor			

AC Output Data

Model	ISMG 1 45 PL3	ISMG 1 45	ISMG 1 50	ISMG 1 60
Rated output AC power	2.99 kW	3.3 kW	3.8 kW	4.6 kW
Max. AC power	3.0 kW	3.8 kW	4.4 kW	5.1 kW*
Power factor	> 0.99			
Distortion factor (THD)	< 3%			
Grid connection	Single phase; True sine-wave			
AC voltage range	rated 230 VAC			
AC nominal current	13 A	14.34 A	16.52 A	20 A
Frequency range	rated 50 Hz			
Safety class	I			
All pole sensitive RCMU	Yes			

* German version limited to 4.99 kW

General Data

Model	ISMG 1 45 PL3	ISMG 1 45	ISMG 1 50	ISMG 1 60
Max. efficiency	96.2% @ 350 VDC		96.3% @ 350 VDC	
EU efficiency	95.4% @ 350 VDC		95.1% @ 350 VDC	95.4% @ 350 VDC
Stand-by consumption	< 10 W			
Night consumption	0 W			
Protection device	Grid monitoring system			
Anti-islanding monitoring	Yes			
Grid monitoring	Integrated interface protection, Programmable parameters according to local DNO recommendations			

Environmental Data

Model	ISMG 1 45 PL3	ISMG 1 45	ISMG 1 50	ISMG 1 60
Operating temperature @ 350 VDC	-10°C to +60°C / 14°F to 140°F without derating; Shut-down at 75°C/167°F		-10°C to +55°C / 14°F to 131°F without derating; Shut-down at 75°C/167°F	
Storage temperature	-25°C to +80°C / -13°F to 176°F			
Humidity	0 to 95% (without condensation)			
Cooling	Forced ventilation (2 x IP54 external fans)			
Protection degree	IP65 (according to DIN EN60529)			
Noise level	< 40 dB			

CARLO GAVAZZI Automation Components. Specifications are subject to change without notice. Illustrations are for example only.

Mechanical Data

Model	ISMG 1 45 PL3	ISMG 1 45	ISMG 1 50	ISMG 1 60
User interface	2 x 16 LCD Data display and 3 monitoring LEDs			
AC connectors	1 x Wieland			
DC connectors	2 x 2 Multicontact (MC4 series)			3 x 2 Multicontact (MC4 series)
Serial interface connectors	2 x RJ45			
Housing material	Powder coated aluminium			
Weight	22.5 kg/49.60 lb			23.0 kg/50.70 lb

Standard Norms and Certifications

Model	ISMG 1 45 PL3	ISMG 1 45	ISMG 1 50	ISMG 1 60
Safety Standard	EN50178			
EMC capability	EN61000-3-2, EN61000-3-3 EN61000-3-11, EN61000-3-12 EN61000-6-2, EN61000-6-3			
Grid monitoring	ES: according to RD 1663/2000; RD 661/2007 IT: according to DK5940 Ed. 2.2 April 2007 FR, EN, DE: according to VDE0126-1-1			

Temperature Range

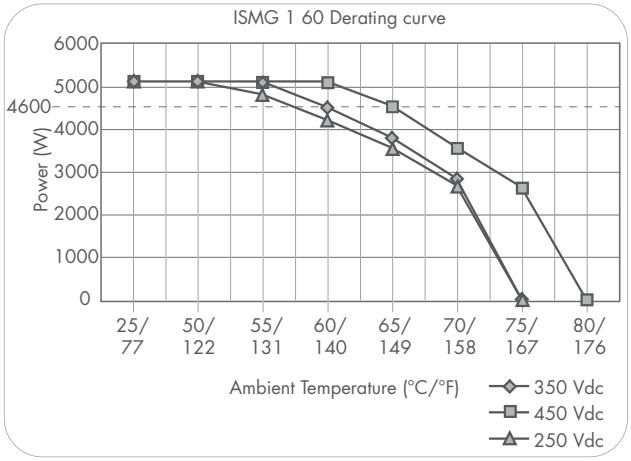

Cooling fan control	
Command	Heat-sink temperature (°C/°F)
FAN start	50/122
FAN stop	45/113
Derating temperature	72/161.6
Inverter shut-down temperature	80/176

CARLO GAVAZZI Automation Components. Specifications are subject to change without notice. Illustrations are for example only.

Efficiency

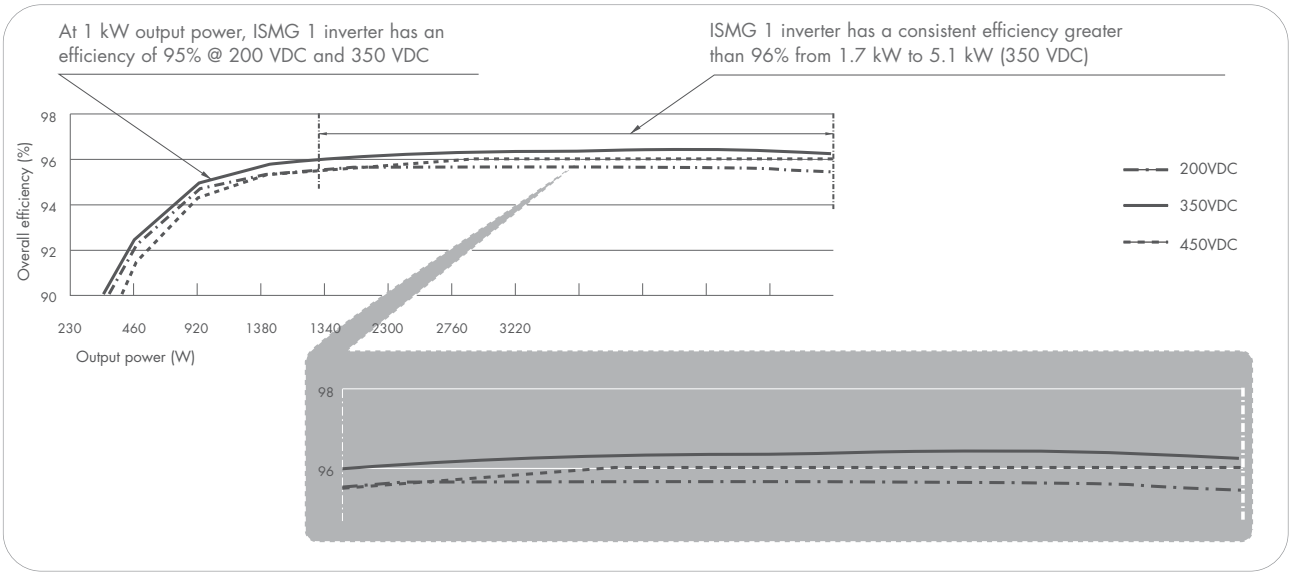

Model	ISMG 1 45 PL3	ISMG 1 45	ISMG 1 50	ISMG 1 60
Efficiency 5% P_{nom}	84.42%	84.42%	85.70%	87.65%
Efficiency 10% P_{nom}	91.19%	91.19%	90.94%	92.04%
Efficiency 20% P_{nom}	94.27%	94.27%	94.43%	94.86%
Efficiency 30% P_{nom}	95.37%	95.37%	95.36%	95.62%
Efficiency 50% P_{nom}	96.04%	96.04%	95.58%	96.11%
Efficiency 100% P_{nom}	96.28%	96.28%	96.07%	96.10%

Multiple/Single Panel String Mode

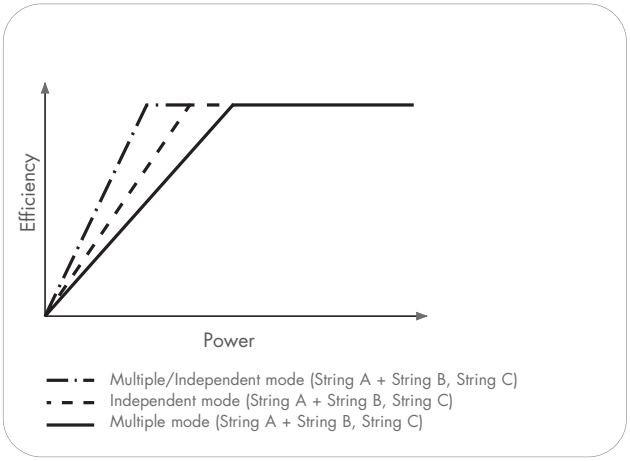

Dimensions

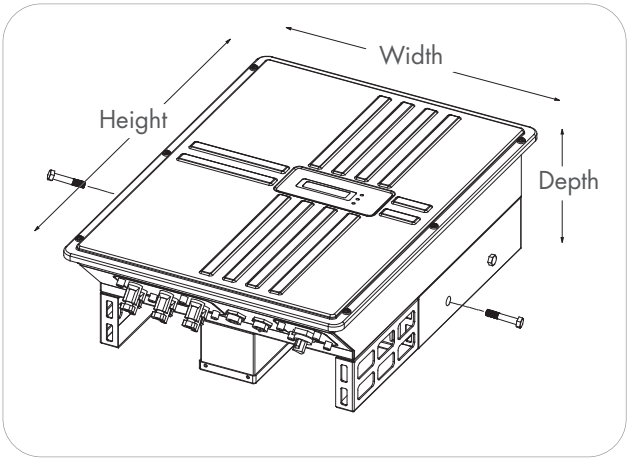

Model	All Models
H x W x D mm/inches	580 x 422 x 182 (+6.5 mounting support) 22.83" x 16.61" x 7.17" (+0.26" mounting support)

CARLO GAVAZZI Automation Components. Specifications are subject to change without notice. Illustrations are for example only.

ISMGT 1
HF transformer, grid tied PV inverter



The ISMGT 1 is a family of PV inverters dedicated to household and small installations. They are, equipped with a high frequency transformer that galvanically isolates the DC input section from the AC part, making them suitable for all those applications where it is mandatory to isolate input from output.
They can be used with thin film modules that are usually connected with positive or negative grounding.
A single MPP tracker - up to 4 strings inputs - can be jumpered inside the special connection box.
The connection box, also equipped with a front power disconnector, provides the grounding inside the jumpers.
ISMGT 1 inverters feature efficiency up to 97%, one of the highest performances among the transformer inverters of their class.
Integrated data display with 3 indication LEDs provides immediate monitoring of the inverter operational status, grid values and alarm messages. ISMGT 1 inverters feature superior cooling design with internal temperature control.
These inverters, as well as other Carlo Gavazzi grid tied inverters, are equipped with system monitoring and interface protection, according to major European recommendations. The anti-islanding function guarantees secure disconnection in case of circuit isolation due to grid failure or disconnection, and avoids isolated operation.



Optimize performance of PV plants

• Wide MPP input range
The MPP of this series of inverters has a range of 350 V, allowing operation from 200 up to 550 VDC.

• Power disconnector and fuse
The front disconnector enhances the safety of this device. It allows the cutting of both AC and DC connections and enables the opening the front cover only when power is OFF. On the bottom of the connection box there is also a fuse holder for the ground fuse.

• 3 or 4 string inputs
The inverter is equipped, according to the model, with 3 or 4 string inputs which are managed by a single MPPT circuit. The inputs can also be configured by jumpers to be positive or negative grounded inside the connection box.

• Superior cooling design
The ISMGT inverters have a very good thermal design. The inner temperature is electronically controlled and the fans are activated when necessary. Derating ambient temperature starts at 58°C, which makes it the best choice for hot places.

• Built-in comms
Built in RS232/RS485 serial communication (with 2 connectors for easy chaining) Modbus RTU protocol for remote monitoring.

• High frequency transformer
The DC input side is galvanically insulated from the AC output side by mean of high frequency transformer. It is possible to use all types of modules with the inverter: poly, mono crystalline or amorphous.

• Interface protection and Anti-islanding
The integrated interface protection can be configured according to the major national DNO recommendations: VDE0126-1-1, DK5940, RD1660/RD661 or even G.83
Timings and values of other recommendations can be configured in the firmware upon request.
An interface protection circuit monitors the grid and, in case of deviation from the preset values, the unit is disconnected from the grid by means of double redundant relays. The disconnection also occurs if the grid is not active, preventing the unit from working as an island (anti-islanding) and ensuring the safety of personnel involved in grid servicing.

CARLO GAVAZZI Automation Components. Specifications are subject to change without notice. Illustrations are for example only.

Photovoltaic DC Input Data

Model	ISMGT 1 28	ISMGT 1 38	ISMGT 1 40	ISMGT 1 50
Nominal DC power	3.0 kW	4.0 kW	4.2 kW	5.2 kW
Max. DC power	3.1 kW	4.1 kW	4.3 kW	5.3 kW
Max. DC voltage	600 VDC			
MPP voltage range	200-550 VDC			
Full MPP range	350 VDC			
Max. DC current per string	15 A			
Number of MPP trackers	1			
Max. No. of parallel strings for MPP	3		4	
Overvoltage protection	Yes			
Ground fault monitoring	Yes, with led indication and integrated fuse			
Polarity safeguard	Diode + transformer insulation			
Surge absorption	Replaceable MOV varistors			

AC Output Data

Model	ISMGT 1 28	ISMGT 1 38	ISMGT 1 40	ISMGT 1 50
Max. AC power	2.8 kW	3.8 kW	4.0 kW	5.0 kW
Power factor	> 0.99 @ nominal power			
Distortion factor (THD)	< 3%			
Grid connection	Single phase, 230 VAC			
AC voltage range	Depending upon setting 230 VAC nominal			
Max. AC current	12.2A	16.6 A	17.4 A	21.8 A
Frequency range	Depending upon setting 50 Hz Nominal			
Safety class	I			
All pole sensitive RCMU	Yes			

General Data

Model	ISMGT 1 28	ISMGT 1 38	ISMGT 1 40	ISMGT 1 50
Max. efficiency	96.4%		96.5%	
EU efficiency	95.4%	95.7%	95.8%	
Night consumption	0.5 W			
Protection device	Grid monitoring system			
Anti-islanding monitoring	Yes			
Grid monitoring	Integrated interface protection with programmable parameters according to local DNO recommendations			

Environmental Data

Model	ISMGT 1 28	ISMGT 1 38	ISMGT 1 40	ISMGT 1 50
Operating temperature range	-25°C to +65°C / -13°F to 149°F			
Max. full power operating temperature without derating	+58°C / 136°F	+55°C / 131°F	+58°C / 136°F	+54°C / 129°F
Cooling	Convection	Controlled forced ventilation		
Protection degree	IP44			
Installation location	Indoor / Outdoor protected			

CARLO GAVAZZI Automation Components. Specifications are subject to change without notice. Illustrations are for example only.

Derating Curves

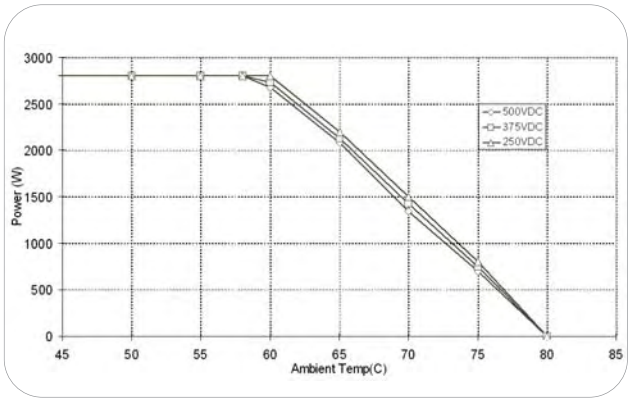

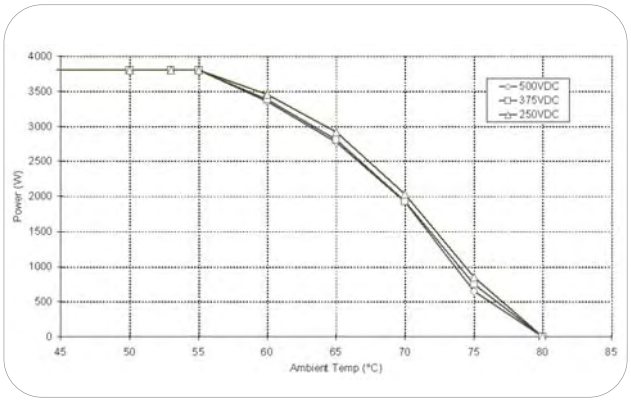

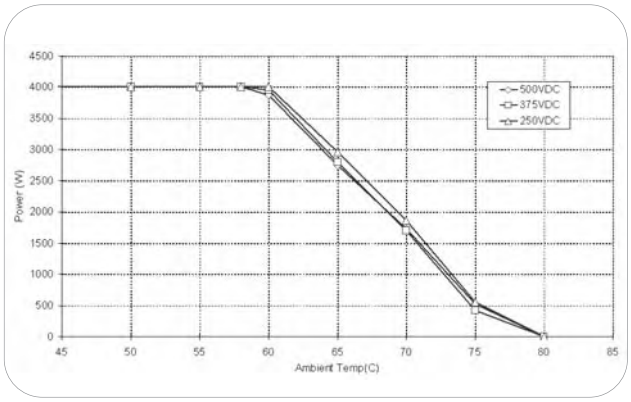

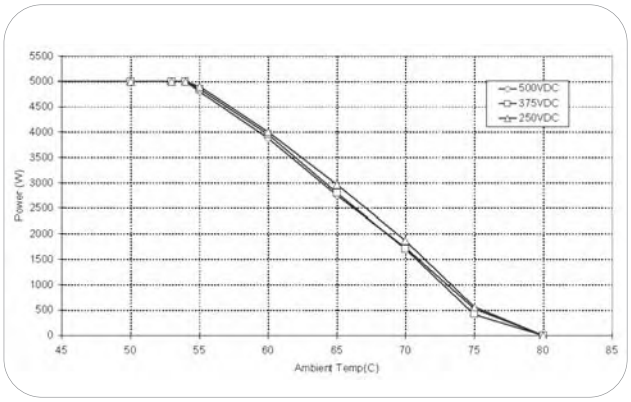

Efficiency Curves

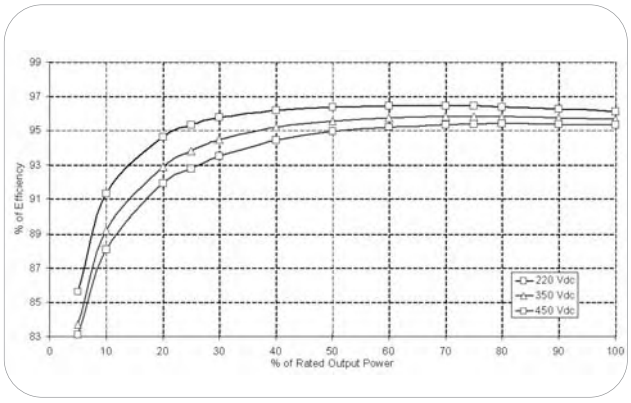

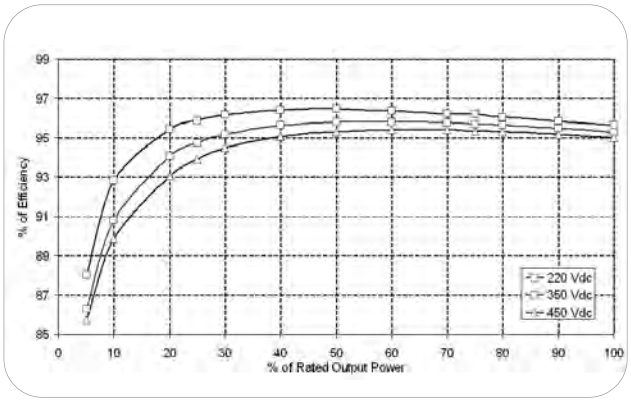

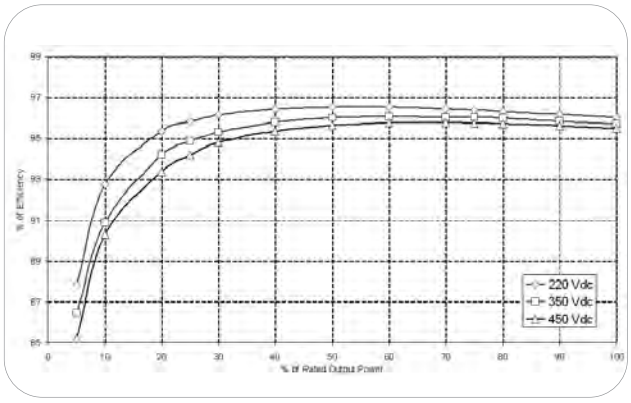

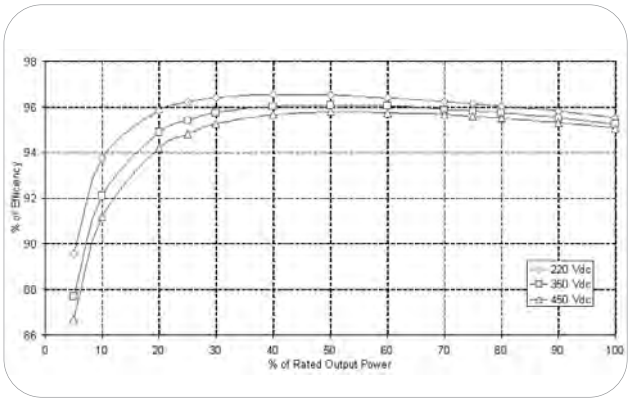

CARLO GAVAZZI Automation Components. Specifications are subject to change without notice. Illustrations are for example only.

Mechanical Data

Model	ISMGT 1 28	ISMGT 1 38	ISMGT 1 40	ISMGT 1 50
Inverter weight	23 kg		28 kg	
Shipping weight	27 kg		32 kg	

Dimensions

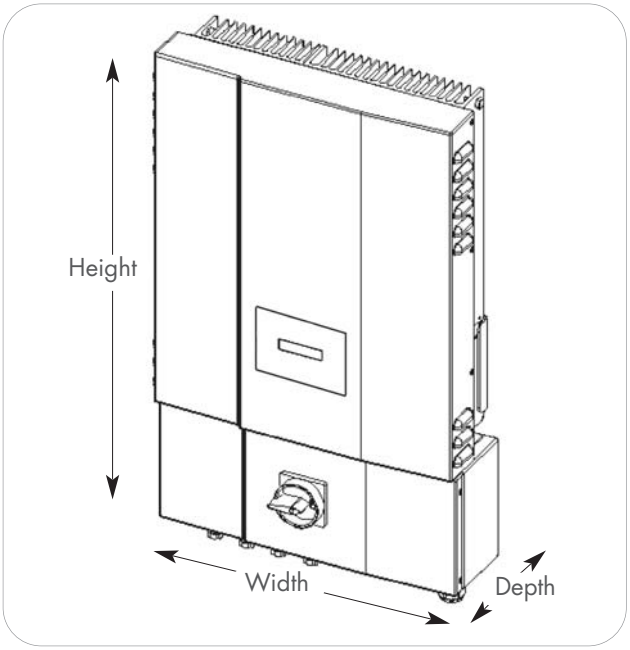

Model	ISMGT 1 28	ISMGT 1 38	ISMGT 1 40	ISMGT 1 50
H x W x D mm/inches	768x454x175 (+6.5 mounting supp.) 30.2"x17.9"x6.9" (+0.26" mounting supp.)		768x454x210 (+6.5 mounting supp.) 30.2"x17.9"x8.3" (+0.26" mounting supp.)	

CARLO GAVAZZI Automation Components. Specifications are subject to change without notice. Illustrations are for example only.

ISGA 1, ISGE 1

Single-phase, compact grid tied PV inverter

The ISGA 1 inverter has been designed in order to meet the specific requirements of the North American market. The ISGE 1 is the European version of the ISGA 1 Inverter. There are 5 different sizes in the family from 2 up to 7 kW. The design of these inverters, the use of high quality components, component-saving thermal management and the highest certified quality standards guarantee a long life.
The display clearly indicates the status, as well as the yield of the PV system. In combination with the built-in keypad it allows the installer a quick start-up.
The ISGA 1 and ISGE 1 inverters have outstanding resistence to frequently occurring distortions in the electric mains and therefore guarantee smooth power generation. The holistic MPP tracking procedure combines all the advantages of proven procedures. This enables optimal electricity generation and the highest possible solar yields.



The ventilation of the inverter is carried out by natural air convection but can be further improved with the addition of the optional fan operated cooling pack.



Ensure optimal electricity generation

Wide range
The ISGA 1/ ISGE 1 family, besides being designed for both the North American and European market, features 5 different models up to 7 kW: 2 kW, 3 kW, 4 kW, 5 kW and 7 kW. The ISGE155DE and ISGE170DE comply with the German VDEW, norm thus can provide maximum output power only if each unit is connected to another 2 units, one for each phase. In the case of failure of one unit, the other remaining operating units will limit the output power to 4.6kW (as specified by the VDEW norm)

Built-in DC disconnector
All ISGA/E 1 inverters are equipped with an on-board DC disconnector switch in order to cut off the DC power from the PV side in case of emergency or in case of service.

ISG Cool
These inverters can operate at full output power up to 35°C without any specific cooling requirement. The maximum operating ambient temperature without derating can be increased up to 50°C with the ISGA/E 1 Cool kit that can be installed on the back of the inverters.

Integrated graphic display and keyboard
The operational status of the inverters is always clearly indicated on the front integrated graphic display, together with the indication of the Grid Voltage, Grid Frequency, AC current, AC power, DC voltage and DC current. The display is also equipped with a 5 key pad, with which it is possible to customise, by means of an easy-to-use menu, the settings according to specific requirements.

Serial Communication
Like Carlo Gavazzi inverters, the ISGA/E 1 series inverters are also equipped with serial communication. The Dsub connector is placed underneath the inverter in a protected and very easily accessible position.

MC4 connectors
The ISGE 1 is equipped with MC4 connectors for fast and easy connection.

Product to be released soon

CARLO GAVAZZI Automation Components. Specifications are subject to change without notice. Illustrations are for example only.

Photovoltaic DC Input Data

Model	ISGA 1 20	ISGA 1 30	ISGA 1 40	ISGA 1 55	ISGA 1 70
Nominal DC power	2.2 kW	3.2 kW	4.3 kW	5.8 kW	7.4 kW
Max. DC power	2.8 kW	4.2 kW	5.6 kW	6.4 kW	8.0 kW
Max. DC voltage	750 VDC				
MPP voltage range	330 - 650 VDC				
Max Input current	8.2 A	12.0 A	17.0 A	18.0 A	25.0 A
Surge Protection	Varistor				

AC Output Data

Model	ISGA 1 20	ISGA 1 30	ISGA 1 40	ISGA 1 55	ISGA 1 70
Nominal AC Power	2.0 kW	3.0 kW	4.0 kW	5.5 kW	7.0 kW
Max. AC power	2.2 kW	3.3 kW	4.4 kW	6.0 kW	7.5 kW
Max. Output Current	9.5 A	14.3 A	19.0 A	26.0 A	32.6 A
Grid connection	208 / 240 VAC 1PH				
AC voltage range	184 - 265 V				
Power factor	1.0				
Distortion factor (THD)	< 3%				
Nominal frequency range	60 Hz (ISGA 1) / 50 Hz (ISGE 1)				

General Data

Model	ISGA 1 20	ISGA 1 30	ISGA 1 40	ISGA 1 55	ISGA 1 70
Max. efficiency	96.75%	96.8%	96.85%	96.85%	96.85%
EU efficiency	95.42%	96.02%	95.94%	96.05%	96.05%
Night consumption	3 W				
Protection device	Grid monitoring system				
Anti-islanding monitoring	Yes				
RCMU	Yes				
Ground leakage monitoring	Yes				
AC shortcircuit protection	Yes				
Grid monitoring	ISGA 1: UL1741, CSA C22.2 No 107.1-01, IEEE 1547 ISGE 1: VDE0126-1-1, DK 5940, RD 1660/RD 661				

Environmental Data

Model	ISGA 1 20	ISGA 1 30	ISGA 1 40	ISGA 1 55	ISGA 1 70
Operating temperature range	-20°C to +74°C				
Max. full power operating temperature without derating	-20°C to +35°C (without ISG Cool Kit) -20°C to +50°C (with ISG Cool Kit)				
Cooling	Natural air convection or Fans with ISG Cool kit				
Protection degree	IP 44				
Installation location	Indoor / Outdoor protected				
Noise level	<35dB (without ISG Cool Kit)				

Mechanical Data

Model	ISGA 1 20	ISGA 1 30	ISGA 1 40	ISGA 1 55	ISGA 1 70
User interface	LCD graphic display with integrated 5 key pad				
AC connectors	screw clamp terminals				
DC connectors	ISGA 1: Screw clamp terminals ISGE 1: 4 x MC4				
Serial interface connectors	1 x Dsub 9 poles				
Housing material	Powder coated steel with extruded aluminium back heatsink				
Weight	21 Kg / 46.3 lb		26 Kg / 57.32 lb		
Dimensions H x W x D mm/inches	550x250x187 / 21.7x9.8x7.4"		550x250x222 / 21.7x9.8x8.7"		

CARLO GAVAZZI Automation Components. Specifications are subject to change without notice. Illustrations are for example only.

ISMG 3

3 phase, grid tied PV inverter 17 to 22 kW

The Carlo Gavazzi ISMG 3 series PV inverters convert the energy generated by the solar modules into true sinewave balanced three phase 400 VAC power to be fed into the utility grid.
The anti-islanding and the grid monitoring protections ensure system safety and compliance with the most relevant national recommendations for grid connected generating systems.
2 string inputs, managed by separate MPPT circuits and the very wide MPP range, allow system design flexibility and ensure power generation in many different irradiation situations.
All units are equipped with built in serial communication for the remote monitoring of the production data for daily and monthly produced energy. It is possible to use standard remote monitoring units in order to read and show the data stored in the device.
The memory can store up to 12 months of data and the integrated graphic display can show the actual measurements, or last 100 alarms by text message or stored produced energy data. The display backlight changes colour (red, green, white) according to the operational status, showing at a glance, even from a far, the inverter status.
To increase safety and make installation easier, all ISMG 3 inverters are also equipped with a DC switch, mounted on the side, with which makes it possible to disconnect the input strings at any time.
They can be installed either internally or externally, on walls or on the ground, with their special "floor mounting stand" that can be ordered separately.



Feed power effectively into the grid

• Wide high voltage MPP input
The MPP range is very wide, from 300 VDC to 850 VDC, maintaining conversion efficiencies above 97% throughout all input voltage ranges.

• 2 Input strings
The ISMG 3 is equipped with 2 efficient trackers, with "Smart MPP Technology". The input strings can be connected separately, enabling flexibility in module selection and PV system sizing, or connected in parallel with one MPP tracker to achieve higher efficiency.

• Easy commissioning
ISMG 3 inverters do not require set-up or programming. For wall mounting a special bracket is provided. For floor mounting a kit can be provided upon request. The bracket can be locked to the Inverter for theft protection.

• Graphic display and Minilogger
128 x 64 Graphic display with 5 keys integrated keypad, enables the reading of actual production data: Input string voltages (VDC), string currents (A), output power (kW), grid voltage (VAC), output current (A), produced energy (kWh). Connected to the integrated minilogger are the trend graphs of energy produced daily (kWh), during the last 31 days, or the energy produced monthly (kWh) during the last 12 months.

• Interface protection and Anti-islanding
The integrated interface protection can be configured according to the major National DNO recommendations: VDE0126-1-1, DK5940, RD1660/RD661. G.83 (with external transformer). Timings and values of other Recommendations can be configured in the firmware upon request.
The interface protection circuit monitors the grid and in case of deviation from the preset values the unit is disconnected from the grid by means of double redundant relays. The disconnection also occurs if the grid is not active, preventing the unit from working as an island (anti-islanding) and ensuring the safety of personnel involved in grid servicing.

• Built-in comms
Built in RS232/RS485 serial communication (with 2 connectors for easy chaining) Modbus RTU protocol for remote monitoring.

• High temperature operation
17 kW inverters work up to 50°C and 22 kW up to 45°C, without derating. Cooling fans are electronically controlled.

• Transformerless with RCMU
These devices are transformerless but equipped with an RCMU circuit in order to monitor and limit the DC current injection on the grid.

CARLO GAVAZZI Automation Components. Specifications are subject to change without notice. Illustrations are for example only.

Photovoltaic DC Input Data

Model	ISMG 3 17	ISMG 3 22
Nominal DC power	17.9 kW	23.1 kW (21 kW*)
Max. DC power	17.9 kW	23.1 kW (21 kW*)
Max. DC voltage	850 V	
MPP voltage range	300 to 850 V	
Max. DC current per string	2 x 21.6 A (43.2 A)	2 x 28.9 A (57.8 A)
Number of MPP trackers	2	
Overvoltage protection	Yes	

AC Output Data

Model	ISMG 3 17	ISMG 3 22
Max. AC power	17 kW	22 kW (19.9 kW*)
Power factor	> 0.99% @ Rated Power	
Distortion factor (THD)	< 5%	
Grid connection	True sine-wave Balanced, 3 Phase	
AC voltage range	3 x 400 VAC (320 to 460 VAC) with progr. interface settings according to local DNO recommendation	
Max. AC current	24.7 A	31.9 A (31.88 A)*
Frequency range	50 Hz to 60 Hz with progr. interface settings according to local DNO recommendation	

* This limit is specific for the IT version (according to DK5940 norm)

General Data

Model	ISMG 3 17	ISMG 3 22
Max. efficiency	97.4%	97.6%
EU efficiency	97.0%	97.2%
Night consumption	1 W	
Protection device	Grid monitoring system (values according to local DNO recommendation)	

Environmental Data

Model	ISMG 3 17	ISMG 3 22
Operating temperature with derating > 50°C	-25°C to +60°C / -13°F to 140°F	
Max. acceptable temperature @ P_{nom}	+50°C / 126°F	+45°C / 121°F
Storage temperature	-25°C to +70°C / -13°F to 158°F	
Cooling	Integrated fans with operation controlled by software	
Protection degree	IP55 (according to DIN EN60529)	
Noise level	< 50 dB	< 55 dB

Standard Norms and Certifications

Model	ISMG 3 17	ISMG 3 22
Safety Standard	EN50178	
EMC capability	EN61000-3-2, EN61000-3-3, EN61000-3-11, EN61000-3-12 EN61000-6-2, EN61000-6-3	
Grid monitoring settings	EN VDE0126-1-1, ES RD 1663/2000, IT DK5940 Ed. 2.2 April 2007 DE VDE0126-1-1, FR VDE0126-1-1	

CARLO GAVAZZI Automation Components. Specifications are subject to change without notice. Illustrations are for example only.

User Interface

Model	ISMG 3 17	ISMG 3 22
Display	128 x 64 LCD graphic display with variable backlight colour	
Keypad	4 key membrane: UP; DOWN; ENTER; ESC	
AC connectors	1 x Wieland	
DC connectors	2 x 2 Multicontact (MC4 series)	
Serial interface connectors	2 x RJ45 (for chain connection)	

Accessible Display Data

Parameter	Unit
Output Voltage for each phase	VAC
Output Freq.	Hz
AC power fed into the grid	W
Produced AC Energy Today	kW/h
Produced AC Energy Total	kW/h
CO2 saved	kg
PV V string A	VDC
PV I string A	A
PV Power A	W
PV V string B	VDC
PV I string B	A
PV Power B	W
Actual VAC grid L1	VAC
Actual Iac grid L1	A
Actual Pac Grid L1	W
Actual VAC grid L2	VAC
Actual Iac grid L2	A
Actual Pac Grid L2	W
Actual VAC grid L3	VAC
Actual Iac grid L3	A
Actual Pac Grid L3	W

Display Graphic Functions

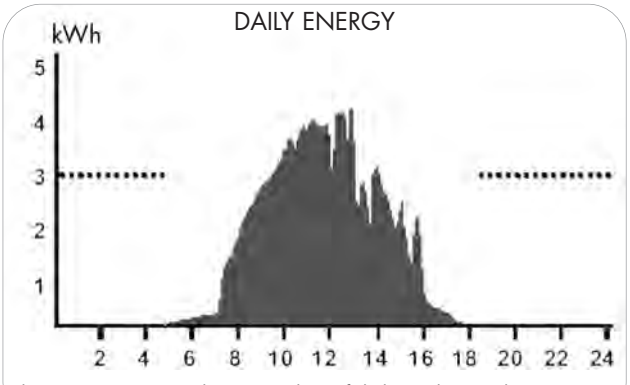

The ISMG 3 can record up to 31 days of daily production charting

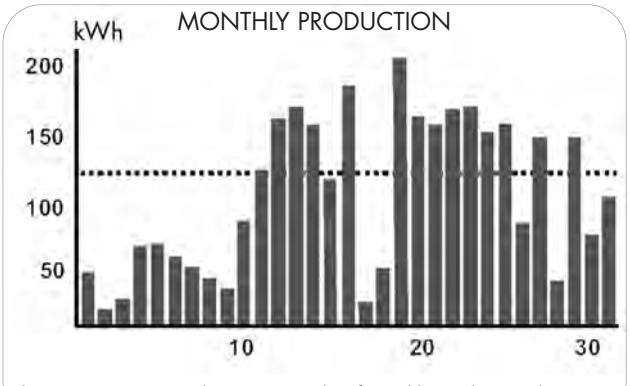

The ISMG 3 can record up to 12months of monthly production charting

Temperature Behaviour

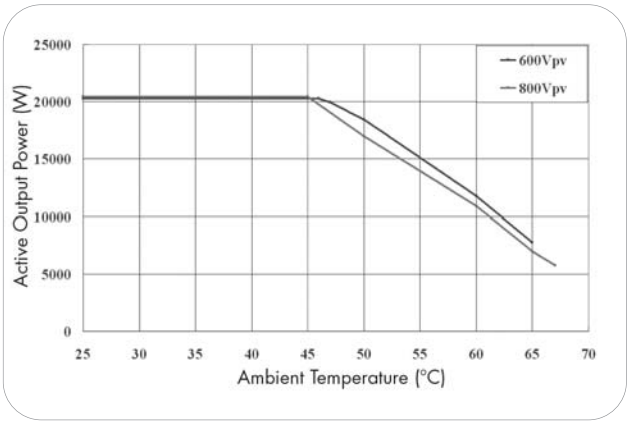

DC Curve

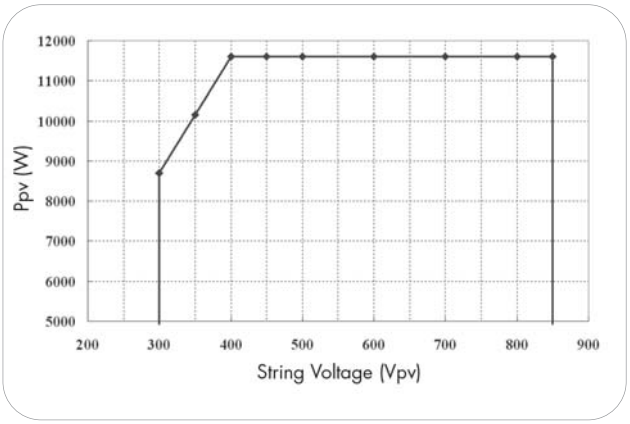

CARLO GAVAZZI Automation Components. Specifications are subject to change without notice. Illustrations are for example only.

MPP Efficiency Diagrams

PV strings in parallel

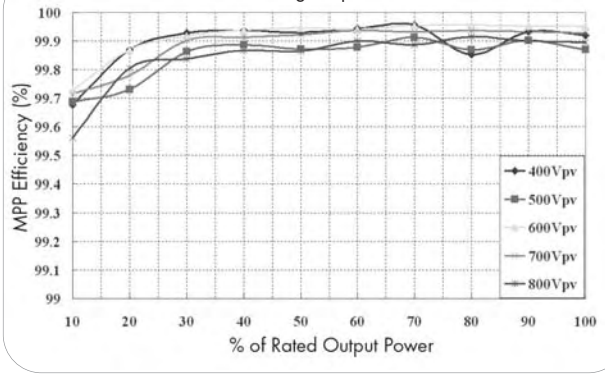

PV strings individually connected

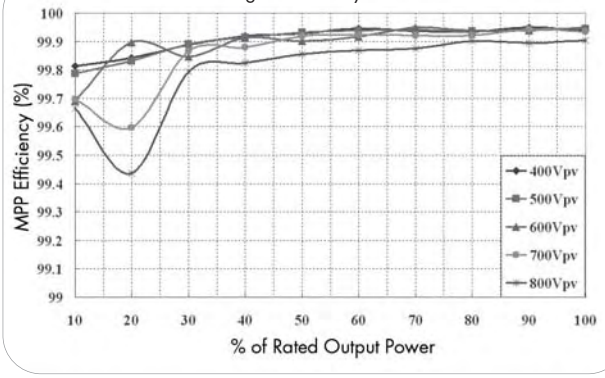

Efficiency Diagrams

ISMG 3 17

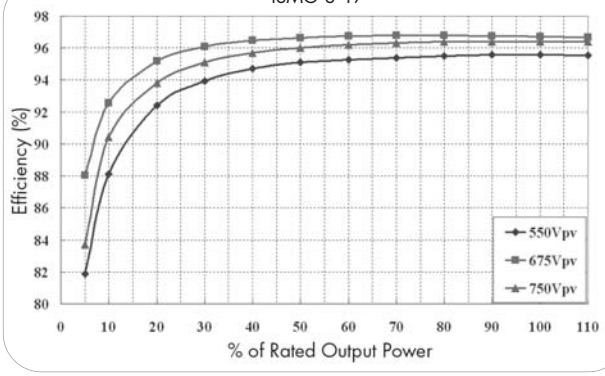

ISMG 3 22

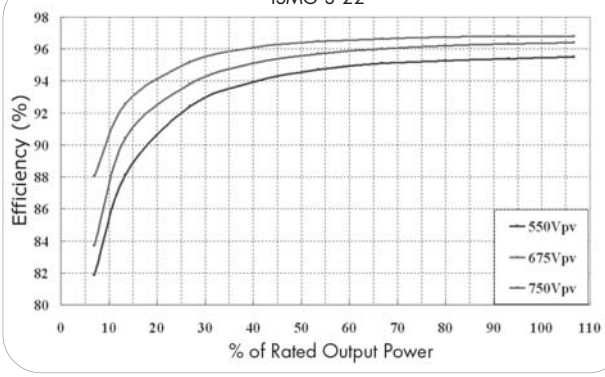

Mechanical Data

Model	**ISMG 3 17**	**ISMG 3 22**
Housing material	Powder coated aluminium	
Weight	74.5 kg/164.2 lb (85 kg/187.4 lb shipping weight)	

Dimensions

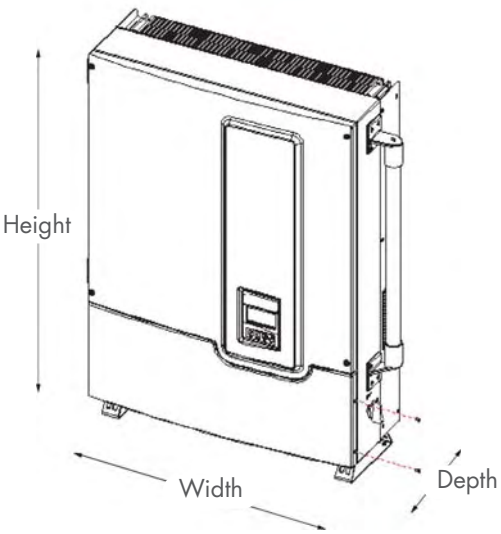

Model	**All Models**
H x W x D mm/inches	890.5 x 751 x 256 (+6.5 mounting support) 35" x 29.57" x 10" (+0.26" mounting support)

CARLO GAVAZZI Automation Components. Specifications are subject to change without notice. Illustrations are for example only.

SBC & SBCLC

SunBright - Solar battery charger

SunBright is a wide family of light-weight solar battery chargers for battery charging currents from 6 A up to 45 A. They are split into 2 main categories: with load control feature SBCLC; without load control SBC.
Each SunBright can be configured to work with any battery type by means of the integrated DIP switch. With this switch it is also possible to configure the battery type and the equalisation mode.
The SBCLC can directly drive the load or light with 16 different preset programs. The ON an OFF times can be related to the day/night cycle that the module detects through the PV panels' irradiation.
The charging method is based on the PWM switching principle optimised for long life battery operation. As there is no MPP tracking, they should preferably be used with the 17 V solar panels in order to limit energy waste.
A set of LEDs indicates at a glance the status of the system and provides immediate indication of any fault, and the type of malfunction, that may occur.
The integrated temperature sensor compensates for possible temperature variations of the battery.

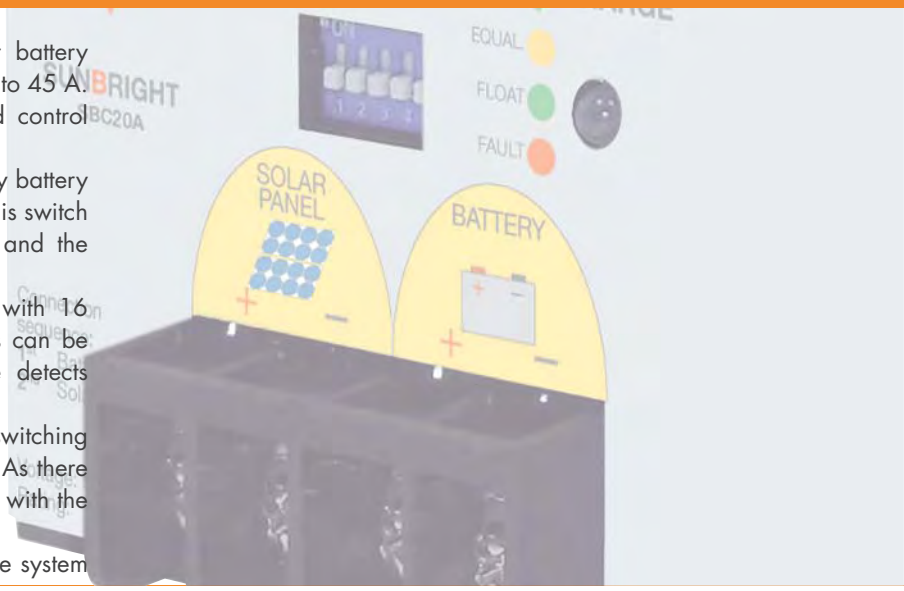



Provide long life operation

• Battery type setting
Before connecting the panel and the battery it is necessary to preset the battery type with the dedicated DIP switch. It is possible to program 12 V, 24 V and 48 V. It is also possible to set the battery type from: Sealed, flooded, NiCd and L16.

• Easy installation
The SunBright battery chargers are very easy to use and install, only a screwdriver is required. Just set the dip switches according to the battery type, then connect the panel and the battery, if necessary the load and that's it!

• Load / light control
The SBCLC series of the SunBright family can also drive a load according to the preset program and the day/night cycle. The state-of-the-art auto detector of day and night has been precisely applied to log the different lengths of night hours for lighting control, no matter where and when (North or South, Winter or Summer) SunBright is installed.

• Battery protection
Besides featuring a PWM charging cycle aimed at providing the longest battery life, in order to prevent the single cells of the battery from failing whilst others are still working, SunBright performs an equalisation cycle which will even all the internal cell imbalances that could lead to premature battery replacement. The equalisation cycle can also be performed manually.
Furthermore, the battery voltage values at which the load will be disconnected can be set on the SBCLC, despite the programmed day/night cycle. This prevents usage of the battery when the charge level is not sufficient.

• Battery temperature sensor
An integrated battery temperature sensor is present on the device in order to electronically control the charging cycles according to the battery heat.

CARLO GAVAZZI Automation Components. Specifications are subject to change without notice. Illustrations are for example only.

Type Selection

Series	Description	Models
SBC	Solar battery charger	6 A 6 A Current rating battery charge 10 A 10 A Current rating battery charge 20 A 20 A Current rating battery charge 30 A 30 A Current rating battery charge
SBCLC	Solar battery charger and load/light control	10 A 10 A Current rating battery charge 20 A 20 A Current rating battery charge 30 A 30 A Current rating battery charge 45 A 45 A Current rating battery charge

Electrical Data

Model	**SBC 6A**	**SBC 10A**	**SBC 20A**	**SBC 30A**
System voltage ratings	12 VDC		12, 24 VDC	
Current ratings - Battery charge control	6 A	10 A	20 A	30 A
Min./Max operating voltage	6 V / 16 V		9 V / 34 V	
Max. solar array Voc	30 V		50 V	
Current consumption	6 mA		9 mA	
High temperature shutdown	50/60 Hz		90°C disconnect solar 70°C reconnect solar	

Model	**SBCLC 10A**	**SBCLC 20A**	**SBCLC 30A**	**SBCLC 45A**
System voltage ratings	12, 24, 48 VDC			
Current ratings - Battery charge control	10 A	20 A	30 A	45 A
Min./Max operating voltage	9 V / 68 V			
Max. solar array Voc	140 V			
Current consumption Normal operation Idling	 ≤25 mA 3 mA			
High temperature shutdown	90°C disconnect solar 70°C reconnect solar / load / diversion load		90°C disconnect load / diversion load	

Environmental Data

Model	**SBC 6A**	**SBC 10A**	**SBC 20A**	**SBC 30A**
Ambient temperature	-40 to +45°C			
Storage temperature	-55 to +85°C			
Humidity	100% (Non condensing) The unit is completely sealed with potting			
Protection degree	IP20 (Only related to terminal board electronic PCB totally potted)			

Model	**SBCLC 10A**	**SBCLC 20A**	**SBCLC 30A**	**SBCLC 45A**
Ambient temperature	-40 to +45°C			
Storage temperature	-55 to +85°C			
Humidity	100% (Non condensing) The unit is completely sealed with potting			
Protection degree	IP20 (Only related to terminal board electronic PCB totally potted)			

CARLO GAVAZZI Automation Components. Specifications are subject to change without notice. Illustrations are for example only.

General Overview

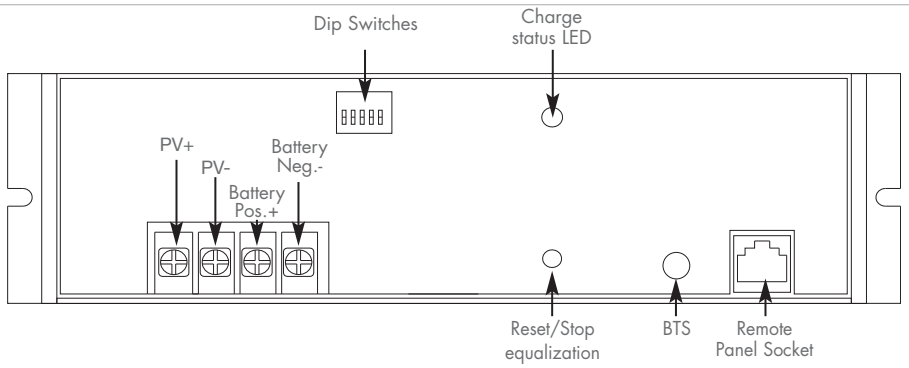

SBC

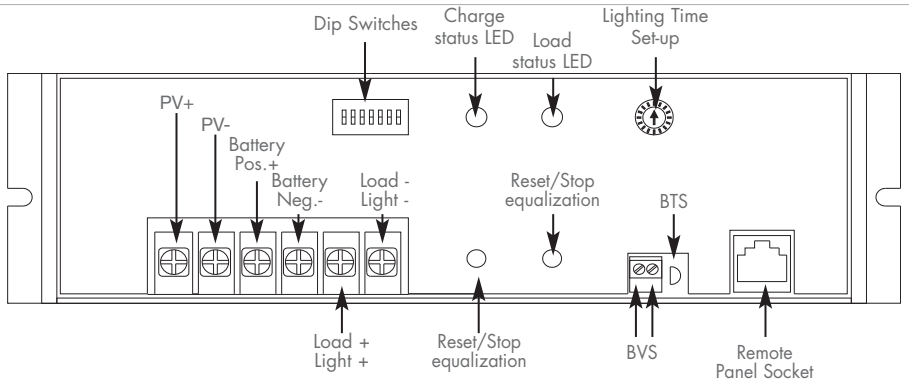

SBCLC

Dimensions (mm)

SBC6A

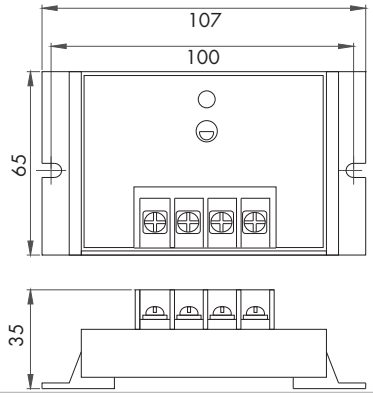

SBC10A - SBC20A

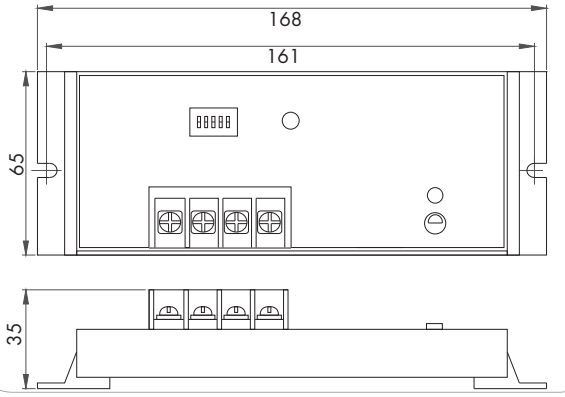

SBC30A

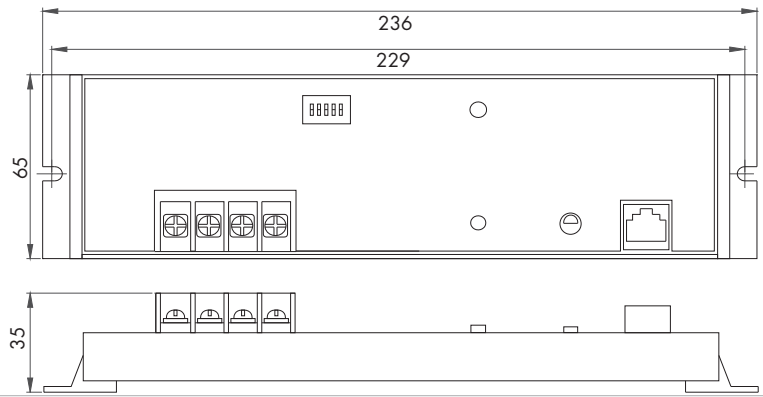

CARLO GAVAZZI Automation Components. Specifications are subject to change without notice. Illustrations are for example only.

Dimensions (mm)

SBCLC10A - SBCLC 20A

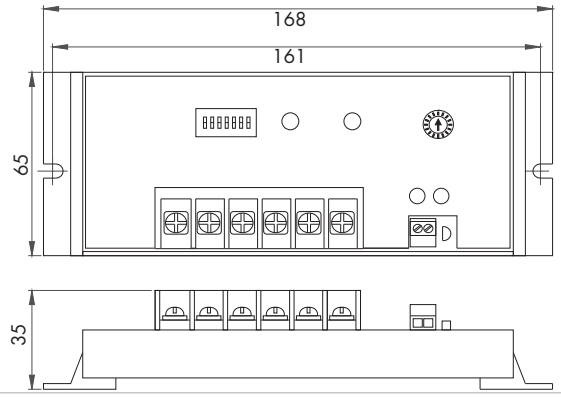

SBCLC30A - SBCLC45A

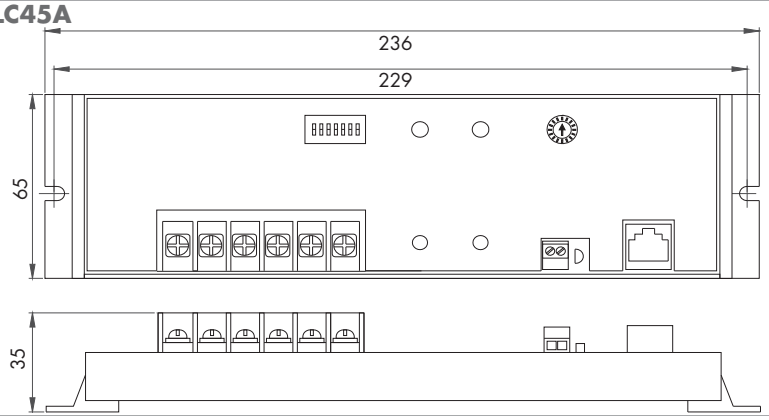

SBCLC - Lighting Set-up Diagram

When setting the lighting set-up mode, DIP Switch 7 should be placed ON. After completing the system connections, select the desired LIGHTING SET-UP option.

Lighting Set-Up Selector

OFF	Light is always OFF.	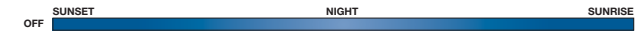
2, 4, 6, 8, 10	Hours light is turned on after sunset.	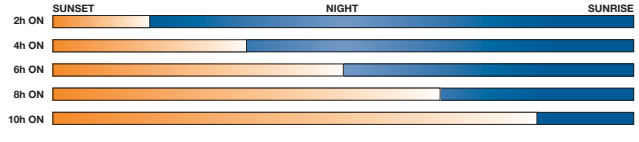
2/1, 3/1. 4/1, 6/1, 2/2, 3/2, 4/2, 6/2, 8/2	Light is turned on after sunset, turned off after the selected number of hours, and turned on again before sunrise. 2/1: Light is turned on for 2 hours after sunset, turned off after 2 hours and turned on again 1 hour before sunrise.	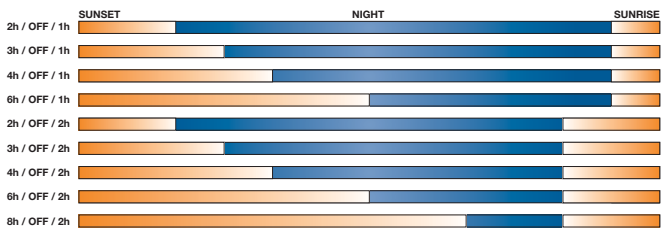
D/D	Dusk-to-Dawn, light is on all night.	

CARLO GAVAZZI Automation Components. Specifications are subject to change without notice. Illustrations are for example only.

Eos Array, Eos Array Lite, Eos Box

The Carlo Gavazzi solution for solar control develops with Eos Array and Eos Box, depending upon the requirements and complexity of the photovoltaic plant. Eos Array and Eos Array Lite are systems comprised of individual modular elements that, when interacting with one another, provide efficient local control of the solar plant. Whether it's a small/medium power or a high power plant, you are assured there is effective information management. The Eos Array provides a compact, simple, versatile and innovative solution, it's modular and can be composed of: VMU-M, the master unit and data logger; VMU-S, the string controller; VMU-P, the environment variable unit and VMU-O, the I/O unit: a mixed combination of up to 16 units in total. Eos Array Lite is the answer to those photovoltaic applications where a less sophisticated monitoring solution is needed. It is based on the same overall concept as Eos Array in terms of modularity and integrated string fuse protection, but its focus is to measure and control only the string current and voltage. Eos Box is a web server that controls and supervises the whole installation, acquiring information from Eos Array groups, inverters, energy meters and interface protection. The Eos Box provides information in a quick and automatic fashion via the internet, so that the data is available wherever you are.





Control and supervise the whole system

• Eos Array:

• Measurement and control functions split into independent modules in order to improve the critical system reliability.

• String efficiency and BOS efficiency measurement are fundamental parameters to evaluate the yield of the photovoltaic plant.

• Local alarm management for fast and easy identification.

• Integrated fuse protection for cost and installation time saving.

• Easy application adaptability - the customer can choose according to his project philosophy which unit/s best suits his application giving him the freedom to find different solutions to his application problems.

• Features expansion capability based on usage of different modules and quantities so as to meet application needs from small (10 kWp) to large solar PV plants.

• Multicolour LEDs provide immediate feedback on variables, alarms, fuse status and communication, showing the relevant details on the display.

• Eos Box:

• Cost effective yield efficiency and plant failure warning with additional manual or automatic database download for easy plant history analysis.

• Plant failure warning by means of e-mail and SMS in the case of external connection via modem. Plant database download by means of EosArraySoft.

• Notification of abnormal conditions as soon as they occur for a prompt service intervention.

• Comprehensive control solution capable of showing efficiency, yield graphs and the management of any useful information which is accessible by the user from any place in the world just by using his PC browser.

CARLO GAVAZZI Automation Components. Specifications are subject to change without notice. Illustrations are for example only.

Eos Array - Functions and Features

		Eos Array Lite	Eos Array
All	Modular concept	Yes	Yes
VMU-M Local Bus Management unit	12 to 28 VDC power supply	Yes	Yes
	RS485 communication port (max. 115.2 kbit/s)	Yes	Yes
	Programming of communication speed and address	Yes	Yes
	Local display with programming pushbutton	Yes	Yes
	Measurement of single string current from VMU-S only	Yes	Yes
	Alarm management on measured variables	Yes	Yes
	Local bus-configuration errors control	Yes	Yes
	Current string monitoring	Yes	
	Power string monitoring		Yes
	String efficiency		Yes
	Event-logger: variables, functions and system alarms		Yes
	Data-logger: V, A, W, Wh, PV cell temperature, air temperature, irradiation		Yes
	First digital input or temperature input: Pt100/Pt1000 (3-wire)		Yes
	Second digital input or temperature input: Pt100/Pt1000 (3-wire)		Yes
VMU-S String Control unit	Local status monitoring by means of LED		Yes
	6-DGT data format for energy		Yes
	4-DGT data format for instantaneous variables	Yes	Yes
	Integrated fuse holder	Yes	Yes
	String voltage measurement up to 1000 V (0.5% RDG)	Yes	Yes
VMU-S String Control unit	String current measurement up to 16 A (0.5% RDG)	Yes	Yes
	String current measurement up to 30 A (0.5% RDG)		Yes
	String power measurement (1.0% RDG)		Yes
	String energy measurement (Class 1)		Yes
	Fuse blow alarm		Yes
	Fuse temperature alarm	Yes	Yes
	Wrong connection (reverse current or voltage)	Yes	Yes
	Configuration errors monitoring	Yes	Yes
VMU-P Environment Measuring unit	Irradiation sensor input: max. 120 mV	Yes	Yes
	First temperature probe input: Pt100/Pt1000 (3 wire)	Yes	Yes
	Short/open circuit on probe inputs	Yes	Yes
	Second temperature probe input: Pt100/Pt1000 (3 wire)		Yes
	Wind speed sensor measuring input		Yes
	Configuration errors monitoring	Yes	Yes
VMU-O Inputs/Outputs unit	First relay output activated by local alarm	Yes	Yes
	First relay output managed as remote command		Yes
	Second relay output activated by local alarm		Yes
	Second relay output managed as remote command		Yes
	First digital input		Yes
	Second digital input		Yes
	Configuration errors monitoring	Yes	Yes

Eos Array - Dimensions (mm)

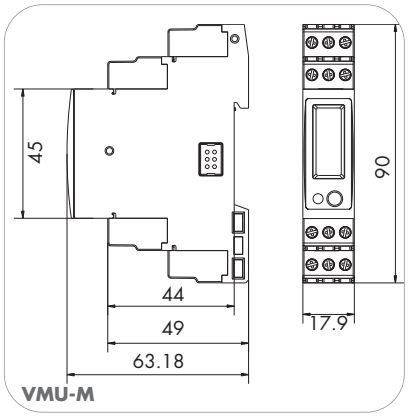

VMU-M

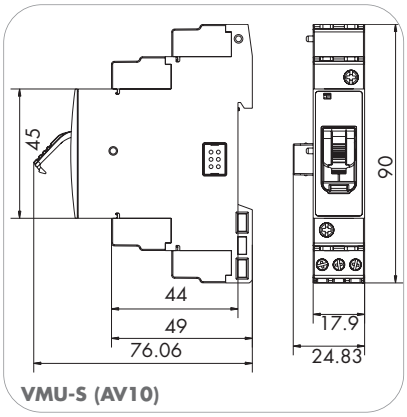

VMU-S (AV10)

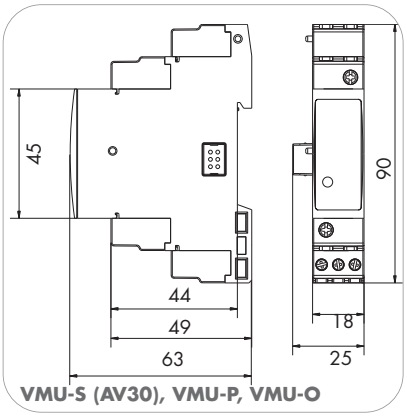

VMU-S (AV30), VMU-P, VMU-O

CARLO GAVAZZI Automation Components. Specifications are subject to change without notice. Illustrations are for example only.

Eos Box - General Data

Type	Embedded PC
Operating system	Windows XP embedded
Operation	Fan-less
Processor	AMD LX800 500MHz
Chipset	AMD LX+CS5536+ITE8888G
BIOS	Phoenix-Award 4Mbit with RPL/PXE LAN Boot ROM. SmartView and customer CMOS backup
Memory	
DDR	256MB SODIMM
DOM	8GB
Back-up Industrial CompactFlash™	8GB Type II (on request)
Communication ports	
RS485	3 ports for Eos Array bus management 1 port for inverter and energy meters
Ethernet	1 for internet/LAN connection 1 for local access
Other Ports	
USB	3, for local access and external modem connection
LED	
Status and Colours	Green for power-on Orange for DOM memory access
Connections	
RS485	3 pole detachable screw terminal block per port
Ethernet	RJ-45 connector (10/100Base-T)
USB	High speed USB 2.0

Eos Box - Power Supply Data

Power Supply	100 to 240 VAC
Power Consumption	70 W

Eos Box - Dimensions (mm)

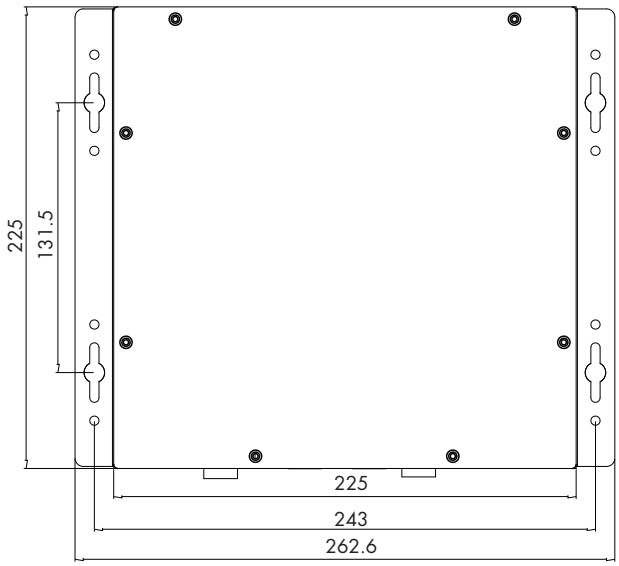

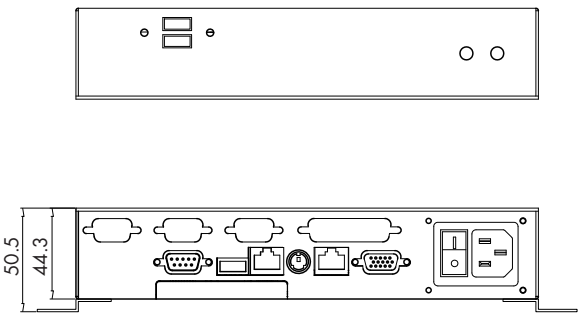

CARLO GAVAZZI Automation Components. Specifications are subject to change without notice. Illustrations are for example only.

Eos Box - Software









Eos Box software pages available:

- Home page:
  Daily AC power of plant.
- Plant page:
  Detailed graphs and data table of all available variables.
- Alarms page:
  alarms, warnings, events, commands list.
- Economy page:
  economical parameters of the installation.
- Information page:
  plant description with relevant technical data, financial highlights, energy production data source.
- IP cam page:
  live images from the photovoltaic park.
- Monitor page:
  combination of main graphs for accurate plant analysis.
- Export page:
  data base export in Excel® spreadsheet.
- Setting page:
  access to the configuration of all parameters of Eos Box.
- Account page:
  access to LAN and Internet configuration.

Eos Box software main functions:

- AC production display.
- DC production display.
- Real time data display.
- Efficiency of the whole photovoltaic park under control (DC and AC part).
- Efficiency of the DC part of the installation.
- Efficiency of the DC to AC conversion inside the inverters.
- BOS: efficiency of the AC part of the photovoltaic park under control.
- Display of: solar irradiation, temperature, wind speed.

CARLO GAVAZZI Automation Components. Specifications are subject to change without notice. Illustrations are for example only.

Eos ASB
String Box

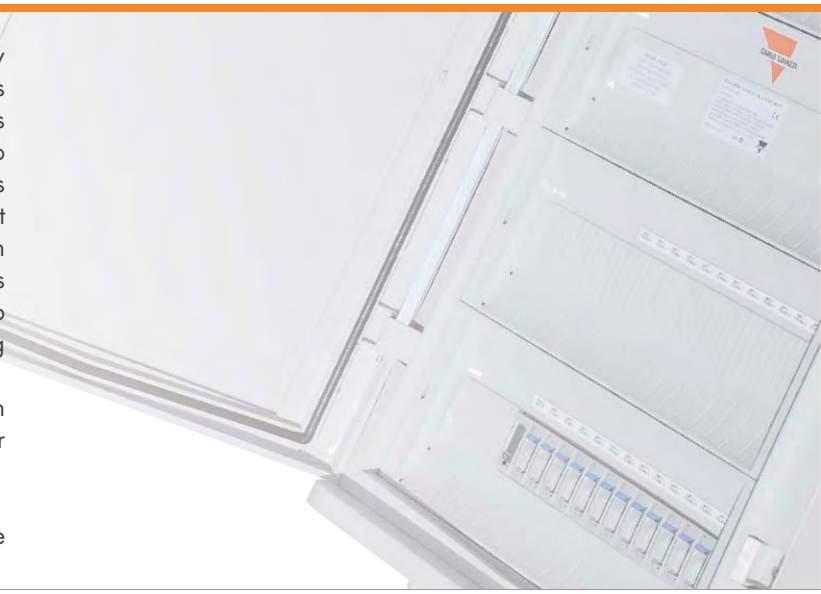

Eos ASB is a string-box based on combinations of Eos Array modules which perform a complete control of the PV strings being connected. The core unit is VMU-M which performs data and event logging and has the additional task to manage the communication bus among different modules like VMU-S the string controller, VMU-P the environment measuring unit (PV cell temperature, air temperature, sun irradiation and wind speed) and VMU-O the I/O unit. This latter unit, when available, can provide two relay outputs so to manage alarms or/and external loads (like a lighting system; a module washing system and so on).
Component control functions like monitoring of switch disconnector status and correct working of surge arrester are available as standard.
The string-box is supplied completely pre-assembled.
All devices in the string box are already wired in the panel.

Thanks to the modular concept of Carlo Gavazzi solar control solutions, the system integrator can size the PV plant according to his project philosophy and install all equipment in a very easy and fast way.



Perform complete control

- **Security and safety features**
  In addition and according to the needed model, two additional functions are available:
  - Antitheft control performed on all modules being connected by means of specific fibre optic sensors (from one two three according the dimension of the area being controlled by the string box);
  - Block diodes on single string in case of application needs.

- **Strings control**
  Eos ASB can manage up to 250 A total strings current with standard string protection.

- **Chassis**
  The string box enclosure is available in two sizes and is made of a special thermoplastic material which grants an IP66 protection degree with proper safety and long life characteristics.

CARLO GAVAZZI Automation Components. Specifications are subject to change without notice. Illustrations are for example only.

General Data

String rated inputs	
Current	12 A @ 60°C
Voltage	1000 VDC
String measurement inputs	
Current	±(0.5% RDG+2 DGT) from 0.05 A to 12 A
Voltage	±(0.5% RDG+2 DGT) from 20 V to 1000 V
Power	±(1% RDG+ 2DGT)
Energy	±(1% RDG)
Protection	
Fuse holder	Integrated into the string module
Fuse size	10.3x38 mm (IEC269-2-1)
Temperature probe inputs	2 inputs (PV module; air)
Type	Pt100, Pt1000
Irradiation sensor input	1 input
Range	0 to 120 mVDC
Accuracy	±(0.1% RDG+1DGT) 25% to 120% FS.
Wind speed sensor inputs	1 input
Range	0 to 1000 Hz max, duty cycle 50%
Accuracy	±(0.01% RDG+1DGT) 25% to 110% FS.
Digital inputs	2 inputs
Purpose	Detection of the status (ON/OFF) of the switch disconnector, Detection of the status of the surge arrester
Digital output	2 outputs
Purpose	Alarm notification as a String alarm or other alarms
Data logging	
Stored data type	Variables: V, A, W, Wh, PV module temperature, air temperature, irradiation, wind speed and string efficiency
Storage interval	Selectable: 1-5-10-15-30-60 minutes
Sampling time	2 s
Storage method	Circular FIFO
Memory type	Flash
Memory retention time	10 years
Events logging	
Type of stored events	Digital output status change (real and virtual alarms), switch disconnector status, string alarms (see "String control") and theft alarm, surge arrester working status. The events are recorded as soon as they occur.
Number of events	Max. 10.000
Storage method	Circular FIFO
Memory type	Flash
Memory retention time	10 years
String control	
Function selection	Match max. control or median control
String window alarm	A window alarm can be set as a string power control
Other variable alarms	The alarms can be connected also to the string current and voltage.
"PV string" efficiency measurement	Three type of controls are available
Antitheft control	Antitheft control on PV modules sensed by means of fibre optic technology
Other controls	Fuse blow detection and wrong PV module connection
Communication port	RS485 or fibre optic according to the model
Purpose	Transmission of all data and alarms All parameter can be programmed using freeware EosArraySoft
Power supply (H)	90 to 260 VAC

Available models with "S" standard protection (up to 250 A)

Model	Eos ASB											
Strings	10	10	12	12	12	12	12	12	12	12	15	13
Power Supply	H	H	H	H	H	H	H	H	H	H	H	H
String fuse (A)	12	12	12	12	12	12	12	12	12	12	12	12
String voltage (kV)	1	1	1	1	1	1	1	1	1	1	1	1
Protection	S	S	S	S	S	S	S	S	S	S	S	S
Environ. measures	No	Yes	No	Yes	No	Yes	No	Yes	No	Yes	No	Yes
Digital I/Os	No	No	Yes	Yes	Yes	Yes	Yes	Yes	Yes	Yes	Yes	Yes
Com. port	RS485	RS485	RS485	RS485	RS485	RS485	RS485	RS485	FO	FO	RS485	RS485
Surge arrester	Yes	Yes	Yes	Yes	Yes	Yes	Yes	Yes	Yes	Yes	Yes	Yes
Antitheft channels	No	No	No	No	2	2	2	2	2	2	3	3
Block diode	No	No	No	No	No	No	Yes	Yes	No	No	No	No
Switch-board size	A	A	A	A	A	A	B	B	A	A	B	B

CARLO GAVAZZI
Automation Components







Wind Energy

EcoEnergy
equipment



Presentation 2
Solar Energy 4
Wind Energy **32**
Wind Turbine
WT3 **36**
Wind Management Cabinets
WTC 3 / WTB 3 **38**
Grid Tied Wind Turbine Inverter
WTI 3 **40**
Wind Battery Charger and Cabinet
WT SBC2 / WTC 3BC **42**
Pure Sinusoidal Inverter
PSI **44**
Complementary 46

Aeolic energy is the result of the conversion of the kinetic energy of the wind into other forms of energy, either electrical or mechanical. Nowadays, it is mostly converted into electrical energy by means of wind turbines. Aside from pumps for irrigation or drainage, windmills were mostly used to grind grain. Thus, we still speak of "windmills" today, even when we are talking about machines that do not actually grind, such as sawmills and hammer mills.

Today, wind generation is the fastest growing energy production source in the world, with a total power of over 158 GW installed by the end of 2009, and over 38 GW of newly installed power in the same year (Source GWEC 2010 and WWEA 2010). All the wind turbines installed generate a total of 340 TWh, equivalent to the total energy demand of a country like Italy, and equalling 2% of global energy consumption. The capacity of wind power installed in the world has grown by 170% in just five years and it has become the primary source for new power generation installations, with a share of 39%.

In Europe in 2009, 10.5 GW were installed, of which 582 MW offshore, taking the total wind power capacity up to 76.2 GW.

The forecast is that in 2014 global wind capacity will stand at 409 GW, up from 158 GW at the end of 2009. By 2014, 62.5 GW of new capacity will be added to the global total, compared to 38 GW in 2009 (Source GWEC 2010). The outlook is that by 2020 wind generation will contribute at least 12% to global electricity consumption with 1500 GW produced globally (Source: WWEA 2008).





Wind Energy

Micro, mini and aeolic

Wind generating systems can be divided into 3 main power divisions: microaeolic below 20 kW, miniaeolic from 20 kW to 200 kW, and aeolic above 200 kW. Today the biggest generators can provide up to 7 MW and have rotors of 126 m in diameter. However 10 MW offshore generators are already under development.

Horizontal and vertical turbines

The global energy generated by the aeolic system is made by horizontal axis wind turbines (HAWT) but in microaeolic system, the turbines can also be of vertical axis type (VAWT). Carlo Gavazzi is concentrating its efforts on the HAWT both in the micro and mini aeolic systems.

Grid connected and off grid

Whilst the big aeolic generators are installed in aeolic parks, are connected to the public grid and become power stations for a certain area, micro and mini aeolic turbines are suitable for domestic, business, industrial and farm use, also in remote areas, and can be either grid-connected or off grid.

Hybrid systems

Off grid installations are commonly made in conjunction with other power sources and are defined as hybrid or combined. They can be combined with photovoltaic plants, hydro turbines or both. The energy produced is stored in batteries, which can be used to supply DC loads directly or converted into AC by a battery inverter and then used as AC mains. Such systems can be combined with a backup diesel generator that is started before the battery level reaches minimum survival levels.

Carlo Gavazzi turnkey systems

Carlo Gavazzi provides a hassle free microaeolic solution, with all the required devices for the installation integrated into specific cabinets, so that the installer can carry out as few operations as possible. All that remains to be done is the foundation for the wind turbine and the mechanical assembly.

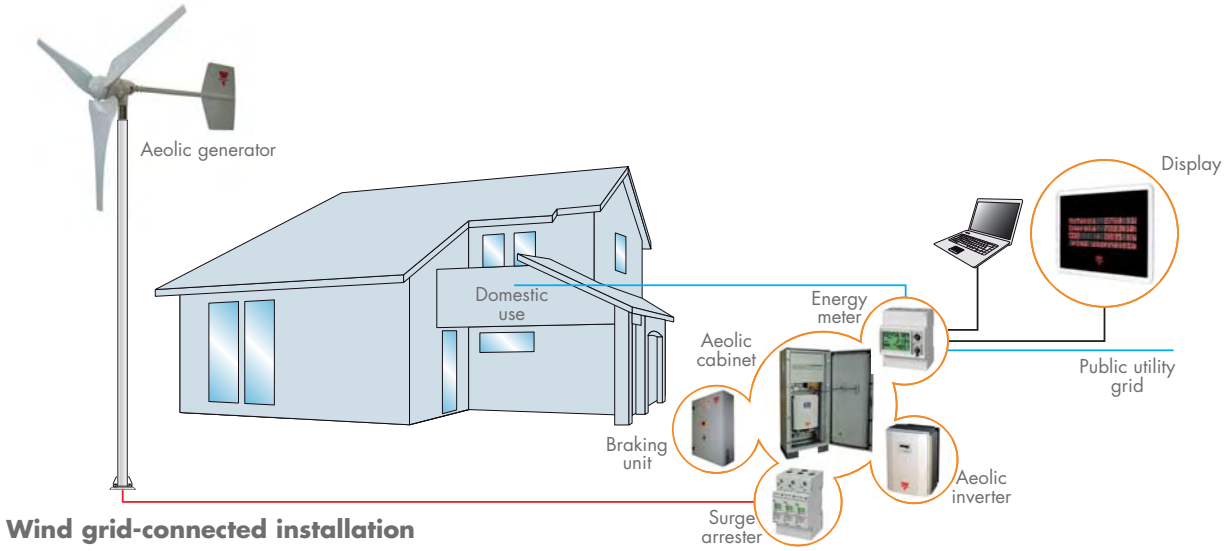

Wind grid-connected installation





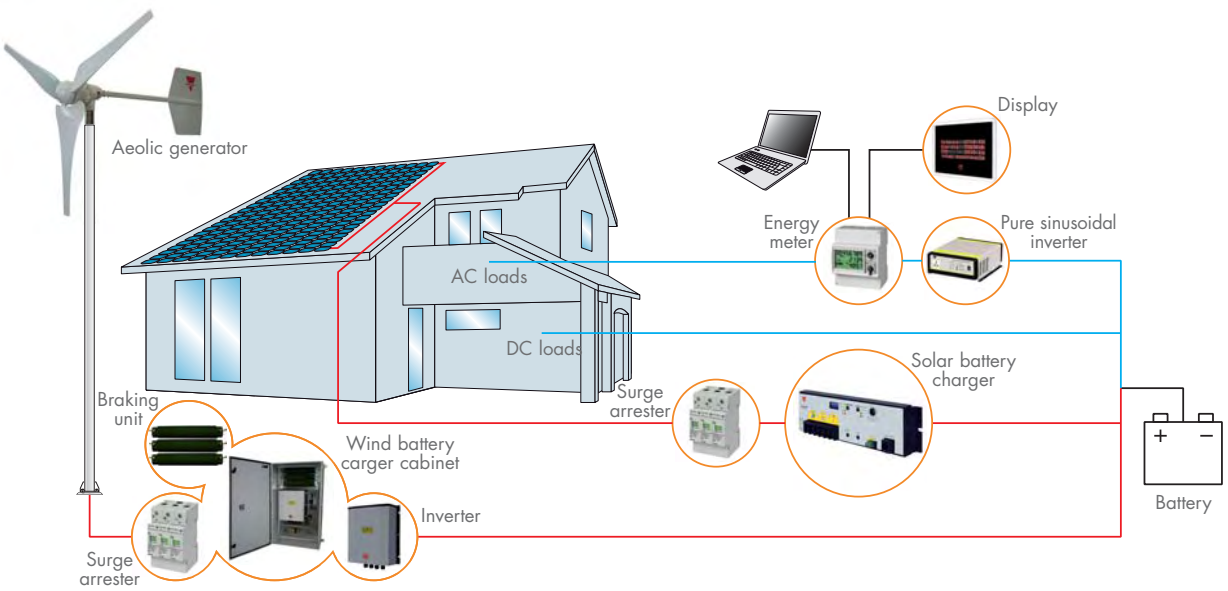

Hybrid off grid installation

WT 3
Mistral3K - Horizontal wind turbine

The Mistral3K micro wind turbine has been designed according to state-of-the-art technology for Horizontal Axis Wind Turbines (HAWT).
This turbine delivers high efficiency energy with a low level audible noise.
The main concept of this turbine is simplicity. There are as few components as possible for easy installation and commissioning, limiting weight and enhancing long term reliability.
The generator is directly mounted onto the propeller shaft, held in place by high performance ball bearings, without any gears or brakes. The blades have an exclusive profile with a fixed pitch which, together with a brand new generation of lightweight and resistant materials, provides high performance, very low inertia and limited mechanical losses. In the best conditions, this microturbine can have a total efficiency of up to 39%.



Electric power transmission between the moving parts and the fixed parts of the system is guaranteed by means of slip rings that allow total rotation of the wind turbine on the pole.



Harness power from the wind

• Gearless
No mechanical losses due to unnecessary additional reductions that typically have a limited efficiency.

• Generator
The generator is an 18-pole permanent magnet generator with 3 phase output from 50 to 240 VAC.

• 3 kW maximum output power
The maximum output power of the turbine is 3 kW at the maximum operating speed of 13.5m/s, although the rated output power is 2 kW measured at 11m/s according to the related norm IEC61400-2.

• Furling protection
The turbine is protected against strong winds by passive furling protection. When the wind speed reaches around 13 m/s the tail of the turbine furls, moving it transversally. The generator still rotates and generates energy, but much less. If the wind speed returns to below the limit, the tail goes back to a straight position, the turbine faces the wind direction again and normal operation is restored.

• Low cut-in speed
The turbine starts to rotate at 2.5m/s of wind speed. The power generation starts at 3m/s.

CARLO GAVAZZI Automation Components. Specifications are subject to change without notice. Illustrations are for example only.

General Data

Type	18 poles Permanent Magnet Generator
Rated output power	2.0 kW @ 11.0 m/s (Acc. to IEC61400-2)
Maximum output power	3.0 kW
Minimum voltage	50 Vrms @ 145 rpm
Maximum voltage	240 Vrms @ 780 rpm
Insulation Class	F

Mechanical Data

Propeller diameter	2.49 m
Sweep area	4.87 m^2
Overall weight Blades weight Tail weight Body+generator weight	53 kg 9.3 kg 9.6 kg 34 kg
Propeller blades	3
Propeller blades material	Composite carbon fibre
Stand material	Zinc-coated steel
Rotor blades protection	Anti-UV, chemical resistant, temperature resistant
Colour	RAL9010

Turbine Braking Control

Automatic system	1) Furling protection begins at 13.5m/s wind speed 2) Over speed electromagnetic brake using WTI3 inverter and WTB3 braking box
Manual	Short circuit braking and resistor braking using WTB3 braking box

Turbine Data

Type	HAWT Three Blades Propeller Turbine
Speed range	0 rpm to 800 rpm
Operating speed rotation	145 rpm to 780 rpm
Rated speed	690 rpm @ 12 m/s
Start-up wind speed	~2.5 m/s
Cut-in wind speed	3.0 m/s
"Furl Protection" wind speed	Start @ 13.5 m/s
Survival wind speed	≥50 m/s

Environmental Data

Ambient temperature	-20 to +50°C
Noise level	< 60dB (Acc. to IEC61400-11)
Humidity	0 to 95% RH
Corrosion protection	Protective paint
Protection degree	IP54

Standard Norms and Certifications

According to	IEC61400-2

Power Curve

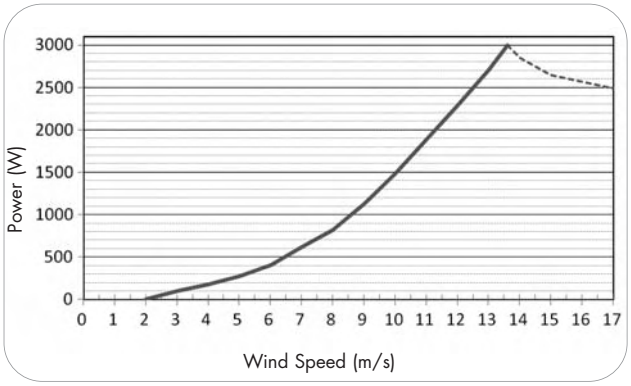

Dimensions (cm)

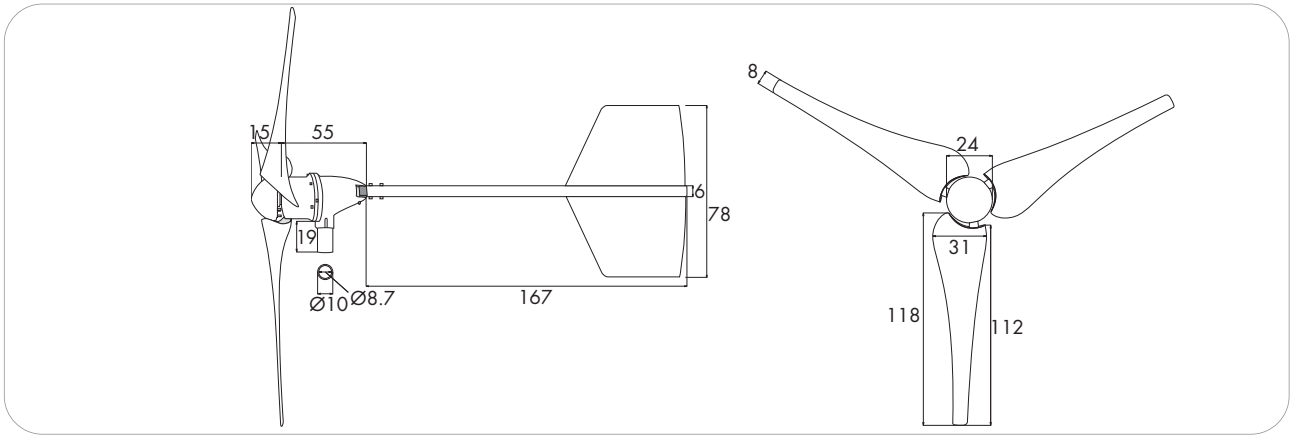

CARLO GAVAZZI Automation Components. Specifications are subject to change without notice. Illustrations are for example only.

WTB 3, WTC 3

Mistral3k management cabinets



WTB 3 and WTC 3 are products designed by Carlo Gavazzi for the Mistral3k wind turbine remote management. They both manage the wind generator braking functions. There are 2 modes: resistor braking and total stop.
The resistor braking slows down the turbine in strong wind conditions, the total stop blocks the turbine when the strong wind conditions become persistent.
The braking functions can be overridden by front panel switches when it is necessary to manually stop the wind generator.
The WTB 3 cabinet is merely a braking function cabinet, with the option of having surge protecting devices to increase product safety, whilst the WTC 3 is a complete in-grid solution. The single phase grid-connected inverter is integrated into the cabinet. With the WTC 3 cabinet all that is left to do for the wind system installation is the connection of the wind turbine and the grid to the cabinet terminals.
Both cabinets can be equipped with an energy meter in order to display, locally or on a remote device, the power produced, the energy, the voltages and the currents.





Rely on "plug-and-play" equipment

• Easy installation
WTB 3 has to be connected to an external device capable of managing the power produced by the wind turbine, either to feed the energy into the grid or to charge batteries. Apart from this, the connection to the turbine is simple and fast, with only four terminals.
WTC 3 provides the easiest system when the power provided by the wind generator needs to be fed into the grid. There are just 4 wires to be connected to the generator and 3 wires to the grid.

• Ready configured inverter
The inverter built into the WTC 3 cabinet is ready configured in order to perfectly match the Mistral3k wind turbine. There is no need for further tuning.
The inverter can be programmed according to different national DNO recommendations: VDE0126 or DK5940.

• Strong wind safe operation
The monitoring software detects dangerous wind conditions through the voltage generated by the turbine and activates the soft braking first. If wind conditions remain dangerous for several minutes, the turbine is totally stopped. Every 30 minutes the conditions are checked in order to restore normal operation when wind strength becomes safe.

• Energy monitoring
Both devices can be equipped with a Carlo Gavazzi EM24 energy meter. This unit is equipped with an LCD display for direct reading of produced power, energy to the grid, voltage, current, frequency, yield and saved CO_2.
The built-in RS485 line allows data reading by remote PCs with Carlo Gavazzi PowerSoft, or with Carlo Gavazzi DPY displays.
The EM24 outputs can be used to drive.

CARLO GAVAZZI Automation Components. Specifications are subject to change without notice. Illustrations are for example only.

WTB 3 & WTC 3 General Data

Automatic protection device	WTI3 Inverter driven
Manual protection device	1 Mushroom Push button 1 Maintained Push button

WTB 3 & WTC 3 Input Data

AC connection	3-phase
Voltage range	0 to 240 VAC
Operating voltage range	30 to 200 VAC
Max. current	18 A

WTB 3 Environmental Data

Operating temperature	-10 to +50°C
Storage temperature	-25 to +80°C
Cooling	Natural convection
Humidity	0 to 95% (non condensing)
Installation location	Outdoor/Indoor
Protection degree	IP65

WTC 3 Output Data

WT 3 AC connection	1-phase
Nominal power	3 kW
Max. power	3.3 kW
AC voltage	230 VAC ±5%
Frequency	50 Hz
Max. current	14 A
Interface protection	VDE / DK5

WTB 3 Mechanical Data

Dimensions (HxWxD)	70x40x20 cm
Weight	20.0 kg

WTC 3 Environmental Data

Operating temperature	-10 to +40°C
Storage temperature	-25 to +80°C
Cooling	Forced ventilation
Humidity	0 to 95% (non condensing)
Installation location	Outdoor/Indoor
Protection degree	IP65

WTC 3 Mechanical Data

Dimensions (HxWxD)	140x60x45 mm
Weight	140.0 kg

WTB 3 & WTC 3 Block diagram

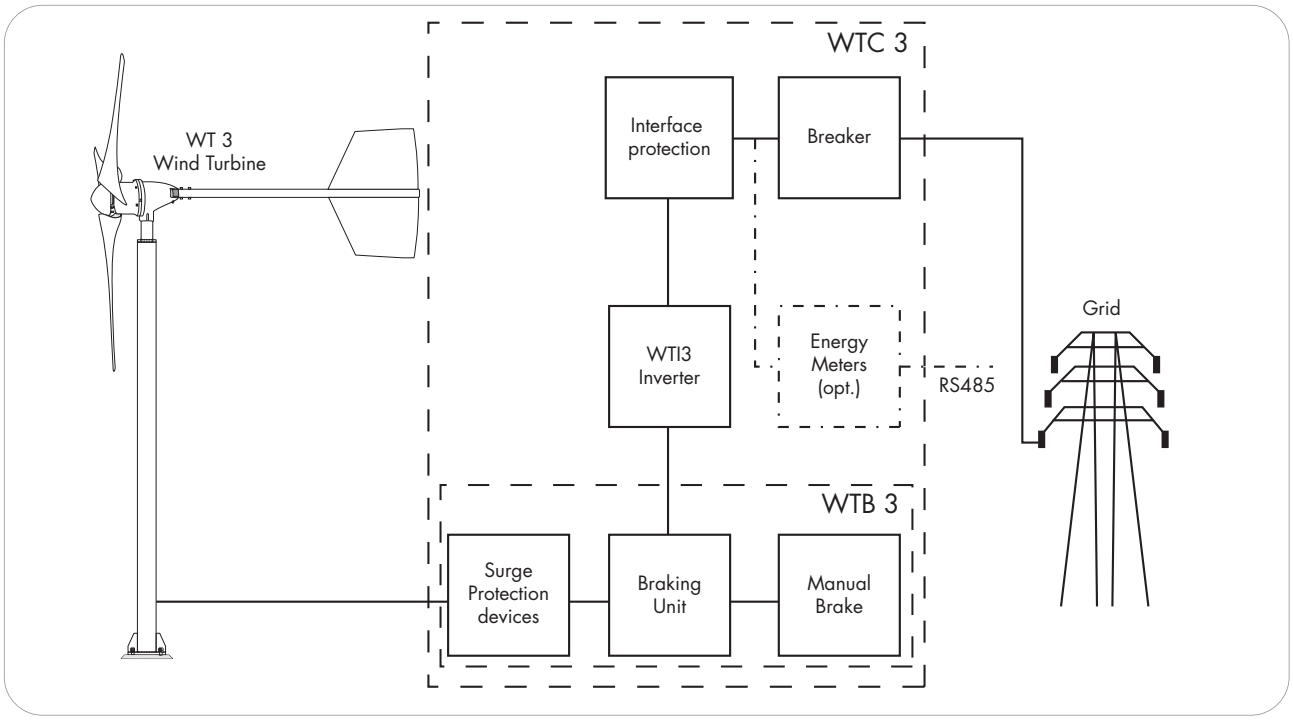

CARLO GAVAZZI Automation Components. Specifications are subject to change without notice. Illustrations are for example only.

WTI 3
Grid tied 3 kW wind turbine inverter



Despite the fact that the WTI 3 is a Carlo Gavazzi wind turbine inverter specifically developed for the Carlo Gavazzi Mistral3K turbine, it can also be configured to operate in conjunction with other manufacturers' turbines up to 3.6 kW.
The unit has DSP full digital control and the purpose of it is to convert the electric power generated by the wind turbines into energy to be fed into the utility grid.
The WTI 3 conversion efficiency is the highest possible since its algorithm has been tuned in order to perfectly match the output power curve of the Mistral3K turbine.
The safety of the utility grid connection is guaranteed by the interface protection which continuously monitors the parameters and, in case of deviation from correct parameters, disconnects the inverter until the correct values are restored. When the grid is inactive, when under service by the DNO, connection is opened by the anti-islanding protection.
The WTI 3 also provides the command for turbine braking when the wind speed becomes dangerous for turbine survival.
The integrated operator interface allows the programming of the main parameters and the monitoring of production values.



Maximize wind energy production

• MPP wind power tracking
The MPP tracking circuit of this Inverter has been especially tailored to the Carlo Gavazzi WT 3 turbine in order to provide optimum yield with the complete solution provided by Carlo Gavazzi, with maximum efficiency up to 95%.

• High wind protection
When strong and persistent winds are detected by the inverter by analysing the output power curve of the turbine, specific relay outputs are driven in order to activate the electromagnetic protections. One relay drives soft braking resistors that will slow down the turbine. If the strong wind situation persists, a second relay activates the hard braking in order to stop the turbine. The situation is checked again every 30 minutes until normal operation is restored. Carlo Gavazzi also offers the WTC 3, a cabinet that integrates the WTI 3 inverter and all the devices in order to manage the turbine, providing hassle free installation.

• Transformerless with RCMU
These devices are transformerless but equipped with an RCMU circuit in order to monitor and limit the DC current injection on the grid.

• Operator interface
The Inverter has an integrated LCD display with a 3 key pad in order to check the internal data, status and the production parameters. The data that can be displayed is: Input power (kW), input voltage (VDC on the internal Bus), input current (A), output power (kW), output voltage (VAC), output current (A), output power (kW).

CARLO GAVAZZI Automation Components. Specifications are subject to change without notice. Illustrations are for example only.

Output Data

AC connection	1-phase
Rated power	3 kW
Rated AC voltage	230 VAC ±5%
Rated frequency	50 Hz
Max. current	14 A
Power factor	>0.99 @ full load
Distortion factor THD	<3%
Max. efficiency	>95%

Environmental Data

Operating temperature	-20…+40°C
Cooling	Natural convection
Installation location	Indoor
Protection degree	IP43

Standard norms and Certifications

UNI-EN Standard	EN50178, EN50438
Interface recommendations	VDE0126-1-1 and G83-1
Certifications	CE: MD, LVD and EMC

Input Data

AC connection	3-phase
Voltage range	30…300 VAC
Operating voltage range	50…250 VAC
Max. current	18 A

General Data

Protection device	Grid monitoring system
Anti-islanding monitoring	Yes

Mechanical Data

User interface	LCD data display
Dimensions	535x360x200mm
Weight	18Kg

Power Curve

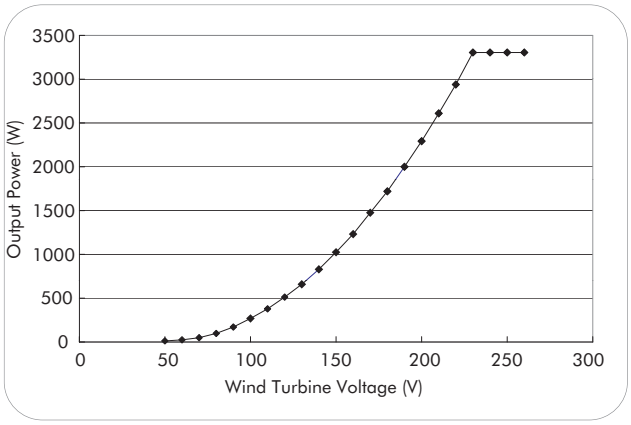

Efficiency Curve

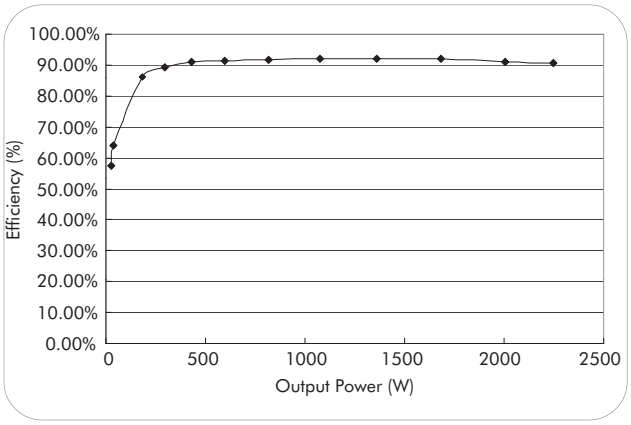

CARLO GAVAZZI Automation Components. Specifications are subject to change without notice. Illustrations are for example only.

WT SBC2, WTC 3BC

Wind battery charging

The WT SBC2 48 and WTC3 BC are products designed by Carlo Gavazzi for battery charging from wind energy. Inside the WTC3 BC cabinet are all the devices, including the WT SBC2 48 wind battery charger unit, that are normally required in order to convert the wind turbine energy into battery charging, manage the wind turbine and protecting it against harsh wind conditions. It is also IP65 and can thus be installed outdoors with specific protections.

The WT SBC2 battery charger, available also as a standalone unit, allows charge up to 2.4 kW, using a microcontroller for digital accuracy and full automatic operation. The input section of this battery charger is very similar to the wind turbine inverter, with an MPP tracker, designed in order to achieve the best ratio between voltage and current according to the actual turbine performance. The power curve of the Carlo Gavazzi Mistral3k is already stored in the battery charger providing the highest output in any wind condition. The charger provides two relay outputs in order to manage the "soft" and "hard" braking of the wind turbine when wind conditions become extreme and could compromise the wind turbine survival. If the battery charger is integrated into Carlo Gavazzi WTC3 BC the braking function is managed internally in the cabinet and does not require any external device.



Convert wind power into electricity

• High charging power

The WT SBC2 48, and consequently the WTC3 BC, battery charger is a very high power charger, up to 2.4 kW. The battery charging current can be set, by the user, up to 50 A. The only available battery voltage is 48 V in order to comply with European low voltage directives.

• Battery protection

If the battery charge level is above the float level "soft" braking is activated so that the turbine will slow down and limit charging current.

In case of battery overcharge, the charging will shut down and switch to "float" for 10', then go back to charging for 1'. This behaviour prevents battery life being shortened and early failures.

• Input overvoltage protection

The battery charging unit, WT SBC2, is equipped with input over voltage protection that prevents high voltage transients getting into the unit. Besides this, in order to increase the overall safety of the system, the cabinet could be equipped, upon request, with built in surge protecting devices.

• High wind protection

When the wind conditions become severe, for the turbine survival, "soft" braking is actuated, by inserting resistors in parallel to the turbine: this action will increase the mechanical resistance of the generator and slow down the rotation.

If the high wind conditions become persistent "hard" braking is actuated by shorting the wind turbine terminals and consequently stopping the rotation of the blades.

Wind conditions are tested every 30 minutes and if safe wind speed is verified the brakes are released and normal operation is restored.

CARLO GAVAZZI Automation Components. Specifications are subject to change without notice. Illustrations are for example only.

Technical Data

Max. output power	3200 W
Rated output power	3000 W
Input voltage range (line voltage)	50~200 Vrms
Rated input current	20 A
Max. charger efficiency	>90%
MPPT efficiency	>95%
Stand-by power	<5 W
Recommended 48 V rechargeable batteries	200AH/350AH/500AH/ 600AH
Battery low protection voltage	44 VDC ±1 V
Float voltage	58 V ±1 V, 1min charging per 10 min

Max. charge current	adjustable
Working temperature	
WT SBC2 48	-10°C to +40°C
WTC 3BC	-40°C to +40°C
Installation location	
WT SBC2 48	Indoor
WTC 3BC	Outdoor/Indoor
Degree of protection	
WT SBC2 48	IP43
WTC 3BC	IP54
Weight Kg/Lb	
WT SBC2 48	15 kg/33.01lb
WTC 3BC	60 kg/132.28 lb

WT SBC2 48 - Dimensions

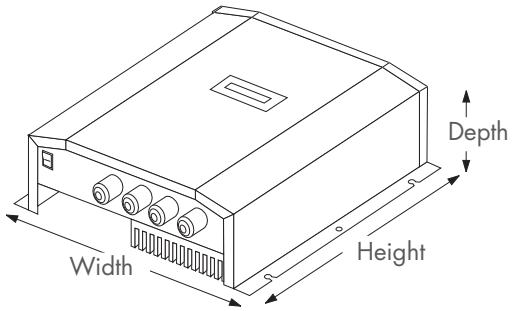

H x W x D mm/inches	400x325x130 / 15.75x12.79x5.12"

WTC 3BC - Dimensions

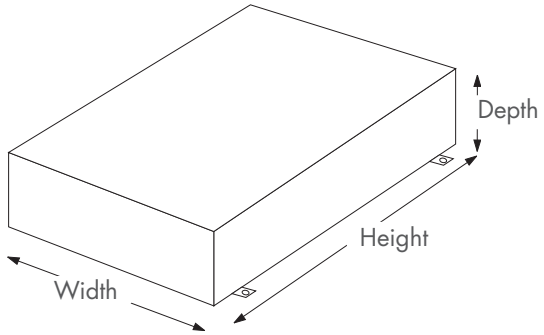

H x W x D mm/inches	1000x600x300 / 39.37x23.62x11.81"

CARLO GAVAZZI Automation Components. Specifications are subject to change without notice. Illustrations are for example only.

PSI
Pure sinusoidal inverter

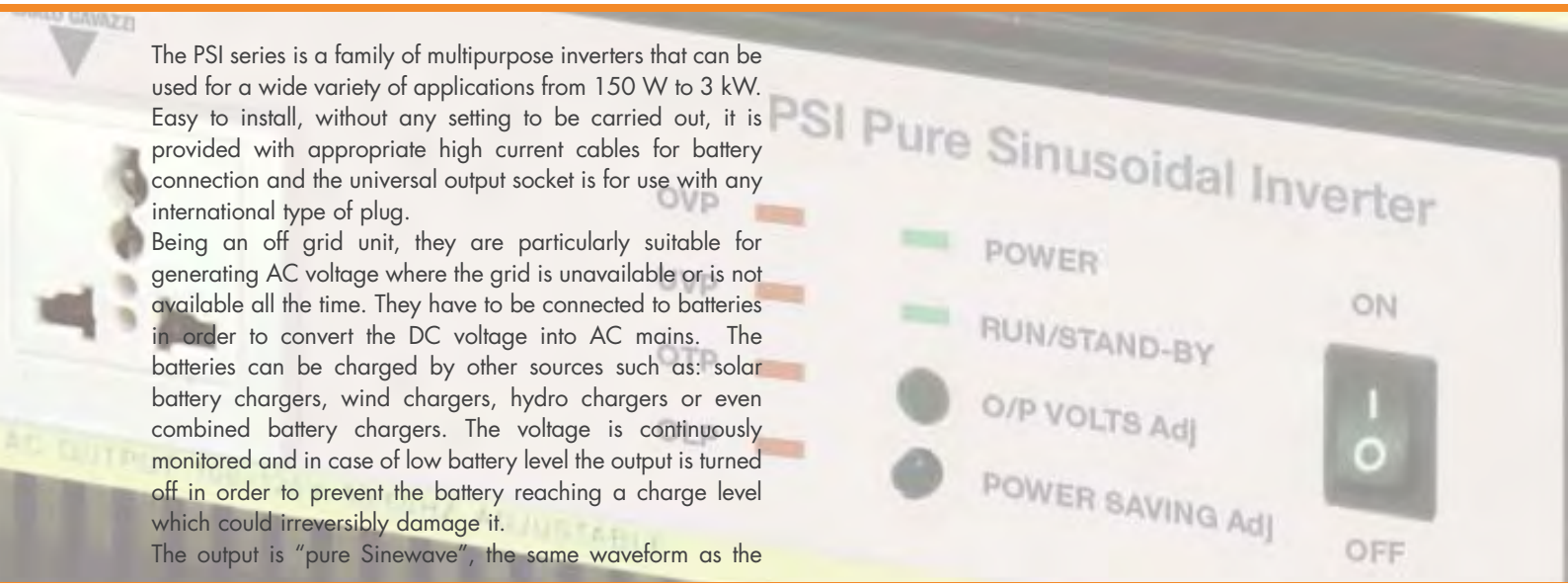

The PSI series is a family of multipurpose inverters that can be used for a wide variety of applications from 150 W to 3 kW. Easy to install, without any setting to be carried out, it is provided with appropriate high current cables for battery connection and the universal output socket is for use with any international type of plug.
Being an off grid unit, they are particularly suitable for generating AC voltage where the grid is unavailable or is not available all the time. They have to be connected to batteries in order to convert the DC voltage into AC mains. The batteries can be charged by other sources such as: solar battery chargers, wind chargers, hydro chargers or even combined battery chargers. The voltage is continuously monitored and in case of low battery level the output is turned off in order to prevent the battery reaching a charge level which could irreversibly damage it.
The output is "pure Sinewave", the same waveform as the grid and it could be used in order to supply any type of AC load, even those sensitive to mains distortion. The DC input and AC output are also galvanically insulated by a low frequency transformer which, besides avoiding dangerous connections between input and output, also prevents any DC voltage injection into the mains.



Use multipurpose inverter for all AC loads

• Wide selection
Output power can be selected among models from 150 W to 3 kW with 2 output voltages, 110 VAC at 60 Hz and 230 VAC at 50 Hz; the output socket is the universal type: they are suitable for almost any country in the world and any domestic and low power application.
The battery voltage is also selectable from the 3 main voltages: 12 V, 24 V or 48 V.

• Low power consumption
PSI inverters need very little power to be kept alive when they are in sleep mode: 5 W on 150 W and 300 W models, and only 4 W on models up to 3 kW. The PSI inverters remain in sleep mode until the load is disconnected. The start-up power can be adjusted according to the load requirements.

• Protection
In order to protect the unit itself, PSIs feature over-temperature, overvoltage, reverse input polarity with fuse, overload and shortcircuit protection. The battery is also protected by preventing operation when the battery is too low: if this occurs the operation is restored once the battery voltage returns to a specified level.

• Universal output
The output voltage can be selected from 110 VDC/60 Hz or 230 VAC/50hz. The output socket is universal: UK, Schuko, Europe, US, China, Japan, Australia, etc…

Product to be released soon

CARLO GAVAZZI Automation Components. Specifications are subject to change without notice. Illustrations are for example only.

Electrical Data

Models	PSI 0150 12 PSI 0150 24 PSI 0150 48	PSI 0300 12 PSI 0300 24 PSI 0300 48	PSI 0600 12 PSI 0600 24 PSI 0600 48	PSI 1000 12 PSI 1000 24 PSI 1000 48	PSI 1500 12 PSI 1500 24 PSI 1500 48	PSI 3000 12 PSI 3000 24 PSI 3000 48
Continous output power at rated temperature	150 W	300 W	600 W	1000 W	1500 W	3000 W
Output power surge (for 5s)	250 W	450 W	900 W	1500 W	2000 W	4000 W
AC output voltage	100~120 V ±2% - 200~240 V ±2% adjustable					
Output voltage regulation	-4%~+4%		-1.5%~+1.5% all models			
Output frequency	60 Hz ±0.5% / 50 Hz ±0.5%					
Output wave form	Pure sine wave <4%THD		Pure sine wave <2%THD			
Efficiency (full load)	88%	89%	88%	87%	88%	87%
Sleep mode (with load) power consumption	<5 W		<4 W (in power saving status)			
Input voltage range	10~16 VDC / 20~32 VDC / 38~64 VDC					
Auto load detector	<10 W in stand-by mode; >10 W working mode					
Disconnection	≤10.5 VDC					
Reconnection	≥12 VDC					
Anti-surge protection	Disconnection if DC input voltage is 16 VDC					
Protection feature	Over / under input voltage, over temperature and reverse input polarity (fuse). Over load, short circuit, shutdown, restart.					

General Data

Models	PSI 0150 12 PSI 0150 24 PSI 0150 48	PSI 0300 12 PSI 0300 24 PSI 0300 48	PSI 0600 12 PSI 0600 24 PSI 0600 48	PSI 1000 12 PSI 1000 24 PSI 1000 48	PSI 1500 12 PSI 1500 24 PSI 1500 48	PSI 3000 12 PSI 3000 24 PSI 3000 48
Power saving recovery time	N/A		1 second			
LED status indication	RUN, TRIP, LED All-in-one.		Power ON/OFF, RUN/STAND-BY, High/Low battery shutdown, Over temperature shutdown and Over load shutdown.			
Remote controller	N/A		Power output ON/OFF, RUN, TRIP LED All-in-one			
Operation temperature range	-20° to +50°C / -4° to +122°F					
Storage temperature range	-30° to +70°C / -22° to +158°F					
Protection degree	IP20					

Dimensions

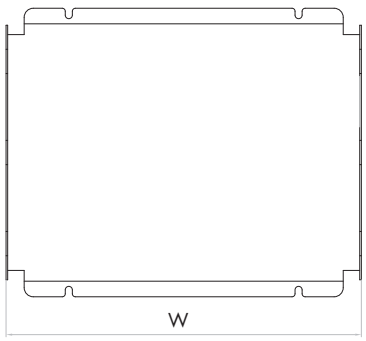

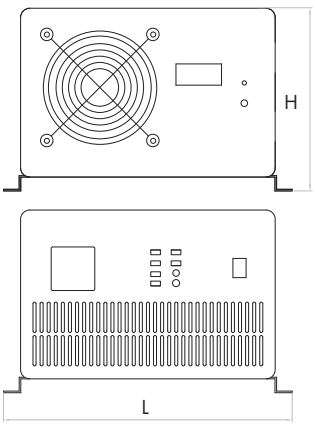

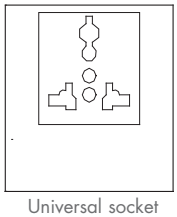
Universal socket

Models	PSI 0150 12 PSI 0150 24 PSI 0150 48	PSI 0300 12 PSI 0300 24 PSI 0300 48	PSI 0600 12 PSI 0600 24 PSI 0600 48	PSI 1000 12 PSI 1000 24 PSI 1000 48	PSI 1500 12 PSI 1500 24 PSI 1500 48	PSI 3000 12 PSI 3000 24 PSI 3000 48
Dimensions (LxWxH) mm	220x130x90	240x285x120	350x285x120	450x285x120	380x285x185	510x285x185

CARLO GAVAZZI Automation Components. Specifications are subject to change without notice. Illustrations are for example only.

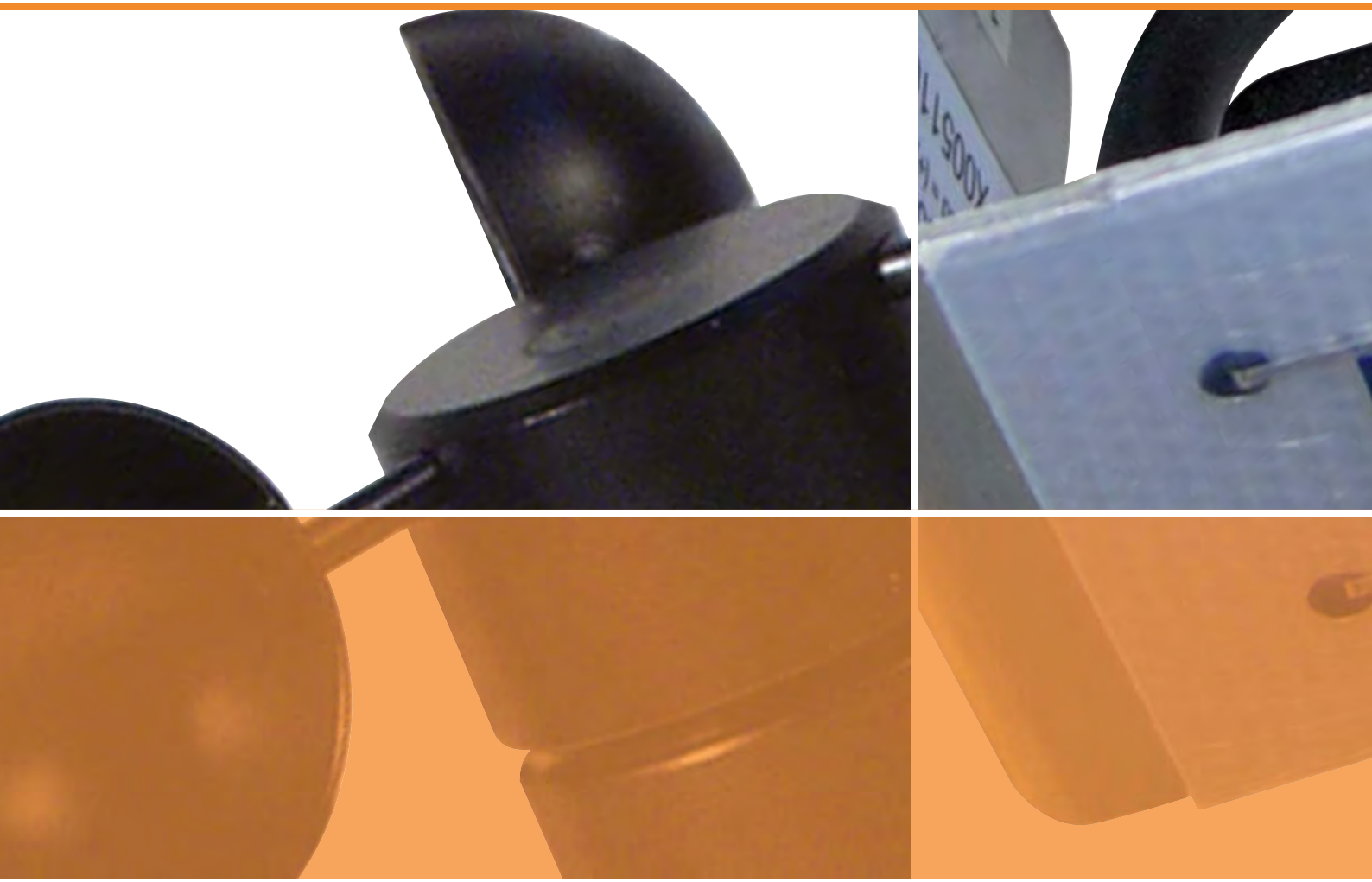

Complementary

EcoEnergy
equipment

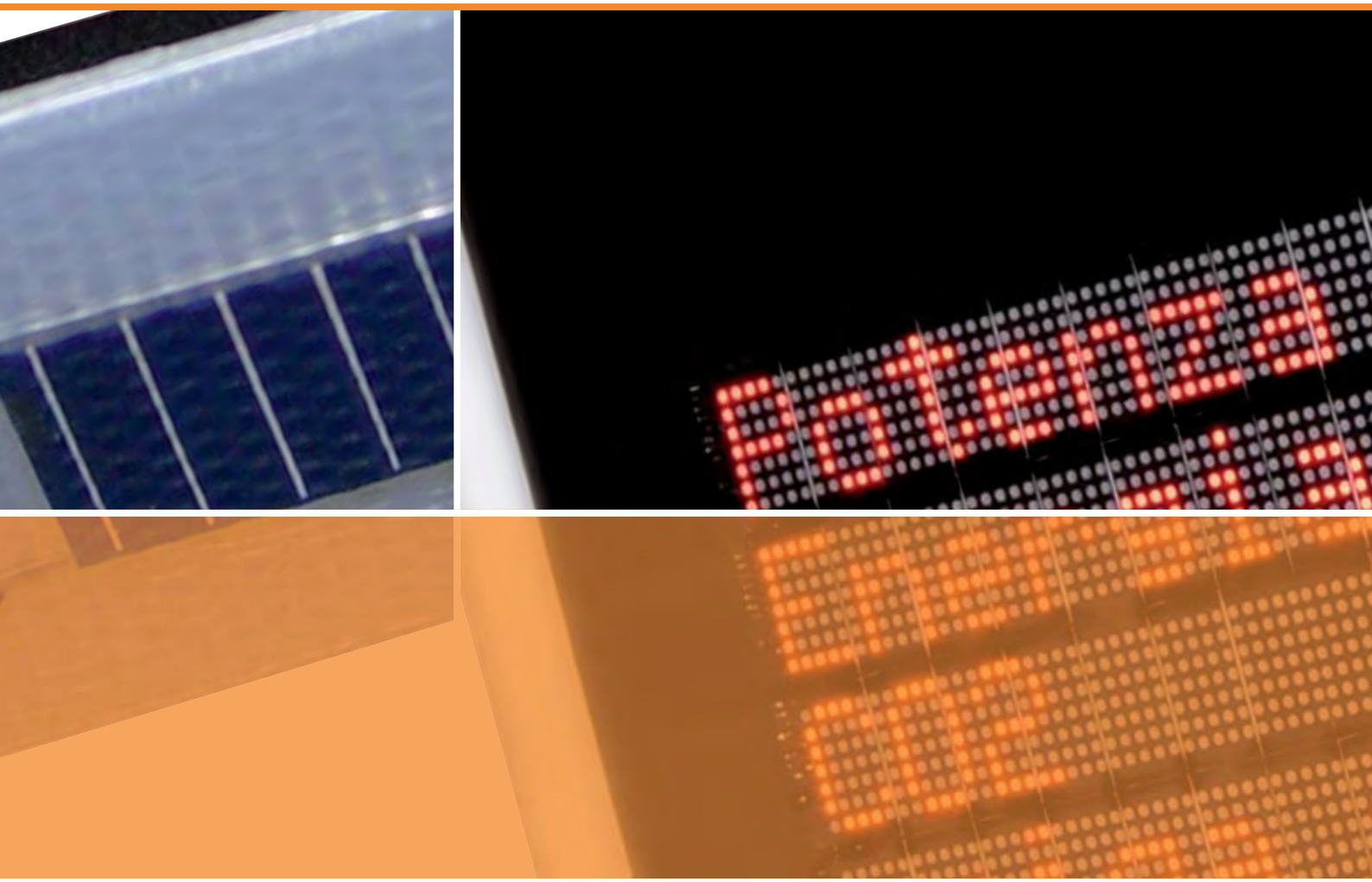

Presentation 2
Solar Energy 4
Wind Energy 32
Complementary **46**
Energy Meters
EM **48**
Interface Protection
DPC72 **52**
Surge Arresters
DSA **56**
Digital Display
DPY **58**
Environmental sensors
TEMPSOL **60**
IKE20001K **60**
CELLSOL **60**
Wind Vanes & Anemometers
DWS-D **62**
DWS-V **62**

EM Energy meters

The metering of the produced energy (provided to the grid or locally consumed) is of fundamental importance in any renewable energy generation system, first of all because the economic incentives strictly depend on the measured value. Carlo Gavazzi is able to supply a complete range of energy meters and analyzers that perfectly fit the different application needs. All these meters can be supplied with MID certification (Annex D). As a result of Carlo Gavazzi innovation, the EM-series features a number of benefits both for the installers and the end-user: a wide and bright display, compact size, easy connection and easy programming, also by means of dedicated software.
Accuracy, reliability, MID certification, application analysis and style are the key words behind the success of the Carlo Gavazzi EM-series.





Meter the power fed into the grid

EM24, EM26

• Tamper proof and revenue approval for billing purpose. Tamper proof capability using proper covers, thus protecting all input/output screw terminals. Lockable programming access using a password and a seal on the front selector.
• Easy variable scrolling, by means of the front joystick. Time saving installation system using self-power supply and automatic phase detection.
• Direct variable page access by means of the front four position selectors programmable by the user.
• Application orientated programming structure. Selection of eight different applications: Basic domestic - Shopping malls - Advanced domestic - Multi domestic (also camping and marinas) - Solar - Industrial - Advanced industrial - Advanced industrial for power generation, providing only the required programming parameters and the display variables, thus simplifying the installation and the display readout.
• 65 A direct connection available (EM24 AV9/2 only). Connections for cables with cross-section area from 6 to 35mm^2 instead of by-passing types assuring a "contactor type" wiring and connection protection.
• Programming software tools allowing the user to configure the instruments using the PC and the RS485, the RS232 or ports, making the programming job easier and faster.

EM11

• Power analyzer features in an ultra compact energy meter. New solution providing full parameter control, also saving space in the small switch panels. Relay output to switch OFF a non priority load, thus preventing a line overload condition.

EM21 72D

• One product, 3 different installation modes. Detachable display to carry out up to 3 installation modes from the same instrument: DIN-rail, panel mounting or transducer.
• Time saving installation system exploiting self-power supply, automatic phase detection and application oriented programming procedure.

CARLO GAVAZZI Automation Components. Specifications are subject to change without notice. Illustrations are for example only.

EM10 - EM11

Description and measurement	EM10: 1-phase energy meter (kWh) EM11: 1-phase energy analyzer V_{LN}, A, Hz, W, W_{dmd}, var, PF, kWh, kvarh. TRMS method
Input Specifications	
Range code	120 VAC 230 VAC Ib: 5 A, Imax: 32AAC
Accuracy	EM11: ±0.5% RDG (V, A)
Active energy	Class 1 (EN62053-21)
Reactive energy	(EN50470-3) Class 2 (EN62053-23) (EM11 only)
Display	4 DGT (inst. variables, EM11 only) 5+1 DGT (energies), LCD
Output Specifications	
Out 1 (Pulse)	1-open collector
Out 1 (Alarm)	1-relay (EM11 only)
General Specifications	
Power supply	Self power supply
Approvals/Marks	CE, MID certification

EM10 - EM11 - Dimensions (mm)

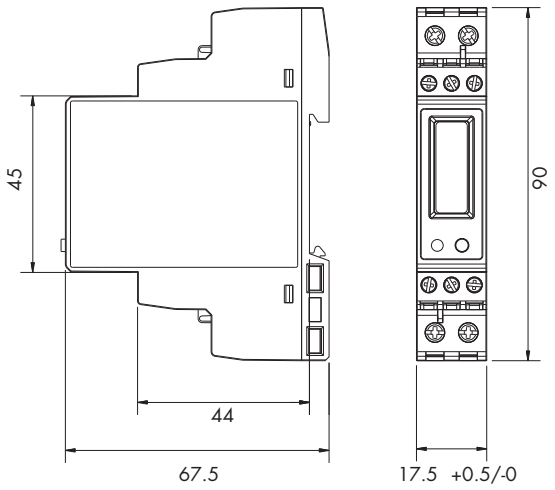

EM21 72D

Description and measurement	3-phase energy analyzer with dual mounting capability: panel and DIN rail. W, var, PF, Phase-sequence, V_{LL}, V_{LN}, A TRMS method
Input Specifications	
Range code	120/230 VAC, 400 VAC In: 5 A; Imax: 6 A
Active energy	Class 1 (EN62053-21)
Reactive energy	Class B (EN50470-3) Class 2 (EN62053-23)
Display	3 DGT (inst. variables) 6+1 DGT (energies), LCD
Output Specifications	
Out 1 (Pulse)	1 static opto-mosfet
Out 2 (Serial port)	RS485 (2-wire, Modbus) M-BUS by means of VMU-B
General Specifications	
Power supply	Self power supply
Approvals/Marks	CE

EM21 72D - Dimensions (mm)

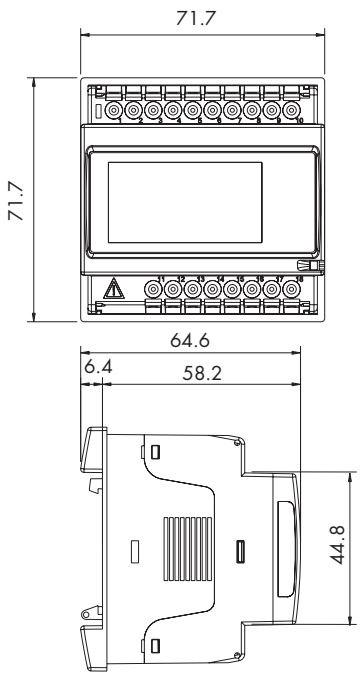

CARLO GAVAZZI Automation Components. Specifications are subject to change without notice. Illustrations are for example only.

EM23 DIN

Description and measurement	3-phase energy analyzer W, var, A, kWh, kvarh TRMS method
Input Specifications	
Range code	400 VLLAC Ib: 10 A; Imax 65 A
Active energy	Class 1 (EN62053-21)
Reactive energy	Class B (EN50470-3) Class 2 (EN62053-23)
Display	3x3 DGT (inst. variables) 6+1 DGT (energies), LCD
Output Specifications	
Out 1 (Pulse)	1 static collector
General Specifications	
Power supply	Self power supply
Approvals/Marks	CE, MID certification

EM23 DIN - Dimensions (mm)

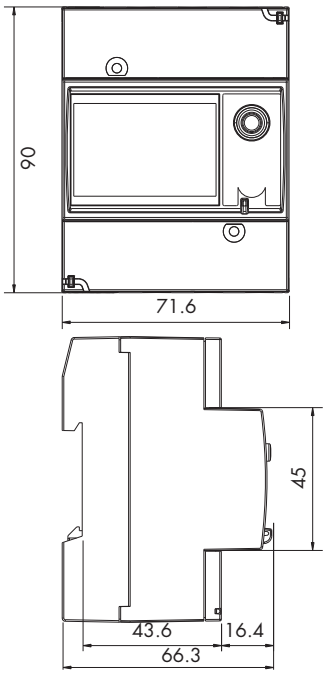

EM24 DIN

Description and measurement	3-phase energy analyzer Sys: V_{LL}, V_{LN}, var, VA, W_{dmd}, W, VA_{dmd}, Hz, kWh, kvarh, hour counter, gas and water Max: A_{dmd}, W_{dmd}, VA_{dmd}. Single-phase: V_{LL}, V_{LN}, A, W, var, VA, PF, A_{dmd}, kWh, kvarh. TRMS method
Input Specifications	
Range code	120/208 V_{LL}; 400 V_{LL} In: 1/5 A, Imax: 10AAC. 120/208 V_{LL}, 230 V_{LL}, 400 V_{LL} Ib: 10 A, Imax: 64AAC
Accuracy	±0.5% RDG (V, A)
Active energy	Class 1 (EN62053-21)
Reactive energy	Class B (EN50470-3) Class 2 (EN62053-23)
Display	3x4 DGT (inst. variables) 8 DGT (energies), LCD
Output Specifications	
Out 1 (Pulse)	2 open collector/relay
Out 1 (Alarm)	2 open collector/relay
Out 2 (Serial port)	RS485 (2-wire) M-BUS by means of VMU-B
Inputs	3 digital inputs
General Specifications	
Power supply	Self power supply Auxiliary power supply: 18 to 60 VAC/DC, 115/230 VAC
Approvals/Marks	CE, MID certification

EM24 DIN - Dimensions (mm)

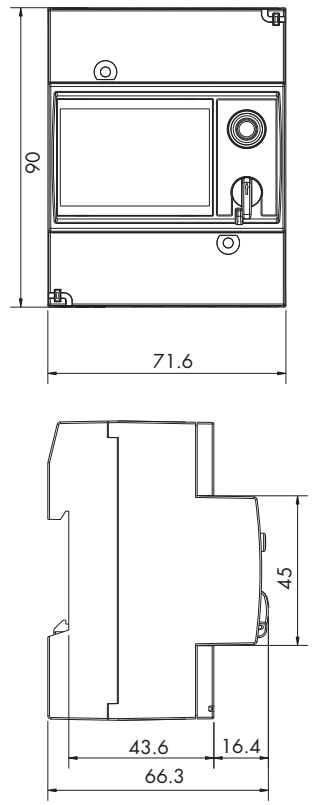

CARLO GAVAZZI Automation Components. Specifications are subject to change without notice. Illustrations are for example only.

EM26 96

Description and measurement	3-phase energy analyzer Sys: V_{LL}, V_{LN}, An, var, VA, W, W_{dmd}, VA_{dmd}, VA, Hz, %THD-V, %THD-A, kWh, kvarh, hour counter, gas and water Max: A_{dmd}, W_{dmd}, VA_{dmd}. Single-phase: V_{LL}, V_{LN}, A, W, var, VA, PF, A_{dmd}, kWh, kvarh. TRMS method
Input Specifications	
Range code	120/208 V_{LL}; 400 V/600 V_{LL} In: 1/5 A, Imax: 10AAC
Accuracy	±0.5% RDG (V, A)
Active energy	Class 1 (EN 62053-21)
Reactive energy	Class 2 (EN 62053-23)
Display	3x4 DGT (inst. variables) 8 DGT (energies), LCD
Output Specifications	
Serial communication port	RS485 (2-wire)
Alarm port	2-relay/open collector
Pulse output	3-open collector/relay
Digital input	3 digital inputs
General Specifications	
Power supply	18 to 60 VAC/DC, 90/260 VAC/DC
Approvals/Marks	CE, cULus (only 90/260 V version)

EM26 96 - Dimensions (mm)

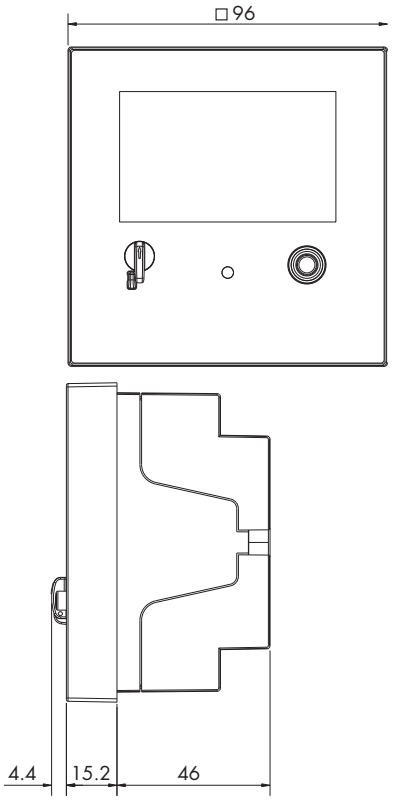

Functions and Features

	EM10 DIN	EM11 DIN	EM21 72D	EM23 DIN	EM24 DIN	EM26 96
AC energy metering	Yes	Yes	Yes	Yes	Yes	Yes
Gas and water metering					Yes	Yes
Variables analysis		Yes	Yes		Yes	Yes
Power quality analysis						Yes
CT connections			Yes		Yes	Yes
Direct high-current connections	Yes	Yes		Yes	Yes	
Digital inputs					Yes	Yes
Pulse output	Yes	Yes	Yes	Yes	Yes	Yes
Alarm outputs		Yes			Yes	Yes
Serial communication			Yes		Yes	Yes
Dupline					Yes	

DPC72
Interface protection

When dealing with energy generators connected to the public grid, an interface protective device which monitors both voltage and frequency is required. It has to comply with National regulations or to specific ones defined by each single energy supplier.
If any fault occurs, DPC72, disconnects the generator from the grid, prevents the former from continuing to supply the mains and therefore immediately removes any dangers from both users and devices.
DPC72 B002 is the German version (certified by TÜV according to VDE0126-1-1) of the interface protection for the renewable energy market, which adds to the mandatory requirements other interesting and useful features like the LCD display, an event data logger and counter, and an RS485 communication port allowing the device to be easily programmed and the system to be real-time monitored.
The DPC72 B003 is certified according to the Italian ENEL DK5940.
Complete in a very compact housing (only 4-DIN modules wide) and with a simplified programming procedure, thanks to the display, the front joystick and the front selector or, as an alternative, by the DpcSoft dedicated software which is downloadable for free from our website.



Monitor electric parameters

• **Protection**
• Voltage, frequency, phase loss and sequence control with 50ms reaction time for an immediate disconnection of the power generator from the grid in case of fault.
• Tamper-proof features to avoid undesired modification of the programmed parameters.

• **Communication and data logger**
• RS485 communication port for transmission to PC of the status and the instantaneous and logged data.
• Event counter and data logger for off-line data analysis.
• Multifunction monitoring relay including display, communication port and datalogger in a very compact size (4 DIN modules) for space saving also in small cabinets.

CARLO GAVAZZI Automation Components. Specifications are subject to change without notice. Illustrations are for example only.

DPC72 B002 - Input Data

Nominal voltage	400 VAC L-L, 230 VAC L-N
Voltage setpoints	
Lower setpoint	
Range	320 to 400 VAC L-L 185 to 230 VAC L-N
Step adjustment	1 VAC
Preset value	320 VAC L-L, 185 VAC L-N
Upper setpoints	
Range	400 to 480 VAC L-L 230 to 277 VAC L-N
Step adjustment	1 VAC
Preset value	460 VAC L-L, 265 VAC L-N
Hysteresis	12 V
Voltage quality setpoints	Floating average
Upper setpoints	
Range	440 to 460 VAC L-L 254 to 265 VAC L-N
Step adjustment	1 VAC
Preset value	440 VAC L-L, 254 VAC L-
Lower setpoint	None
Integration time	
Range	1 to 30 min
Step adjustment	1 min
Preset value	10 min
System frequency	50 Hz, 60 Hz
Frequency setpoints	
Lower setpoint	
Range	45 to 65Hz
Step adjustment	0.1Hz
Preset value	47.5 Hz
Upper setpoints	
Range	45 to 65 Hz
Step adjustment	0.1 Hz
Preset value	50.2 Hz
Hysteresis	0.1 Hz

Timings	
Power ON delay	
Range	1 to 6 s
Step adjustment	1 s
Preset value	1 s
Power ON connection time	30 s, fixed
Upper and lower voltage delay on alarm	0.05 s to1s
Upper and lower frequency delay on alarm	0.05 s to1s
Voltage quality	<0.05 s, fixed
Incorrect phase sequence or total phase loss	
Alarm ON delay	<50 ms ± 15 ms (if the monitoring is enabled)
Recovery time	
Upper/lower voltage and frequency	
Setpoints exceeding: <3 s	
Range	0 to 30 s
Step adjustment	1 s
Preset value	5 s
Setpoint exceeding: >3 s	
Range	0 to 180 s
Step adjustment	1 s
Preset value	30 s
Voltage quality	
Range	0 to 180 s
Step adjustment	1 s
Preset value	30 s

DPC72 B002 - General Data

Accuracy (Display + RS 485)	(@25°C ± 5°C, R.H. <60%, 45 to 65 Hz)
Voltage	± (0.5% RDG + 1DGT)
Frequency	± 0.01 Hz (45 to 65 Hz)
Temperature drift	<200ppm/°C
Insulation	
Input to relays output	4 kV (1.2/50 µs), ≥2k VAC (rms)
Input to RS485 port	4 kV (1.2/50 µs), ≥2k VAC (rms)
RS485 port to relays output	4 kV (1.2/50 µs), ≥2k VAC (rms)
Environment	(EN 60529)
Degree of protection	
Front	IP50
Screw terminals	IP20

Pollution degree	3
Operating temperature	
8 A output	-20 to +50°C, R.H. <95%
5 A output	-20 to +60°C, R.H. <95%
Storage temperature	-30 to +80°C, R.H. <95%
Weight	Approx. 300g
Approvals	VDE 0126-1-1
CE marking	Yes
LVD	Acc. to EN 61010-1
EMC	Electromagnetic compatibility
Immunity	Acc. to EN 61000-6-2
Emissions	Acc. to EN 61000-6-3

CARLO GAVAZZI Automation Components. Specifications are subject to change without notice. Illustrations are for example only.

DPC72 B003 - Input Data

Voltage range	380 VAC to 415 VAC
Voltage setpoints	
Lower setpoint	
Range	320 to 400 VAC
Step adjustment	1 VAC
Preset value	320 VAC
Upper setpoints	
Range	400 to 480 VAC
Step adjustment	1 VAC
Preset value	480 VAC
System frequency	50 Hz
Frequency setpoints	
Lower setpoints	
Range	48.5 to 49.8 Hz
Step adjustment	0.1 Hz
Preset value	49.7 Hz
Upper setpoint	
Range	50.0 to 51.5 Hz
Step adjustment	0.1 Hz
Preset value	50.3 Hz
Frequency derivative setpoints	
Range (absolute value)	01 to 1 Hz/s
Step adjustment	0.1 Hz/s
Preset value	monitoring not enabled
Hysteresis	
Voltage	20 VAC
Frequency	0.1 Hz
Derivative frequency	0.020 Hz

Timings	
Power ON delay (T0)	
Range	1 to 6 s
Step adjustment	1s
Preset value	1s
Upper (T1) and lower (T2) voltage delay on alarm	
Range	0.05 s to1s
Step adjustment	0.05 s
Preset value	0.05 s
Upper (T3) and lower (T4) voltage delay on alarm	
Range	0.05 s to1s
Step adjustment	0.05 s
Preset value	0.05 s
Derivative frequency delay on alarm (T5)	
Range	0.05 s to1s
Step adjustment	0.05 s
Preset value	0.05 s (if the monitoring is enabled)
Incorrect phase sequence or total phase loss	
Alarm ON delay	<50 ms ± 15 ms (if the monitoring is enabled, no other adjustment is allowed)

DPC72 B003 - General Data

Accuracy (Display + RS 485)	(@25°C ± 5°C, R.H. <60%, 45 to 65 Hz)
Voltage	± (0.5% RDG + 1DGT)
Frequency	± 0.01 Hz (45 to 65 Hz)
Temperature drift	<200ppm/°C
Insulation	
Input to relays output	4 kV (1.2/50 µs), ≥2k VAC (rms)
Input to RS485 port	4 kV (1.2/50 µs), ≥2k VAC (rms)
RS485 port to relays output	4 kV (1.2/50 µs), ≥2k VAC (rms)
Environment	(EN 60529)
Degree of protection	
Front	IP50
Screw terminals	IP20

Pollution degree	3
Operating temperature	
8 A output	-20 to +50°C, R.H. <95%
5 A output	-20 to +60°C, R.H. <95%
Storage temperature	-30 to +80°C, R.H. <95%
Weight	Approx. 300g
Approvals	ENEL DK5940
CE marking	Yes
LVD	Acc. to EN 61010-1
EMC	Electromagnetic compatibility
Immunity	Acc. to EN 61000-6-2
Emissions	Acc. to EN 61000-6-3

CARLO GAVAZZI Automation Components. Specifications are subject to change without notice. Illustrations are for example only.

DPC72 B002 & B003 - Output Data

Relay output		1 x DPDT N.E.
Terminals 11, 12, 13 / 8, 9, 10		Voltage/frequency related (both outputs release in case of phase loss or wrong phase)
Relay contact rating ($AgSnO_2$)		
Resistive loads	AC1	8 A @ 250 VAC
	DC12	5 A @ 24 VDC
Small inductive loads	AC15	2.5 A @ 250 VAC
	DC13	2.5 A @ 24 VDC
Relay mechanical life		≥ 30 x 10^6 operations
Relay electrical life		≥ 10^5 operations (@ 8 A, 250 V, cosϕ = 1)
Relay operational frequency		≤7200 operations/h
RS485		
Type		Multidrop, bidirectional (static and dynamic variables)
Connections		2-wire (terminals 31, 32, 33)
Addresses		255, selectable
Protocol		MODBUS/JBUS (RTU)
Data (bidirectional)		
Dynamic		Reading only
Static		Reading/writing
Data format		1 start bit, 8 data bit, 1 parity bit (even, odd or none (default) control), 1 stop bit
Speed		9600 (default) or 4800 bit/s, selectable
Driver input impedance		1/5 unit load, max. 160 devices on the same bus

DPC72 B002 & B003 - Supply Data

Power supply	Overvoltage cat. III
Rated operational voltage through terminals:	(IEC 60664, IEC 60038) 55, 53, 51
Delta Voltage	380 to 415 VAC ± 15% 45 to 65 Hz
Rated operational power	8 VA Supplied by L2 and L3

DPC72 B002 & B003 - Dimensions (mm)

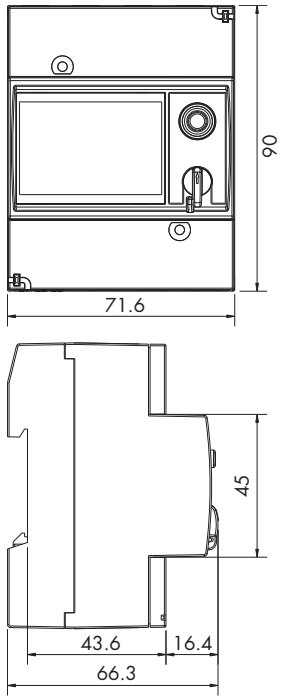

CARLO GAVAZZI Automation Components. Specifications are subject to change without notice. Illustrations are for example only.

DSA
Surge arresters

A photovoltaic installation is a long-term investment which needs to be protected from any possible damage from power surges. These surges could affect the AC side, connected to the public grid, or the DC side (from the panel to the string boxes, to the inverter), or the serial communication line which connects the inverter, the measurement and control instruments, the interface protection, and the acquisition system: the damage can be considerable, both in terms of faulty or destroyed devices and in terms of energy production stops, with the consequent money loss.
Voltage surges are peaks induced in the electrical grid because of either low-voltage system switchings or lightning. The former are due to load switching, load variation, switching of producing plants or transformers, and can reach 2 or 3 times the nominal voltage of the system. Inductive or galvanic coupling can give rise to a surge of more than 2 km around a lightning impact point, reaching up to 20 times the nominal voltage (indirect lightning). All this can cause immediate damage to any electrical device connected to the system where the surge took place, or long-term damage even if the surge values are not very high.



Protect plants from any damages

• DC and AC arrester:
Surge arresters for DIN rail mounting with removeable cartridges without the need for a tool, window status indication (green/red), and relevant free of voltage contact. Thanks to the contact, the exhausted removable cartridges can be replaced without leaving the installation unprotected.
Internal wiring and labelled terminals.
Easy installation and maintenance.

• Data line arrester:
Compact arrester for serial communication lines, suitable for any 2-wire bus system, with high lightning protection capability.
The protection of data lines, often omitted, allows complete protection of the inverter, avoiding damage to the control and acquisition data system.

CARLO GAVAZZI Automation Components. Specifications are subject to change without notice. Illustrations are for example only.

Surge Arresters Models

	Code	Uc DC / Uc AC	Description	Type (EN61643-11)	Remote Contact	Cartridge
DC Surge Arrester DSA_D	**DSA52CD585**	585 VDC	2-pole	2	Yes	2 x DS0440
	DSA53CD585	585 VDC	3-pole (∅)	2	Yes	3 x DS0440
	DSA52CD745	745 VDC	2-pole	2	Yes	2 x DS0550
	DSA53CD745	745 VDC	3-pole (∅)	2	Yes	3 x DS0550
	DSA53CD1000	1000 VDC	3-pole (Y)	2	Yes	3 x DS0440
	DSA53XD1000	1000 VDC	3-pole (Y)	2	No	3 x DS0440
AC Surge Arrester DSA_A, DSA_P	**DSA52CA280N**	280 VAC	1-phase (1+1) for TN and TT systems	2	Yes	1 x DS0280 1 x DS0255N
	DSA54CP280N	280 VAC	3-phase (3+1) for TN and TT systems	2	Yes	3 x DS0280 1 x DS0255N
Data Surge Arrester DSA_S	**DSA51XXS**	/	Surge arrester for data transmission systems	/	No	/

Cartridge Specifications

			DS0440	**DS0550**	**DS0280**	**DS0255N**
Max. continuous operating voltage AC	U_C	V	440	550	280	255
Max. continuous operating voltage DC	U_C	V	585	745	350	/
SPD requirement class (EN 61643-11)				Type 2		Type 1+2
SPD requirement class (IEC 61643-1)				Class II		Class I + II
LPZ				1 2		0 2
Pulsed current (10/350)	I_{imp}	kA	/	/	/	25
Nominal discharge surge current (8/20)	I_n	kA	20	15	20	30
Max. discharge surge current (8/20)	I_{max}	kA	40		50	
Voltage protection level	U_p	kV	< 2.0	< 2.4	< 1.3	< 1.2
Response time	t_A	ns		< 25		< 100
Temperature range		°C		-40 to 80		

Surge Arrester for Data Specifications

			DSA51XXS
Nominal voltage	U_N	V	24
Max. continuous operating voltage AC	U_C AC	V	19.7
Max. continuous operating voltage DC	U_C DC	V	28
LPZ			0 3
Transmission frequency	f	MHz	0-100
Pulsed current (10/350)	I_{imp}	kA	6
Nominal discharge surge current (8/20)	I_n	kA	20

			DSA51XXS
Nominal load current	I_L	A	0.45
Protection level wire/wire		V	< 40
Protection level wire/earth		V	< 500
Series resistance	R	Ohm	2.2
Response time	t_A	ns	< 1
Temperature range		°C	-40 to 80
Protection degree			IP20
Connections			screwless
Width		mm	17.5
Wire section		mm^2	0.14 - 2.5

Dimensions (mm)

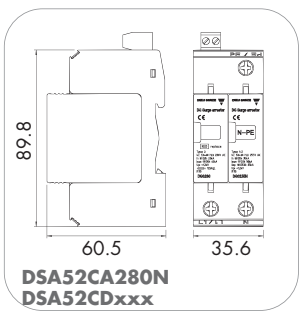

DSA52CA280N
DSA52CDxxx

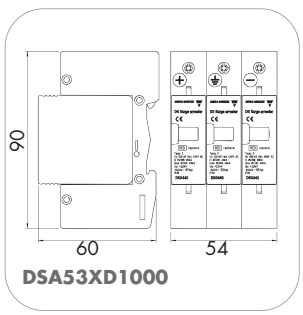

DSA53XD1000

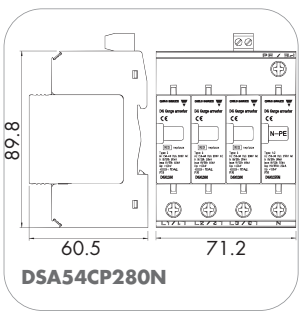

DSA54CP280N

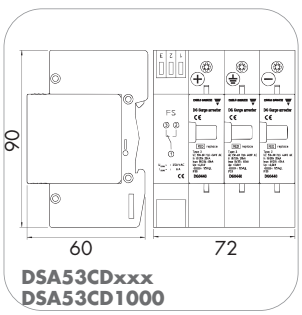

DSA53CDxxx
DSA53CD1000

DPY
Digital energy production display

With the DPY displays it is possible to remotely show the production of any power generation system. This device can become a powerful marketing and communication tool. The display communicates, by mean of its serial port RS232/RS485, with Modbus RTU protocol, with the remote device which is actually performing the reading of the data. Carlo Gavazzi suggests using it together with our energy meters EM24. If used in such a way, there is no need for any programming, it is "plug and play".
Standard dimensions are those listed in the data sheet but the display can be tailored to customer requirements, on the DPY 5, up to 1600 x 800mm.
Digits on the DPY 3 and DPY 5 have very bright yellow LEDs, are always 70mm high and can be read from more than 30 m. On the DPY 4 the LEDs are red and they are suitable only for indoor viewing.



Show generated energy and saved emissions

• High visibility
On the DPY 3 and DPY 5: very high brightness yellow LEDs, digit dimension 50x70mm, allowing reading from 30 m and more depending upon light conditions. The brightness of the LEDs is self adjusting, according to environmental light, for power saving in dark conditions.

• Displayable values
The DPY 3 has 3 fields in order to display: actual power, energy produced since installation and CO_2 emssions saved.
The DPY 5 has 5 rows, the first one displaying date/time and external temperature. On this device, besides the readings of the DPY 3, it is also possible to display the Irradiation in W/m^2 and, on the right hand side of the 'energy since installation' and the CO_2 saved, also the number of days since installation.
The DPY 4 has a different concept, as it is programmable. The different "pages" can be programmed individually and can be changed. The last row is a horizontally scrolling message and can also change page by page.

• Indoor/Outdoor
There are 2 constructions, one for indoor installation IP40 and one for outdoor IP54.

• Communication
Communication with the energy meters is by the RS232 or RS485 with Modbus RTU protocol. With the RS485 the maximum distance is 1,200m. Only 2 shielded wires are required.

• Customised look
Carlo Gavazzi provides standard DPY 3 panels with attractive nature panoramas, standard wording and the Carlo Gavazzi logo.
The DPY 4 and DPY 5 standard versions came with a black background and the Carlo Gavazzi logo.
All the displays can be customized with characters, wording, company logo and background pictures provided by the customer.

CARLO GAVAZZI Automation Components. Specifications are subject to change without notice. Illustrations are for example only.

General Data

DPY 3 Connection type	RS232 / RS485 COM
DPY 4 Connection type	RS232 / RS485 COM
DPY 5 Connection type	RS485 COM
Power supply	230 VAC @ 50 Hz

DPY 3 & DPY 5- Mechanical Data

Housing material	Aluminium
Frontal screen	Anti mirror screen
Frontal layout	Standard or custom (vinyl with 4 colours)
Fixing devices	Wall mounting brackets
Nuts/screws material	Stainless Steel
Installation location	Indoor/outdoor
Protection degree	
Indoor Version	IP40
Outdoor Version	IP54

DPY4 - Mechanical Data

Housing material	Aluminium
Frontal screen	Lexan 8mm/0.31"
Frontal layout	Standard or custom (vinyl with 4 colours)
Fixing devices	Wall mounting brackets
Nuts/screws material	Stainless steel
Installation location	Indoor
Protection degree	IP20

DPY3 & DPY5 - Display Data

DPY 3 Number of lines	3
Digit per line	5 + 6 + 6
DPY 5 Number of lines	5 (+1 additional field)
Digit per line	15 + 4 + 5 + 6 + 6 (4)
Digit dimension (LxH)	50x70 mm/1.97x2.76"
Pixels type	High brightness LEDs
Pixels colour	Yellow (standard) Red (optional)
Step	10 mm/0.39"
Autorange	only outdoor version
Brightness regulation	Automatic by crepuscular sensor

DPY4 - Display Data

Number of lines	4
Line dimension (LxH)	425x30 mm/16.73x1.18"
Pixels type	High brightness LEDs
Pixels colour	Red
Number of pixels	2688
Display information	
Row 1, 2, 3	User programmable
Row 4	Rolling / Scrolling programmable message

Dimensions (mm)

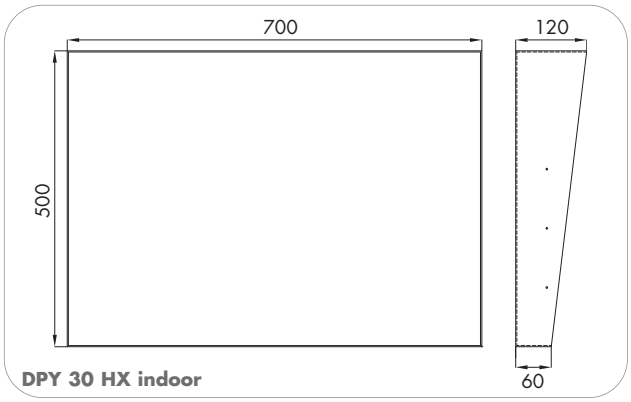

DPY 30 HX indoor

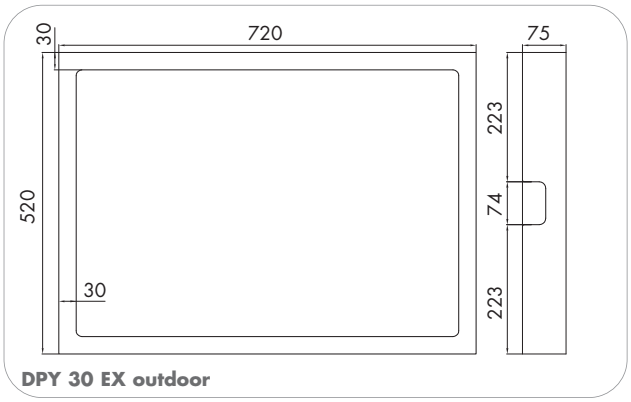

DPY 30 EX outdoor

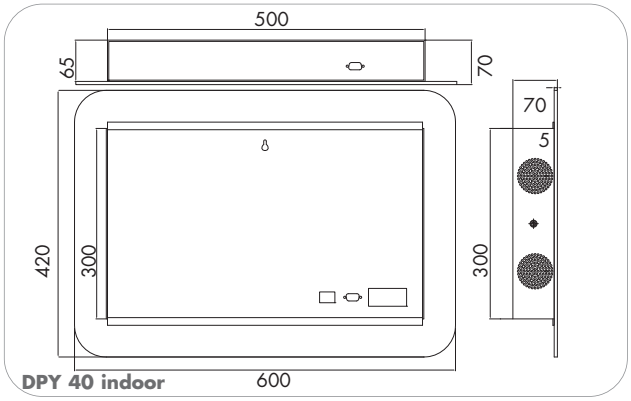

DPY 40 indoor

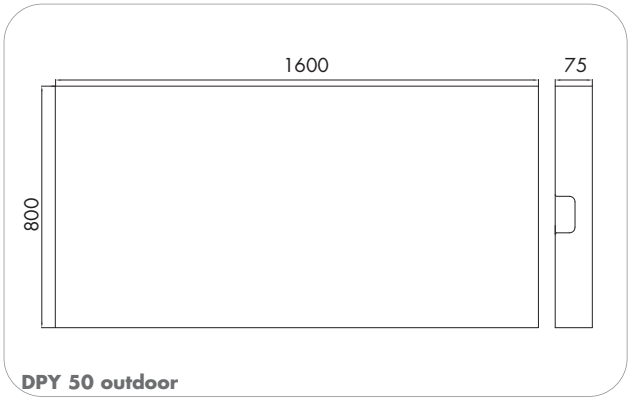

DPY 50 outdoor

CARLO GAVAZZI Automation Components. Specifications are subject to change without notice. Illustrations are for example only.

TEMPSOL, IKE20001K, CELLSOL200

Environmental sensors

Carlo Gavazzi, whose experience in the sensors field is well known, has developed these 3 sensors specifically for use in renewable energy applications.

The TEMPSOL has a special design for the measurement of temperatures on flat surfaces, such as the surface of photovoltaic modules.

The IKE20001K sensor is more specifically for open air temperature measurements. It has been designed to be suitable for any kind of environment, resistant to chemical aggression and, being IP67, it can also be used in liquid environments.

Silicon irradiation sensors CELLSOL200 should be commonly used in all monitored PV plants in order to determine precisely the amount of energy the sun is delivering per square metre at any time.



CELLSOL200 is a mono-crystalline silicon cell that provides an output voltage, proportional to the sun irradiation.

All environment sensors are very easy to use and they can be connected directly to Carlo Gavazzi Eos Array modules, in order to provide information to the Eos Array system, or connected to Carlo Gavazzi UDM40 or UDM60 in order to display the values directly.



Detect irradiation and temperature

• Precise output

Both temperature sensors have a tolerance on the reading of 0.3°C or 32.54°F and Class B accuracy according to EN60751/DIN43760.
Each CELLSOL200 sensor has been tested and calibrated individually, by Carlo Gavazzi, with a Sun Simulator Solar Constant 1200 with an ISE calibrated reference sensor. It will provide 75 mV at 1000 W/m of sun irradiation.
The calibration value is printed on the device for the user to be able to match it precisely with the instrument which this sensor will be connected to.

• All weather and long term reliability

All sensors can be used in any weather conditions and the CELLSOL200 with any inclination angle.
The materials used for their construction, the UV resistant cable, and the simple design with no electronic circuitry, guarantee long term durability and reliability.

• Easy Installation

TEMPSOL has a special self adhesive material on one side, which is also a good thermal conductor, and facilitates easy installation and temperature reading reliability.
CELLSOL200 is very simple and easy to install, with only one screw for mechanical installation. There is no need for a power supply, and only two wires for the signal.

CARLO GAVAZZI Automation Components. Specifications are subject to change without notice. Illustrations are for example only.

TEMPSOL - General Data

Sensor Pt100 and PT1000	-30°C to +150°C (200°C max.) -22°F to +302°F (392°F max.)
Tolerance	0°C ±0.3°C 32°F ±0.3°F
Accuracy	Class B according to EN60751/DIN43760

IKE20001K - General Data

Sensor	Pt 1000Ω @ 0°C acc. to IEC 751
Tolerance	0°C ±0.3°C 32°F ±0.3°F
Accuracy	Class B according to EN60751/DIN43760

TEMPSOL - Mechanical Data

Sensor type	Thermoresistance Pt100 or Pt1000
Mounting	Selfadhesive 30x10 mm
Housing	Encapsulate aluminium
Connection type	2 wires
Connection diameter	26 AWG
Wire length	2 m / 6.56 ft
Insulating material	White twisted teflon

IKE20001K - Mechanical Data

Sensor type	Thermoresistance Pt1000
Housing	Encapsulate thermoplastic
Connection type	2 wires
Connection diameter	22 AWG
Wire length	2 m / 6.56ft
Insulating material	Copper stranded wire isolated by TPE external diameter ~3.5 mm / 0.14"

TEMPSOL - Dimensions (mm)

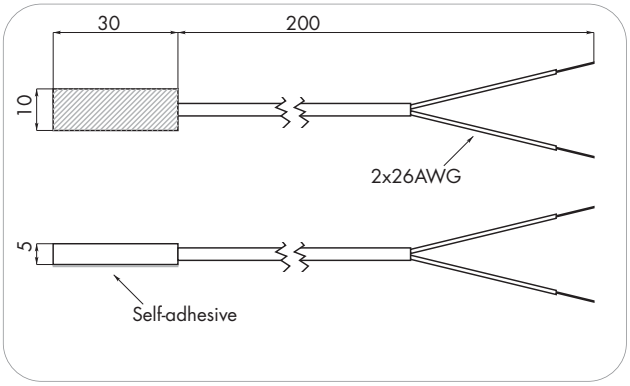

IKE20001K - Dimensions (mm)

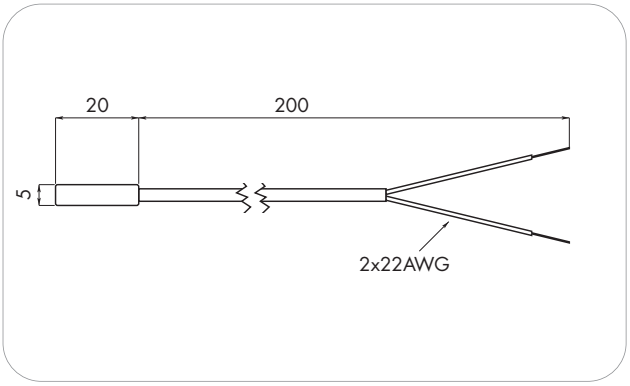

CELLSOL200 - General Data

Range	from 0 to 1500 W/m²
Accuracy	±5%, annual average
Output	Aprox. 75 mV @ 1000 W/m² (true value is reported on the label)

CELLSOL200 - Mechanical Data

Main structure	Anodized aluminium
Cable dimensions	100 x 40 x 40 mm UV proof 3 m
Fixing	1 hole Ø6 mm
Weight	~200 g (with cable)
Warranty	2 years

CELLSOL200 - Sensor Data

Sensor type	Mono-crystalline cell
Mounting	Novaflon and EVA sheet
Cell dimension	16 x 33 mm

CELLSOL200 - Dimensions (mm)

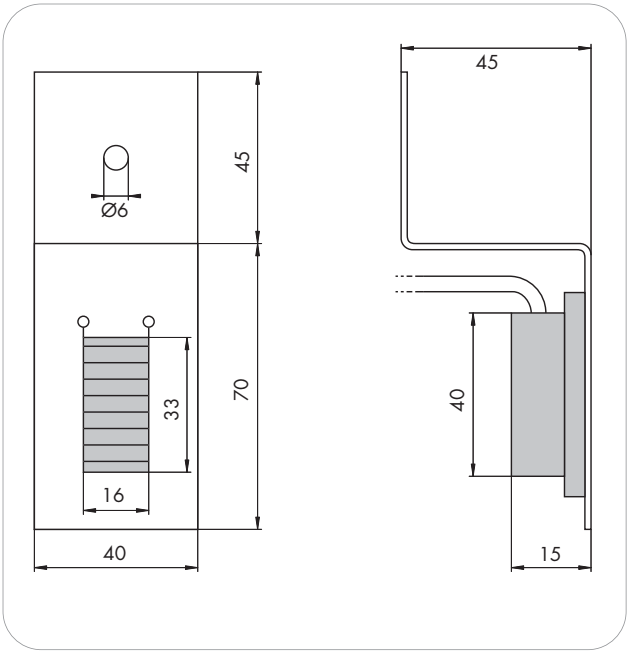

CARLO GAVAZZI Automation Components. Specifications are subject to change without notice. Illustrations are for example only.

DWS-D & DWS-V
Wind Vanes and Anemometers

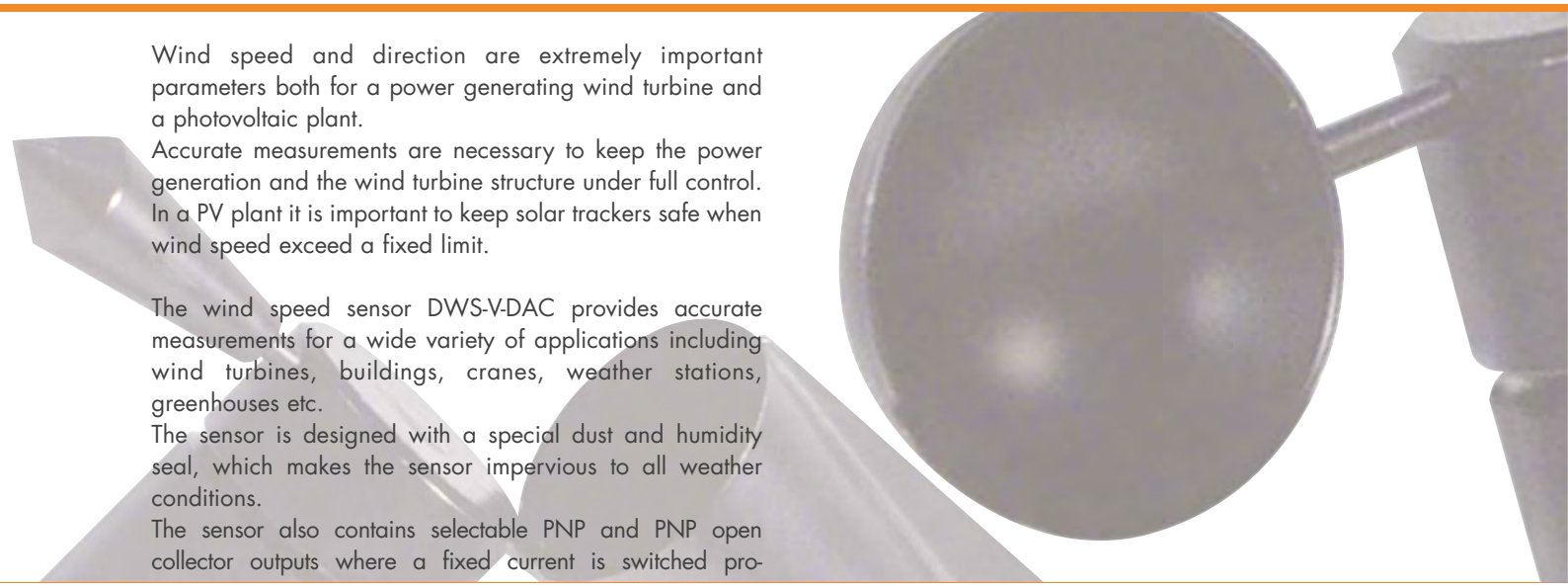

Wind speed and direction are extremely important parameters both for a power generating wind turbine and a photovoltaic plant.
Accurate measurements are necessary to keep the power generation and the wind turbine structure under full control.
In a PV plant it is important to keep solar trackers safe when wind speed exceed a fixed limit.

The wind speed sensor DWS-V-DAC provides accurate measurements for a wide variety of applications including wind turbines, buildings, cranes, weather stations, greenhouses etc.
The sensor is designed with a special dust and humidity seal, which makes the sensor impervious to all weather conditions.
The sensor also contains selectable PNP and PNP open collector outputs where a fixed current is switched proportionally to the air speed at a rate of 10 impulses per m/s.
A built-in self-regulating heater is standard, reducing the risk of ice; as it is supplied separately, the heating feature can also be controlled separately.

The relative direction sensor DWS-D-DAC is mainly designed for the wind turbine industry.
It registers and signals deflections in the wind direction from a fixed starting point. The sensor is designed with the same features as the wind speed sensor: Dust and humidity sealing, selectable PNP and NPN outputs and a self-regulating heater.



Keep production and structure under control

• Wind Vane
The DWS-D contains both PNP and NPN open collector outputs, in which a fixed current is switched according to the selected direction.
A built-in self-regulated heater reduces the risk of the unit icing-up. The heater is supplied separately, which makes it possible to control the heating.
The DWS-D is equipped with a specially designed protection mechanism, which protects the bearings and the electronic parts against dust and humidity.
The body of the sensor is made of black PVC, and the rotor is manufactured in stainless steel.

- Wind vane for relative wind direction
- Opto-electronic detection
- Indication of 0° and 90° intervals
- Indication of 0° and 90° intervals
- 10 to 28 VDC supply voltage
- All inputs and outputs are protected against reverse polarity and transients

• Cup Anemometer
The DWS-V contains both PNP and NPN open collector outputs, in which a fixed current is switched proportionally to the air speed at the rate of 10 pulses per m/s.
A built-in self-regulated heater reduces the risk of icing-up. The heater is supplied separately, which makes it possible to control the heating.
The DWS-V is equipped with a specially designed protection mechanism, which protects the bearings and the electronic parts against dust and humidity.
The body of the sensor is made of black PVC, and the rotor is manufactured in stainless steel.

- Anemometer with opto-electronic detection
- Measuring range: 2 to 30 m/s
- Current source outputs
- 10 to 28 VDC supply voltage
- All inputs and outputs are protected against reverse polarity and transients
- High ESD protection

CARLO GAVAZZI Automation Components. Specifications are subject to change without notice. Illustrations are for example only.

DWS-D & DWS-V - General Data

Materials	
Body	Black PVC
Rotor	Stainless steel (AISI 303), black painted
Bearings	Instrument ball bearings, stainless steel
Cable	13 m Shielded grey PVC, 8 x 0.25 mm^2
Rotor/housing tightening	Dust labyrinth
Environment	
Degree of protection	IP54
Ambient humidity	0 to 100% RH
Climatic protection	Against high humidity, salt and dust
Ambient temperature	
Operating temperature	-20 to 60°C (-4 to +140°F)
Storage temperature	-20 to 60°C (-4 to +140°F)
Heating system	> -20°C (> -4°F)
Heater	PTC-element
Supply voltage	12 to 24 VAC/DC on separate wires
	Only DWS-D-DDC13 electromagnetic fields thread.
Inrush current	1.5 A
Power consumption	@ -20°C (-4°F): app. 10 W @ +20°C (+68°F): app. 5 W @ +60°C (+140°F): app. 1.5 W
Mounting instruction	Mounted vertical with M28 thread.
	Only DWS-D marking (dot) on the housing indicates 0° position.

DWS-D - Signal

DWS-D-DAC13

wind direction	Bit 1	Bit 2
0° to 90°	0	1
90° to 180°	0	0
180° to 270°	1	0
270° to 360°	1	1
0°	Alternation between 0-1	1

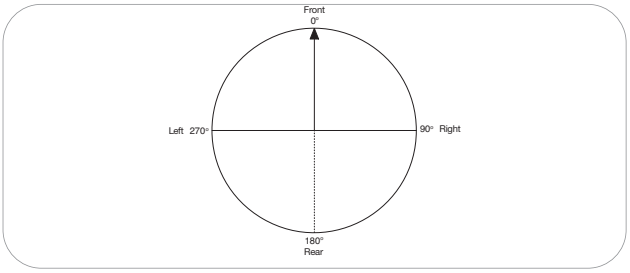

DWS-D-DDC13

wind direction	Bit 1	Bit 2
0° to 7°	0	1
7° to 180°	1	1
180° to -7°	1	0
-7° to 360°	0	0

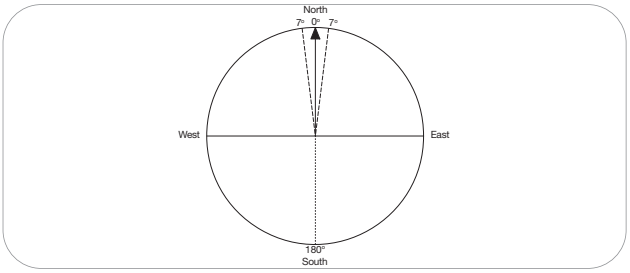

Dimensions (mm)

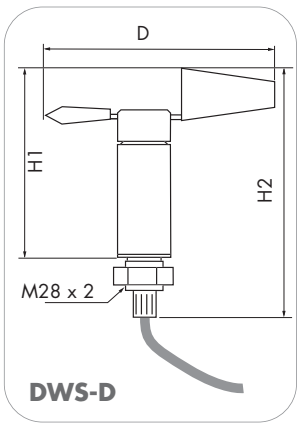

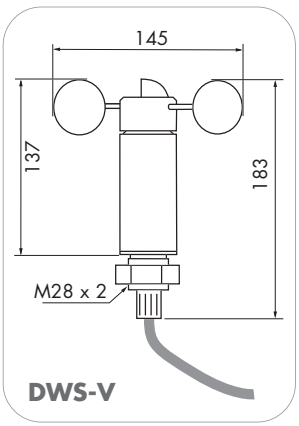

H1, H2 x D mm

DWS-D-DDC13
137, 183 x 145

DWS-D-DAC13
162, 207 x 174

DWS-V - PV Output vs Wind Speed

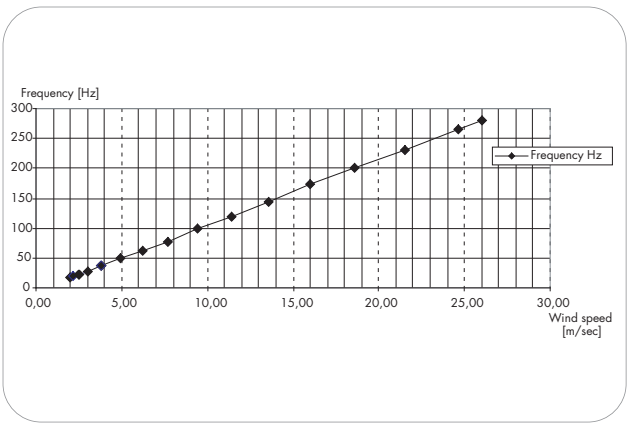

CARLO GAVAZZI Automation Components. Specifications are subject to change without notice. Illustrations are for example only.

Notes

Notes

Notes

Notes

OUR SALES NETWORK IN EUROPE

AUSTRIA - Carlo Gavazzi GmbH
Ketzergasse 374, A-1230 Wien
Tel: +43 1 888 4112
Fax: +43 1 889 10 53
office@carlogavazzi.at

BELGIUM - Carlo Gavazzi NV/SA
Schaarbeeklei 213/3, B-1800 Vilvoorde
Tel: +32 2 257 4120
Fax: +32 2 257 41 25
sales@carlogavazzi.be

DENMARK - Carlo Gavazzi Handel A/S
Over Hadstenvej 40, DK-8370 Hadsten
Tel: +45 89 60 6100
Fax: +45 86 98 15 30
handel@gavazzi.dk

FINLAND - Carlo Gavazzi OY AB
Petaksentie 2-4, FI-00661 Helsinki
Tel: +358 9 756 2000
Fax: +358 9 756 20010
myynti@carlogavazzi.fi

FRANCE - Carlo Gavazzi Sarl
Zac de Paris Nord II, 69, rue de la Belle Etoile, F-95956 Roissy CDG Cedex
Tel: +33 1 49 38 98 60
Fax: +33 1 48 63 27 43
french.team@carlogavazzi.fr

GERMANY - Carlo Gavazzi GmbH
Pfnorstr. 10-14
D-64293 Darmstadt
Tel: +49 6151 81000
Fax: +49 6151 81 00 40
info@gavazzi.de

GREAT BRITAIN - Carlo Gavazzi UK Ltd
7 Springlakes Industrial Estate,
Deadbrook Lane, Hants GU12 4UH,
GB-Aldershot
Tel: +44 1 252 339600
Fax: +44 1 252 326 799
sales@carlogavazzi.co.uk

ITALY - Carlo Gavazzi SpA
Via Milano 13, I-20020 Lainate
Tel: +39 02 931 761
Fax: +39 02 931 763 01
info@gavazziacbu.it

NETHERLANDS - Carlo Gavazzi BV
Wijkermeerweg 23,
NL-1948 NT Beverwijk
Tel: +31 251 22 9345
Fax: +31 251 22 60 55
info@carlogavazzi.nl

NORWAY - Carlo Gavazzi AS
Melkeveien 13, N-3919 Porsgrunn
Tel: +47 35 93 0800
Fax: +47 35 93 08 01
gavazzi@carlogavazzi.no

PORTUGAL - Carlo Gavazzi Lda
Rua dos Jerónimos 38-B,
P-1400-212 Lisboa
Tel: +351 21 361 7060
Fax: +351 21 362 13 73
carlogavazzi@carlogavazzi.pt

SPAIN - Carlo Gavazzi SA
Avda. Iparraguirre, 80-82,
E-48940 Leioa (Bizkaia)
Tel: +34 94 480 4037
Fax: +34 94 480 10 61
gavazzi@gavazzi.es

SWEDEN - Carlo Gavazzi AB
V:a Kyrkogatan 1,
S-652 24 Karlstad
Tel: +46 54 85 1125
Fax: +46 54 85 11 77
info@carlogavazzi.se

SWITZERLAND - Carlo Gavazzi AG
Verkauf Schweiz/Vente Suisse
Sumpfstrasse 32,
CH-632 Steinhausen
Tel: +41 41 747 4535
Fax: +41 41 740 45 40
info@carlogavazzi.ch

OUR SALES NETWORK IN NORTH AMERICA

USA - Carlo Gavazzi Inc.
750 Hastings Lane,
USA-Buffalo Grove, IL 60089,
Tel: +1 847 465 6100
Fax: +1 847 465 7373
sales@carlogavazzi.com

CANADA - Carlo Gavazzi Inc.
2660 Meadowvale Boulevard,
CDN-Mississauga Ontario L5N 6M6,
Tel: +1 905 542 0979
Fax: +1 905 542 22 48
gavazzi@carlogavazzi.com

MEXICO - Carlo Gavazzi Mexico S.A. de C.V.
Calle La Montaña no. 28, Fracc. Los Pastores
Naucalpan de Juárez, EDOMEX CP 53340
Tel & Fax: +52.55.5373.7042
mexicosales@carlogavazzi.com

OUR SALES NETWORK IN ASIA AND PACIFIC

SINGAPORE - Carlo Gavazzi Automation
Singapore Pte. Ltd.
61 Tai Seng Avenue
#05-06 UE Print Media Hub
Singapore 534167
Tel: +65 67 466 990
Fax: +65 67 461 980

MALAYSIA - Carlo Gavazzi Automation
(M) SDN. BHD.
D12-06-G, Block D12,
Pusat Perdagangan Dana 1,
Jalan PJU 1A/46, 47301 Petaling Jaya,
Selangor, Malaysia.
Tel: +60 3 7842 7299
Fax: +60 3 7842 7399

CHINA - Carlo Gavazzi Automation
(China) Co. Ltd.
Unit 2308, 23/F.,
News Building, Block 1,1002
Middle Shennan Zhong Road,
Shenzhen, China
Tel: +86 755 83699500
Fax: +86 755 83699300

HONG KONG - Carlo Gavazzi
Automation Hong Kong Ltd.
Unit 3 12/F Crown Industrial Bldg.,
106 How Ming St , Kwun Tong,
Kowloon, Hong Kong
Tel: +852 23041228
Fax: +852 23443689

OUR COMPETENCE CENTRES AND PRODUCTION SITES

Carlo Gavazzi Industri A/S
Hadsten - **DENMARK**

Carlo Gavazzi Automation
(Kunshan) Co., Ltd.
Kunshan - **CHINA**

Carlo Gavazzi Ltd
Zejtun - **MALTA**

Carlo Gavazzi Controls SpA
Belluno - **ITALY**

Uab Carlo Gavazzi Industri Kaunas
Kaunas - **LITHUANIA**

HEADQUARTERS

Carlo Gavazzi Automation SpA
Via Milano, 13 - I-20020
Lainate (MI) - **ITALY**
Tel: +39 02 931 761
info@gavazziautomation.com



Printed on 100% recycled paper produced using post consumer de-inked waste.

CARLO GAVAZZI
Automation Components

Carlo Gavazzi Automation SpA
Via Milano, 13 - 20020 Lainate (MI) - ITALY
Tel: +39 02 931 761 - info@gavazziautomation.com
www.gavazziautomation.com

ECOENERGY CAT ENG REV.00 11/10

Specifications are subject to change without notice. Illustrations are for example only.