

KACO new energy.

KACO blueplanet 87.0 TL3
KACO blueplanet 92.0 TL3
KACO blueplanet 105 TL3
KACO blueplanet 125 TL3
KACO blueplanet 137 TL3
KACO blueplanet 150 TL3
KACO blueplanet 155 TL3
KACO blueplanet 165 TL3
S; XL - Grid support Interactive Inverter

Manual

■English translation of German original

⚠ Authorised electrician

Important safety instructions

These instructions form part of the product and must be carefully read, observed and stored in a place which is freely accessible at all times.

EN

Legal provisions

The information contained in this document is the property of KACO new energy GmbH. Publication of this document, in whole or in part, is subject to the written consent of KACO new energy GmbH.

Definitions on product designations

In this Manual, the product "Photovoltaic feed-in inverter" is referred to as "device" for ease of reading.

Trademarks

All trademarks are recognised, even if not explicitly identified as such. A lack of identification does not mean that a product or designation/logo is free of trademarks.

Software

This device contains open source software that has been developed by third parties. The software is licensed, amongst others, under GPL and LGPL.

More details on this topic and a list of the open source software used, as well as the corresponding licence texts, can be found in the web interface information display under "Licence List".

KACO new energy.

EN

Photovoltaic feed-in inverter

Contents

1 General information 4
- 1.1 About this document 4
- 1.2 More information 4
- 1.3 Layout of Instructions 5
- 1.4 Identification 6
- 1.5 Warnings on the device 6
- 1.6 Target group 6

2 Safety 7
- 2.1 Intended use 7
- 2.2 Protection features 8

3 Description of the device 9
- 3.1 Mode of operation 9
- 3.2 Device diagram 9
- 3.3 System layout 11

4 Technical data 12
- 4.1 Electrical data 12
- 4.2 General data 14
- 4.3 Environmental data 15
- 4.4 Accessories 16

5 Transportation and Delivery 17
- 5.1 Scope of delivery 17
- 5.2 Transporting the device 17
- 5.3 Installation tool 17

6 Assembly and preparation 18
- 6.1 Choosing the installation location 18
- 6.2 Unpacking the device 19
- 6.3 Fastening the mount 20
- 6.4 Installing and securing the device 21

7 Installation 23
- 7.1 General information 23
- 7.2 Opening the device 23
- 7.3 Surveying the connection area 23
- 7.4 Making the electrical connection 24
- 7.5 Connecting the device to the power grid 25
- 7.6 Connecting the PV generator to the device 26
- 7.7 Inserting the overvoltage protection 29
- 7.8 Establishing equipotential bonding 30
- 7.9 Connecting the interfaces 31
- 7.10 Sealing the connection area 35

8 Commissioning 36
- 8.1 Requirements 36
- 8.2 Preconditions relating to standards 36
- 8.3 Network topologies 37
- 8.4 Start-up options 38

9 Configuration and operation 43
- 9.1 Initial start-up 43
- 9.2 Signal elements 44
- 9.3 User interface 46
- 9.4 Menu structure 49
- 9.5 Monitoring the device 72
- 9.6 Performing a firmware update 73
- 9.7 Access via Modbus 74

10 Specifications 75
- 10.1 Reactive power control 75
- 10.2 Active power regulation 84
- 10.3 FRT 90
- 10.4 Other grid-supporting functions that are effective in the case of active power 94
- 10.5 Advanced islanding detection 97
- 10.6 Q on Demand 98

11 Maintenance and troubleshooting 99
- 11.1 Visual inspection 99
- 11.2 Cleaning 99
- 11.3 Replacing the fan 100
- 11.4 Replacing overvoltage protection 102
- 11.5 Shutting down for maintenance / troubleshooting 102
- 11.6 Faults 102
- 11.7 Messages 104
- 11.8 Event messages 104

12 Decommissioning and dismantling 115
- 12.1 Switching off the device 115
- 12.2 Disconnecting connections 115
- 12.3 Uninstalling the device 115
- 12.4 Removing the device 116
- 12.5 Packaging the device 116
- 12.6 Storing the device 116

13 Disposal 117

14 Service and warranty 118

15 Appendix 119
- 15.1 EU Declaration of conformity (EN) 119
- 15.2 Standards & directives 119

EN

1 General information

1.1 About this document



⚠ WARNING

Improper handling of the device can be hazardous!

1. You must read and understand the manual in order to install and use the device safely.

Other applicable documents

During installation, observe all assembly and installation instructions for components and other parts of the system. These instructions also apply to the equipment, related components and other parts of the system.

Some of the documents required for the registration and approval of your system are included with the manual.

Storing the documents

These instructions and other documents must be stored near the system and be available at all times.

– The current version of the manual can be downloaded from .

English translation of German original

This document has been produced in several languages. The German-language version is the original version. All other language versions are translations of the original version.

This document is valid for the following types of device from firmware version V03.59 onwards

Modules *[KACO art. no.]*	KACO blueplanet 87.0 TL3 M1 WM OD IIF0 / KACO blueplanet 87.0 TL3 M1 WM OD IIFX	[1001784 / 1001897]
	KACO blueplanet 92.0 TL3 M1 WM OD IIG0 / KACO blueplanet 92.0 TL3 M1 WM OD IIGX	[1001785 / 1001898]
	KACO blueplanet 105TL3 M1 WM OD IIG0 / KACO blueplanet 105TL3 M1 WM OD IIGX	[1001941 / 1001951]
	KACO blueplanet 110 TL3 M1 WM OD IIK0 / KACO blueplanet 110 TL3 M1 WM OD IIKX	[1001786 / 1001892]
	KACO blueplanet 125 TL3 M1 WM OD IIP0 / KACO blueplanet 125 TL3 M1 WM OD IIPX	[1001623 / 1001894]
	KACO blueplanet 125TL3 M1 WM OD IIK0 / KACO blueplanet 125TL3 M1 WM OD IIKX	[1001942 / 1001952]
	KACO blueplanet 137 TL3 M1 WM OD IIP0 / KACO blueplanet 137 TL3 M1 WM OD IIPX	[1001787 / 1001895]
	KACO blueplanet 150 TL3 M1 WM OD IIQ0 / KACO blueplanet 150 TL3 M1 WM OD IIQX	[1001783 / 1001896]
	KACO blueplanet 155TL3 M1 WM OD IIP0 / KACO blueplanet 155TL3 M1 WM OD IIPX	[1001943 / 1001953]
	KACO blueplanet 165TL3 M1 WM OD IIQ0 / KACO blueplanet 165TL3 M1 WM OD IIQX	[1001944 / 1001954]

1.2 More information

Links to further information can be found at: www.kaco-newenergy.com

Document title	Document type
Technical data sheet	Product flyer
Modbus protocol RS485 protocol reactive power control	Application note
SunSpec information model reference SunSpec information model reference KACO	Excel files for software version with application note "Modbus protocol" under https://kaco-newenergy.com/downloads/
Software package	Files for current software

EN

Document title	Document type
EU Declaration of Conformity Country-specific certificates Module-specific certification	Certificates

1.3 Layout of Instructions

1.3.1 Symbols used

	General hazard		Fire and risk of explosion
	Electrical voltage		Risk of burns
	Earthing - ground conductor		

1.3.2 Safety warnings symbols guide



⚠ DANGER

High risk

Failure to observe this warning will lead directly to serious bodily injury or death.



⚠ WARNING

Potential risk

Failure to observe this warning may lead to serious bodily injury or death.



⚠ CAUTION

Low-risk hazard

Failure to observe this warning will lead to minor or moderate bodily injury.

⚠ CAUTION

Risk of damage to property

Failure to observe this warning will lead to property damage.

1.3.3 Additional information symbols



NOTE

Useful information and notes

Information that is important for a specific topic or objective, but that is not safety-relevant.

1.3.4 Symbols for instructions

↻ Prerequisite for use

1. Carry out the step
2. Additional action sequence

    ⇨ Interim result of the action

⇨ End result

EN

1.4 Identification

You will find the name plate with the following data for service and other requirements specific to installation on the right side panel of the product:

- Product name
- Part no.
- Serial number
- Date of manufacture
- Technical data
- Disposal information
- Certification marking, CE marking.

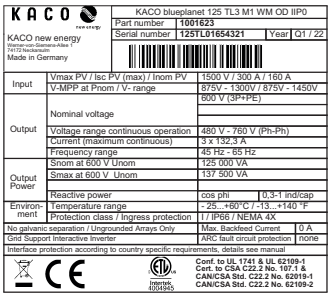

Fig. 1: Name plate

1.5 Warnings on the device

A warning label is affixed to the device. Please read the warning instructions carefully.

Do not remove this label. If the label is missing or illegible, please contact a KACO representative or dealer.

- Article number: 3013153



Fig. 2: Warning label

1.6 Target group

All activities described in the document may only be carried out by specially trained personnel with the following qualifications:

- Knowledge about how an inverter functions and operates
- Knowledge of the Modbus specifications
- Knowledge of the SunSpec Modbus specifications
- Training in the handling of hazards and risks during the installation and operation of electrical units and plants.
- Education concerning the installation and start-up of electrical devices and systems.
- Knowledge of applicable standards and directives.
- Knowledge and adherence to this document with all safety notices.

EN

2 Safety



⚠ DANGER

Lethal voltages are still present in the connections and cables of the device even after the device has been switched off and disconnected!

Severe injuries or death may occur if the cables and/or terminals/busbars in the device are touched.

1. Comply with all safety regulations and current technical connection specifications of the responsible power supply company.
2. The device is only permitted to be opened or serviced by a qualified electrician.
3. Switch off the grid voltage by turning off the external circuit breakers.
4. Do not touch the cables and/or terminals/busbars when switching the device on and off.
5. Keep the device closed when in operation.

The electrician is responsible for observing all existing standards and regulations. The following applies:

- Keep unauthorised persons away from the device and/or system.
- In particular, making sure that the locally applicable version of the standard [1] "Requirements for special installations or locations – solar photovoltaic (PV) power supply systems" is observed.
- Ensure operational safety by providing proper grounding, conductor dimensioning and appropriate protection against short circuiting.
- Observe the safety instructions on the product and in this manual.
- Switch off all voltage sources and secure them against being inadvertently switched back on before performing visual inspections and maintenance.
- When taking measurements on the live device:
  - Do not touch the electrical connections
  - Remove all jewellery from wrists and fingers
  - Ensure that the testing equipment is in safe operating condition.
- Modifications to the surroundings of the device must comply with the applicable national and local standards.
- When working on the PV generator, it is also necessary to switch off the DC voltage with the external DC isolator switch (e.g. at the string combiner or the KACO DC switchbox) in addition to disconnecting the PV generator from the grid.

2.1 Intended use

The device is a transformerless PV inverter which converts the direct current of the PV generator into grid-compatible three-phase alternating current and then feeds the three-phase alternating current into the public power grid.

The device is built using state-of-the-art technology and in accordance with the recognized safety rules. Nevertheless, improper use may cause lethal hazards for the operator or third parties, or may result in damage to the product and other property.

The device is intended for indoor and outdoor applications and may only be used in countries for which it has been approved or for which it has been released by KACO new energy and the grid operator. [2]

Operate the device only with a permanent connection to the public power grid. The country and grid type selection must be commensurate with the respective location and grid type.

[1]

Country	Standard
EU	Harmonised document - HD 60364-7-712 (European implementation of the IEC standard)
USA	PV section of NEC 690 and sections in article 100, 690.4, 690.6 and 705.10

Tab. 1: Examples of standards specific to business premises

[2] **WARNING! The device is not intended for use in residential areas and cannot ensure adequate protection of radio reception in such environments.**

EN

The requirements of the grid operator must be met for grid connection to take place. The permission of the relevant authorities may also be required in order to secure authorisation to connect to the grid.

The name plate must be permanently attached to the product and must be in legible condition.

Any other or additional use is not considered proper or intended use and can lead to an annulment of the product guarantee. This includes:

- Use of a distribution system that is not described (grid type)
- Use of sources other than PV-strings.
- Mobile use
- Use in rooms where there is a risk of explosion
- Use in direct sunlight, rain or a storm or other harsh environmental conditions
- Outdoor use in environmental conditions that exceed the limits stated in the technical specifications >Environmental data.
- Operation outside the specification intended by the manufacturer
- Overvoltage on the DC connection of over 1,500 V
- Device modification
- Standalone mode

2.2 Protection features

The following monitoring and protection functions are integrated in the device:

- RCMU (Residual Current Monitoring Unit)
- Overvoltage conductor / varistor to protect the power semiconductors from high-energy transients on the grid and generator sides.
- Device temperature monitoring system
- EMC filter to protect the product from high-frequency grid interference
- Grid-side varistors grounded to earth to protect the product against burst and surge pulses
- Anti-islanding detection according to the current standards
- ISO detection of a generator insulation fault.

NOTE

Overvoltage conductors / varistors influence the insulation resistance test when the device is connected

If the device is connected, the overvoltage conductors / varistors contained in the device have an impact on the electrical system insulation resistance test as per HD 60364-6 / IEC 60364-6 Low-voltage installations- Part 6: Verification.

IEC 60364-6 6.4.3.3 describes two options for this case. The first option is to disconnect devices with an overvoltage conductor or, if this is not practicable, then the test voltage can be reduced to 250 V.

EN

3 Description of the device

3.1 Mode of operation

The device converts the DC voltage generated by the PV modules into AC voltage and feeds it into the grid. The starting procedure begins when there is sufficient sunlight and a specific minimum voltage is present in the device. The feed-in process begins once the PV generator has passed the insulation test and the grid parameters are within the requirements imposed by the grid operator for a specific monitoring time. If, as it gets dark, the voltage drops below the minimum voltage value, feed-in mode ends and the device switches off.

3.2 Device diagram

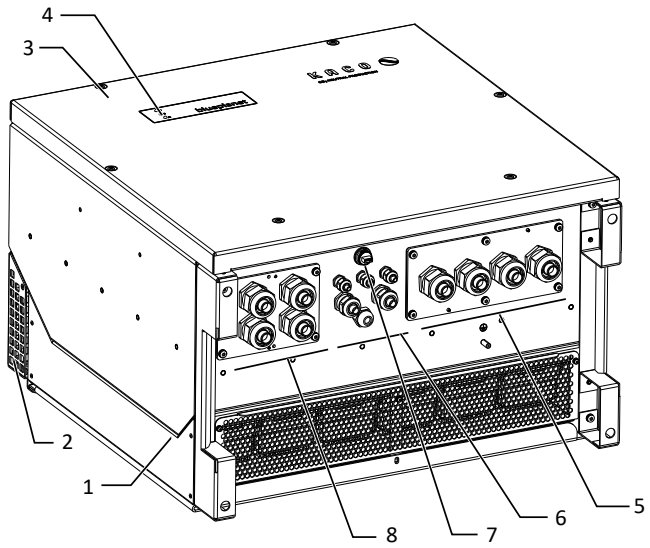

Fig. 3: Device diagram - S version

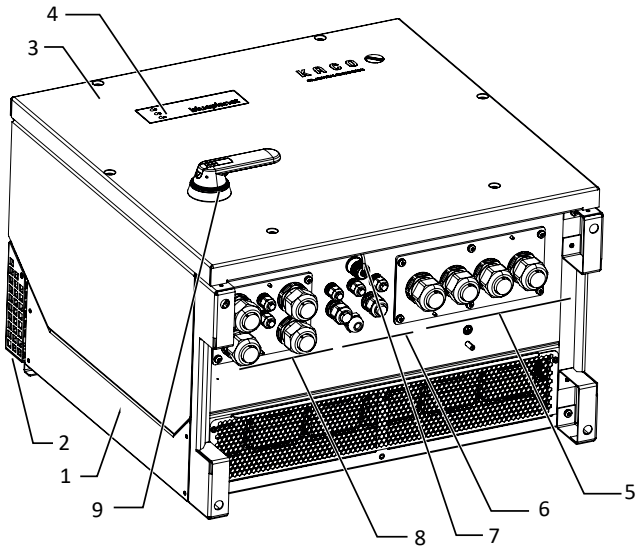

Fig. 4: Device diagram - XL version

Key

1	Housing	6	Interface / cable feed-through
2	Upper cover	7	USB socket
3	Cover	8	DC connection / cable feed-through
4	Status indicator	9	DC isolator switch (not present in S version)
5	AC connection / cable feed-through		

3.2.1 Mechanical components

DC isolator switch (not present in S version)

The DC isolator switch is located on the housing door. of the device. The DC isolator switch is used to disconnect the inverter from the PV generator in order to carry out service.

Disconnecting the device from the PV generator

☞ Switch the DC isolator switches from 1 (ON) to 0 (OFF).

Connecting the device to the PV generator

☞ Switch the DC isolator switches from 0 (OFF) to 1 (ON).

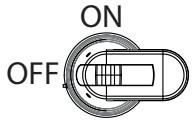

Fig. 5: DC isolator switch

3.2.2 Electrical functions

A potential-free relay contact is integrated into the device. Use this contact for one of the following functions:

Potential-free relay

The potential-free relay contact closes as soon as there is a fault during operation. You use this function, for example, to signal a fault visually or acoustically.

3.2.3 Interfaces

You can configure the interfaces and the web server in the Settings menu. The device has the following interfaces for communication and remote monitoring:

EN

Ethernet interface

Monitoring can occur directly on the device using the integrated Ethernet interface. A local web server is installed in the device for this purpose. This can also be used to request measured values remotely.

For monitoring a system comprising several inverters, we recommend you use an external data logging and monitoring system.

Ethernet interface

The device features two switched Ethernet ports to enable the user to, for example, connect several devices in series if the user prefers a linear topology.

RS485 interface

The device has two RS485 interfaces. An RS485 interface is provided for communication with a string combiner. This can be controlled using the Modbus RTU protocol. Data loggers that cannot be connected via Ethernet can be connected to the additional RS485 interface.

USB port

The device's USB connection is a type A socket. It is located on the communication circuit board. The USB connection is specified to draw 5V/500 mA of current.

Use the USB interface to read out stored operating data, load firmware updates or device configurations using a FAT32-formatted USB stick (max. 4GB).

It is possible to establish a connection to the webserver integrated into the device by connecting a USB-WiFi stick. In addition to commissioning, service information and firmware updates, more extensive configurations are also possible via the web interface.

"Inverter Off" input / DRM 0 for Australia

In addition to the safety functions, the internal interface switches can also be actuated via the "Inverter Off" input.

If a Powador-protect is used as the central interface protection, the fail-safe disconnection of suitable KACO inverters from the public grid can be carried out by the internal interface switches instead of separate interface switches. This requires the inverters in the photovoltaic system to be connected to the Powador-protect.

Information on installation and use can be found in this manual, in the Powador protect operating instructions and in the instructions for use of the Powador protect on the KACO web site.

On the "Inverter Off" input, instead of the Powador-protect an interface protection device from another supplier an also be connected to actuate the internal interface switches.

EN

3.3 System layout

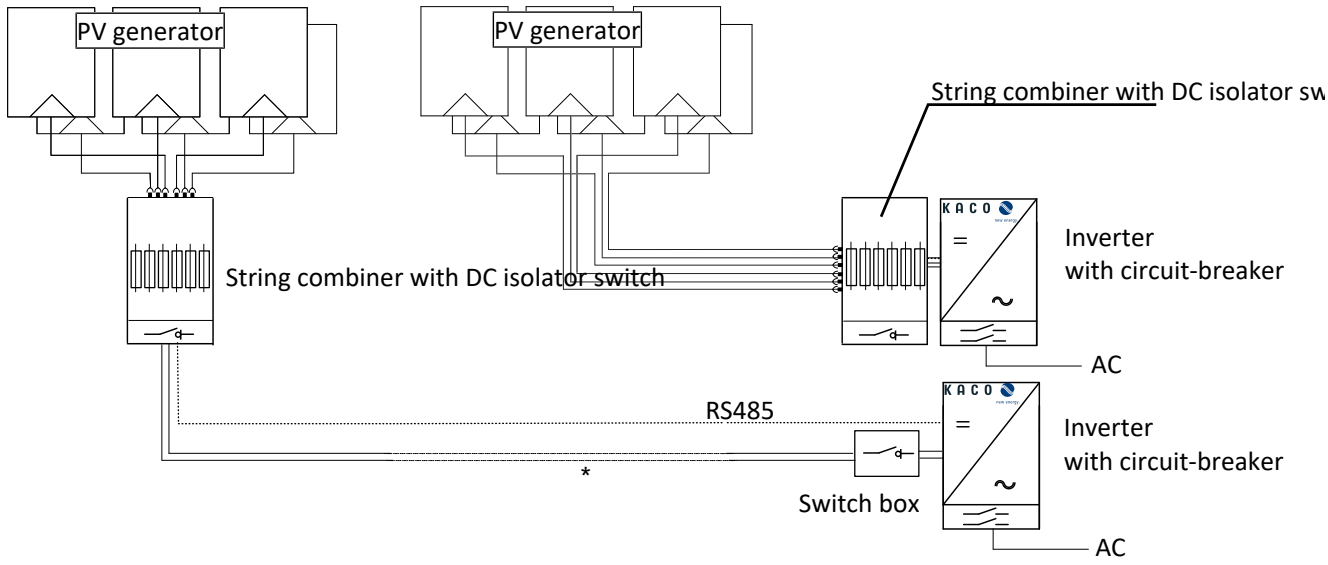

Fig. 6: Circuit diagram with a short or long supply cable to the inverter

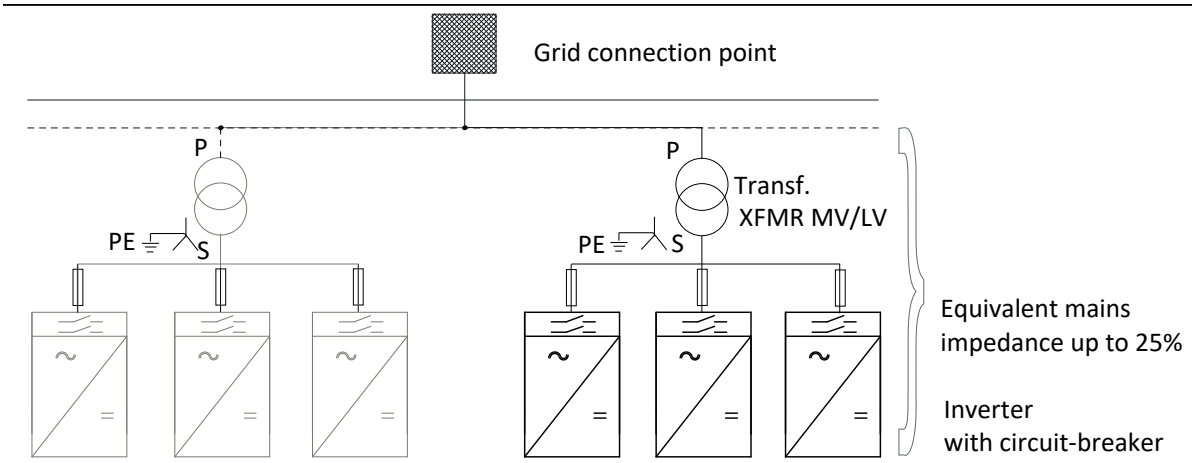

Fig. 7: Circuit diagram from the grid connection point to the inverter

Legend	Definition / information on the connection
PV-Generator	The PV generator converts the radiant energy of sunlight into electrical energy. .
String combiner	A string combiner can be connected to the KACO device to bundle the DC strings. *) If the supply line from the PV generator to the device is longer, the string combiner can also be installed near the PV generator. An integrated DC isolator switch provides DC-side isolation.
Switch box	A switch box with integrated DC isolator switch provides the DC-side isolation at the inverter.
Inverter with circuit-breaker	The PV generator is connected to the device's DC connection.
Trafo	All three phases need to be set up on the medium-voltage transformer or medium-voltage/high-voltage transformer. In this case, the total impedance of the transformer stations must be below 25%. **NOTE: The grounding takes place in the star point that is fed out. (Dy5) – More information under Downloads - Application note "Grid Type and impedance requirements …"**
Grid connection point	The clean PV-current is made available at the grid connection point.

EN

4 Technical data

4.1 Electrical data

DC input data	87.0 TL3	92.0 TL3	105 TL3	125 TL3
Maximum recommended PV generator power	130.5 kW	138 kW	157.5 kW	187.5 kW
MPPrange@Pnom	563 V–1,300 V	591 V–1,300 V		875 V–1,300 V
Working range	563 V–1,450 V	591 V–1,450 V	563 V–1,450 V	875 V–1,450 V
Rated voltage	600 V	620 V		900 V
Starting voltage	645 V	675 V		1,000 V
Open circuit voltage [3]	1,500 V			
Nominal PV current (Inom) [4]	160 A		183 A	160 A
Number of strings	1-2			
Number of MPP trackers	1			
Max. PV current (ISC max.)	300 A			
Input source feedback current	0 A			
Polarity safeguard	no			
String fuse	no			
Overvoltage protection	1 + 2			

DC input data	137 TL3	150 TL3	155 TL3	165 TL3
Maximum recommended PV generator power	205.5 kW	225 kW	232.5 kW	247.5 kW
MPPrange@Pnom	875 V–1,300 V	960 V–1,300 V	875 V–1,300 V	960 V–1,300 V
Working range	875 V–1,450 V	960 V–1,450 V	875 V–1,450 V	960 V–1,450 V
Rated voltage	900 V	1,000 V	900 V	1,000 V
Starting voltage	1,000 V	1,100 V	1,000 V	1,100 V
Open circuit voltage [3]	1,500 V			
Nominal PV current (Inom) [4]	160 A		183 A	
Number of strings	1-2			
Number of MPP trackers	1			
Max. PV current (ISC max.)	300 A			
Input source feedback current	0 A			
Polarity safeguard	no			
String fuse	no			
Overvoltage protection	1 + 2			

[3] A brief open circuit voltage of up to 1,600 V_{dc} (max. 15 hours a year) is admissible for the device.

Due to the brief open circuit voltage exceedance, there is no guarantee that the integrated overvoltage protection will work correctly if the ambient temperature is > 40 °C.

[4] The "Nominal PV current (Inom)" is the maximal theoretical value for operation with full power when the feed-in power is low. The device is limited to the maximum AC power.

The "Max. PV current ($ISC_{max.}$)" together with the open circuit voltage (U_{DCmax}) defines the characteristic of the connected PV generator. This is the relevant value for string design and represents the absolute maximum limit for inverter protection. The connected PV generator must be designed in such a way that the maximum PV current is less than or equal to the ISC_{max} of the device under all foreseeable conditions and therefore complies with IEC 61730 Class A. Under no circumstances may the design lead to a short-circuit current greater than the ISC_{max} of the device [See section 7.6.2 Page 27].

EN

AC output data	87.0 TL3	92.0 TL3	105 TL3	125 TL3
Rated power @ nominal voltage (x KVA@30°C/40°C/ 50°C)	87 kVA	92 kVA	99.9 kVA	125 kVA
Rated voltage	380 V (3P+PE)	400 V (3P+PE)	380 V (3P+PE) ; 400 V (3P+PE); 415 V (3P+PE)	600 V (3P+PE)
Voltage range: continuous operation	300 V–437 V	300 V–460 V	300 V–478 V	480 V–690 V
Rated current	3 x 132.3 A		3 x 144.5 A	3 x 120.3 A
Max. continuous current	3 x 132.3 A		3 x 152 A	3 x 132.3 A
Contribution to peak short-circuit current ip	193 A		260.8 A	193 A
Initial short-circuit alternating current (Ik" first single period effective value)	137 A		150.8 A	137 A
Short-circuit alternating current duration (max output fault current)	134 A		150 A	134 A
Inrush current	5 A [RMS (20 ms)]			
Rated frequency	50/60 Hz			
Frequency range	45–65 Hz			
Reactive power	0-100% Snom			
cos phi	0.3–1 ind/cap			
Number of feed-in phases	3			
Distortion factor (THD)	< 3%			
Overvoltage protection	Base			

AC output data	137 TL3	150 TL3	155 TL3	165 TL3
Rated power @ nominal voltage (x KVA@30°C/40°C/ 50°C)	137 kVA	150 kVA	155 kVA	165 kVA
Rated voltage	600 V (3P+PE)	660 V (3P+PE)	600 V (3P+PE)	660 V (3P+PE)
Voltage range: continuous operation	480 V–690 V	480 V–760 V	480 V–690 V	480 V–760 V
Rated current	3 x 132.3 A	3 x 131.2 A	3 x 149.5 A	3 x 144.5 A
Max. continuous current	3 x 132.3 A		3 x 152 A	
Contribution to peak short-circuit current ip	193 A		260.8 A	
Initial short-circuit alternating current (Ik" first single period effective value)	137 A		150.8 A	
Short-circuit alternating current duration (max output fault current)	134 A		150 A	
Inrush current	5 A [RMS (20 ms)]			
Rated frequency	50/60 Hz			
Frequency range	45–65 Hz			
Reactive power	0-100% Snom			
cos phi	0.3–1 ind/cap			
Number of feed-in phases	3			
Distortion factor (THD)	< 3%			

EN

AC output data	137 TL3	150 TL3	155 TL3	165 TL3
Overvoltage protection	Base			

4.2 General data

General data	87.0 TL3	92.0 TL3	105 TL3	125 TL3
Max. efficiency	98.9%		98.89%	99.2%
European efficiency	98.6%		98.56%	99.0%
Self consumption: Standby	< 10 W			
Feed-in from	> 200 W			
Circuit design	Transformerless			
Protection class / over voltage category	I / III (AC) II (DC)			
Grid monitoring	Country-specific			
Distribution system	TN-C system, TT system, Solid grounded wye			

General data	137 TL3	150 TL3	155 TL3	165 TL3
European efficiency	99.0%		98.89%	98.96%
Max. efficiency	99.2%		99.10%	99.14%
Self consumption: Standby	< 10 W			
Feed-in from	> 200 W			
Circuit design	Transformerless			
Protection class / over voltage category	I / III (AC) II (DC)			
Grid monitoring	Country-specific			
Distribution system	TN-C system, TT system, Solid grounded wye			

Mechanical data	87.0 TL3	92.0 TL3	105 TL3	125 TL3
Display	LEDs			
Controls	Web server			
Menu languages	EN; DE; FR; IT; ES; PL; NL; PT; CZ; HU; SL; TR; RO			
Interfaces	2 x Ethernet, USB, 2x RS485 (1x reserved for string combiner com.)			
Communication	TCP/IP, Modbus TCP based on Sunspec / RS485 (KACO protocol)			
Q on Demand	yes			
Potential-free relay	yes (integrated switch)			
DC isolator switch	no / yes (XL version)			
AC isolator switch	no			
Cooling	temp. regulated fan, max air throughput 364 m³/h			
Number of fans	3x outside, 1x inside			
Noise emission	< 60 dB(A)			
Housing material	AL			
HxWxD	719 mm x 699 mm x 460 mm			
Weight	78.2 kg			
Safety	EN 62109-1, EN 62109-2			
Interference immunity/ interference emission/ grid feedback	EN 61000-6-1, EN 61000-6-2, EN 62920 - Class A / EN 61000-6-4, EN 62920 - Class A, EN 55011 - group 1 Class A / EN 61000-3-11, EN 61000-3-12			
*	+ UL62109-1, UL1741			
Certifications	Overview: see homepage, download area			

Mechanical data	137 TL3	150 TL3	155 TL3	165 TL3
Display	LEDs			

EN

Mechanical data	137 TL3	150 TL3	155 TL3	165 TL3
Controls	Web server			
Menu languages	EN; DE; FR; IT; ES; PL; NL; PT; CZ; HU; SL; TR; RO			
Interfaces	2 x Ethernet, USB, 2x RS485 (1x reserved for string combiner com.)			
Communication	TCP/IP, Modbus TCP based on Sunspec / RS485 (KACO protocol)			
Q on Demand	yes			
Potential-free relay	yes (integrated switch)			
DC isolator switch	no / yes (XL version)			
AC isolator switch	no			
Cooling	temp. regulated fan, max air throughput 364 m³/h			
Number of fans	3x outside, 1x inside			
Noise emission	< 60 dB(A)			
Housing material	AL			
HxWxD	719 mm x 699 mm x 460 mm			
Weight	78.2 kg			
Safety	EN 62109-1, EN 62109-2			
Interference immunity/ interference emission/ grid feedback	EN 61000-6-1, EN 61000-6-2, EN 62920 - Class A / EN 61000-6-4, EN 62920 - Class A, EN 55011 - group 1 Class A / EN 61000-3-11, EN 61000-3-12			
*	n.a.	+ UL62109-1, UL1741		
Certifications	Overview: see homepage, download area			

4.3 Environmental data

Environmental data	87.0 TL3	92.0 TL3	105 TL3	125 TL3
Installation height	3,000 m (derating from 2,000 m)			
Installation distance from coast	> 500 m			
Ambient temperature	-25–+60 °C			
Ambient temperature (storage)	-25–+60 °C			
Power derating from	> 45 °C		> 35 °C	> 45 °C
Protection rating (installation location)	IP66 /NEMA 4X			
Humidity range (non-condensing)	100%			
Pollution level inside the enclosure	2 (reduced by IP 66 Housing)			
Pollution level outside the enclosure	3			
Item number	1001784 / 1001897	1001785 / 1001930 / 1001898	1001941 / 1001951	1001623 / 1001893
Name on nameplate	KACO blueplanet 87.0 TL3 M1 WM OD IIF0 / KACO blueplanet 87.0 TL3 M1 WM OD IIFX	KACO blueplanet 92.0 TL3 M1 WM OD IIG0 / KACO blueplanet 92.0 TL3 M1 WM OD IIGX	KACO blueplanet 105TL3 M1 WM OD IIG0/KACO blueplanet 105TL3 M1 WM OD IIGX	KACO blueplanet 125 TL3 M1 WM OD IIP0 / KACO blueplanet 125 TL3 M1 WM OD IIPX

Environmental data	137 TL3	150 TL3	155 TL3	165 TL3
Installation height	3,000 m (derating from 2,000 m)			
Installation distance from coast	> 500 m			

EN

Environmental data	137 TL3	150 TL3	155 TL3	165 TL3
Pollution level inside the enclosure	2 (reduced by IP 66 Housing)			
Pollution level outside the enclosure	3			
Ambient temperature	-25–+60 °C			
Ambient temperature (storage)	-25–+60 °C			
Power derating from	> 45 °C		> 35 °C	
Protection rating (installation location)	IP66 /NEMA 4X			
Humidity range (non-condensing)	100%			
Item number	1001787 / 1001934 / 1001895 / 1001936	1001783 / 1001935 / 1001896 / 1001937	1001943 / 1001953	1001944 / 1001954
Name on nameplate	KACO blueplanet 137 TL3 M1 WM OD IIP0 / KACO blueplanet 137 TL3 M1 WM OD IIPX	KACO blueplanet 150 TL3 M1 WM OD IIQ0 / KACO blueplanet 150 TL3 M1 WM OD IIQX	KACO blueplanet 155TL3 M1 WM OD IIP0/KACO blueplanet 155TL3 M1 WM OD IIPX	KACO blueplanet 165TL3 M1 WM OD IIQ0 / KACO blueplanet 165TL3 M1 WM OD IIQX

4.4 Accessories

Accessory articles	KACO order no.
Bending box	1001917
AC inverter input plate kit	1001882 (double row) / 1001906 (M63/32)
AC inverter overvoltage protection kit	1001884
DC inverter overvoltage protection kit	1001885
LAN inverter overvoltage protection kit	1001886
RS485 inverter overvoltage protection kit	1001887
PID connection set	1001888
WLAN adapter, Digitus 150N micro	3013222

Accessory articles	KACO order no.
Replacement fuses (10x85mm 1500V 5A PID)	1001883

EN

5 Transportation and Delivery

Every product leaves our factory in perfect electrical and mechanical condition. Special packaging ensures that the devices are transported safely. The shipping company is responsible for any transport damage that occurs.

5.1 Scope of delivery

- Inverter
- Mount
- Installation kit
- Manual [online] / Quickguide [multi-language]

Check the equipment included

1. Inspect the device thoroughly.
2. Immediately notify the shipping company in case of the following:
   - Damage to the packaging that indicates that the device may have been damaged.
   - Obvious damage to the device.
3. Send a damage report to the shipping company immediately.
4. The damage report must be received by the shipping company in writing within 6 days following receipt of the device. We will be glad to help you if necessary.

5.2 Transporting the device

⚠ CAUTION

Hazard due to impact; risk of breakage to the device!

1. Pack the device securely for transport.
2. Transport the device using the intended carrying handles of the packaging box.
3. Do not expose the device to any shocks.

For safe transportation of the product, use the hand recesses in the carton.

Packaging	Folding cardboard box
Height x width x depth	830x780x550 mm
Total weight	87 kg

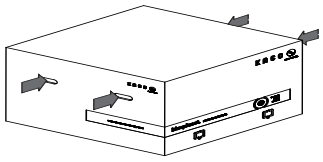

Fig. 8: Transporting the device

5.3 Installation tool

The codes given in the table below are used in all usage instructions for assembly/installation/maintenance and disassembly for the tools and tightening torques being used.

Symbol	Contour screw head	Symbol	Contour screw head
W	Outer hexagon	A	Internal hexagon
T	Torx	S	Slot

Tab. 2: Legend Description Tool abbreviation

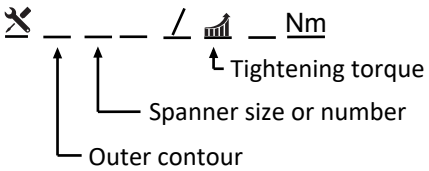

Fig. 9: Presentation format

EN

6 Assembly and preparation

6.1 Choosing the installation location

⚠ DANGER

Risk of fatal injury due to fire or explosions

Fire caused by flammable or explosive materials in the vicinity of the device can lead to serious injuries.

1. Do not mount the device in potentially explosive atmospheres or in the vicinity of highly flammable materials.

⚠ CAUTION

Risk of property damage due to gases that have an abrasive effect on surfaces when they come into contact with ambient humidity caused by weather conditions!

The device housing can be seriously damaged due to gases in combination with air humidity resulting from weather conditions (e.g. ammonia, sulphur).

1. If the device is exposed to gases, it must be installed in a location that is visible.
2. Perform regular visual inspections.
3. Immediately remove any moisture from the housing.
4. Ensure adequate ventilation at the installation location.
5. Immediately remove dirt, especially on vents.
6. Failure to observe these warnings may result in damage to the device that is not covered by the warranty.

NOTE

Access by maintenance personnel for service

Any additional costs arising from unfavourable structural or installation conditions will be billed to the customer.

Installation space

- As dry as possible, climate-controlled, the waste heat must be dissipated away from the device.
- Unobstructed air circulation.
- Close to the ground, accessible from the front and sides without requiring additional resources.
- In outdoor areas, KACO new energy recommends protecting the device from direct weather exposure and sunlight. This should be carried out by means of constructional measures (e.g. wind breaks) in order to reduce thermal heating of the components, premature derating and more extensive wear of the fans.

Installation surface

- Must have adequate load-bearing capacity
- Must be accessible for installation and maintenance
- Must be made out of heat-resistant material (up to 90 °C)
- Must be flame resistant
- Minimum clearances to be observed during installation: [See figure 17 [▶ Page 20]

EN

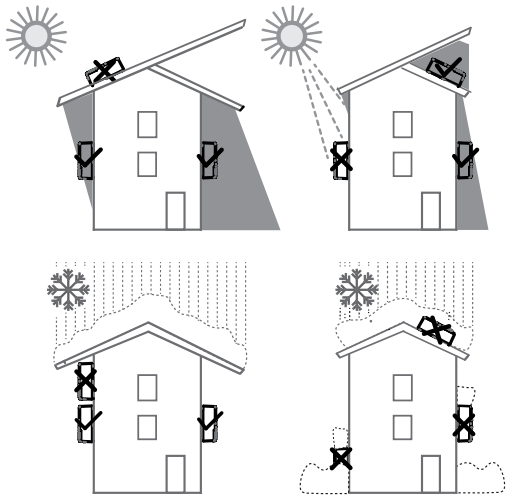

Fig. 10: Device for outdoor installation

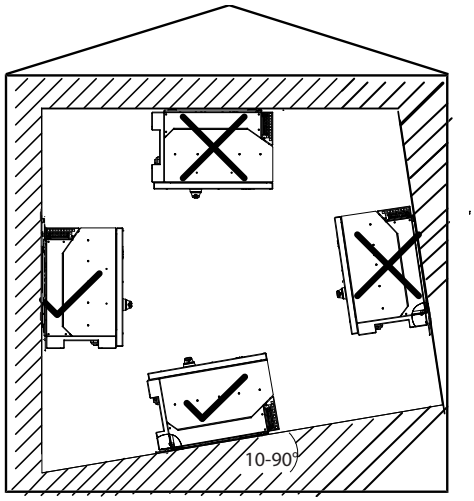

Fig. 11: Permissible installation location

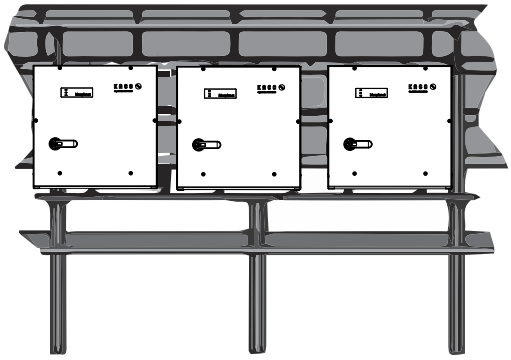

Fig. 12: Free-standing mounting under PV system

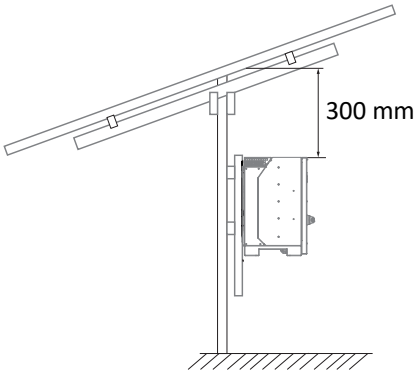

Fig. 13: Mounting instruction under PV system

6.2 Unpacking the device

⚠ CAUTION

Risk of injury caused by excessive physical strain.

Lifting the device for transportation, to change location and during installation can lead to injuries (e.g. spinal injuries).

1. Only lift the device using the openings provided.
2. The device must be transported and installed by at least 3-4 persons.
3. Be mindful of the weight of the device and use aids to secure it.

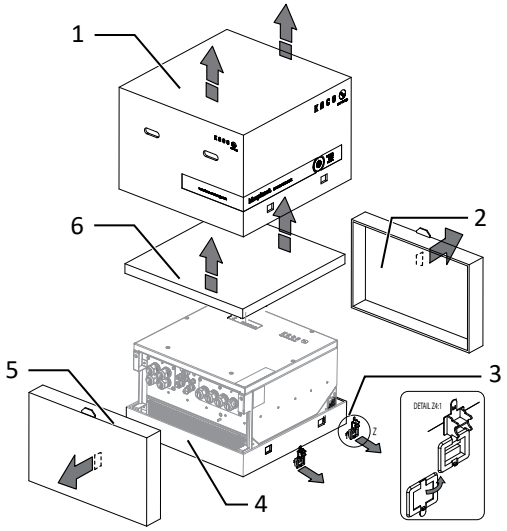

Fig. 14: Open the package

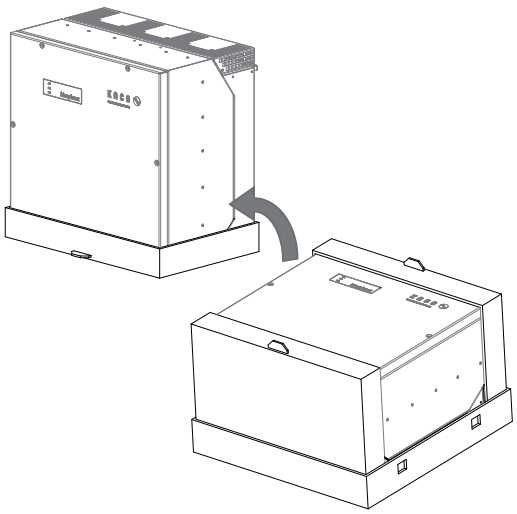

Fig. 15: Setting the device upright

EN

Key			
1	Cover	4	Base
2	Side section - upper	5	Side section - lower
3	Clamp (4x)	6	Cardboard packaging with mount and mounting kit

↻ The device is transported to the installation location.

1. Remove the plastic band from the pallet and packaging.
2. Pull the clamp off the packaging.
3. Pull the hood upwards to remove it and place the cardboard packaging to one side together with the mount and accessories.
4. Set the unit with base and side sections upright.
5. Remove the top side section and base from the device.

⇨ If the unit is in the correct installation position: Proceed with the installation of the mount.

6.3 Fastening the mount

⚠ WARNING

Hazard when using unsuitable fixing materials!

If unsuitable fixing materials are used, the device could fall and persons in front of the device may be seriously injured.

1. Use only fixing materials that are suitable for the mounting base. The fastening materials supplied are only to be used for masonry and concrete.
2. Only install the device in an upright hanging position.

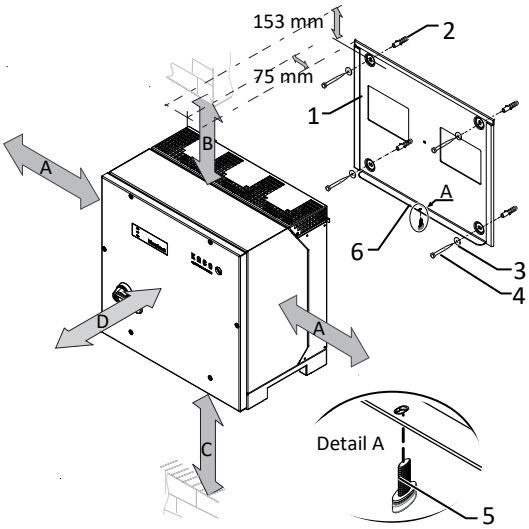

Fig. 16: Minimum clearances for wall mounting

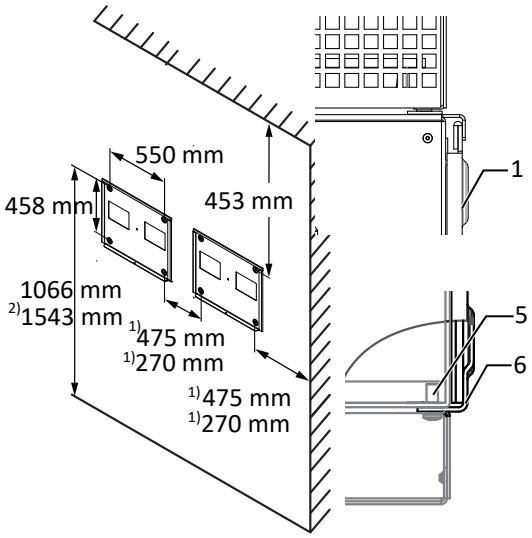

Fig. 17: Wall mounting

Legend			
1	Mount	4	Screw for mounting (4x) [SW 13 / [See section 6.3 Page 20]]
2	Fastening anchors [S12-Ø12 mm / 25 mm]	5	Screw for securing purposes (1x)
3	Lock washer	6	Bracket to store the device
A	Minimum clearance: 120 mm	1)	Minimum clearance excluding device:270 mm
	Recommended clearance: 400 mm	1)	Recommended clearance excluding device:475 mm
B	Minimum clearance: 300 mm	-	-
C	Minimum clearance: 500 mm	-	-
D	Recommended clearance: 1000 mm	2)	Recommended clearance with DC breaker:1543 mm

↻ Cardboard packaging with mount and mounting kit removed from the packaging and opened.

1. Check condition and minimum room height according to specified dimensional data.
2. Mark the suspension position on the wall surface according to the bore holes in mounting plate.

EN

. **NOTE: The minimum clearances between two devices, or the device and the ceiling/floor have already been taken into account in the diagram.**

3. Fix the mount to the wall using suitable mounting fixtures from the mounting kit.

. **NOTE: Make sure that the mount is oriented correctly.**

⇨ Proceed with the installation of the device.

6.4 Installing and securing the device

⚠ CAUTION

Risk of injury from improper lifting and transport.

If the device is lifted improperly, it can tilt and result in a fall.

1. The device must be transported and installed by at least 3-4 persons.
2. Always lift the device vertically using the openings provided.
3. Use a climbing aid for the chosen installation height.
4. Wear protective gloves and safety shoes when lifting and lowering the device.

NOTE

Power reduction due to heat accumulation!

If the recommended minimum clearances are not observed, the device may go into power regulation mode due to insufficient ventilation and the resulting heat build-up.

1. Observe minimum clearances and provide for sufficient heat dissipation.
2. All objects on the device housing must be removed during operation.
3. Ensure that no foreign bodies prevent heat dissipation following device installation.

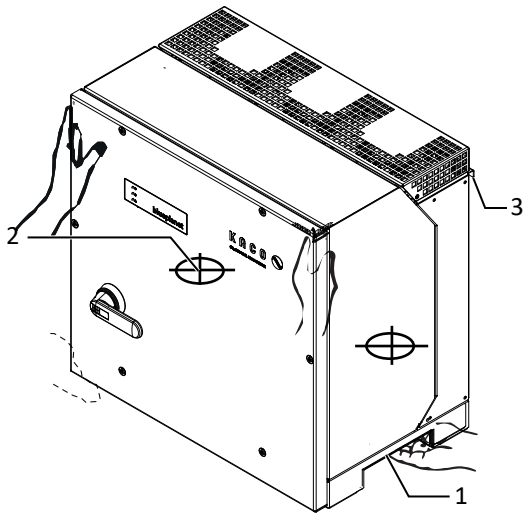

Fig. 18: Lift the device using the opening

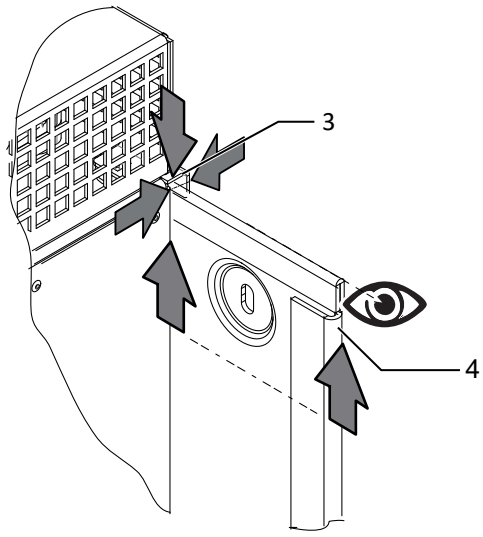

Fig. 19: Fitting the device onto the mount

Key			
1	Opening	3	Mounting bracket
2	Centre of gravity	4	Mount

Lifting and installing the device

↻ The mount has been installed.

1. Raise the device using the lower side recesses and support it on the head side. Observe the device's centre of gravity!

. **NOTE: Do not lift the device by the lid or cover!**

2. Fit the device onto the upper mount by means of the mounting bracket. Fit the device onto the lower mounting bracket in full so that the device sits flush with its rear side on the mount ([See figure 17 [▸ Page 20]).
3. Insert the screw provided into the lug of the mount and [T30 / 2 Nm] ([See figure 16 [▸ Page 20]).

⇨ Device is installed. Proceed with the electrical installation.

EN

⚠ CAUTION

Risk of damage to property as a result of condensation

During pre-assembly of the device, moisture can penetrate into the interior via the dust-protected threaded connections. The resulting condensate can cause damage to the device during installation and start-up.

✓ Keep the device closed during pre-assembly and do not open the connection area until you perform installation.

1. Seal off the screw connections using sealing covers.
2. Prior to installation, check the inner area for condensation and if necessary, allow it to dry sufficiently before installation.
3. Immediately remove any moisture from the housing.

EN

7 Installation

7.1 General information

↻ **NOTE: S version: The device is shut down externally at the string collector.**.

1. Switch the DC isolator switch from 1 (ON) to 0 (OFF).
2. Press in the safety catch (1) from behind.
3. Attach the hanging lock (2) to the safety catch.

. **DANGER! A measurement in a live state may be required for tests. Only appropriately qualified electricians authorised by the mains supply network operator are permitted to open and maintain the device.**

. **DANGER! Observe all safety regulations for preventing contact with live parts.**

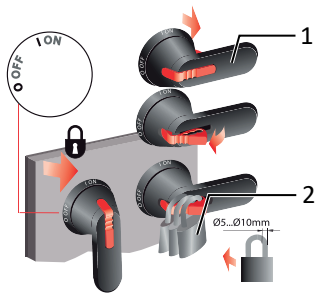

Fig. 20: Locking DC circuit breakers to prevent reconnection

1 Switch with safety clip
2 Padlock

7.2 Opening the device

↻ The device has been installed on the mount.
↻ Wipe any moisture off the frame of the housing cover using a cloth.

☞ Undo the 6 screws (2) and carefully remove the housing cover (1) [✕T_25]

☞ Take care not to damage or soil the seals and fibre optics when setting down the housing cover.

⇨ Proceed with the installation of the device.

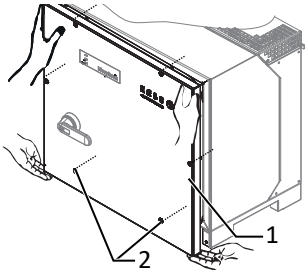

Fig. 21: Removing the housing cover

7.3 Surveying the connection area

The connection point for the AC supply is situated inside the housing. The DC input source is also connected inside the housing.

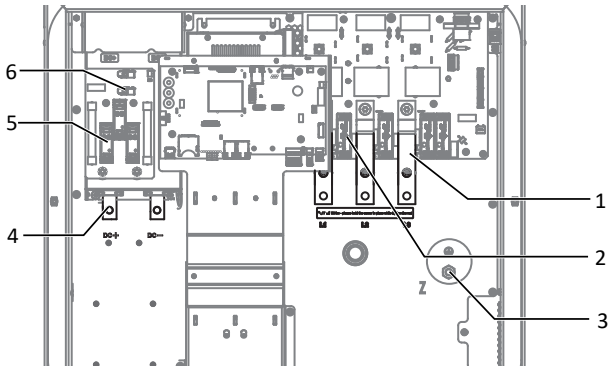

Fig. 22: Connection area on DC side (left) / AC side (right)

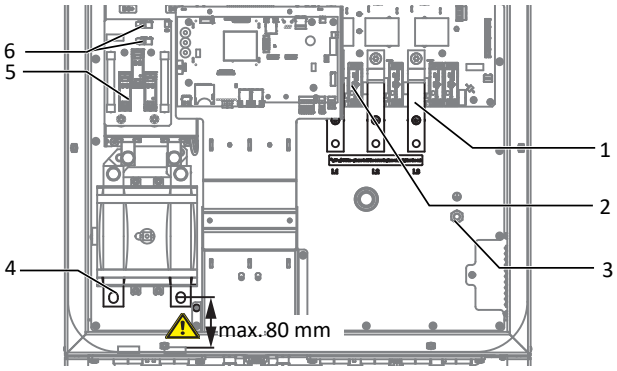

Fig. 23: Connection area (XL - Version)

Key			
1	AC connection point	4	DC connection point
2	AC overvoltage protection base	5	DC overvoltage protection
3	AC earthing bolt	6	PID connection point

EN

7.4 Making the electrical connection

NOTE

Select the cable cross-section, fuse type and fuse value in accordance with the following master conditions

Country-specific installation standards; power rating of the device; cable length; type of cable installation; local temperatures.

7.4.1 Requirement for supply lines and fuse

AC-side	
Max. conductor cross-section	2x 240 mm² (AL or CU) [5]
Min. cable cross-section	in accordance with local installation standards
Cable diameter for cable fitting	16–28 mm
Length of insulation to be stripped off	Depending on the cable lug
Cable lug Ø connection bolt	Bore for M10 screw
Tightening torque	30 Nm
Connection type	Cable lug (use the appropriate cable lug depending on the cable material!)
Cable lug dimension w - maximum width	42 mm
Ground conductor connection	M10
Ground conductor connection tightening torque	10 Nm
Fuse protection for installation provided by customer (max output overcurrent protection)	max. 250 A
Fitting for AC connection	M40
Torque for cable fitting	10 Nm
DC-side	
Max. conductor cross-section	240 mm² (AL or CU)
Min. cable cross-section	in accordance with local installation standards
Cable diameter for cable fitting	16–28 mm
Cable lug dimension w width max	42 mm
Length of insulation to be stripped off	Depending on the cable lug
Recommended cable type	Solar cable
Cable lug Ø connection bolt	Bore for M10 screw
Tightening torque	30 Nm
Fitting for DC connection	M40
Torque for cable fitting	10 Nm
Interfaces	
Cable diameter for cable fitting	(2x) 8–17 mm
Torque for cable fitting	4 (M25) 1.5 (M16) Nm
RS485 connection type	Spring-type terminal
RS485 terminal cable cross-section	0.25–1.5 mm²
Cable diameter for cable fitting	(3x) 5–10 mm
Torque for cable fitting	4 (M25) Nm
Ethernet connection type	RJ45

[5] Option: 50 mm² with 2x5 AC cable. The optionally available input plate is required for this! [See section 4.4 Page 16]

EN

7.5 Connecting the device to the power grid

⚠ WARNING

IP66 (IEC 60529) not guaranteed!

Ingress of condensation, dust, or insects/small animals may cause short circuits/overheating and lead to device failure.

1. Tighten **all** cable glands, blanking plugs, and enclosure fasteners to the **specified torque values**.
2. If cable entries are not used, keep the blanking plugs installed and tightened to the specified torque.

7.5.1 Preparing the grid connection

↻ Connection cable with 4 wires (4 single cores or multi-core) up to a maximum cable cross-section 16 mm - is available on the device.
↻ Time required for AC connection: 30 minutes
↻ The nominal grid voltage matches the “VAC nom” value on the nameplate.

1. For improved accessibility: Unfasten the AC input plate using the 6 screws [T_30]
2. Loosen the cable gland for the AC connection and PE grounding (Ground) [W_46].
3. Remove the sealing plugs.
4. Insert the AC cables through the cable glands.
5. Strip the AC cables.
6. Strip the individual wires for L1 / L2 / L3 (ABC) and PE (Ground), so that the strands and insulation can be pressed into the cable lug sleeve.

. **CAUTION! Risk of fire due to chemical corrosion. Cable lugs must be suitable for the conductor material and copper busbars being used.** [6]

7. Press the cable lug.
8. Slide heat-shrink tubing (not included) over the AC cable's ring cable lug sleeve.

. Fasten the input plate using the 6 screws [T_30 / 6 Nm
NOTE: When using metal screw connections, toothed discs must be placed underneath to create an enclosure earthing.

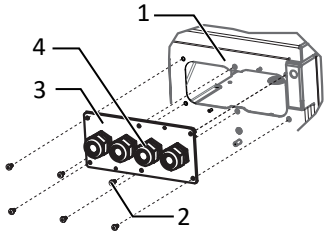

Fig. 24: Removing the AC input plate

1 Housing base – AC-side
2 Screws for mounting
3 Input plate
4 Cable fitting

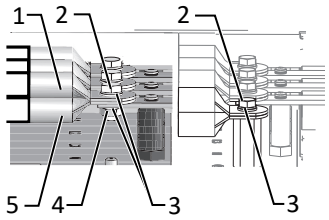

Fig. 25: Prepare AC connection

1 Ring cable lug (top)
2 Screw
3 spring washer
4 Nut
5 Ring cable lug (bottom)

7.5.2 Making the grid connection

↻ **4-pole connection, TN, TT system** connection is prepared.

1. Loosen nut and lock washer at the marked grounding point.
2. Lay the grounding cable onto the grounding point. Secure it with the nut and lock washer provided [W_17 / 10 Nm]. [7]
3. Place the cable lug of cores L1 / L2 / L3 on the busbar in accordance with the labeling and secure it with a nut, screw and lock washer (fastening elements in scope of supply) [W_17 / 30 Nm].
4. Check secure fit of all connected cables.
5. Tighten AC cable fittings [W_46 / 10 Nm].

⇨ The device is connected to the power grid.

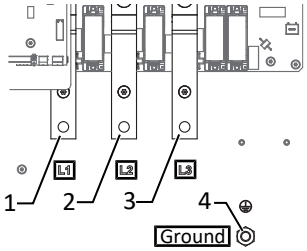

Fig. 26: 4-Pole AC grid connection

1 L1 busbar
2 L2 busbar
3 L3 busbar
4 Ground - earthing point

[6] When using aluminium cable lugs we recommend using cable lugs with galvanic tin plating or, alternatively, AL/CU cable lugs with suitable AL/CU washers. Otherwise, the aluminium may be destroyed by the copper busbars in the presence of electrolytes (e.g. condensate).

[7] If the connection is made in a TN-C grid, connect the PEN grounding cable to the ground earthing point.

EN

Residual current monitoring unit (RCMU):

The device is equipped with an AC/DC-sensitive residual current monitoring unit in accordance with IEC/EN 62109-2 and VDE 0126-1. The AC/DC-sensitive residual current monitoring unit monitors AC and DC residual currents and redundantly disconnects the device from the grid in the event of residual current jumps of > 30 mA. In the event of a malfunction in the residual current monitoring unit, all poles of the device are immediately disconnected from the public grid. The functionality of the integrated RCMU is described in the document 'RCMU functionality +device type' on our website.
If local regulations require an external residual current circuit breaker (RCD), the recommendations in the document "Confirmation of compatibility with residual current circuit breakers (RCD)" on our website must be observed.

NOTE

Earthing recommendation

Observe the general earthing recommendation of the existing mains system.

NOTE

Selection of the residual current circuit breaker

If an external residual current circuit breaker is necessary due to the installation specification, a type A residual current circuit breaker must be used.

If the type A is used, the insulation threshold must be set to greater than/equal to (≥) 200 kOhm in the "DC parameters" menu [see [See section 9.4.2 Page 50]].

For questions regarding the appropriate type, please contact the installer or our KACO new energy customer service.

7.6 Connecting the PV generator to the device

The DC connection is intended exclusively for PV generators. Other sources fall within the scope of improper operation (e.g. batteries).

7.6.1 Checking the PV generator for a ground fault

⚠ DANGER

Risk of fatal injury due to electric shock!

Severe injury or death will result if the live connections are touched. When there is solar radiation on the PV generator, DC voltage will be present at the open ends of the DC cables.

1. Activate the connection power at the switchbox or string combiner with the DC isolator switch.
2. The DC connection is intended exclusively for PV generators. Other sources fall within the scope of improper operation (e.g. batteries).
3. Only touch the PV generator cables on the insulation. Do not touch the exposed ends of the cables.
4. Avoid short circuits.
5. Do not connect any strings with a ground fault to the device.
6. The device must not be operated with negatively or positively earthed PV modules.

Ensuring that there is no ground fault

1. Measure the DC voltage between the protective earth (PE) and the positive cable of the PV generator.
2. Measure the DC voltage between the protective earth (PE) and the negative cable of the PV generator.
   ⇨ If stable voltages can be measured, there is a ground fault in the DC generator or its wiring. The ratio between the measured voltages gives an indication as to the location of this error.
3. Rectify any faults before taking further measurements.
4. Measure the electrical resistance between the protective earth (PE) and the positive cable of the PV generator.
5. Measure the electrical resistance between the protective earth (PE) and the negative cable of the PV generator.
   ⇨ In addition, ensure that the PV generator has a total insulation resistance of more than 2.0 MOhm, since the device will not feed in if the insulation resistance is too low.
6. Rectify any faults before connecting the DC generator.

EN

7.6.2 Configuring the PV generator

⚠ CAUTION

Damage to components due to faulty configuration

In the expected temperature range of the PV generator the values for the no-load-voltage and the short circuit current must never exceed the values for U_{DCMAX} and I_{SCMAX} in accordance with the technical data.

1. Observe limit values in accordance with the technical data.

NOTE

Dimensioning the PV generator

The device is designed with a reserve of DC short-circuit current resistance. This allows for oversizing of the connected PV generator. The absolute limit for the PV generator is the value of the max. short-circuit current ($ISC_{max.}$) and the max. no-load voltage ($U_{DCmax.}$). See footnote under [See section 4.1 Page 12]

7.6.3 Connecting the PV generator

⚠ DANGER

Risk of fatal injury due to electric shock!

Severe injury or death will result if the live connections are touched. When there is solar radiation on the PV generator, DC voltage will be present at the open ends of the DC cables.

1. Activate the connection power at the switchbox or string combiner with the DC isolator switch.
2. The DC connection is intended exclusively for PV generators. Other sources fall within the scope of improper operation (e.g. batteries).
3. Only touch the PV generator cables on the insulation. Do not touch the exposed ends of the cables.
4. Avoid short circuits.
5. Do not connect any strings with a ground fault to the device.
6. The device must not be operated with negatively or positively earthed PV modules.

NOTE

Type and configuration of the PV modules

Connected PV modules must be dimensioned for the DC system voltage in accordance with IEC 61730 Class A, but at least for the value of the AC grid voltage

NOTE

Use of suitable cable lug sizes

Devices with DC switch have a limited connection space ([See section 7.3 Page 23]) The maximum cable lug length of 96 mm extends into the cable gland to ensure proper function and use [See figure 28 [Page 28].

⚠ WARNING

IP66 (IEC 60529) not guaranteed!

Ingress of condensation, dust or vermin can lead to short-circuiting/overheating or even failure of the device.

1. Tighten **all** cable/sealing plug/housing screw connections to the **specified torques**.
2. If cable glands are not used, the sealing plugs must be retained with the specified torques.

EN

↻ Time required for DC connection: 15 min
↻ PV generator checked for a ground fault.
↻ DC cable with 2 x 1 or 2 x 2 strands already on the device.
↻ DC polarity checked before connection made to device.

1. Disconnect the connection line from the switch box or string combiner via the DC isolator switch.
2. For improved accessibility: Unfasten the DC input plate using the 4 screws [T_30].
3. Unfasten the cable fitting for the DC connection [W_46]
4. Remove the sealing plug in the cable fitting used.
5. Remove the outer cladding of the DC cables and insert them through the cable fitting.
6. Strip the insulation from DC cables according to M10 ring cable lug so that the strand and insulation can be pressed into the cable lug shaft.

. **CAUTION! Risk of fire due to chemical corrosion. Cable lugs must be suitable for the conductor material and copper busbars being used** [8].

. **WARNING! Risk of short circuit due to incorrect size of the cable lug! Observe the dimensions for the selection.** [See figure 28 [▶ Page 28]

7. Press ring cable lug onto DC wires. When crimping, ensure that the ring cable lug is rotated in accordance with the final installation position.

. **CAUTION! Use a shrink tubing (>= 6 kV/mm dielectric strength), as the clearance is insufficient. This prevents a surge in voltage.**

8. Guide the shrink tubing over the uninsulated crimping point and a maximum of 20 $^{+0/-2}$ mm over the cable insulation and shrink-fit using manual shrink-fitting equipment.

. Secure the input plate using the 4 screws [T_30 / 6 Nm]
NOTE: When using metal screw connections, toothed discs must be placed underneath to create an enclosure earthing.

⇨ DC cable configured. Continue with the connection to the DC filter or DC switch.

Connecting the DC cable to the DC filter

↻ DC cables equipped with a ring cable lug [max width 42 mm].

1. Place the cable lug of cores DC- and DC+ on the busbar in accordance with the labeling and secure it with a nut, screw and lock washer (fastening elements in scope of supply) [W_17 / 30 Nm].
2. Check that the connected cables are fitted securely.
3. Tighten the cable fittings [W_46 / 10 Nm].

⇨ The device is connected to the PV generator.

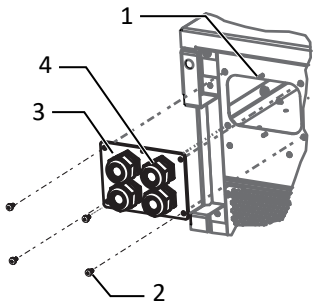

Fig. 27: Removing the DC input plate

1 Housing base – DC side
2 Screws for mounting
3 Input plate
4 Cable fitting

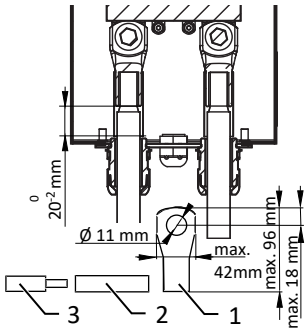

Fig. 28: Configuring the DC cable

1 Cable lug
2 Shrink tubing*
3 DC cable

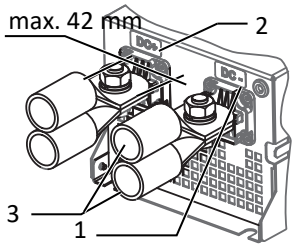

Fig. 29: DC connection with 2 DC +/- inputs

1 DC- busbar
2 DC+ busbar
3 Cable lug (optionally with 2 DC +/- inputs)

[8] When using aluminium cable lugs we recommend using cable lugs with galvanic tin plating or, alternatively, AL/CU cable lugs with suitable AL/CU washers. Otherwise, the aluminium may be destroyed by the copper busbars in the presence of electrolytes (e.g. condensate).

EN

Connecting the DC cable to the DC switch

1. For mounting the DC cables, use a torque wrench and the open-end wrench included in the scope of delivery for counterholding.
2. Pre-fit DC cable pair with the pre-installed screw and counternut onto the DC+ and DC busbar of the DC switch.
3. **Option for 2 cable pairs**: Insert spacer sleeve between 2 DC cables and pre-assemble in pairs with the provided screw and counternut onto the DC+ and DC busbar of the DC switch.
4. Slide the DC input plate up onto the housing base and secure. [T_30 / 6 Nm]
5. Secure the screws and counternuts onto the DC+ and DC busbar of the DC switch. [W_16/17] / 30 Nm]
6. Tighten the cable screw fitting. [W_46 / 10 Nm]

⇨ The device is connected to the PV generator.

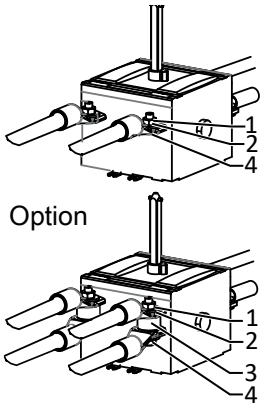

Fig. 30: Fit DC cables to switch

1	Nut
2	Lock washer
3	Spacer sleeve
4	Fixing screw

7.7 Inserting the overvoltage protection

AC overvoltage protection

↻ Absence of AC/DC voltage ensured and device open [[See section 7.2 Page 23]].

↻ On initial delivery, remove intermediate plug-in frame on the AC surge protection device.

☞ Position and secure intermediate plug-in frame onto AC surge protection socket.

NOTE: Different AC surge protection modules are used. The designation on the PCB must match the module code (GTD/MOV).

1. Insert AC surge protection modules individually into the AC surge protection socket.[See installation instructions in the [See section 4.4 Page 16] package.
2. Ensure that all protective elements are properly secured.
3. Remove SPD monitoring jumper for automatic monitoring.

⇨ Proceed with the installation of the device.

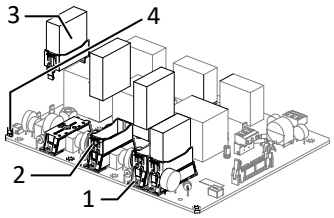

Fig. 31: Upgrading the AC surge protection

1	AC surge protection socket
2	AC intermediate plug-in frame
3	AC surge protection module (4 slots)
4	SPD monitoring jumper

DC overvoltage protection

↻ **NOTE: Absence of AC/DC voltage ensured.**

. **NOTE: The coding at the base plug-in position must match the coding on the module.**

1. Insert the DC overvoltage protection modules into the DC base one after another. [See installation instructions in the [See section 4.4 Page 16] package]
2. Secure new modules using the locking latch.
3. Remove SPD monitoring jumper for automatic monitoring.
4. Ensure that all protective elements are properly secured.

⇨ Proceed with the installation of the device.

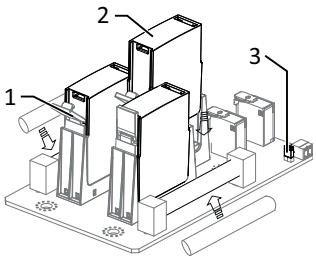

Fig. 32: Inserting overvoltage modules

1	DC base
2	DC overvoltage protection module (3 slots)
3	Jumper

EN

Install RS485 surge protection

↻ Ensure that the device is completely free of AC/DC voltage.

↻ Device open [[See section 7.2 Page 23]].

. **NOTE: Clamp RS485 base element for surge protection at the intended position in accordance with the drawing onto the top hat rail from bottom to top.**

1. The following colour coding must be observed for the internal/external RS485 cable:
   Data A => white (WH); Data B => blue (BU); GND => violet (VT)
2. The internal RS485 cable is to be connected to the overvoltage socket on the socket. [See installation instructions in the [See section 4.4 Page 16] package]

. **NOTE: For inlet/outlet on the RS485 externally, the surge protection socket outlet is to be assigned twice.**

3. Insert RS485 cable through the interface cable fitting and into the connection area.
4. Strip the RS485 cable [approx. 20 mm] and remove the insulation from the individual wires [8 mm].
5. Fit wire end sleeves onto the wires and connect them to the RS485 base element in accordance with the wiring diagram [S_M3 / 0,5 Nm].
6. Connect output line with RS485 plug (included with the surge protection kit equipment) to the RS485 base element and insert the RS485 plug into the RS485 socket on the communication circuit board.
7. Fix output line to the cable guide.
8. Insert RS485 surge protection module into base.
9. Ensure that the protective elements are properly secured.

⇨ Proceed with the installation of the protective elements.

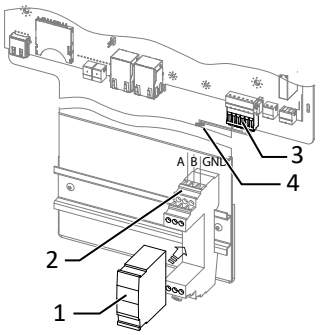

Fig. 33: Inserting the RS485 overvoltage protection

1 RS485 overvoltage protection module (optional)
2 RS485 overvoltage protection base assembly on top-hat rail
3 RS485 communication connector
4 Cable guide

Installing the Ethernet surge protection

↻ It has been ensured that there is no AC/DC voltage present.

1. Clamp Ethernet overvoltage protection module on the top hat rail from top to bottom.
2. Connect the short Ethernet cable with an Ethernet port on the communication board. [See installation instructions in the [See section 4.4 Page 16] package.
3. Insert Ethernet cable through the corresponding cable fitting and insert into overvoltage protection module.

⇨ Proceed with the installation of the device.

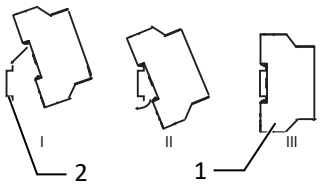

Fig. 34: Inserting the Ethernet overvoltage protection

1 Ethernet overvoltage protection module (optional)
2 Top hat rail

7.8 Establishing equipotential bonding

NOTE

Use of the housing earthing

Depending on the local installation specifications, it may be necessary to earth the device with a second earthing connection. To this end, the threaded bolt on the underside of the device can be used.

↻ The device has been installed on the mount.

1. Strip the insulation from the equipotential bonding cable.
2. Furnish the stripped cable with an M8 ring cable lug.
3. Lay the cable for equipotential bonding onto the grounding point and attach with an additional M8 nut and lock washer [W_13/ 10 Nm].
4. Check that the connected cable is fitted securely.

⇨ The housing is included in the equipotential bonding.

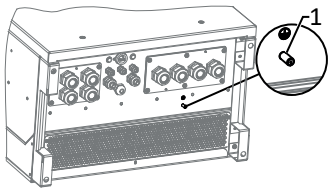

Fig. 35: Additional earthing point

1 Earthing bolt

EN

7.9 Connecting the interfaces

7.9.1 Overview

⚠ DANGER

Risk of fatal injury due to electric shock!

Severe injuries or death may result from improper use of the interface connections and failure to observe protection class III.

1. The SELV circuits (SELV: safety extra low voltage) can only be connected to other SELV circuits with protection class III.

⚠ CAUTION

Damage to the device from electrostatic discharge

Components inside the device can be damaged beyond repair by static discharge.

1. Observe the ESD protective measures.
2. Earth yourself before touching a component by touching a grounded object.

All interfaces are located on the communication circuit board (HMI board) inside the housing.

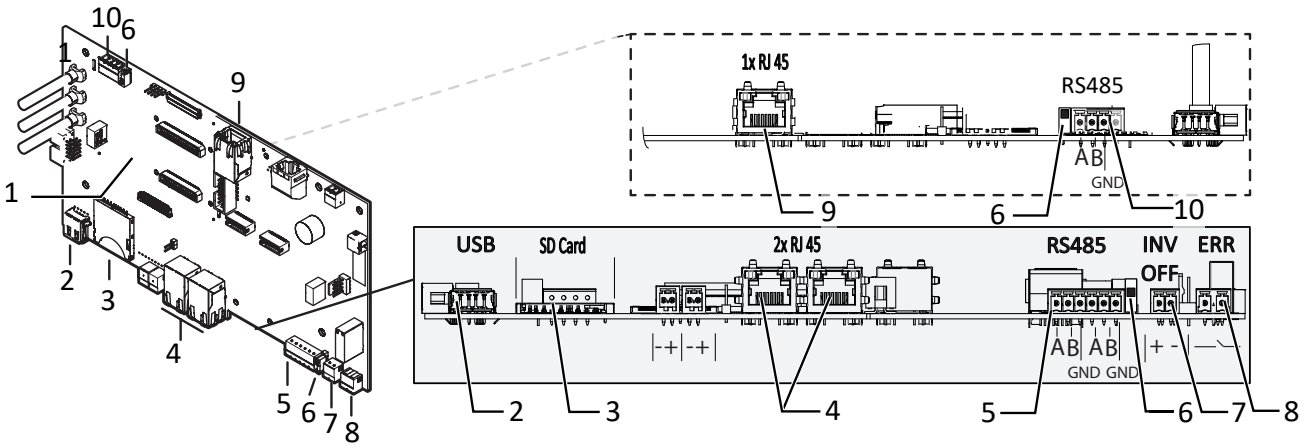

Fig. 36: Communication circuit board (HMI board)

1	Communication circuit board	6	DIP switch – Activate terminating resistor (2x)
2	USB socket	7	INV OFF – connection for external grid protection component – 24 V (+/-20%) / 1 A (at least 15 mA)
3	SD slot	8	ERR – fault signal relay
4	Ethernet for network connection DHCP	9	Ethernet – only for starting up by means of static IP ([See section 8.4.2 Page 39])
5	RS485 – standard	10	RS485 – connection for string combiner (CON 200)

⚠ WARNING

IP66 (IEC 60529) not guaranteed!

Ingress of condensation, dust, or insects/small animals may cause short circuits/overheating and lead to device failure.

1. Tighten **all** cable glands, blanking plugs, and enclosure fasteners to the **specified torque values**.
2. If cable entries are not used, keep the blanking plugs installed and tightened to the specified torque.

EN

7.9.2 Inserting and laying the cables

↻ Time required for connecting the interface cables: 10 min

1. Observe the instructions on the recommended cable for the interface used.
2. Unfasten the cover on the cable fitting [🔧W_20].
3. Feed the signal cable into the connection area.

⇨ Signal cable inserted.

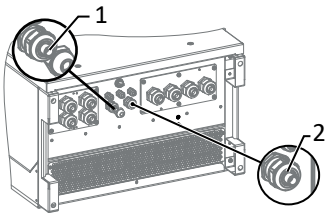

Fig. 37: Insert signal cables

1 Cable fitting for feeding in the Ethernet cable
2 Cable fitting for feeding in the signal cable

Inserting the Ethernet cable

1. Unfasten and remove the cover on the cable fitting [🔧W_29].
2. Remove the sealing insert.
3. Pass the connection cable through the cover of the cable fitting and the sealing insert.
4. Insert the sealing insert into the cable fitting.
5. Feed the connection cables into the connection area.

⇨ Ethernet cable inserted.

Shield the Ethernet cable

1. Check the cables (1) for freedom from tension and compression.
2. Mark the shield contact position on the designated shield clip (2).
3. Pull out the cables and strip to the marked position (approx. 10 mm) to expose the braid.
4. Insert the cables and snap them onto the shield contact/clip.

⇨ Shielding completed. Proceed with the connection.

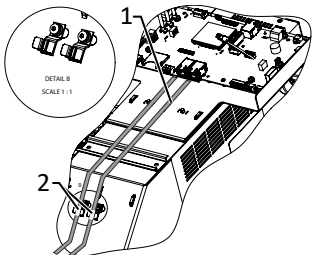

Fig. 38: Shield the Ethernet cable at the EMC clamp.

1 Ethernet cable
2 EMC clamps

7.9.3 Making the Ethernet connection

NOTE

Feed-in of the communication line

The connection plug of an RJ45 cable is larger than the opening of an M25 cable fitting when it is installed. For this reason, remove the sealing insert before installation and thread the Ethernet cable outside of the cable fitting through the sealing insert.

NOTE

Note the type of network cable

Use a suitable category 6 network cable. The maximum distance between two devices is 100 m (328 ft). The Ethernet switch allows for the repeater function and supports auto-sensing. Ensure that the cable is correctly assigned. You can use both crossed and 1:1 protectively-wired Ethernet connection cables.

↻ Connecting cable inside the device.

1. Plug in an Ethernet cable at one of the two Ethernet ports on the communication circuit board.
2. Check that the connecting cable is fitted securely.

⇨ Connect additional signal cables.

Connecting the device to the network

↻ Ethernet cable connected to the device.

1. Connect the Ethernet cable to the network or a computer.
2. Configure the Ethernet settings and the web server in the Settings menu.

EN

7.9.4 Connecting the RS485 bus

NOTE

Observe line polarity

Ensure that the DATA+ and DATA- wires are properly connected. Communication is not possible if the wires are reversed. Different manufacturers do not always interpret the standard on which the RS485 protocol is based in the same way. Note that the wire designations (DATA+ and DATA-) for wires A and B may vary from one manufacturer to another.

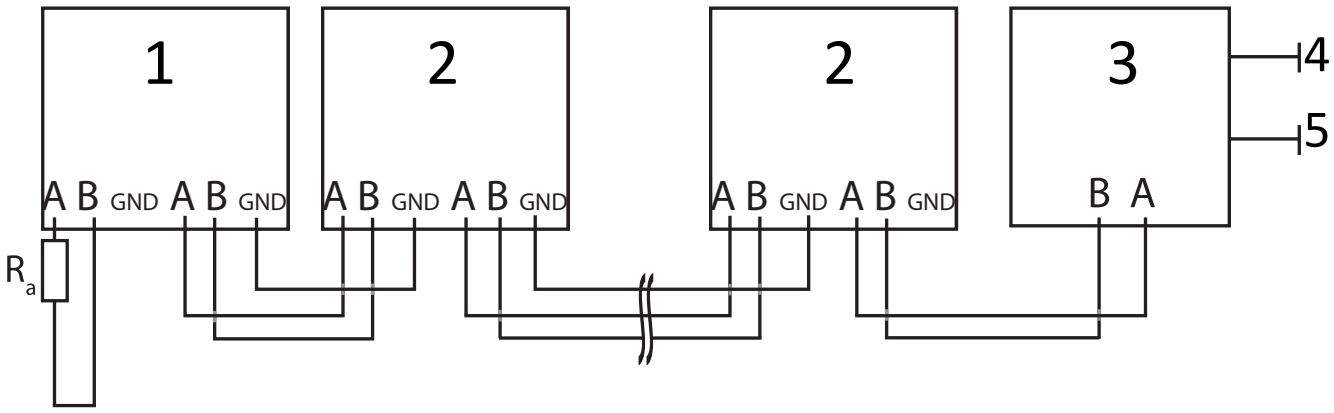

Fig. 39: RS485 interface wiring diagram

1 Inverter, terminal unit	4 Communication
2 Inverter	5 Power supply
3 Data monitoring unit	

Properties of the RS485 data line	
Maximum length of the RS485 bus line	Max. 1200 m This length can be reached only under optimum conditions. Cable lengths exceeding 500 m generally require a repeater or a hub.
Maximum number of connected bus devices	99 devices + 1 data monitoring unit
Data line	Twisted, shielded.
Recommendation	Li2YCYv (twisted pair) black for laying cable outside and in the ground, 2 x 2 x 0.5 mm²
	Li2YCY (twisted pair) grey for dry and damp indoor spaces, 2 x 2 x 0.5 mm²

↻ To prevent interference during data transmission:
- Observe the wire pairing when connecting DATA+ and DATA-.
Do not lay RS485 bus lines in the vicinity of live DC/AC cables.

1. Loosen the cable fitting [W_20]
2. Thread the connection cables through the cable fitting.
3. To connect the shield, strip the RS485 data cable from the position of the shield terminal to the wire mesh (approx. 20 mm).
4. Connect the connection cables to the corresponding connection terminals.
5. The following must be connected to all inverters and to the data monitor unit in the same way:
   - Wire A (-) to wire A (-) and wire B (+) to wire B (+)
   - GND to GND
6. Tighten cable fittings [W_20 / 1,5 Nm].

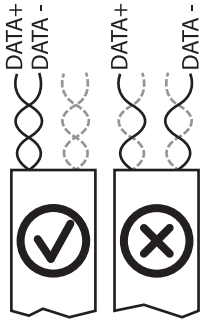

Fig. 40: Assignment of twisted-pair wires

EN

NOTE

Configuration of the RS485 bus devices

When using the RS485 bus system, assign a unique address to every bus device (inverter, sensor) and terminate the terminal units (see the "Settings" menu) .

↻ Check whether one of the devices represents the terminal unit.

☞ Only activate the terminating resistor on the communication circuit board of the terminal unit using the DIP switch.

⇨ RS485 connection made. Lay signal cable correctly.

7.9.5 Connecting the fault signal relay

The contact is designed as an N/O contact and is labelled "ERR" or "Relay" on the circuit board.

Maximum contact load
DC 30 V/1 A

↻ Connection area cover open.

1. Loosen the cable fitting to pass the signal cable through [W_20]
2. Thread the connection cables through the cable fitting.
3. Attach the connection cables to the terminals. [See section 7.9.1 Page 31]
4. Tighten cable fitting [W_20 / 1,5 Nm].

7.9.6 Connecting external grid protection components

Connect Powador-protect

(only for 380/400 V blueplanet 87.0TL3 / 92.0TL3 / 105TL3 / 100 NX3 / 125 NX3)

↻ The cable to the external grid protection device is available on the device.

↻ Cover of the device has been opened.

1. Undo the cable fittings [W_20]
2. Pass the connection cable through the cable fittings.
3. Connect wire A (+) to the terminal marked "INV OFF+" on the first device via the "DO1" terminal of the protective device.
4. Connect wire B (-) to the terminal marked "INV OFF-" on the first device via the "GND" terminal of the protective device.
5. Connect the other devices to one another as follows:
   - wire A (+) to wire A (+) and wire B (-) to wire B (-).
6. Tighten cable fitting [W_20 / 1,5 Nm]
7. After commissioning: Configure the `external` Overvoltage protection Powador-protect in the menu entry Features / Functions.

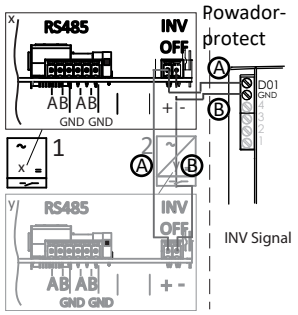

Fig. 41: Connecting the device to Powador-protect

Connecting the external device

NOTE: When an external device is used, a separate power supply is also required for this purpose. Some external devices only have a normally closed contact and do not supply any voltage.

↻ The cable to the external grid protection device is available on the device.

↻ An external power supply is available at the grid protection device.

↻ Cover of the device has been opened.

1. Undo the cable fittings [W_20]
2. Pass the connection cable through the cable fittings.
3. Connect the corresponding output of the external N/A protection to "INV_OFF+", follow the operating instructions for the external device.
4. Connect the corresponding output of the external N/A protection to "INV_OFF"-, -", follow the operating instructions for the external device.
5. Connect the other devices to one another as follows:
   - wire A (+) to wire A (+) and wire B (-) to wire B (-).
6. After commissioning: Configure the `external` device Overvoltage protection in the menu entry Features / Functions.

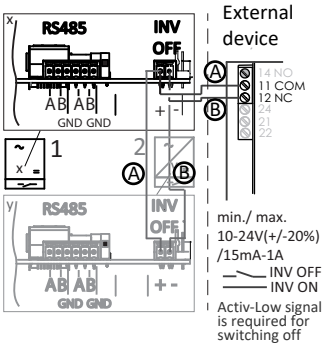

Fig. 42: Connecting the device to the external grid protection device

EN

7.10 Sealing the connection area

↻ Grid connection is prepared.

1. Lift the housing cover onto the housing and loosely tighten the fastening screws.
2. Secure the housing cover (1) by tightening all 6 screws (2) in a diagonally opposite sequence [T_25 / 5 Nm].

⇨ The device has been mounted and installed.

⇨ Put the device into operation.

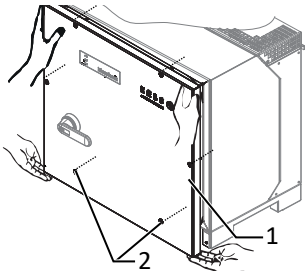

Fig. 43: Closing the housing cover

EN

8 Commissioning

8.1 Requirements

⚠ DANGER

Lethal voltages are still present in the connections and cables of the device even after the device has been switched off and disconnected!

Severe injuries or death may occur if the cables and/or terminals/busbars in the device are touched.

1. The device is only permitted to be commissioned by a qualified professional.
2. Unauthorised persons must be kept away from the device.

↻ The device has been mounted and electrically installed.
↻ The PV generator supplies a voltage above the configured start voltage.

1. Connect the grid voltage using the external circuit breakers.
2. Connect the PV generator using the DC isolator switch (0 > 1)

⇨ The device begins operation.

⇨ During initial start-up: Follow the instructions of the New Connection Wizard.

NOTE

Required WiFi-capable device

A mobile device with WiFi interface is required for commissioning the device.

The following functions are only available via the web interface.:

1. Initial commissioning
2. Parameterization
3. Reset to factory settings.

NOTE

Use of a suitable web browser

We recommend using an up-to-date Firefox or Chrome browser or the default browser that is available on the mobile terminal devices to configure the device via the web interface.

8.2 Preconditions relating to standards

Attachment of safety label in accordance with UTE C15-712-1

The code of practice UTE C15-712-1 requires that, upon connection to the French low-voltage distribution network, a safety sticker showing a warning to isolate both power sources when working on the device must be attached to each device.

☞ Attach the provided safety sticker to the outside of the device housing where it is clearly visible.

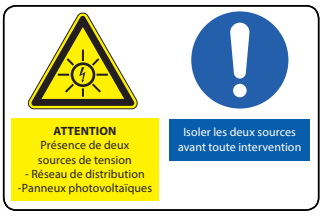

Fig. 44: Adhesive label UTE_C15-712-1

Attach the DRM 0 safety label

According to AS/NZS 4777.2:2015, in Australia PV devices are marked that support the "Mode 0" remote control command.

1. Attach the supplied safety sticker next to the name plate on the device housing where it is clearly visible.
2. Please note the Powador-protect application note in the download area on our homepage. Here you will find the corresponding "Demand Response Modes" listed in the chapter "Referencing for power control".

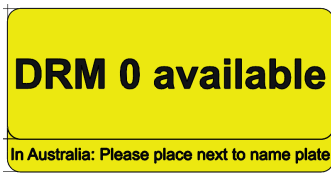

Fig. 45: Safety label DRM 0 for Australia

EN

8.3 Network topologies

Plant segmentation

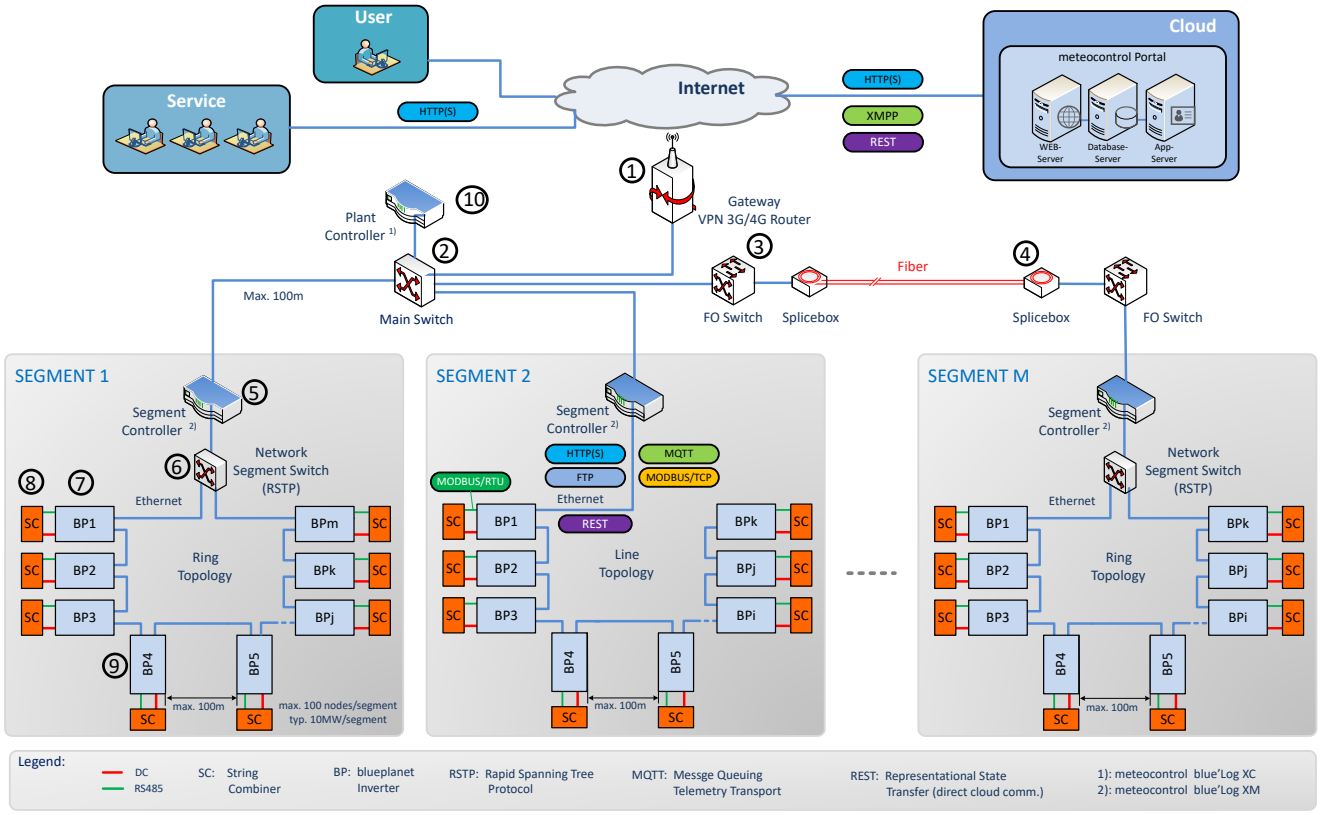

Fig. 46: Segmentation of a plant

1	Gateway VPN 3G/4G Router	6	Network Segment Switch
2	Main network switch	7	Inverter
3	FO – Switch (Fiber Optic)	8	String combiner
4	Slicebox (for Fiber Optic Data transfer)	9	Connection cable and protocol -DC / Modbus RTU / RS485
5	Segment Controller	10	Plant Controller

NOTE

Protection of your system against cyberattacks

The internet and communication systems, which **fall outside** the scope of KACO, must incorporate **comprehensive protection measures**, such as **VPNs**, but not limited to these, and adhere to the most current cybersecurity best practices to ensure the security of the facilities.

While a gateway to the Internet, a data logger and an instance for higher-level power control are usually sufficient for smaller systems, larger systems must be divided into separate network segments, as there are certain upper limits regarding the number of nodes that can be managed for monitoring/control.

This illustration shows a possible variant for multiple segments. Depending on the local conditions, a different positioning of the components may also be preferable (e.g. position `Segment Controller` at a central location and connect in the segment switch via glass fibre cable).

Located directly after the Gateway VPN-Router, is the `Main network switch` via which the `Segment Controller` is connected in. With the corresponding system size (distance from `Main network switch` to the `Segment Controller` >100m) it may also be necessary to connect in segments that are further away via a glass fibre connection.

Within a segment, it is possible to link KACO devices to one another as part of an Ethernet daisy-chain by way of an integrated switch, whereby the Segment Controller is connected at the first element in the chain. For this purposes of an example, this topology is shown in segment 2. A `Segment Controller` an manage up to 100 nodes. A node in this sense is any data source that is monitored by the `Segment Controller` .

EN

(Example: 45 pairs consisting of inverter and string combiner (90 nodes) + 10 reserve nodes for other substation/segment data sources)

If additional failure safety is desirable, the KACO devices can also be arranged in a ring via a correspondingly configured Network Segment Switch (that supports the Rapid Spanning Tree Protocol "RSTP"). This switch is then also coupled to the Segment Controller. This configuration is shown as an example in segments 1 and M.

As can be seen in the figure, a String combiner is assigned to each KACO device. In terms of communication, these are coupled in directly to the device via an RS485 cable (green cable – note connection port in [See section 7.9.1 Page 31]. To this end, MODBUS RTU is used as a communication protocol.

The monitoring of the string combiner is also carried out via the Segment Controller, whereby the KACO device undertakes the role of a MODBUS gateway. The string combiner must be coupled using a DC-Combiner. There is no restriction as the compatibility depends on the selected segment controller and string combiner. (e.g. blue'Log is compatible with Weidemüller DC-Combiner)

When using a blue'Log device, the only 3rd party String-Combiner device currently available, which can also be addressed in this manner via the segment controller , comes from "Kernel Sistemi".

Depending on the network load, the device can support up to 10 Modbus clients.

8.4 Start-up options

Option 1: Local, guided start-up by means of WIFI	– Installation technician connects to a KACO inverter via WIFI. – Installation wizard carries out start-up steps interactively.
Option 2: Local, guided start-up by means of LAN connection	– Installation technician connects to a KACO inverter via LAN. – Installation wizard carries out start-up steps interactively.
Option 3: Local start-up with pre-arranged configuration	– Installation technician uses a USB memory stick that contains a pre-prepared device configuration. – The device imports these settings and is then ready for operation.
Option 4: Start-up in a network without Segment Controller	– Start-up in an existing network. – The installation technician can start up the device with the aid of the installation wizard as described at option 1. The device can be addressed using its host name.
Option 5: Centralised start-up via Segment Controller	– A device configuration that is available on the Segment Controller can be uploaded to several KACO inverters. – The devices are ready for operation once the configuration is activated.

Tab. 3: Start-up variants for individual devices or system segments

8.4.1 Start-up via WIFI

To start up the device directly, the first option is to carry out the installation interactively with a WIFI-compatible adapter approved by KACO. If such an adapter is not available, the other option is to perform an automatic configuration using a USB memory stick.

The following figure provides an example of the structure of a KACO device with string combiner (SC) and mobile devices connected without cables.

The following figure provides an example of the structure of a KACO device with wirelessly connected mobile devices.

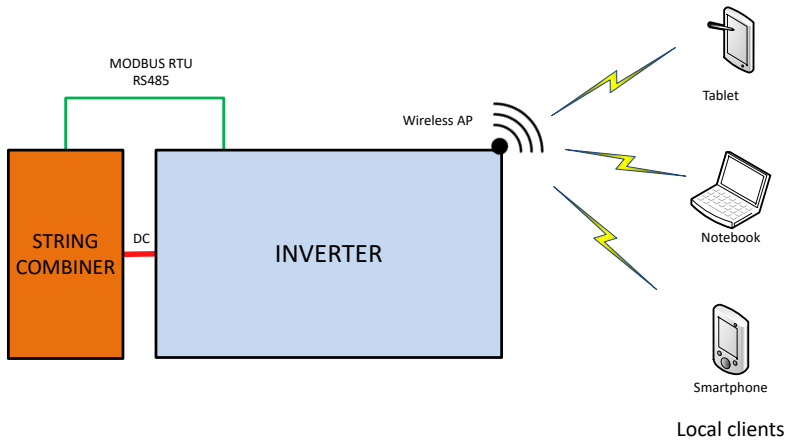

Fig. 47: Start-up via a direct WiFi connection

Application

The planned network infrastructure or AC-coupling is not yet in place or has not been completed.

A DC supply to the KACO device is sufficient for start-up.

Required components

- WiFi-compatible notebook, tablet or smartphone (Android or iOS devices can be used).
- USB WiFi stick (KACO accessory, type: WLAN adapter Digitus 150 N micro article no.: 3013222)

Establishing a connection to the KACO device via WiFi

☞ Connect the USB WiFi stick to the device and connect to the access point generated by the device using a notebook or mobile device. The WIFI SSID corresponds to the serial number of the device, which is printed on the type plate.

☞ Name of access point: <Device designation serial number> (e.g. “bp87-<serial number>” or “bp150-<serial number>”)

1. Password: kacowifi
2. Launch the browser on the terminal device and enter server name a) or server address b):

☞ http:// 192.168.1.1

☞ Confirm entry.

⇨ The device configuration page is displayed.

1. At the Login/register icon, log in as:
2. User name: user
3. Password: kaco user
4. Assign a new user name and password.

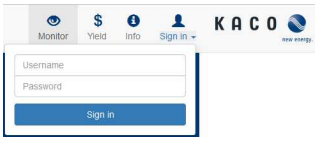

Fig. 48: Login screen

8.4.2 Start-up via LAN connection

The following figure provides an example of the structure of a KACO device with string combiner (SC) and mobile devices connected directly via Ethernet.

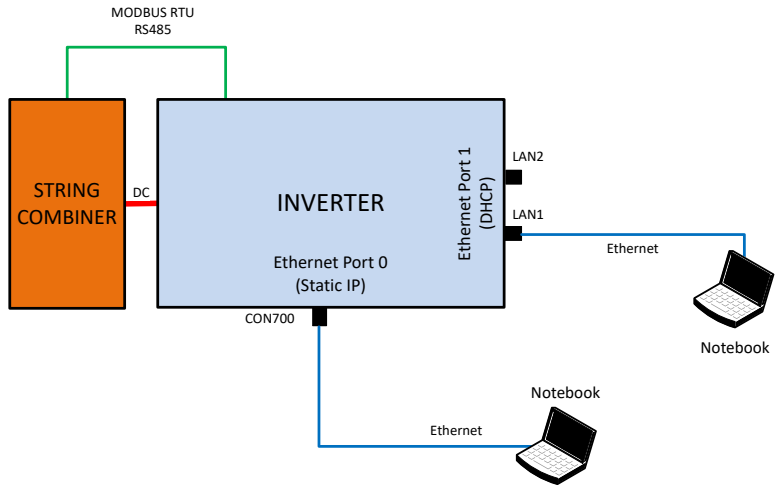

Fig. 49: Start-up via Ethernet

Application

The planned network infrastructure or AC-coupling is not yet in place or has not been completed.

A DC supply to the KACO device is sufficient for start-up.

Required components

– Notebook with Ethernet interface

– Ethernet cable (uncrossed patch cable)

Establishing a connection to the KACO device

1. The device must be opened in order to connect the Ethernet cable! For safety reasons, KACO therefore recommends establishing a connection via WiFi.
2. The device's communication circuit board has 3 Ethernet ports that can be used:

– The 2 neighboring shielded Ethernet ports are marked LAN1 and LAN2. These ports have an internal switch and, in their factory default state, they expect to receive an IP address from a DHCP server. As such, these can only be used if the connected PC makes a DHCP service available.

– The port marked CON700 that can be used to speak to the device using the static IP address 169.254.1.1. This option is preferable if you have decided to go with a wired solution.

. **NOTE: Please do not under any circumstances connect the Ethernet cable to the unshielded RJ45 slot marked J200 as this typically causes damage to the printed circuit board!**

1. Launch the browser on the terminal device and enter the IP address of the device:
2. http://<Geräte-IP-Adresse> (if ports LAN1 or LAN2 have been used)
3. http://169.254.1.1 (if the port marked CON700 has been used)

⇨ The device configuration page is displayed.

8.4.3 Start-up via a USB memory stick

Application

The installation technician has saved a pre-prepared device configuration on a USB memory stick (e.g. a configuration that he has uploaded during the guided installation of a device or one that has been given to him by a third party).

Required components

– USB memory stick with pre-prepared start-up configuration file.

Procedure

1. Connect the USB memory stick to the USB slot on the underside of the device.

   ⇨ The device checks the saved configuration and emits a flash code via the LEDs on the front of the device which allows conclusions to be drawn about the validity of the configuration ([See section 9.2 Page 44]).

2. If the configuration is valid, the parameters are transferred.

⇨ Once the parameters have been adopted and the device has been restarted, the device is put into operation.

EN

8.4.4 Starting up a network

The following illustration provides an example of the structure of a KACO unit with a string collector (SC) and an external network connection.

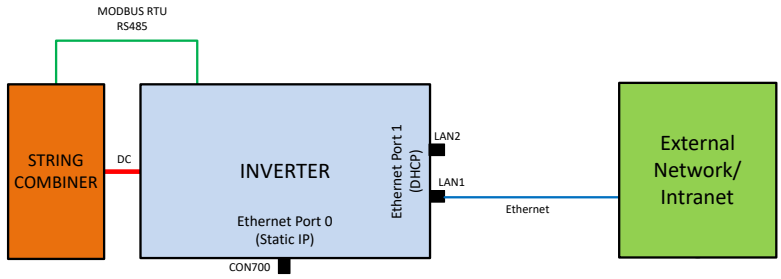

Fig. 50: Start-up via a network without Segment Controller

Application

If the device is to be integrated into an existing network, then the configuration shown in the figure should be used. It is immaterial whether port LAN1 or LAN2 is used.

Required components

- A notebook that is logged into the external network.
- Ethernet cable (uncrossed patch cable)

The device can also be operated without an external Segment Controller or data logger. In this case however, the internal logging options are limited and log data are only available for a certain period of time.

Establishing a connection to the KACO device

1. The device must be opened in order to connect the Ethernet cable! The device has 3 Ethernet ports that can be used. These are located on the printed-circuit board marked In this application only one of the 2 neighbouring shielded Ethernet ports (marked LAN1 and LAN2) should be used. These ports have an internal switch and, in their factory default state, they expect to receive an IP address from a DHCP server.

. **NOTE: Please do not under any circumstances connect the Ethernet cable to the unshielded RJ45 slot marked J200 as this typically causes damage to the printed circuit board!**

2. Use a functioning Ethernet slot on the external network end.
3. It may be necessary to take additional IT configuration measures in the external network so that the device is assigned an IP address.
4. Next, launch the browser on the terminal device and enter the IP address of the device:

   ⇨ http://<Device-IP-Adress>

   ⇨ The IP address can either be requested from the network administrator or determined using an IP scanner tool.
5. There is also the option of addressing the device using its host name. In its factory default state, the host name consists of a combination of the device derivative designation and the serial number, as shown below:
   <Device designation serial number>, for example:

↻ http://bp125-125TL01234567 *or* http://bp87-87-0TL01234567 [9]

☞ If this is unsuccessful, please use the full domain name:
http://bp125-125TL01234567<ExternalNetworkDomainName> or http://bp87-87-0TL01234567<ExternalNetworkDomainName>

8.4.5 Starting up a plant segment

The following figure provides an example of the structure of a plant segment consisting of a Segment Controller and a certain number of KACO devices with string combiner (SC) combinations.

[9] If the device serial number features a "." dot, then this "." dot is replaced with a "-" dash in the host name as, according to RFC229, host names must not contain any "." dots.

For local host names, only characters in the range [a-z], [A-Z] and the minus character are permitted.

EN

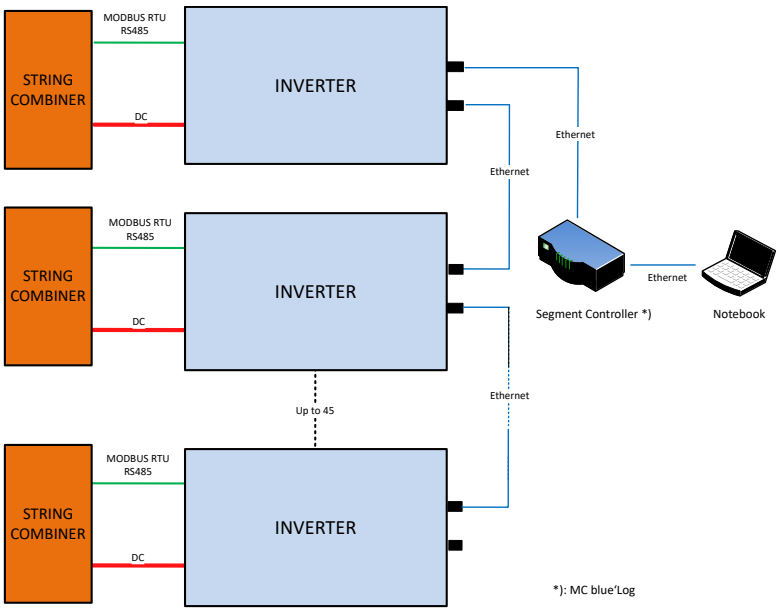

Fig. 51: Commissioning via segment controller

Application

Network infrastructure is already in place. All KACO units in the segment are accessible via a segment controller via Ethernet.

NOTE: Note that if there are several segment controllers in the system, they must not be connected to each other via the network during commissioning. [10]

After commissioning (assigning the units to the individual segment controllers), they can be connected via a `Main network switch` in the network.

Required components

- Notebook with Ethernet interface and pre-prepared start-up configuration file
- Segment Controller

Procedure

1. Connect the notebook to the Segment Controller via Ethernet (or to a switch that provides access to the Segment Controller).
2. Upload a pre-prepared device configuration (e.g. a device configuration that has been set up successfully on a single device).
3. Using the Segment Controller's WEB server, it is then possible to display and select all of the connected devices on the Segment Controller that should have this configuration.
4. Once the configuration has been uploaded to the respective devices, they will go into operation automatically following a restart.

[10] Note: Otherwise all inverters would be visible for the respective Segment Controller.

EN

9 Configuration and operation

9.1 Initial start-up

NOTE

Ensure DC power supply during initial start-up

The DC power supply must be guaranteed during initial start-up. [11]

The sequence of the settings required for initial start-up is pre-set in the configuration assistant.

Following successful authorisation and selection of the main menu option - Configuration , the installation wizard is opened directly (if the device is still on the factory defaults and commissioning has not yet been carried out).

The installation wizard can still be relaunched at a later stage to make further changes to the original configuration.

The installation process currently consists of multiple steps which are outlined below.

Step: Language selection

↻ The installation wizard has been started or re-started.

1. Select `Menu language` via the dropdown menu.
2. Confirm the action field.

⇨ The `Forward` button jumps to the next installation step.

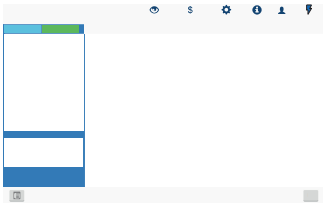

Fig. 52: Menu item: [See section 9.4.2 Page 50]

Step: Country configuration

↻ A language has been selected.

1. Select `Country` and `Grid type` from the dropdown menu.
2. Confirm the action field.

⇨ The `Forward` button jumps to the next installation step.

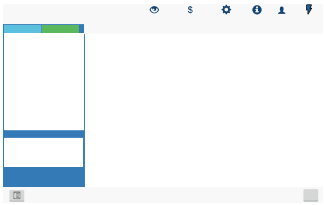

Fig. 53: Menu item: [See section 9.4.2 Page 50]

Step: Power limitation

↻ The country and grid type have been selected.

. **NOTE: The permanent power limitation of the maximum active and apparent power for generation plants is agreed between the grid operator and the plant operator.**

1. Activate `power limitation` if required
2. Set `maximum apparent power` and `maximum active power`.
3. Activate `password protection` if required.
4. Confirm the action field.

⇨ The `Forward` button jumps to the next installation step.

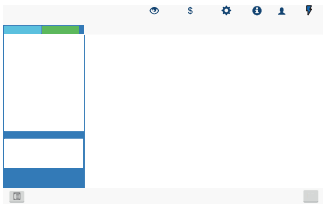

Fig. 54: Menu item: [See section 9.4.2 Page 50]

Step: Grid parameters

↻ The country and grid type have been selected.

. **NOTE: By default, IP addresses are assigned via the plant DHCP server.**

. **NOTE: If static IP addresses are required, you will have to assign these.**

. **CAUTION! In this case, it is no longer possible to distribute the configuration via the Segment Controller as this would then be part of the configuration and ultimately all inverters in the same segment would be assigned the same IP address.**

1. Activate `DHCP` or enter the `IP address` at the deactivated DHCP.
2. Confirm the action field.

⇨ The `Forward` button jumps to the next installation step.



Fig. 55: Menu item: [See section 9.4.2 Page 50]

[11] It is only possible to configure the grid parameters with DC voltage. The further parameters can also be configured with a present AC voltage.

EN

Step: Localisation

↻ Grid parameters have been set.

1. Set `Date, time and time zone` or initiate synchronisation with the client.
2. **NOTE: An NTP server needs to be activated for synchronization purposes** [12]
3. Select temperature unit from the dropdown menu.
4. Confirm the action field.

⇨ The `Forward` button jumps to the next installation step.

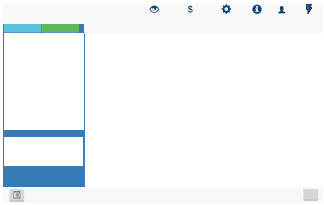

Fig. 56: Menu item: [See section 9.4.2 Page 50]

Step: ModBus

↻ Portal configuration completed.

. **NOTE: The device supports MODBUS/TCP and conventional SUNSPEC models. If there are concerns over security, write access can be deactivated.**

1. Specify the `Modbus port` and determine `Read/write access`.
2. Confirm the action field.

⇨ The `Forward` button jumps to the next installation step.

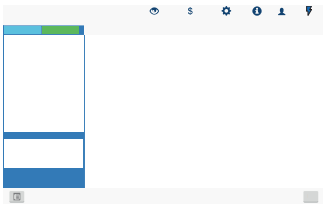

Fig. 57: Menu item: [See section 9.4.2 Page 50]

Step: String combiner

↻ Modbus has been specified.

1. Activate `string combiner monitoring`, if available.

. **NOTE: When using a blue'Log device, the only 3rd party string combiner device currently available, which can also be addressed in this manner via the segment controller, comes from “Kernel Sistemi”.**

2. Set other parameters.
3. Confirm the action field.

⇨ The `Forward` button jumps to the next installation step.

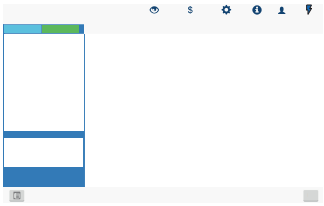

Fig. 58: Menu item: [See section 9.4.2 Page 50]

Step: Optional parameters

↻ Modbus has been specified.

. **NOTE: Using the plant ID, the device followed by its firmware version can be detected automatically in the Cloud/portal and assigned to the relevant plant.**

1. Enter the device name used to reach the device in the network.

. **NOTE: The coordinates identify the device installation location.**

2. Confirm the action field.

⇨ The `Forward` button jumps to the next installation step.

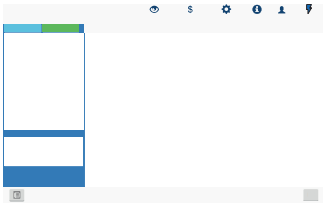

Fig. 59: Menu item: Only on the installation wizard!

Step: Finalisation

↻ Optional parameters have been set.

1. Generate installation report (includes a list of all relevant parameters for acceptance purposes)
2. Specify a name for the device installation report.
3. Confirm the action field.

NOTE: All of the settings can also be transferred to another device in the same series (provided that no individual parameters are required, e.g. static IP address).

1. Optional: Export current device settings to the client.
2. Device configuration completed successfully. Please click "Finish" to put the device into operation.

⇨ The initial installation is now complete. Set access to device(s) and "connect network" via the user area AC.

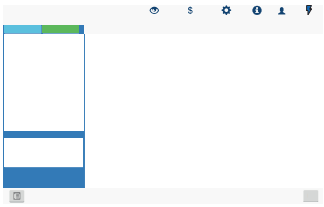

Fig. 60: Menu item: Only on the installation wizard!

9.2 Signal elements

The 3 LEDs on the device show the different operating states. The LEDs can display the following states:

[12] It is preferable to install this on a plant component. It is also possible to select an NTP server localized on the internet provided the device has direct access to the internet.

EN

 LED illuminated

 LED flashing

 LED not illuminated

Operating status	LED status	Description
		
Start		The green "Operating" LED is illuminated when AC and DC voltage is present. If the LED is flashing, internal communication between the components is being established. After flashing, the device is ready for feed-in. If the LED continues to flash for a long time, there is an internal communication error.
Feed-in start		The green "Operating" LED is lit. The green "Feed-in" LED is illuminated after the country-specific waiting period*. The device feeds into the grid. You can hear the circuit-breaker / interface switch switch on. **NOTE: Both LEDs are also illuminated in Q on Demand operation mode.**
Feed-in mode with reduced power		The green "Operating" LED is illuminated. The green LED "Feed" is flashing because one of the modes: internal power reduction, external power reduction, external reactive power request or standalone mode is active. The device feeds into the grid. You can hear the circuit-breaker / interface switch switch on.
Non-grid feed mode		The green "Operating" LED is lit.
Fault		None of the LEDs is illuminated or the red "Fault" LED is illuminated. Fault in the AC/DC source Conditional special cases: – There is no DC voltage present (e.g. DC isolator switch open) – DC voltage too low (< starting voltage) DC voltage is present (> starting voltage), but communications connection between the front end (operating unit) and back end (control unit) is faulty, or interrupted.

The 3 LEDs also signal the **firmware update process** when a USB stick is inserted. The LEDs can assume other states for this purpose:

 LED flashes rapidly

 LED flashes slowly

 LED flashes alternating

Operating status	LED status	Description
		
Procedure in progress		The green "Operating" LED is illuminated when the device is ready for use. **Note**: When updating via the web server and a USB stick is inserted in parallel, the device remains inactive until the USB stick is removed or then performs a reset and restarts.

EN

Operating status	LED status	Description
Procedure has commenced (initialisation).		The green "Operating" LED and the green "Feed-in" LED are flashing **quickly yet alternately**. **Note:** The procedure will last up to 5 min for firmware updates or up to 30 secs for parameter updates.
Process is initiated (update)		The green "Operating" LED and the green "Feed-in" LED are flashing **quickly**.
Procedure completed successfully.		The green "Operating" LED and the green "Feed-in" LED are flashing **slowly and in tandem**. **Note**: Check the new SW version via the web interface [See section 9.3 Page 47].
Fault		The red "Fault" LED is **flashing slowly**. **Note**: The procedure has not been completed successfully or a time limit has elapsed. **Important:** If the USB stick is removed during the initialisation phase, a device fault is triggered. Inserting the USB stick initiates a device restart.
No fault		No fault present.

9.3 User interface

NOTE

Tolerances of displayed measured values

Depending on the tolerances of the measuring elements, the measured and displayed values are not always the actual values. However, the measuring elements ensure maximum solar yield. Due to these tolerances, the daily yields shown on the display/monitor may deviate from the values on the grid operator's feed-in meter by up to 15%.

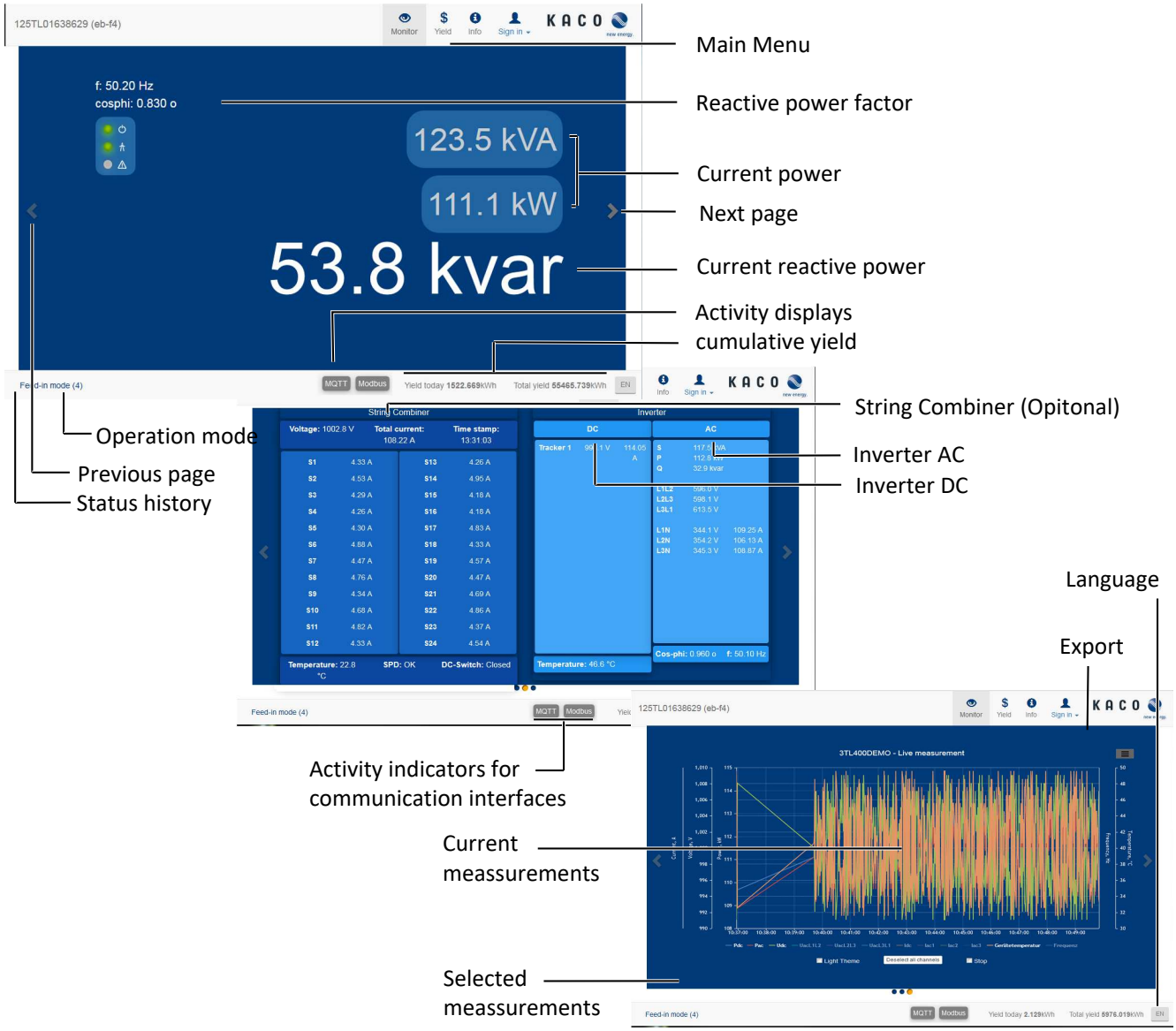

Fig. 61: Monitoring interface

Area	Description
Basic layout – 1st tab	Displays the current reactive power factor Displays the current output
Basic layout – 2nd tab	Displays AC and DC voltages
Basic layout – 3rd tab	Current measurement values with export function

Tab. 4: Description of the areas

EN

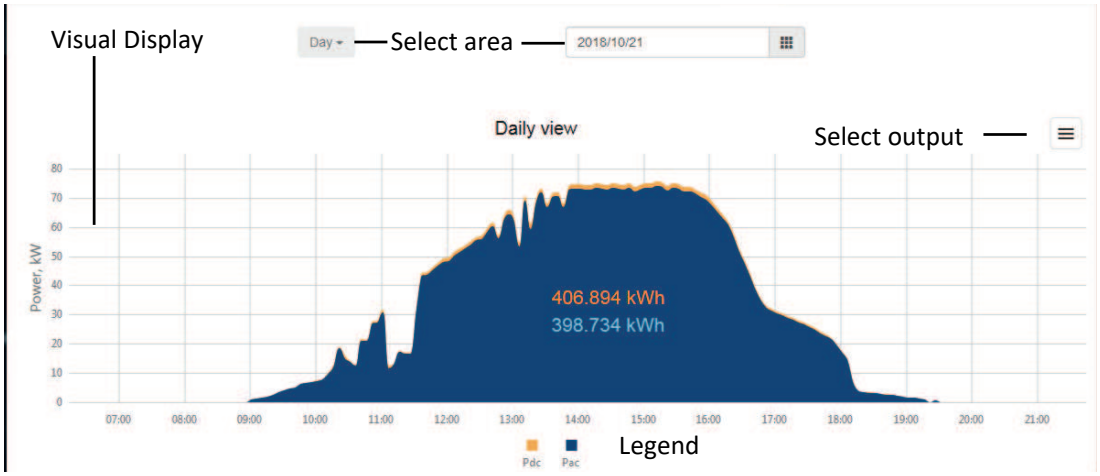

Fig. 62: Interface for evaluating the yields

Area	Description
Selection area	Filtering options for daily and annual values
Visual representation	Graphical bar chart
Key	Meaning of colour coding

Tab. 5: Description of the areas

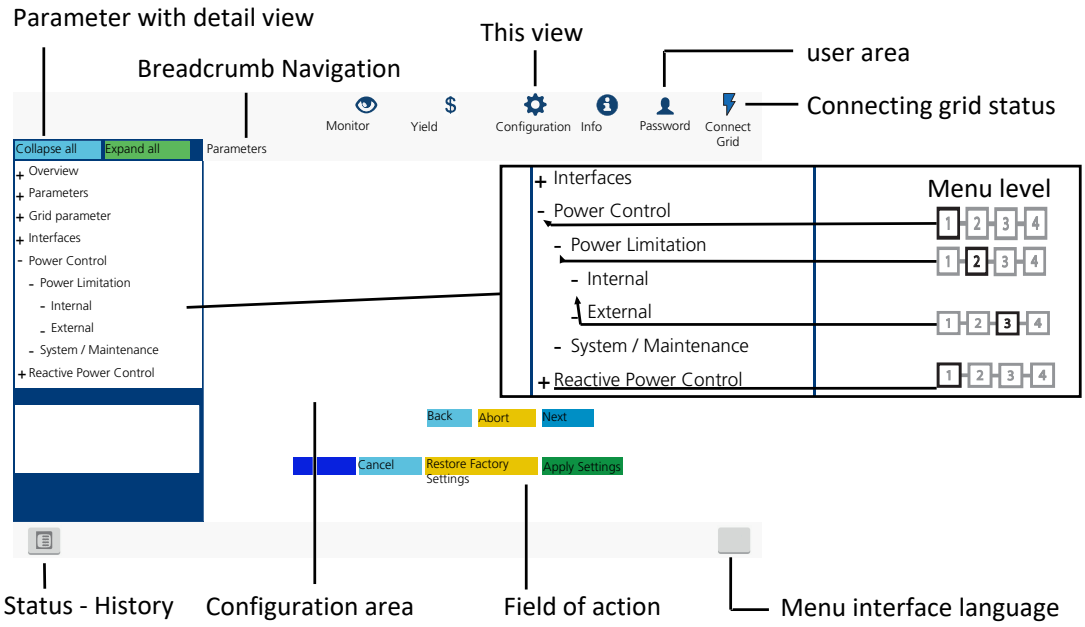

Fig. 63: Parametrisation interface

Area	Description
Menu bar Tool bar	Menus and commands for operating the interface.
Area of use	Displays parameter values, graphs or input options relative to the view, function and parameter selected.
Navigation area	Displays the user level and error messages. Enables selection of connected interfaces. Enables selection of devices connected at the interface. Enables selection of functions in relation to the parameter selected.

Tab. 6: Description of the areas

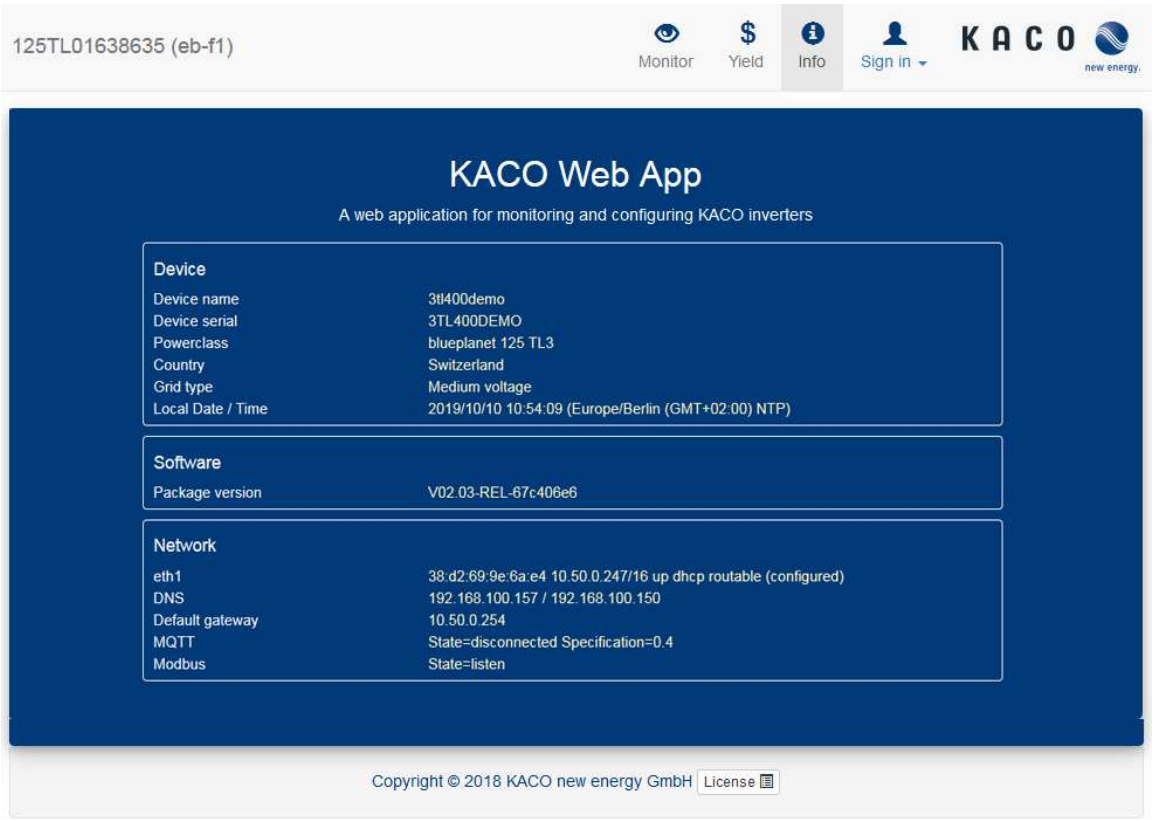

Fig. 64: Device and hardware information interface

Area	Description
Device	Displays the serial number, device name, grid type, local installation location and time
Software	Displays the firmware package installed
Network	Displays the current grid parameters

Tab. 7: Description of the areas

9.4 Menu structure

NOTE

Protection of special grid parameters* by means of a password (* not network parameters!)

1. As soon as the password has been activated, this also applies to external change requests (e.g. via MODBUS or other external interfaces).
2. You will be asked to enter the password if you would like to change a protected grid parameter. Once you have entered the password, protection will be disabled for all protected grid parameters (including the password protection setting) for 15 minutes. Protection is reactivated automatically after this time has elapsed.
3. If you attempt to disable a protected parameter group, you will have to enter the password first unless it was entered earlier in the session.
4. As soon as a set of configuration parameters has been exported, the password is part of this configuration.
5. If the configuration has been imported into another device, then the other device will have the same protection status. If the other device already had protection and the password for the new configuration is different, then the new configuration will be rejected.

NOTE

Use of a suitable web browser

We recommend using an up-to-date Firefox or Chrome browser or the default browser that is available on the mobile terminal devices to configure the device via the web interface.

EN

Symbols used

1 2 3 4	Menu level (0,1,2,3)		Password-protected menu (password can be requested from KACO customer service)
	[See section 9.3 Page 47]		
	Submenu		
	Display		Option box
			Setting range
	Option menu		Default value
			Interval

9.4.1 Yield via web user interface

Country-spec. Settings	Level	Display/ Setting	Action in this menu/meaning
	1 2 3 4	Daily view	Displays the recorded operating data graphically. ☞ Select a day. ⇨ The web interface shows the selected data.
	1 2 3 4	Weekly view	**NOTE: Displays the recorded operating data graphically.** ☞ Select a week. ⇨ The web interface shows the selected data.
	1 2 3 4	Month display	Displays the recorded operating data graphically. ☞ Select a month. ⇨ The web interface shows the selected data.
	1 2 3 4	Yearly view	Displays the recorded operating data graphically. ☞ Select a year. ⇨ The web interface shows the selected data.
	1 2 3 4	Total view	Displays the total yield up to now.
	1 2 3 4	Export / print Print PNG | PDF | JPEG | SVG | GIF	**NOTE: Opportunity to print out or save the chart.** 1. Select an output format. 2. Specify the storage location.

9.4.2 Configuration via web user interface

Country-spec. Settings	Level	Display/ Setting	Action in this menu/meaning
	1 2 3 4	Overview	Input screens for basic settings
	1 2 3 4	Localization Status	1. Select the required language for the user interface. 2. Select the current date and enter the time or press the button Sync with client device now“. 3. Select a time zone. 4. Specify the temperature unit. 5. Enter the device name. 6. Enter the degree of longitude and latitude of the installation location. 7. Enter the plant ID. 8. Confirm the action field.

EN

Country-spec. Settings	Level	Display/ Setting	Action in this menu/meaning
	1 2 3 4	ACSettings	Input screens for grid parameters.
	1 2 3 4	Country & Grid type	**NOTE: This option influences the country-specific operating settings of the device. Please consult KACO service for further information.** 1. Select country and grid type. 2. Observe the note for [See section 9.4.2 Page 72]
		Nominal grid voltage & Nominal grid frequency Status	☞ Specify optional nominal grid voltage. **NOTE: The device switches off if the grid frequency deviates from the nominal grid voltage by more than 9.5 Hz.** 1. Select optional nominal grid frequency. 2. Confirm the action field.
	1 2 3 4	Trip Settings	**NOTE: Activate shutdown according to generic parameters, frequency or voltage.**
	1 2 3 4	Generic parameters	**NOTE: Opportunity to activate standard protection shutdown**
	1 2 3 4	Trip with intentional delay Check to enable	1. If necessary, activate delayed trip-off. 2. Confirm the action field.

EN

Country-spec. Settings	Level	Display/ Setting	Action in this menu/meaning
		Frequency	**NOTE: Opportunity to monitor frequency shutdown**
		Trip underfrequency monitoring Status	☞ Activate if necessary.
		Number of trip underfrequency levels 1- 5 / 2 / 1	☞ Specify the number of support levels.
		Trip underfrequency level 1 45 – 65 [Hz] / 47.5 [Hz]/ 0.01 Trip underfrequency time level 1 0 – 100000 [ms] / 100 [ms] / 1	**NOTE: If the grid frequency is within the deactivation range for the duration of the deactivation time, then the function is deactivated.** ☞ Define range and trip-off time.
		Trip underfrequency level 2 - 5 42.5 – 65 [Hz] / 47.5 [Hz]/ 0.01 Trip underfrequency time level 2 – 5 0 – 100000 [ms] / 100 [ms] / 1	
		Trip overfrequency monitoring Status	☞ Activate if necessary.
		Number of trip overfrequency levels 1- 5/ 2 / 1	☞ Specify the number of support levels.
		Trip overfrequency level 1 45.0 – 66 [Hz] / 51.5 [Hz]/ 0.01 Trip overfrequency time level 1 0 – 1000000 [ms] / 100 [ms] / 1	**NOTE: If the grid frequency is within the deactivation range for the duration of the deactivation time, then the function is deactivated.** 1. Define range and trip-off time. 2. Confirm the action field.
		Trip overfrequency level 2 – 5 45.0 – 66 [Hz] / 51.5 [Hz]/ 0.01 Trip overfrequency time level 2 – 5 0 – 1000000 [ms] / 100 [ms] / 1	

EN

Country-spec. Settings	Level	Display/ Setting	Action in this menu/meaning
	1 2 3 4	Voltage	**NOTE: Opportunity to monitor the voltage shutdown**
	1 2 3 4	Trip undervoltage monitoring Status	☞ Activate if necessary.
	1 2 3 4	Number of trip undervoltage levels 1- 5 / 2 / 1	☞ Specify the number of support levels.
	1 2 3 4	Trip undervoltage level 1 10 – 100 [% U_{nom}] / 80 [% U_{nom}] / 0.1 Trip undervoltage time level 1 0 – 180000 [ms] / 1000 [ms] / 1	☞ Define range and trip-off time.
	1 2 3 4	Trip undervoltage level 2 – 5 10 – 100 [% U_{nom}] / 45 [% U_{nom}] / 0.1 Trip undervoltage time level 2 – 5 0 – 180000 [ms] / 300 [ms] / 1	
	1 2 3 4	Trip overvoltage monitoring Status	☞ Activate if necessary.
	1 2 3 4	Number of trip overvoltage levels 1- 5 / 2 / 1	☞ Specify the number of support levels.
	1 2 3 4	Trip overvoltage level 1 100 – 125 [% U_{nom}] / 110.0 [% U_{nom}] / 0.1 Trip overvoltage time level 1 0 – 180000 [ms] / 20000 [ms] / 1	1. Define range and trip-off time. 2. Confirm the action field.
	1 2 3 4	Trip overvoltage level 2 – 5 100 – 125 [% U_{nom}] 114.8 [% U_{nom}] / 0.1 Trip overvoltage time level 2 to 5 0 – 180000 [ms] / 100 [ms] / 1	

EN

Country-spec. Settings	Level	Display/ Setting	Action in this menu/meaning
	1 2 3 4	10 min. average	**NOTE: Monitoring of a variation in the average voltage value of 10 minutes.** ☞ Activate if necessary.
	1 2 3 4	Monitoring 10 minute average grid voltage Status 10 minutes average 100 – 125 [% Unom] / 125.0 0.1%	☞ Set the voltage in % via averaging.
	1 2 3 4	Island Detection	**NOTE: Grid operators require shutdown of the device with standalone grid detection. More detailed information at:** [See section 10.5 Page 97]
	1 2 3 4	Mode Off / ROCOF / ROCOF enhanced / Frequency shift Password Protection	**NOTE: This function is active in the factory setting and may only be deactivated in standalone islanding operation (without grid).** 1. Select mode and note menu items. 2. Activate password protection if necessary. 3. Confirm the action field.
	1 2 3 4	ROCOF Password Protection	☞ Activate passive grid influence by application of a frequency.
		ROCOF enhanced Password Protection	☞ Activate active grid influence by application of a frequency.
	1 2 3 4	ROCOF threshold stage 1 value 0.1 – 6.0 [Hz / s] / 0.1 ROCOF threshold stage 2 value 0.1 – 6.0 [Hz / s] / 0.1	☞ Define threshold for ROCOF.
		ROCOF threshold stage 1 time 100 – 5000 [ms] / 0.1 ROCOF threshold stage 2 time 100 – 5000 [ms] / 0.1	☞ Define time value for ROCOF.
	1 2 3 4	ROCOF enhanced	**NOTE: Active detection after exceeding the first threshold.**

EN

Country-spec. Settings	Level	Display/ Setting		Action in this menu/meaning
	1 2 3 4	ROCOF threshold stage 1 value ⚙ 0.1 – 6.0 [Hz / s] / ◠ 0.1 ROCOF threshold stage 2 value ⚙ 0.1 – 6.0 [Hz / s] / ◠ 0.1		☞ Define threshold for ROCOF.
		ROCOF threshold stage 1 time ⚙ 100 – 5000 [ms] / ◠ 0.1 ROCOF threshold stage 2 time ⚙ 100 – 5000 [ms] / ◠ 0.1		☞ Define time value for ROCOF.
	1 2 3 4	ROCOF proportionality factor ⚙ -5000 – 5000 [‰ / Hz / s] / ◦ -20 / ◠ 1 ☑☰ Status		1. Define the proportionality factor. 2. Confirm the action field.
	1 2 3 4	Frequency shift ☑☰ Off | On		☞ Activate frequency shift.
	1 2 3 4	Pulse period repetition time ⚙ 40 – 6000 [ms] / ◦ 1000 [ms] / ◠ 1 [ms]		☞ Define period for detection.
	1 2 3 4	Ramp Rate Limitation		**NOTE: Opportunity to limit power in the case of an increasing and decreasing nominal power/maximum power.**
		Operation mode ☑☰ ON | OFF		☞ Select operation mode.
		Increasing gradient & Decreasing gradient ⚙ 1 – 65534 [%/min] / ◦ 65534 / ◠ 1		☞ Set gradient. This percentage relates to the nominal power/maximum power. ☞ Confirm the action field.

EN

Country-spec. Set-tings	Level	Display/ Setting	Action in this menu/meaning
	1 2 3 4	Connection Conditions	**NOTE: Precise connection conditions should be specified relative to the grid conditions.**
	1 2 3 4	Min. conn. voltage after grid mon. 10 – 110 [% Unom] / 94.8 / 0.1 & Max. conn. voltage after grid mon. 90 – 125 [% Unom] / 110.0 / 0.1	☞ Specify switch-on voltage range after grid error.
	1 2 3 4	Min. conn. frequency after grid mon. 45 – 65 [Hz] / 47.5 / 0.01 & Max. conn. frequency after grid mon. 45 – 65 [Hz] / 50.05 / 0.01	☞ Specify switch-on frequency range after grid error.
	1 2 3 4	Min. conn. voltage after grid failure 10 – 110 [% Unom] / 94.8 / 0.1 & Max conn. voltage after grid failure 90 – 125 [% Unom] / 110.0 / 0.1	☞ Specify switch-on voltage range after grid error.
	1 2 3 4	Min. conn. frequency after grid failure 45 – 65 [Hz] / 47.50 / 0.01 & Max. conn. frequency after grid failure 45 – 65 [Hz] / 50.05 / 0.01	☞ Specify switch-on frequency range after grid error.
	1 2 3 4	Monitoring time PV voltage 1000 – 1800000 [ms] / 60000 / 1000 **&** Monitoring time grid voltage 1000 – 1800000 [ms] / 60000 / 1000 **&**	☞ Specify the time for monitoring the grid voltage and PV voltage.
	1 2 3 4	Waiting time after grid failure 1000 – 1800000 [ms] / 60000 / 1000	1. Set waiting time after grid failure. 2. Activate optional password protection. 3. Confirm the action field.

EN

Country-spec. Settings	Level	Display/ Setting	Action in this menu/meaning
	2	Active Power Control	**NOTE: The output power of the device can be set permanently to a lower value than the maximum output power via the active power regulation.**
	3	Internal	**NOTE: Option for internal power limitation as required by the grid operator to limit the maximum power rating of the system at the grid connection point. More detailed information at** [See section 10.4.1 Page 94]
	3	Power Limitation Check to enable	☞ Specify the activation status.
	3	Maximum apparent power Slim 10000 -125000 / [See section 4 Page 12][VA]/ 100 [VA]	**NOTE: The max. apparent power limits the internal power of the device.** ☞ Enter the value or set the value using the slider.
	3	Maximum active power Plim 1.0 – 100.0 [% Slim] / 100 [% Slim] / 0.1	**NOTE: The max. active power limits the internal power of the device** ☞ Enter the value or set the value using the slider.
	3	External	**NOTE: The parameters set here are used by default if they are not sent via the communication interface, or if communication fails for the set fallback time.**
	3	Power Limitation Check to enable	☞ Specify the activation status.
	3	AC fallback active power 0 – 100 [%Plim] / 100 [%Plim] / 1	☞ Set fallback power. Specifies the standard power in the event of a communication timeout. If no active power command is received within the configured fallback time, the device sets the power to the configured fallback power.
	3	Fallback time 0 – 43200 [s] / 300 [s] / 1	☞ Set the fallback time for the external power specification. **WARNING! After the set fallback time, external (RS485 or Modbus) specifications for cos-phi, Q and P are reset to the relevant set fallback value (cos-phi constant, Q-constant or fallback power).** **NOTE: If the fallback time is set to 0s, external specifications for cos-phi, Q and P are not reset (continued operation using the most recently received target value).**
	3	Output gradient limitation increase & Output gradient limitation decrease 1 – 65534 [% Slim / min] / 65534 [% Slim / min] / 1	1. Set the maximum change in active power when increasing power. 2. Set the maximum change in active power during power control.

EN

Country-spec. Settings	Level	Display/ Setting	Action in this menu/meaning
	1 3 4	Settling time 200 – 60000 [ms] / 1000 [ms] / 10 Status	1. Specify the settling time. 2. Confirm the action field.
	1 2 3 4	P(f)	**NOTE: Activate frequency-dependent power reduction in the P(f) menu.**
Not for IL, IT	1 3 4	Operation mode Off | Mode 1 | Mode 2 | Mode 3	☞ Specify the operation mode. **NOTE: Mode 1 = Hysteresis active - Limit; Mode 2 = Hysteresis inactive - Limit; Mode 3 = Hysteresis inactive - Set**
	1 2 3 4	Power reference at underfrequency Instantaneous power | Nominal power Power reference at overfrequency Instantaneous power | Nominal power	1. Specify control method with underfrequency. 2. Specify control method with overfrequency.
	1 3 4	Dynamic gradient mode ON | OFF	☞ Activate dynamic gradient. **NOTE: Gradient "Feed-in/charging with over/under frequency" is not displayed.**
	1 2 3 4	Gradient at overfrequency (feed-in) 0 – 200(%/ Hz) 40(%/ Hz) Gradient at underfrequency (feed-in) 0 – 200(%/ Hz) 40(%/ Hz)	1. Specify gradient for feed-in with overfrequency. 2. Specify gradient for feed-in with underfrequency.
	1 3 4	Activation threshold at underfrequency 40 – 50 [Hz] / 0.01 [Hz] Activation threshold at overfrequency 50 – 60 [Hz] 0.01 [Hz]	1. Set the frequency thresholds for activating the power limitation with undervoltage. 2. Set frequency thresholds for activating the power limitation with overvoltage.
	1 2 3 4	Gradient on falling frequency 0 – 200 [% Pref [Hz] / 40 [% Pref/ Hz] / 1	☞ Specify gradient in the case of a decreasing frequency as a $‰_0$ (per thousand) / minute (if mode "1" or mode "2" is active).
Not for IL, IT	1 3 4	P(f) deactivation time 0 – 6000000 [ms] / 0 [ms] / 1000 [ms]	☞ Specify time for power reduction (if mode 1 is active).

EN

Country-spec. Settings	Level	Display/ Setting	Action in this menu/meaning
	1 2 3 4	P(f) deactivation gradient ⚙ 0 – 65534 [% Smax/ min]/ ◦ 10 / 10 1	☞ Determine the deactivation gradient.
	1 2 3 4	P(f) intentional delay ⚙ 0 – 5000 [ms] / ◦ 0 [ms] / 10 1	☞ Set the power limitation delay.
	1 2 3 4	Deactivation range lower limit ⚙ 45 – 61.5 [Hz] / 10 0.01 & Deactivation range upper limit ⚙ 45 – 70 [Hz] / 10 0.01	☞ Set the lower and upper deactivation range in Hz. **NOTE: Only evaluated in mode 1.** The function is deactivated if the frequency returns to the range between the minimum and maximum deactivation threshold and remains in this range for the duration of the deactivation time.
	1 2 3 4	Activation delay ⚙ 0 – 5000 [ms] / ◦ 0 [ms] / 10 1	☞ Set the control delay.
	1 2 3 4	Output gradient limitation increase & Output gradient limitation decrease ⚙ 1 – 65534 [% Slim / min] / ◦ 65534 [% Slim / min] / 10 1	☞ Specify the increasing and decreasing output gradient.
	1 2 3 4	P(f) settling time ⚙ 200 – 2000 [ms] / ◦ 200 [ms] / 10 1 [ms] ☑ Status	1. Set the P(f) settling time mode. 2. Confirm the action field.
	1 2 3 4	Deact. lim. time after fault ⚙ 0 – 1000 [s] / ◦ 0 [ms] / 10 1000 [s]	☞ After the end of the fault, the change in active power is limited to the set gradient for the specified time. **NOTE: Only evaluated in mode 2&3.**
	1 2 3 4	Deact. grad. incr. after fault & Deact. grad. decr. after fault ⚙ 0 – 65534 [% / min] / ◦ 10 [% / min] / 10 1	☞ Limits the change in active power after the end of the fault. **NOTE: Only evaluated in mode 2 & 3.**
	1 2 3 4	P(U)	**NOTE: Activate voltage-dependent power reduction in the P(U) menu.**
	1 2 3 4	Operation mode ☑ Off | On	☞ Activate the control process. **Off**: Deactivates dynamic grid support using dynamic reactive current. Dynamic grid support remains active on account of immunity to interference.
	1 2 3 4	Reference power ☑ Actual power | Nominal power	☞ Select the power-dependent control method.

EN

Country-spec. Settings	Level	Display/ Setting	Action in this menu/meaning
	1 2 3 4	Evaluated voltage ☰ Maximum phase voltage | Positive phase sequence voltage	☞ Select the voltage to be rated. Specifies which voltage is evaluated in a three-phase system.
	1 2 3 4	Hysteresis mode ☰ Off | On	**NOTE: Hysteresis mode affects the shutdown response of P(U).** ☞ Activate the mode.
	1 2 3 4	Deactivation gradient ⚙ 0 – 65534 [% / min] / ◦ 100 [% / min] / ◠ 1	☞ Set the gradients for the power limitation.
	1 2 3 4	Deactivation time ⚙ 0 – 60000000 [ms] / ◦ 0 [ms] / ◠ 1000 [ms]	☞ Specify the time for voltage reduction.
	1 2 3 4	Output gradient limitation increase & Output gradient limitation decrease ⚙ 1 – 65534 [% Slim / min] / ◦ 65534 [% Slim / min] / ◠ 1	☞ Specify the increasing and decreasing output gradient.
	1 2 3 4	Settling time ⚙ 500 – 120000 [ms] / ◦ 2000 [ms] / ◠ 10 [ms]	☞ Specify the settling time.
	1 2 3 4	Active curve ⚙ 1 – 5	☞ Select active curve. **NOTE: Up to 5 characteristic curves can be configured independently and one of them can be activated for regulation each time.**
	1 2 3 4	Number of nodes ⚙ 2 – 5	☞ Specify the number of nodes.
		Power ⚙ 0.0 – 100.0 [% Pref] / ◦ 100 [% Pref] / ◠ 1	☞ Specify power for 1st, 5th ... node as a percentage of the maximum power.
		Voltage ⚙ 80.0 – 125.0 [%Unom] / ◦ 112 / ◠ 0.1 ☰ Status	1. Specify voltage for 1st, 5th ... node as a percentage of the maximum voltage. 2. Confirm the action field.

EN

Country-spec. Settings	Level	Display/ Setting	Action in this menu/meaning
	2 3 4	Power Rampup	**NOTE: Power ramp-up is used to ramp up the power gradually. More detailed information at** [See section 10.4.2 Page 96]
	3 4	Power rampup gradient ⚙ 1 – 3000 [% / min] / ◦ 10 [% / min] / ◓ 1	☞ Set increase.
	3 4	Rampup on every connect Rampup on first connect Rampup after grid failure ☑ Check to enable	1. Activate option. 2. Confirm the action field.
	2 3 4	Reactive Power Control	**NOTE: Activate the reactive power process in the mode menu. More detailed information at** [See section 10.1 Page 75]
	3 4	Mode ☑ Specification cos-phi | Specification Q | Cos-phi(P/Plim) | Q(U) |	1. Select a control process. 2. Confirm the action field.
	3 4	Cos-phi constant	**NOTE: Define the cos ϕconstant.**
	3 4	cos-phi const. ⚙ 0.3 – 1 / ◦ 1 / ◓ 0.001	☞ Determine the specified power factor.
	3 4	Power gradient increase & Power gradient decrease ⚙ 1 – 65534 [% Slim / min] / ◦ 65534 [% Slim / min] / ◓ 1	1. Maximum change in the reactive power %S_{lim}/min in the event of a change to overexcited mode. 2. Maximum change in the reactive power %S_{lim}/min in the event of a change to underexcited mode.
	3 4	Settling time ⚙ 1000 – 120000 [ms] / ◦ 5000 [ms] / ◓ 10	1. Set the settling time in the event of an abrupt change in the reactive power target value (e.g. caused by a voltage jump). 2. Confirm the action field.
	3 4	Q constant	**NOTE: Define Q setpoint.**
	3 4	Priority mode ☑ Q-Priority | P-Priority	☞ Set priority.
	3 4	Q constant ⚙ 0 – 100 [% Slim] / ◦ 0 [% Slim] / ◓ 0.1	☞ Set the idle power Q to a fixed value.
		⚙ Under-excited | over-excited	☞ Select the type of phase shift. **NOTE: Under-excited relates to inductive load, over-excited relates to capacitive load.**

EN

Country-spec. Settings	Level	Display/ Setting	Action in this menu/meaning
	1 3 4	Output gradient limitation increase & Output gradient limitation decrease ⚙ 1 – 65534 [% Slim / min] / ◦ 65534 [% Slim / min] / 1	1. Maximum change in the reactive power in the event of a change to overexcited mode. 2. Maximum change in the reactive power in the event of a change to underexcited mode.
	1 3 4	Settling time ⚙ 1000 – 120000 [ms] / ◦ 5000 [ms] / 10	1. Set the settling time in the event of an abrupt change in the reactive power target value (e.g. caused by a voltage jump). 2. Confirm the action field.
	1 3 3 4	Cos-phi(P)	**NOTE: Define the cos ϕ (P).**
	1 3 4	Lock-In voltage ⚙ 10 – 126.6 [% Unom] / ◦ 80 [% Unom]/ 0.1	☞ Set the voltage above which control is activated.
	1 3 4	Lock-Out voltage ⚙ 10 – 126.6 [% Unom] / ◦ 80 [% Unom]/ 0.1	☞ Set the voltage below which control is deactivated.
	1 3 4	Power gradient increase & Power gradient decrease ⚙ 1 – 65534 [% Slim / min] / ◦ 65534 [% Slim / min] / 1	1. Maximum change in the reactive power %S_{lim}/min in the event of a change to overexcited mode. 2. Maximum change in the reactive power %S_{lim}/min in the event of a change to underexcited mode.
	1 3 4	Settling time ⚙ 1000 – 12000 [ms] / ◦ 5000 [ms] / 10	☞ Set the settling time in the event of an abrupt change in the reactive power target value.
	1 3 4	Number of nodes ⚙ 2 – 10	**NOTE: The maximum number of configurable nodes depends on the selected grid type.** ☞ Specify the number of nodes.
	1 3 4	Node 1- Node 10 Power Curve 1 ⚙ 0-100 % [% Slim] / ◦ 0, 50, 100 % [% Slim] / 1	☞ Power factor for 1st , 10th ... node as a percentage of the maximum power. **NOTE: For the 1st node, the power must be 0%; for the last node, the power must be 100%. The power values of the nodes must increase continuously.**
		Cos-phi Curve 1 ⚙ 0.3 – 1 [ind/cap] / ◦ 1 / 0,001	☞ Specify the cos ϕ of the node.
		☑ Over-excited | under-excited	☞ If a reactive power not equal to 1 is selected: Select the type of phase shift. **NOTE: Over-excited relates to a capacitive load, under-excited relates to an inductive load.**
		☑ Status	☞ Confirm the action field.

EN

Country-spec. Settings	Level	Display/ Setting	Action in this menu/meaning
		Number of nodes 2 – 10	**NOTE: The maximum number of configurable nodes depends on the selected grid type.** ☞ Specify the number of nodes.
		Node 1- Node 10 Power Curve 1 0-100 % [% Slim] / 0, 50, 100 % [% Slim] / 1	☞ Power factor for 1st , 10th ... node as a percentage of the maximum power. **NOTE: For the 1st node, the power must be 0%; for the last node, the power must be 100%. The power values of the nodes must increase continuously.**
		Cos-phi Curve 1 0.3 – 1 [ind/cap] / 1 / 0,001	☞ Specify the cos ϕ of the node.
		Over-excited | under-excited Status	☞ If a reactive power not equal to 1 is selected: Select the type of phase shift. **NOTE: Over-excited relates to a capacitive load, under-excited relates to an inductive load.** ☞ Confirm the action field.
		Q(U)	**NOTE: Define Q(U).**
		Lock-In power 0 – 100 [% Slim] / 20 [% Slim] / 1	☞ Set the active power as a % of rated power above which control is activated.
		Lock-Out power 0-100 [% Slim] / 5 [% Slim] / 1	☞ Set the active power as % of rated power below which control is deactivated.
		Lock-In time 0 – 60000 [ms] / 30000 [ms] / 1000 [ms] Lock-Out time 0 – 60000 [ms] / 30000 [ms] / 1 [ms]	☞ Set the length of time that the active power must remain above the lock-in / lock-out power level before control is activated.
		Dead time 0 -10000 [ms] / 0 [ms] / 1	☞ Set the intentional delay for the start of the Q(U) function.
		Output gradient limitation increase & Output gradient limitation decrease 1 – 65534 [% Slim / min] / 65534 [% Slim / min] / 1	1. Maximum change in the reactive power in the event of a change to overexcited mode. 2. Maximum change in the reactive power in the event of a change to underexcited mode.
		Settling time 1000 – 120000 [ms] / 1000 [ms] / 10	☞ Set the response speed of the control.

EN

Country-spec. Settings	Level	Display/ Setting		Action in this menu/meaning
	1 2 3 4	Minimum cos-phi Q1 - Minimum cos-phi Q4 ⚙ 0– 1 / ◦ 0 / ◠ 0,001		☞ Enter the minimum cos ϕ factor for quadrants 1 and 4.
	1 2 3 4	Voltage dead band ⚙ 0 – 5 [% Uref] ◦ 0.0 ◠ 0.1		☞ Set voltage dead band in %.
	1 2 3 4	Q(U) Offset (temporary) U offset ⚙ -100 -100 [% Slim] / ◦ 0.0 [% Slim] / ◠ 0.1 Q offset ⚙ -100 -100 [% Slim] / ◦ 0.0 [% Slim] / ◠ 0.1		☞ Set the intended Q or U offset for the function.
	1 2 3 4	Q minimum ⚙ 0 – 100 [% Slim] / ◦ 0 [% Slim] / ◠ 0.1		☞ Set the reactive power Q to a minimum value.
		⚙ Under-excited | over-excited		☞ Select the type of phase shift. **NOTE: Under-excited relates to inductive load, over-excited relates to capacitive load.**
	1 2 3 4	Q maximum ⚙ 0 – 100 [% Slim] / ◦ 0 [% Slim] / ◠ 0.1		☞ Set the reactive power Q to a maximum value.
		⚙ Under-excited | over-excited		☞ Select the type of phase shift. **NOTE: Under-excited relates to inductive load, over-excited relates to capacitive load.**
US, UD	1 2 3 4	Autonomous adjustment Vref ☑ Check to enable		☞ When autonomous adjustment is activated, the reference voltage of the reactive power function is adjusted to the measured voltage using a PT1 filter. This dynamically shifts the Q(U) characteristic curve.
US, UD	1 2 3 4	Time constant Vref adjustment ⚙ 300 – 5000 [s] ◦ 300 s		☞ Set the time constant for adjusting the dynamic reference voltage.
	1 2 3 4	Q(U) Active curve ⚙ 1 – 4		☞ Select active curve. **NOTE: Up to 4 characteristic curves can be configured independently and one of them can be activated for regulation each time.**
	1 2 3 4	Priority mode ⚙ Q-Priority | P-Priority		☞ Set priority for reactive power – Q or active power – P. **NOTE: When it comes to P-priority, the reactive power adjustment range is limited subject to the active power that is currently available and fed in.**
	1 2 3 4	Number of nodes ⚙ 2 – 10		**NOTE: The maximum number of configurable nodes depends on the selected grid type.** ☞ Specify the number of nodes.

EN

Country-spec. Settings	Level	Display/ Setting		Action in this menu/meaning
		Node 1- Node 10 Power / Excitation / Voltage 0 – 100 [% Slim] / 43.6 [% Slim] / 0.1		☞ Set the reactive power of the node as a percentage of the maximum power.
		Over-excited | under-excited		☞ Select the type of phase shift. **NOTE: Over-excited relates to a capacitive load, under-excited relates to an inductive load.**
		0 – 125.0 [% Unom] / 90 … 110.0 [% Unom] / 0.1 [% Unom]		☞ Enter the voltage of the node in volts. **NOTE: The voltage values of the nodes must increase continuously. At voltages below the 1st node and voltages above the last node, the reactive power value of the 1st or last node is used each time.**
		FRT (Fault Ride Through)		**NOTE: The device supports dynamic grid stabilisation (Fault Ride-Through). More detailed information at** [See section 10.3 Page 90]
		Operation mode ON | OFF		☞ Select a control process. **On**: Activates dynamic grid support using dynamic reactive current. **Off**: Deactivates dynamic grid support using dynamic reactive current. Dynamic grid support remains active on account of immunity to interference.
		Setting - Manual | Predefined zero current		☞ Select a control process.
		Priority – Reactive current limitation | Active current priority		☞ Select a control process.
		Constant k positive sequence dip & Constant k positive sequence swell k 0 – 10 2 0.1		☞ Set amplification factor k for the pos. sequence for drop and increase in the grid voltage.
		Constant k negative sequence dip Constant k negative sequence swell k 0 – 10 2 0.1		☞ Set amplification factor k for the neg. sequence for drop and increase in the grid voltage.
		Dead band 2 – 120 [% Uref] 10.0 0.1		☞ Set dead band in %.
		Dynamic reactive current only Off | On		**NOTE: With activated FRT mode, the pre-fault reactive current can be added.** ☞ If necessary, activate pre-fault reactive current.
		Dead band mode Mode 1 | Mode 2		☞ Select dead band mode for the active control process.
		Reference voltage 80.0 – 110.0 [% Unom] 100 0.1		☞ Set reference voltage for the active control process.

EN

Country-spec. Settings	Level	Display/ Setting	Action in this menu/meaning
	1 2 3 4	Minimum operating voltage deactivation ⚙ 0.0 – 100 [% Unom] ◠ 0.1 & Maximum operating voltage deactivation ⚙ 100.0 – 125.0 [% Unom] ◠ 0.1	☞ Set voltage range for the active control process.
	1 2 3 4	Zero current activation undervoltage ⚙ 0 – 80 [% Unom] ◠ 0.1 Zero current activation overvoltage ⚙ 110 – 141.8 [% Unom] ◠ 0.1	☞ Set voltage threshold for zero current mode. If one or more phase/phase or phase/neutral conductor voltages move below or above the configured threshold, the inverter changes to zero current mode. The total current is regulated to virtually zero.
	1 2 3 4	Reactive current limitation ⚙ 0– 100 [% Imax]/ ◦ 100 [% Imax]/ ◠ 1	☞ Set the reactive power limitation.
	1 2 3 4	Minimum support time ⚙ 1000 – 15000 [ms] / ◦ 5000 [ms] ◠ 10	☞ Set the minimum support time.
	1 2 3 4	Overvoltage protection	**NOTE: Shutdown carried out within a grid cycle.**
	1 2 3 4	Transient overvoltage protection ⚙ 114.8 – 127.5 [% Unom] / ◦ 127.5 / ◠ 0.1%	1. Set the transient overvoltage protection. 2. Confirm the action field.
	1 2 3 4	External grid protection disconnection	**NOTE: Opportunity to detect the external grid protection devices**
	1 2 3 4	External grid protection ☑☰ No device | Powador-protect | third-party device	☞ Select device.

EN

Country-spec. Settings	Level	Display/ Setting		Action in this menu/meaning
	1 2 3 4	Powador-protect		**NOTE: Configures the grid shutdown via a Powador protect connected to the "INV OFF" input of the device.**
		Powador-protect operation mode Auto | On | Off		↻ Auto/On: A Powador-protect is operating in the photovoltaic system and is connected to the device at the "INV OFF" input. ☞ Set the operating mode for Powador-protect. **Auto**: The device automatically detects a Powador-protect integrated into the photovoltaic system. **On**: The digital signal of the Powador-protect must be present at the digital input of the device for the device to begin feed-in. **Off**: The device does not check whether a Powador-protect is integrated into the PV plant.
	1 2 3 4	3rd party device		**NOTE: Configures the grid shutdown via a 3rd party device connected to the digital input of the device**
		3rd party device name		☞ Enter the name of the 3rd party device.
		3rd party device operation mode ON | OFF		☞ Select operation mode. **On:** The digital signal of the 3rd party device must be on the device's digital input so that the device does not shut down. **Off**: The device does not check whether a 3rd party device is integrated into the PV system.
	1 2 3 4	DCSettings		Input masks for DC source (PV generator/battery)
	1 2 3 4	DC starting voltage ⚙ / ⊙ [See section 4 ▸ Page 12][V]/ 1 [V]		**NOTE: The device begins feed-in as soon as this DC voltage is present.** 1. Set the starting voltage. 2. Confirm the action field.
	1 2 3 4	Insulation resistance ⚙ 100 – 2000 [kOhm] / ⊙ 300 [kOhm] / 1[kOhm]		1. Set threshold value at which the insulation monitor reports a fault. 2. Confirm the action field.
	1 2 3 4	Communication		Input screens for configuring the interfaces.
	1 2 3 4	Ethernet		**NOTE: Opportunity to parametrise the Ethernet interface.**
	1 2 3 4	IP Settings		**NOTE: Parametrization of network access.**
	1 2 3 4	DHCP Check to enable		☞ Activate or deactivate DHCP. **On**: Once the DHCP server becomes available, the IP address, subnet mask, gateway and DNS server are automatically applied and the aforementioned menu options are filled out. **Off**: Apply settings manually.
	1 2 3 4	IP Address		☞ Allocate a unique IPv4 address in the network.
	1 2 3 4	Subnet Mask		☞ Assign a subnet mask.
	1 2 3 4	Default gateway		☞ Enter IPv4 address of the gateway.
	1 2 3 4	DNS server settings via DHCP Check to enable		☞ Activate or deactivate the DNS server from DHCP. **On**: Once the DHCP server becomes available, the IP address is automatically applied and the aforementioned menu options are filled out. **Off**: Apply settings manually.

EN

Country-spec. Settings	Level	Display/ Setting	Action in this menu/meaning
	1 2 3 4	Primary DNS & Secondary DNS (optional)	1. Enter IPv4 address of DNS server. 2. Confirm the action field.
	1 2 3 4	Modbus	**NOTE: Opportunity to set the Modbus port.**
	1 2 3 4	Modbus TCP / UDP Activation ☑ Check to enable	☞ Allow Modbus TCP / UDP reading access.
	1 2 3 4	Modbus TCP / UDP Write access ☑ Check to enable	☞ Allow Modbus TCP write access. Enabling the write access allows system critical settings to be changed over Modbus TCP. Really enable write access? ☞ Confirm the action field.
	1 2 3 4	Modbus TCP / UDP Port	☞ Set network port.
	1 2 3 4	MQTT	**NOTE: The MQTT protocol is used to implement the advanced functions between the Segment Controller and the inverter (in particular, firmware updates, distribution of device configurations etc.).**
	1 2 3 4	Broker IP	1. Displays the IP address transmitted by the Segment Controller. . **NOTE: The standard settings allow for successful communication with the Segment Controller.** 2. Confirm the action field.
	1 2 3 4	Broker port	
	1 2 3 4	NTP	**NOTE: An NTP server receives its accurate time information from a precise time source and makes it available to other devices on the network via the NTP protocol.**
	1 2 3 4	NTP Server ☑ Check to enable	1. Obtain server addresses via DHCP or enter them under NTP Server 1&2. Activate server if necessary. 2. Confirm the action field.
	1 2 3 4	NTP server 1	☞ Enter the server address.
	1 2 3 4	NTP server 2	☞ Enter an alternative server address.
	1 2 3 4	RS485 address	**NOTE: Opportunity to parametrise the RS485 interface. The parameters of the RS485 (CON901) are (as with all KACO inverters): 9600 baud, 8n1 and cannot currently be re-configured via the web interface.** **NOTE: The address must not be the same as that of any other device or data logger.** ☞ Assign a unique RS485 bus address to the device. Bus termination is carried out on the HMI board by means of a dip-switch.
		Baud rate ⚙ 9600 *8n1*	☞ Specify transmission and detection intervals.
		Activating the RS485 configuration commands ☑ Check to enable	☞ Activation enables communication via RS485 with a duration of 24 hours. **NOTE: Access is automatically deactivated after 24 hours.** **NOTE: This only affects commands that have been activated by the "**Enable RS485 configuration commands **NOTE: " command. Other commands that are used by meteocontrol, for example, are not affected by this.** ☞ Confirm the action field.

EN

Country-spec. Settings	Level	Display/ Setting	Action in this menu/meaning
		Protocol ⚙ KACO Legacy **or** Modbus RTU	☞ Define communication protocols. **NOTE: The selection ensures that communication can only take place via the existing commands.** ☞ Confirm the action field.
		Modbus RTU	☞ Set network port.
		Modbus RTU Write access ☑ Check to enable	1. Allow Modbus RTU write access. 2. Confirm the action field.
		Features / Functions	**NOTE: Input screens for advanced device functions**
		String Combiner	**NOTE: Opportunity to configure a string combiner.**
		String combiner monitoring ☑ Deactivated | By inverter and segment controller / SCADA system | By Segment Controller / SCADA System	☞ Activate monitoring function if necessary.
		Serial number of assigned string combiner	☞ Enter serial number after installation of the device. **NOTE: The serial numbers of the string combiner that are not connected directly to the device are entered on the segment controller.**
		Baud rate & Number of data acquisition units ⚙ 9600 *8n1*	1. Specify transmission and detection intervals. 2. Enter the number of data acquisition units as necessary.
		⚙Unit address ⚙ Unit channels	1. Specify IP address of the string combiner. 2. Specify the number of monitored strings. 3. Confirm the action field.
		Constant voltage control	**NOTE: Possibility to deactivate the MPP seek mode in order to operate the device with a constant DC voltage.** **NOTE: When the constant voltage control is activated and "Q on Demand" operation is active, there can be feeding back into the PV generator. Please observe the module manufacturer's instructions and approval.**
		Constant voltage mode ☑ Off | On	☞ Activate or disable the constant voltage controller.
		Constant voltage ⚙ / [See section 4 Page 12][V]/ 1 [V]	1. Set value for constant voltage controller. 2. Confirm the action field.
		SPD monitoring	**NOTE: Opportunity to check the overvoltage protection with appropriate status messages**
		SPD monitoring AC SPD monitoring DC ☑ Check to enable	1. Activate overvoltage protection. 2. Confirm the action field.

EN

Country-spec. Settings	Level	Display/ Setting	Action in this menu/meaning
	1 2 3 4	Q on Demand	**NOTE: Only activate the function with the express permission of the network operator. Additional conditions:** **- No PID solution connected to the device.** **- Constant voltage regulator in the device is deactivated**. See table : Configuration via web user interface [Page 69]
	1 3 3 4	Night Shutdown ☑☰ Check to enable	1. "Q on Demand" function is activated by deactivating the night shutdown. 2. Transfer function to memory. 3. Pay attention to the information window and, if necessary, activate the function with the "OK" button. **NOTE: The reactive power settings currently specified are used. Power-dependent functions are not used.** **NOTE: If the AC is disconnected during the night, the function will not be available until the next day.**
	1 2 3 4	Digital Inputs / Outputs	**NOTE: Opportunity to configure the fault signal relay [ERR].**
	1 3 3 4	Relay ☑☰ Positive logic | Negative logic ☑☰ inactive | active	1. Select the type of logic. 2. Select the form of activity. 3. Confirm the action field.
	1 3 3 4	Password protection ☑☰ Check to enable	1. Opportunity to set password protection. 2. Confirm the action field.
	1 3 3 4	String combiner logging interval ⚙ 10 [sec] 1, 5, 10, 15, 30, 60 [min]	☞ Specify the time period between 2 log data recordings.
	1 2 3 4	Firmware update	**NOTE: Opportunity to update the device. Parameter data are not overwritten when the firmware is updated.**
	1 3 3 4	Instant Update	1. Select and confirm the firmware update file with the "Browse..." button 2. Load the firmware with the "Browse" button. 3. Note: During the entire update process, the AC and DC supply of the inverter must be ensured. A loss of supply may damage the device. Continue with update?
	1 3 3 4	Check for Available software packages	↻ Network connection available. 1. Checks for available device updates online using the existing network connection. 2. Start the firmware update by clicking the button.
	1 2 3 4	Settings	**NOTE: Settings for updating the firmware via remote access.**
	1 3 3 4	Allow remote firmware update ☑☰ Status	☞ Activate remote access for updates. Enter `firmware update URL` . 1. Enter `user name` and `password`. 2. Specify the `start` and `end time` for the update. 3. Confirm the action field.

EN

	Service	**NOTE: Opportunity to specify the service interval.**
	Service Log	**NOTE: Display of all logged installations. You should also add all maintenance activities manually via the "Service" and "Installer" interfaces.** 1. Enter additional service activities (exception: "User" interface). 2. Export service logs, if necessary.
	Export Service Package	**NOTE: Opportunity to send an error log to KACO new energy.** ☞ Press the Export button and send the file to our service staff.
	Logging Management	**NOTE: Input screens for log and service data and default settings.**
	Settings	Specify the interval for data capture and base meters.
	User logging interval ⚙ 1 | 5 | 10 | 15 [minutes] / ◦ 5	☞ Specify the time period between 2 log data recordings. **NOTE: Setting and time until memory is overwritten: 1 min – 5 days; 5 min – 4.5 years; 10 min – 9 years; 15 min – 14 years.**
	Service logging interval ⚙ 1 – 120 [sec] / ◦ 10 [sec] /🖴 1	☞ Specify the time period between 2 log data recordings. **NOTE: Setting and time until memory is overwritten: 1 sec – 9 days; 10 sec – 92.5 days; 120 sec – 1110 days**
	DC-DSP logging interval ⚙ 1 – 120 [sec] / ◦ 10 [sec] /🖴 1	☞ Specify the time period between 2 log data recordings. **NOTE: Setting and time until memory is overwritten: 1 sec – 9 days; 10 sec – 92.5 days; 120 sec – 1110 days**
	PCU logging interval ⚙ 1 – 120 [sec] / ◦ 10 [sec] /🖴 1	☞ Specify the time period between 2 log data recordings. **NOTE: Setting and time until memory is overwritten: 1 sec – 9 days; 10 sec – 92.5 days; 120 sec – 1110 days**
	Analyze Log Data	**NOTE: All measurement data can be transferred to a USB stick by making individual and multiple selections.**
	User logs ☑ cosPhi | fac (Hz) | Iac 1 (A) | Iac2 (A) | Iac3 (A) | idc (A) | Qac (var)	1. Select a date in the calendar. 2. Select measurement data from the dropdown field. 3. Update the measurement data. 4. Move the selected measurement data to the storage device or move the data selectively.
EU US - Only Sup. B		☞ **NOTE: Possibility of transferring the live measured values to the KACO portal**
EU US - Only Sup. B	Web portal ☑ Check to enable	☞ Activate transfer permanently.
EU US - Only Sup. B	Logging interval ⚙ 900 – 86400 [s] ◦ 900 [s]	☞ Define measurement interval.
EU US - Only Sup. B	Transfer interval ⚙ 900 – 86400 [s] ◦ 900 [s]	1. Set transfer interval. 2. Confirm the action field.
	Parameter Management	**NOTE: Opportunity to reset set values as well as to import and export specific parameters.**
	Factory setting	1. Compare all parameters/ country-specific parameters /network-specific parameters with basic setting value. 2. If necessary, reset parameters using the "Restore" button.

EN

Export config		1. Exporting parameters for device-independent settings / Export all settings. 2. Select the parameters for export into a file or the plant manager.
Import Configuration		1. Select the parameter file using the "Browse" button. 2. Import the parameters using the "Upload" button.
Password protection Country selection | Connection conditions | Advanced islanding detection | FRT | ... | ... |		1. Opportunity to set up password protection for individual parameters. 2. Confirm the action field.
Installation Wizard		**NOTE:** The installation wizard is described in the chapter [See section 8.4 Page 38]. When the installation process is complete, the following text appears: Installation wizard was completed
Network Statistics		**NOTE: Sent and received data packets indicator** ☞ Press Refresh.
Remote Access		When remote access is enabled, KACO can access the device remotely and assist you. ☞ Activate on request.
History		**NOTE: Displays all of the actions performed in the system and on the web interface.**
Account Management		1. Enter your User name 2. Enter your new user-defined Password **NOTE: The following is specific to KACO: Following initial start-up, it is necessary to change to KACO specific** Change password
Restart the Device		**NOTE: Transfer safety-related parameters to a storage medium.** ☞ If necessary, re-start the device.

NOTE

Validity for associated certificate according to country settings

With regard to the selection of country settings, KACO new energy attests:

1. that the relevant certificates are only valid if the corresponding country settings have been selected.
2. that all configured grid parameters must be configured in accordance with the requirements of the grid operators.
3. that the configuration of parameters using IEEE 1547: 2003 table 1 is possible but is only permitted if it is requested by the grid operators.

NOTE

Validity of the setting values shown

Setting values that follow pictogram ⚙ only refer to the blueplanet 125 TL3/NX3 device type with the "user defined" country setting. For your device, refer to the slider on the web interface.

9.5 Monitoring the device

↻ You have connected the device to your network.

1. When using a DHCP server: Activate DHCP.
2. For manual configuration (DHCP off):
3. Open the Settings/Network menu.
4. Assign a unique IP address.

EN

5. Assign a subnet mask.
6. Assign a gateway.
7. Assign DNS server.
8. Save your settings.

9.6 Performing a firmware update

NOTE

Ensure DC power supply during initial start-up

The DC power supply must be guaranteed during initial start-up. [13]

The sequence of the settings required for initial start-up is pre-set in the configuration assistant.

⚠ CAUTION

Damage to the device from incorrect power supply

The update can fail if the power supply is interrupted during the update process. Parts of the software or of the device itself may be damaged.

1. Never disconnect the DC and AC power supply for or during a firmware update.
2. Do not remove the USB stick during a firmware update.

NOTE

Observe waiting time for firmware update

The firmware update can take several minutes. The "Operating" LED flashes during the update process. The device may restart several times as required.

Performing a firmware update

You can upload the current firmware to the devices directly via the web interface. Refer to the menu items under "`Firmware Update`" See table : Configuration via web user interface [Page 70]

The firmware can be found on the website kaco-newenergy.com under `Downloads` / `Software`.

There is the **option** of updating the firmware at the USB socket of the device. Observe the following procedure:

↻ Ensure that the power supply is connected.
↻ Pay attention to signal elements (LEDs) and statuses during the process.
↻ Note the description of the LED states during the process. [See section 9.2 Page 44]

1. Load the firmware from the KACO website onto a FAT32-formatted USB stick.
2. Insert the USB stick into the USB port of the device.

   ⇨ The update process starts once the firmware has been validated and the status LEDs flash to indicate this.
3. When the status LEDs "Operating" and "Feed-in" LED **flash slowly** at the same time, **remove** the USB stick.
4. Once the update has been successfully completed, all 3 LEDs light up briefly and the device restarts.
5. Remove the USB drive from the USB port.
6. Checking the firmware version on the Info web interface. [See section 9.3 Page 47]
7. When an error occurs, the update process must be repeated.

⇨ Update process completed successfully.

[13] It is only possible to configure the grid parameters with DC voltage. The further parameters can also be configured with a present AC voltage.

EN

NOTE

Firmware update via Muli-function button

In the previous hardware versions, the firmware update was realized via multifunction buttons. This is no longer necessary since firmware version 3.3x and is also no longer possible in this new hardware version.

1. Previous manual versions contain this option. You can find them on our homepage in the respective device folder under Downloads/Archive.

Access to archive folders

↻ You have officially signed up via mykaco.com already registered. If not, please catch up via our link mykacocom-kundenportal.

1. In the login screen, enter your full email address and password.
2. Now check if you have access to the archive folder shown in the graphic.

⇨ In the archive you will find all previous document versions as well as already expired certificates for your device.

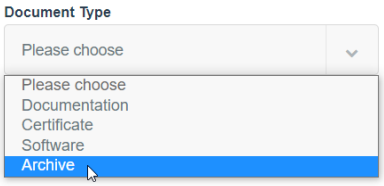

Fig. 65: Archive folder for previous documents

9.7 Access via Modbus

NOTE

Required usage information for remote access

In order to make use of the Modbus functionality, we recommend using the "SunSpec-Modbus-Interface" specification we have made available for the firmware version installed on your device.

Follow the description in the document "Modbus-Protokol.pdf" in order to use the two Excel files with a high level of process reliability.

↻ Firmware version of device is identical to the specifications of the Sunspec® Modbus®.

↻ **NOTE: The device supports MODBUS/TCP and conventional SUNSPEC models. If there are concerns over security, write access can be deactivated.**

1. Enable the entry `Network – Modbus TCP – Operation mode` / `Network services – Modbus TCP – Operation mode` in the menu on the device or on the web interface.
2. If necessary, allow `write access`.
3. Set up the `Port` for access. [Default: `502`]

⇨ Access via Modbus enabled.

EN

10 Specifications

10.1 Reactive power control

Reactive power can be used in electrical energy supply networks to bolster the level of voltage. As such, feed-in inverters can contribute to statistical voltage stability. Reactive power brings about a voltage drop at the inductive and capacitive components of the equipment which can either bolster or reduce the level of voltage. If the generating plant draws inductive reactive power while active power is being fed in, part of the voltage swing caused by the active power feed can be compensated for by the supply of reactive power.

This reactive power mode and the respective control process are specified by the grid operator. If no control process has been specified, then the system should be operated using a reactive power specification of 0%.

10.1.1 Operating power range depending on grid voltage

The device can be operated within the respective fixed voltage range provided. The maximum apparent power is stated in the following table. In the event of undervoltage determined by the maximum continuous current subject to the grid voltage.

The following figures show the reactive power operating range subject to active power and the apparent power operating range depending on the grid voltage for various devices.

Maximum apparent power [p.u.]	**bp 87.0 TL3** Voltage U_N: 380V	**bp 92.0 TL3** Voltage U_N: 400V	**bp 105 TL3** Voltage U_N: 400V	**bp 125 TL3** Voltage U_N: 600V	**bp 137 TL3** Voltage U_N: 600V	**bp 150 TL3** Voltage U_N: 660V	**bp 155 TL3** Voltage U_N: 600V	**bp 165 TL3** Voltage U_N: 630V	**bp 110 TL3 US** Voltage U_N: 270V / 480V	**bp 125 TL3 US** Voltage U_N: 480V
1,10	-	-	-	≥ 600	-	-	-	-	-	-
1,00	≥ 380	≥ 400	≥ 380	545	≥ 600	≥ 660	≥ 590	≥ 630	≥ 480	≥ 475
0,95	361	380	361	520	570	627	560	599	456	450
0,90	342	360	342	492	540	590	530	567	432	430
0,85	323	340	323	464	510	561	502	536	408	404

Tab. 8: Maximum continuous apparent power depending on grid voltage

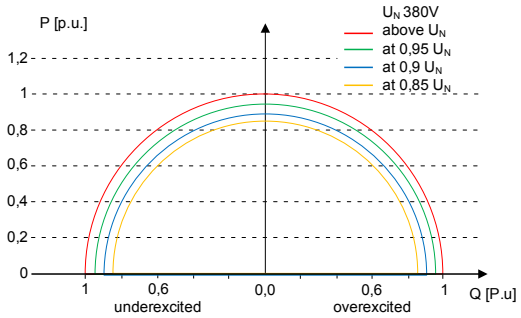

Fig. 66: P-Q operating range for bp 87.0 TL3 (Q_{max}=S_{max})

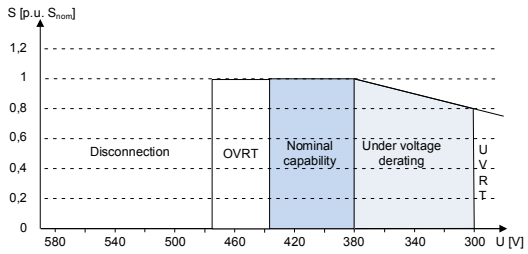

Fig. 67: Apparent power subject to the grid voltage for bp 87.0 TL3

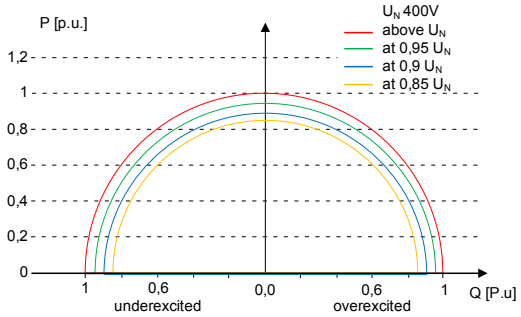

Fig. 68: P-Q operating range for bp 92.0 TL3 (Q_{max}=S_{max})

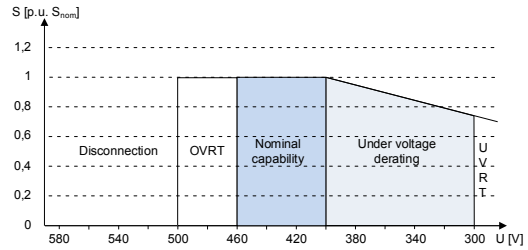

Fig. 69: Apparent power subject to the grid voltage for 92.0 TL3

EN

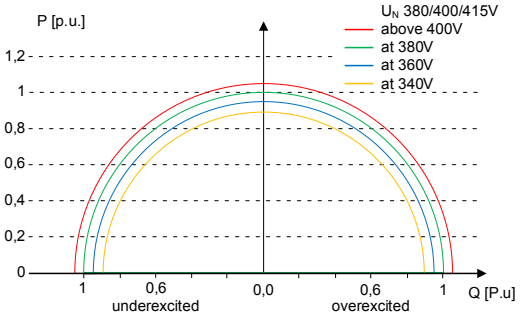

Fig. 70: P-Q operating range for bp 105 TL3 (Q_{max}=S_{max})

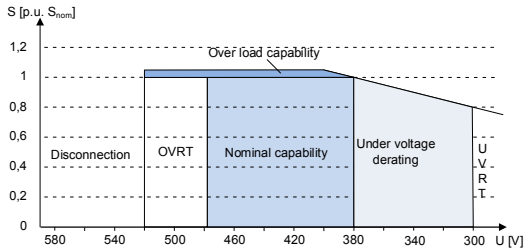

Fig. 71: Apparent power subject to the grid voltage for 105 TL3

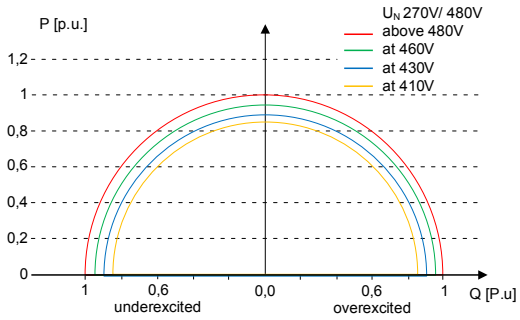

Fig. 72: P-Q operating range for bp 110 TL3 US (Q_{max}=S_{max})

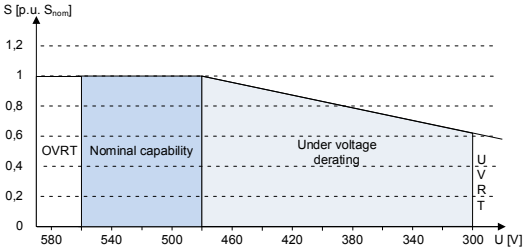

Fig. 73: Apparent power subject to the grid voltage for bp 110 TL3 US

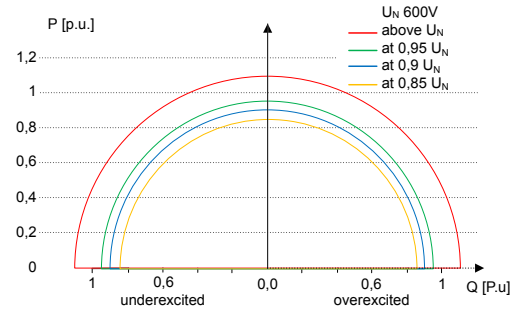

Fig. 74: P-Q operating range for bp 125 TL3 (Q_{max}=S_{max})

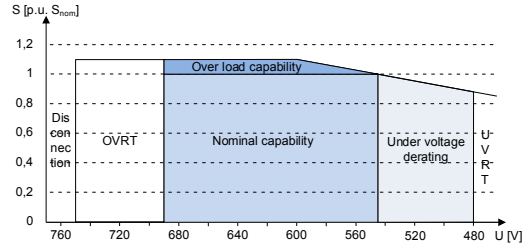

Fig. 75: Apparent power subject to the grid voltage for bp 125 TL3

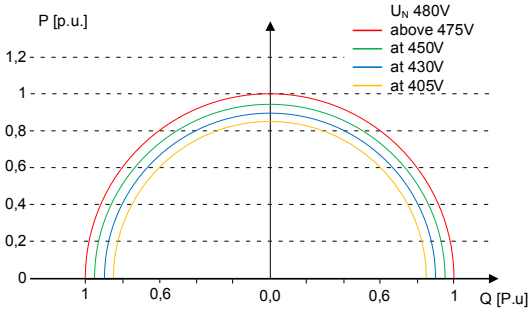

Fig. 76: P-Q operating range for bp 125 TL3 US (Q_{max}=S_{max})

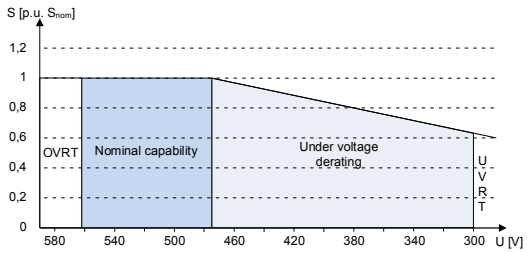

Fig. 77: Apparent power subject to the grid voltage for bp 125 TL3 US

EN

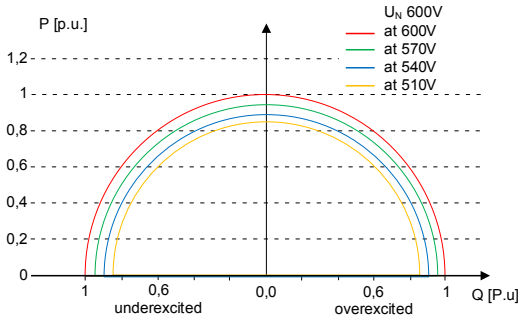

Fig. 78: P-Q operating range for bp 137 TL3 (Q_{max}=S_{max})

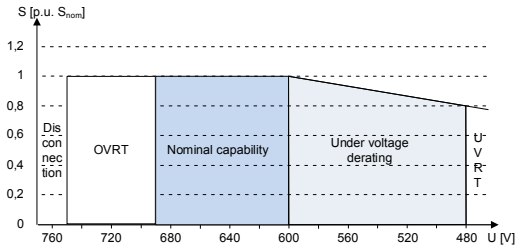

Fig. 79: Apparent power subject to the grid voltage for bp 137 TL3

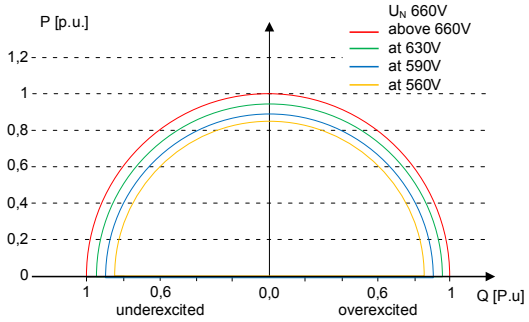

Fig. 80: P-Q operating range for bp 150 TL3 (Q_{max}=S_{max})

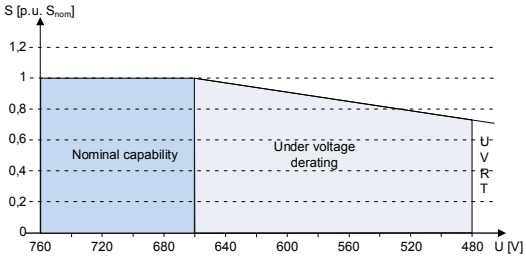

Fig. 81: Apparent power subject to the grid voltage for bp 150 TL3

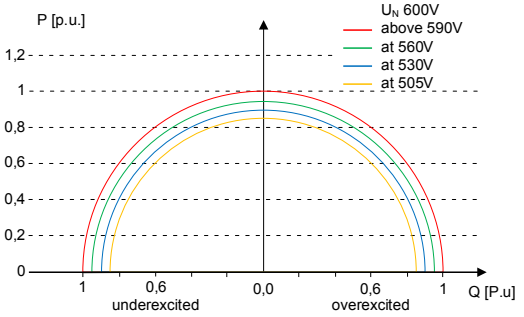

Fig. 82: P-Q operating range for bp 155 TL3 (Q_{max}=S_{max})

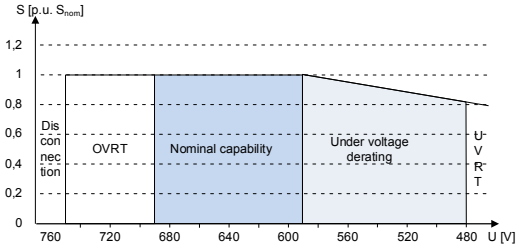

Fig. 83: Apparent power subject to the grid voltage for bp 155 TL3

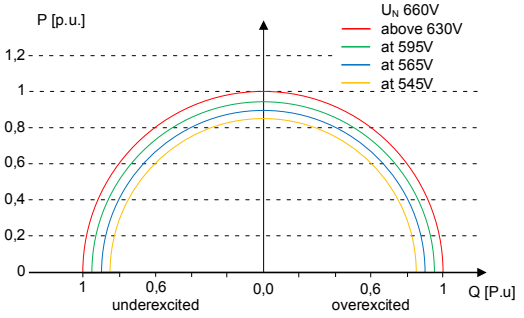

Fig. 84: P-Q operating range for bp 165 TL3 (Q_{max}=S_{max})

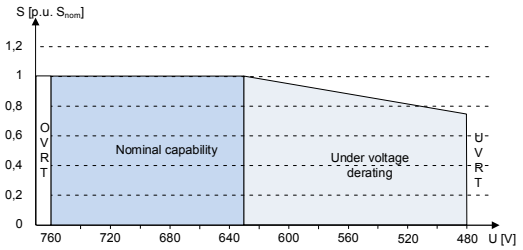

Fig. 85: Apparent power subject to the grid voltage for bp 165 TL3

10.1.2 Dynamics and accuracy

In all control methods the specified target value at the inverter's connection terminals is adjusted using a stationary deviation of the reactive power of maximum 2% S_N. This maximum deviation always relates to the specified value as reactive power.

If the power factor cos ϕ is specified in the control method, then the deviation relates to the reactive power value brought about by the current power level.

EN

The transient response of the control methods is determined by a PT-1 filter. In this case, the settling time corresponds to 5 Tau, or in other words, achieving approx. 99% of the final value for a PT-1 filter. Subject to the control method selected, there are also other parameters that determine dynamic behaviour.

10.1.3 Reactive power functions

The following functions for controlling the reactive power are implemented in the devices listed above:

- cos ϕ constant
- Q constant
- cos ϕ (P)
- Q(U) 10 nodes

NOTE: Reactive power is prioritised in the basic setting in all methods, but this can also be deactivated accordingly. The priority can be selected when using the Q const. and the Q(U) mode. The maximum possible active power that can be fed in is reduced in line with the P-Q operating range when the maximum grid power is reached.

Model	Parameter	Scaling factor	R/RW	Area	Description
126.	ModEna	ModEna	RW	⚙ 0 / 1	The reactive power method selected in the device can only be activated/deactivated indirectly via Sunspec.

cos φ constant

In cos ϕ constant mode, the specified power factor is permanently set by the inverter. In doing so, the reactive power level is set in line with Q=P*tan ϕ as a function of the power that continuously generates the specified power factor. If the setting value is changed, the new value is adopted by way of a filter in a muted manner. The settling time can be parametrised and is 1 s (this corresponds to 5Tau (according to SunSpec, 3Tau would be ideal) with the transient response of a first order filter (PT-1) with a time constant of Tau = 200 ms. The specified power factor can be configured on the display or by way of communication via the KACO RS485 protocol and MODBUS/SunSpec.

If the applicable grid code stipulates that the cos-ϕ should react to the target value slower than the configured Tau = 200 ms by way of a defined gradient or settling time, this gradient or settling time must be implemented in the system control.

Model	Parameter	Scaling factor	R/RW	Area	Description
123.	OutPFSet cos-phi const.	OutPFSet_SF	RW	⚙ 1-0,3 [°]	Set the power factor to a certain % value.
123.	OutPFSet_RmpTms Power gradient increasing & power gradient decreasing		R	⚙ 1 – 65524 [% Slim / min]	Determines the dynamic behaviour in the event of a change in the cos ϕ power factor. The power factor is changed with the specified gradient. **Note**: The gradient is overlaid with the settling time.
123.	OutPFSet_WinTms Settling time	VArPCt_SF	RW	⚙ 1000 – 120000 [ms]	Set the settling time in the event of an abrupt change in the reactive power target value (e.g. caused by a voltage jump).
Not implemented!					
123.	OutPFSet_RvrtTms Timeout		RW	⚙ 0 – 1000 [s]	Specifies the time after which the inverter, if it does not receive a new power factor specification, reverts to the previously applicable reactive power procedure.

Model	Parameter	Scaling factor	R/RW	Area	Description
					If the Timeout is set to 0 seconds, the transmitted power factor specification is permanently retained, even in the event of a communication timeout. Note: when the device is restarted, the timeout is reset to the set fallback time.

Q constant

In Q-constant mode, the specified reactive power value is permanently set by the inverter. If the constant is changed, the new value is adopted by way of a filter in a muted manner. The settling time and the gradient limitation can be configured on the web user interface. The settling time is 1 s with the transient response of a first-order filter (PT-1) with a time constant of Tau = 200 ms. The specified reactive power can be configured on the display or by way of communication via the KACO RS485 protocol and MODBUS/SunSpec.

If the applicable grid code stipulates that the reactive power should react to the target value slower than the configured Tau = 200 ms by way of a defined gradient or settling time, this gradient or settling time must be implemented in the system control.

Model	Parameter	Scaling factor	R/RW	Area	Description
123.	VArWMaxPct Q constant	VArPCt_SF	RW	0-100 [$\%_{Pmax}$]	The setpoint of the reactive power can be adjusted depending on the set maximum active power.
123.	VArPct_RvrtTms Timeout		RW	0 – 1000 [s]	Specifies the time after which the inverter, if it does not receive a new reactive power specification, reverts to the previously applicable reactive power procedure. If the Timeout is set to 0 seconds, the transmitted reactive power specification is permanently retained, even in the event of a communication timeout. Note: when the device is restarted, the timeout is reset to the default value.
123.	VArPct_RmpTms Output gradient increase & Output gradient decrease		R	1 – 65524 [% Slim / min]	Determines the dynamic behaviour in the event of a change in the reactive power value. The reactive power is changed with the specified gradient. **Note:** The gradient is overlaid with the settling time.
123.	VArPct_RmpTms Settling time		RW	1000 – 120000 [ms]	Determines the dynamic behaviour in the event of a change in the active power set value. The active power is changed according to a PT-1 characteristic curve with a settling time of 5 Tau. **NOTE: The settling time is overlaid with the increasing and decreasing gradient.**

cos φ(P)

In the cos ϕ (P) operating mode, the setpoint value of cos ϕ and the setpoint for the reactive power derived from it are continuously calculated depending on the actual power level. This function ensures that grid support is provided by the reactive power when a significant voltage boost is anticipated due to a high feed level. In this case, a characteristic curve is specified which can be used to configure up to 10 nodes, value pairs for active power and cos ϕ. The active power is entered as a % in relation to the set maximum apparent power Slim. Other parameters allow you to limit functionality and to limit activation to certain voltage ranges.

EN

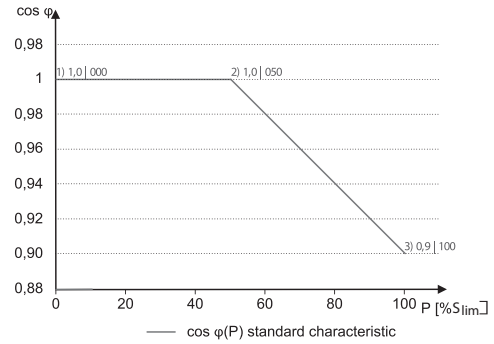

Fig. 86: cos ϕ (P) standard characteristic curve with 3 nodes

Q(U) 10 nodes

When it comes to mode Q(U), the nominal value of the reactive power is continuously calculated depending on the grid voltage. This function ensures that grid support is provided by the reactive power as soon as the voltage actually deviates from the target voltage. In this case, a characteristic curve is specified which can be used to configure up to 10 nodes, consisting of value pairs for voltage and reactive power. Other parameters allow you to limit functionality and to limit activation to certain voltage ranges as well as parametrise the transient response.

The zero sequence voltage is used to calculate the reactive power target for three-phase units.

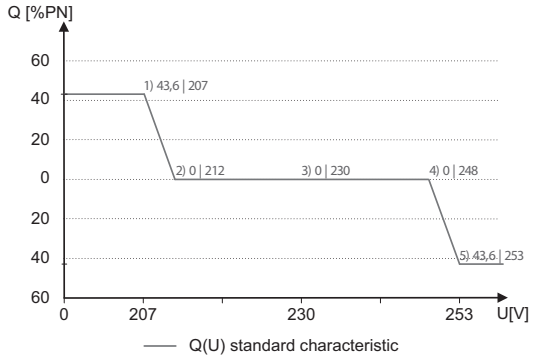

Fig. 87: Q(U) standard characteristic curve with 5 nodes

10.1.4 Parameters for reactive power control

Country-spec. Settings	Menu level	Display/ Setting	Action in this menu/meaning
		Mode ☑☰ Specification cos-phi | Specification Q | Cos-phi(P/Plim) | Q(U) |	Select the active method for reactive power control and define the parameters in the respective method.
		Cos-phi constant	
		Cos-phi constant ⚙ 0.3 – 1 / ◉ 1 / ◠ 0.001	Specified power factor.
		☑☰ Over-excited | under-excited	Reactive power mode: Under-excited relates to inductive load, over-excited relates to capacitive load.

EN

Country-spec. Settings	Menu level	Display/ Setting	Action in this menu/meaning
		Power gradient increasing & power gradient decreasing ⚙ 1 – 65534 [% S_{lim}/min] / ◦ 65534 [% S_{lim}/min] / 1	Maximum change in the reactive power %S_{lim}/min in the event of a change to overexcited mode. **NOTE: The gradient is overlaid with the settling time.**
		Settling time ⚙ 1000 – 120000 [ms] / ◦ 1000 [ms] / 10	Determines the dynamic behaviour in the event of a change in the cos ϕ set value. With a reactive power change, the cos ϕ is changed according to a PT-1 characteristic curve with a settling time of 5 Tau.
		Q constant	
		Q constant ⚙ 0 – 100 [% Slim] / ◦ 0 [% Slim] / 0.1	Set as a percentage of the maximum reactive power.
		Under-excited | over-excited	Reactive power mode: Under-excited relates to inductive load, over-excited relates to capacitive load.
		Output gradient increase & Output gradient decrease	In addition to configuring the dynamic behaviour using the setting time corresponding to a first-order filter, the reactive power setting can be determined by a maximum gradient – this means the maximum change in the reactive power per time period.
		increasing | decreasing ⚙ 1 – 65534 [% S_{lim}/min] / ◦ 65534 [% S_{lim}/min] / 1	Maximum change in the reactive power %S_{lim}/min in the event of a change to overexcited mode **NOTE: The gradient is overlaid with the settling time.**
		Settling time ⚙ 1000 – 120000 [ms] / ◦ 1000 [ms] / 10	Determines the dynamic behaviour in the event of a change in the Q target value. With a change of the reactive power or the lock-in and lock out voltage, the Q is changed according to a PT-1 characteristic curve with a settling time of 5 Tau.
		Cos-phi(P)	
		Lock-in voltage 10 – 126.6 [% Unom] / ◦ 80 [% Unom] / 1 [0.1]	The control is activated above this voltage.
		Lock-out voltage ⚙ 10 – 126.6 [% Unom] / ◦ 80 [% Unom] / 0.1	The control is deactivated below this voltage.
		Power gradient increasing & power gradient decreasing ⚙ 1 – 65534 [% S_{lim}/min] / ◦ 65534 [% S_{lim}/min] / 1	Maximum change in the reactive power %S_{lim}/min in the event of a change to overexcited mode. **NOTE: The gradient is overlaid with the settling time.**

EN

Country-spec. Settings	Menu level	Display/ Setting	Action in this menu/meaning
		Settling time ⚙ 1000 – 120000 [ms] / ◦ 5000 [ms] / ◠ 10	Determines the dynamic behaviour in the event of a change in the cos ϕ set value. With a change of the active power or the lock-in and lock out voltage, the cos ϕ is changed according to a PT-1 characteristic curve with a settling time of 5 Tau.
		Number of nodes ⚙ 2 – 10	Specify the number of nodes for the cos ϕ/(p/pn) characteristic curve.
		Number of nodes ⚙ 2 – 10	Specify the number of nodes for the Q(P) characteristic curve.
		1. node … 10. node ⚙ 0 V – Max. voltage in continuous operation	Power of the node as a percentage of the maximum power. For the 1st node, the power must be 0%; for the last node, the power must be 100%. The power values of the nodes must increase continuously. Note: Storage inverters only for feed-in operation
		⚙1 – 0.3 / ◦ 1 / ◠ 0,001	Reactive power of the node as a percentage of the maximum power.
		⚙ Over-excited | under-excited	Reactive power mode: Under-excited relates to inductive load, over-excited relates to capacitive load.
		Q(U) 10 nodes	
		Lock-in power ⚙ 0 – 100 [% S_{lim}] / ◦ 20 [% S_{lim}] / ◠ 1	Power threshold, function is activated if limit value is exceeded.
		Lock-out power ⚙ 0 – 100 [% S_n] / ◦ 5 [% S_n] / ◠ 1	Power threshold, function is activated if limit value is undershot.
		Lock-In time ⚙ 0 – 60000 [ms] / ◦ 30000 [ms] / ◠ 1000 [ms]	Length of time that the active power must remain below the lock-in power level before control is deactivated.
		Lock-Out time ⚙ 0 – 60000 [ms] / ◦ 30000 [ms] / ◠ 1000 [ms]	Length of time that the active power must remain below the lock-out power level before control is deactivated.
		Downtime ⚙ 0-10000 [ms] / ◦ 0 [ms] / ◠ 1	If the voltage switches from a characteristic curve section with Q=0 to a characteristic curve section with Q≠0 under active control, then the reactive power setting process is delayed by the set dead time. Once the dead time has expired, the control circuit is no longer subject to a delay and the set setting time determines the transient behaviour.
		Output gradient increase & Output gradient decrease ☑ increasing | decreasing ⚙ 1 – 65534 [% S_{lim}/min] / ◦ 65534 [% S_{lim}/min] / ◠ 1	In addition to configuring the dynamic behaviour using the setting time corresponding to a first-order filter, the reactive power setting can be determined by a maximum gradient – this means the maximum change in the reactive power per time period. Maximum change in the reactive power %S_{lim}/min in the event of a change to overexcited mode **NOTE: The gradient is overlaid with the settling time.**

EN

Country-spec. Settings	Menu level	Display/ Setting	Action in this menu/meaning
		Settling time ⚙ 1000 – 120000 [ms] / ◦ 2000 [ms] / ◠ 10	Settling time in the event of an abrupt change in the reactive power target value (e.g. caused by a voltage jump). The transient behaviour corresponds to a first-order filter (PT-1) with setting time = 5 Tau. **NOTE: The settling time is overlaid with the increasing and decreasing gradient.**
		Min. cos-phi Q1 - Min. cos-phi Q4 ⚙ 0 – 1 / ◦ 0 / ◠ 0,001	In the event of a significant voltage deviation, the maximum reactive power adjustment range can be limited by a minimum cos ϕ in order to prevent an excessive reactive power supply and, as a result, a significant reduction in the maximum active power that can be fed in.
		Q1	Minimum cos ϕ in overexcited operating mode (in-feed).
		Q4	Minimum cos ϕ in underexcited operating mode (in-feed).
		Q2	Minimum cos ϕ in overexcited operating mode (charge).
		Q3	Minimum cos ϕ in underexcited operating mode (charge).
		Voltage dead band ⚙ 0 – 5 [% Uref] ◦ 0.0 ◠ 0.1	The control is activated above this voltage.
		Q(U) Offset (temporary) U offset ⚙ -100 -100 [% Slim] / ◦ 0.0 [% Slim] / ◠ 0.1 Q offset ⚙ -100 -100 [% Slim] / ◦ 0.0 [% Slim] / ◠ 0.1	Power threshold, function is activated if limit value is exceeded.
	1 2 3 4	Q minimum ⚙ 0 – 100 [% Slim] / ◦ 0 [% Slim] / ◠ 0.1	☞ Set the reactive power Q to a minimum value.
		⚙ Under-excited | over-excited	☞ Select the type of phase shift. **NOTE: Under-excited relates to inductive load, over-excited relates to capacitive load.**
	1 2 3 4	Q maximum ⚙ 0 – 100 [% Slim] / ◦ 0 [% Slim] / ◠ 0.1	☞ Set the reactive power Q to a maximum value.
		⚙ Under-excited | over-excited	☞ Select the type of phase shift. **NOTE: Under-excited relates to inductive load, over-excited relates to capacitive load.**
US, UD		Autonomous adjustment Vref	The autonomous adjustment of the reference voltage enables a dynamic reactive power function. As a result, the reference voltage of the Q(U) characteristic curve is dynamically adjusted to the grid voltage via a PT1 filter.
US, UD		Time constant Vref adjustment ⚙ 300 – 5000 [s] ◦ 300 s	The time constant defines the control speed at which the reference voltage of the Q(U) characteristic curve is equalised to the grid voltage.

EN

Country-spec. Settings	Menu level	Display/ Setting	Action in this menu/meaning
		Priority mode ☑ Q priority | P priority	P-priority can be selected as an alternative to the standard setting Q-priority. When it comes to P-priority, the reactive power adjustment range is limited subject to the limited apparent power of the inverter and the active power that is currently available and fed in.
		Active curve ⚙1 – 4 / curve 1 TMP / curve 2 / curve 3 / curve 4	Up to four characteristic curves can be configured independently and one of them can be activated for regulation each time.
		Number of nodes ⚙ 2 – 10	Specify the number of nodes for the Q(U) characteristic curve.
		1. node … 10. node ☑ **Power** | Voltage | Excitation ⚙ 0 – 100 [% S_{lim}] / ⚬ 43.6 [% S_{lim}] / ◠ 0.1	Power of the node as a percentage of the maximum power. For the 1st node, the power must be 0%; for the last node, the power must be 100%. The power values of the nodes must increase continuously.
		☑ Power | **Voltage** | Excitation ⚙ 0 – 125 [% S_{lim}] / ⚬ 43.6 [% U_{nom}] / ◠ 0.1	Voltage of the node in volts The voltage values of the nodes must increase continuously. At voltages below the 1st node and voltages above the last node, the reactive power value of the 1st or last node is used each time.
		☑ Power | Voltage | **Excitation** ⚙Over-excited | under-excited	Reactive power mode: Under-excited relates to inductive load, over-excited relates to capacitive load.

10.2 Active power regulation

Dynamics / accuracy

In all of the control methods described below the specified target value at the inverter's connection terminals is adjusted using a stationary deviation of the reactive power of maximum 2% S_N.

The transient response of the control methods is determined by a PT-1 filter. In this case, the settling time corresponds to 5 Tau, or in other words, achieving approx. 99% of the final value for a PT-1 filter. Subject to the control method selected, there are also other parameters that determine dynamic behaviour.

Methods for active power regulation

Methods for regulating the active power of feed-in inverters may be necessary for local management of load flows, for voltage stability in the distribution network and for ensuring the stability of the interconnected grid.

The device makes use of the following functions in order to regulate the active power. These are described in the following section:

- P target value (MPPT(communication)) [See section 10.2.1 Page 84]
- P limit (communication) [See section 10.2.2 Page 85]
- P(U) (characteristic curve) [See section 10.2.3 Page 85]
- P(f) (characteristic curve) [See section 10.2.4 Page 87]

10.2.1 P target value

The function "P target value" is integrated into the MPP tracking of the inverter on all PV inverters. The P target value is continuously re-calculated on the basis of the MPP tracking algorithm.
The model 704 (DER AC Controls) also fulfils the current market requirements.

EN

10.2.2 P limit

The function "P limit" is available for limiting the maximum feed-in power. If necessary, this can be used to reduce the maximum possible feed of an inverter, e.g. for managing bottlenecks for the operator of the distribution grid.

P limit is only available via the MODBUS/SunSpec inverter model 123 `Immediate Inverter Controls` and via RS485 communication. You can find detailed information on the communication protocol at www.kaco-newenergy.de in the "Software" subsection of the "Downloads" section.

When a target value is received for P limit, the output power of the inverter is limited to the specified power value. If the limit value is changed, the new value is adopted by way of a filter and a gradient limitation. The current power may be below the specified limit value because the available power (PV) or the target power value (storage) may be below the specified limit value. Depending on the inverter series, the settling time and gradient limitation may be adjustable.

Model	Parameter	Scaling factor	R/RW	Area	Description
123	`WMaxLimPct` Power Limitation	`WMaxLimPct_SF`	RW	0 – 100 [%]	Set the power limitation to a certain % value.
123	`WMaxLimPct_RvrtTms` Timeout		RW	0 – 1000 [s]	Specifies the time after which the inverter, if it does not receive a new power limitation, will cancel it. If the `Timeout` is set to `0` seconds, the transmitted power limitation is permanently retained, even in the event of a communication timeout. Note: when the device is restarted, the `timeout` is reset to the default value.
123	`WMaxLimPct_RmpTms` Output gradient increase		RW	1 – 65534 [% S_{lim}/min]	Determines the dynamic behaviour in the event of a change in the active power set value. The active power is changed with the specified gradient. **NOTE: The gradient is overlaid with the settling time.**

If the applicable grid connection guidelines call for the active power to be adjusted to the target value with a defined gradient or a defined settling time, then the device can be configured in such a way that this gradient is adhered to. In addition, the gradient can also be implemented on the plant controller. This second solution is to be used for all other inverters.

10.2.3 Voltage-dependent power reduction P(U)

If it is not possible to compensate adequately for increase in voltage in the upstream distribution network by intake on reactive power, it may be necessary to curtail the active power. In this case, P(U) control is available for making optimum use of the capacity of the upstream grid.

P(U) control reduces the active power that is fed in as a function of the grid voltage using a prescribed characteristic curve as a basis. P(U) control is implemented as an absolute power limit. The actual power of the inverter may vary freely below this limit due to a possible fluctuation in the available power or the target value, but at no time increases above the absolute power limit.

[See figure 88 [▶ Page 86] and [See figure 89 [▶ Page 86] are two examples of configuration. In figure 1 without hysteresis, the function is activated as soon as the voltage exceeds the configured voltage of data point 1 (dp1). The power limit follows the characteristic curve, a straight line between dp1 and dp2. The function is deactivated as soon as the voltage falls below dp1. In [See figure 89 [▶ Page 86], the function is activated as soon as the voltage exceeds the configured voltage of dp2. In this case, dp1 does not result in activation of the function because the power limit remains at 100%. The power limit follows the characteristic curve, a straight line between dp2 and dp3. However, because hysteresis is activated, the power limit is not increased when the voltage drops. The function is deactivated as soon as the voltage falls below dp1.

EN

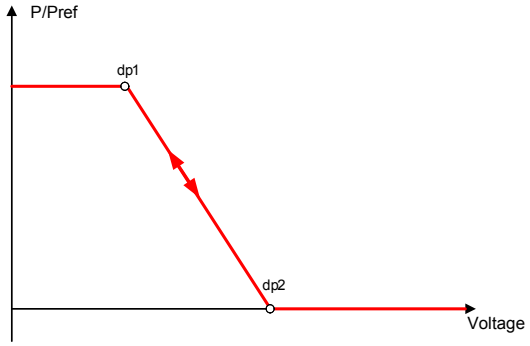

Fig. 88: Example characteristic curve without hysteresis

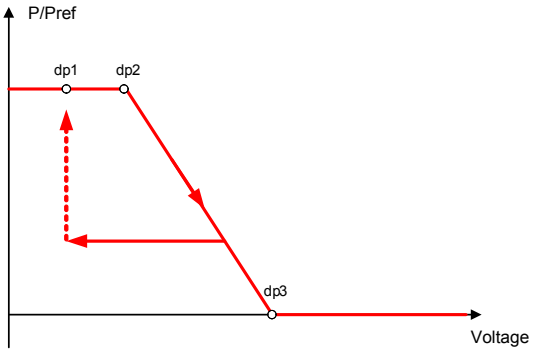

Fig. 89: Example characteristic curve with hysteresis and a deactivation threshold below the activation threshold

10.2.3.1 Parameters for P(U)

Country-spec. Settings	Menu level	Display/ Setting	Action in this menu/meaning
	1 2 3 4	Operation mode ☑☰ Off | On	☞ Activate the control process. **Off**: Deactivates dynamic grid support using dynamic reactive current. Dynamic grid support remains active on account of immunity to interference.
		Reference power ☑☰ Actual power | Nominal power	Specifies the power reference for the characteristic curve. 100 % here corresponds to the nominal power or the actual power at the time the function was activated, the time when the voltage passes the configured node.
	1 2 3 4	Evaluated voltage ☑☰Maximum phase voltage | Positive phase sequence voltage	☞ Select the voltage to be rated. Specifies which voltage is evaluated in a three-phase system.
		Hysteresis mode ☑☰ Off | On	**Off:** In non-hysteresis mode, the active power is increased immediately with dropping voltage. **On:** In hysteresis mode, the power is not increased with dropping voltage. .
		Deactivation gradient ⚙ 0 – 65534 [% / min] / ◦ 100 [% / min] / ◠ 1	If the available power is above the actual output at the time of deactivation, the power increase back to the maximum power is limited. The limitation is implemented by an absolute power limitation that increases with a continuous gradient up to the maximum power. The actual power of the inverter may vary freely below this limit due to a possible fluctuation in the available power or the target value, but at no time increases above the absolute power limit.
		Deactivation time ⚙ 0 – 60000000 [ms] / ◦ 100 [ms] / ◠ 1	Only evaluated with activated hysteresis mode: Monitoring time during which the voltage must remain below the lowest configured node before the function is deactivated.
		Output gradient limitation increase & Output gradient limitation decrease ⚙ 1 – 65534 [% / min] / ◦ 65534 [% / min] / ◠ 1	Specifies the dynamic response on changing the active power for power increase. With a voltage change, the active power is changed with the specified gradient. The gradient is overlaid with the settling time. Specifies the dynamic response on changing the active power for power decrease. With a voltage change, the active power is changed with the specified gradient. The gradient is overlaid with the settling time.

EN

Country-spec. Set-tings	Menu level	Display/ Setting	Action in this menu/meaning
		Settling time ⚙ 1000 – 120000 [ms] / ◦ 2000 [ms] / ⏠ 10 [ms]	Determines the dynamic behaviour in the event of a change in the active power set value. With a voltage change, the active power is changed according to a PT-1 characteristic curve with a settling time of 5 Tau. **Note:** The settling time is overlaid with the increasing and decreasing gradient.
	1 2 3 4	Active curve ⚙ 1 – 5	☞ Select active curve. **NOTE: Up to 5 characteristic curves can be configured independently and one of them can be activated for regulation each time.**
		Number of nodes ⚙ 2-5 Power ⚙ 0.0 – 100.0 [% P_{ref}] / ◦ 100.0 [% P_{ref}] / ⏠ 0.1 Voltage ⚙ 80.0 – 126.0 [% U_{nom}] / ◦ 112.0 [% U_{nom}] / ⏠ 0.1	up to 5 support points definable The power value of the first and last value pair is also used as the maximum or minimum active power value that is valid across the limits of the characteristic curve.

10.2.4 P(f)

Adjusting the active power P(f) in the event of overfrequency

Feed-in inverters must assist with frequency stability in the grid. If the grid frequency leaves the normal tolerance range (e.g. ±200 mHz), then the grid will be in a critical state. In the event of overfrequency, there is a generation surplus, in the event of underfrequency, there is a generation deficit.

PV systems must adapt their feed-in power relative to the frequency deviation. In the event of overfrequency, the power adjustment is determined by a maximum feed-in limit. The actual power of the inverter may vary freely below this limit due to a possible fluctuation in the available power or the target value, but at no time increases above the absolute power limit.

$$P_{max-limit} = P_M + \Delta P$$

Fig. 90: Equation 1

$$\Delta P = g \cdot P_{ref} \cdot (f_1 - f)$$

Fig. 91: Equation 2

Equation 1 [See figure 90 [▶ Page 87] defines the maximum limit with ΔP according to Equation 2 [See figure 91 [▶ Page 87], P_M the actual power at the moment of activation and P_{ref} the reference power. In the case of PV inverters from KACO, P_{ref} is defined as P_M, the current power at the time of activation. f is the current frequency and f_1 is the specified activation threshold.

$$\Delta P = \frac{1}{s} \times \frac{(f_1 - f)}{fn} \times Pref$$

Fig. 92: Equation 3

$$g = \frac{1}{s \cdot f_n}$$

Fig. 93: Equation 4

In some standards, the power adjustment is specified by a drop (s) instead of a gradient (g), as shown in equation 3 [See figure 92 [▶ Page 87]. The drop s can be transformed into a gradient g in accordance with equation 4 [See figure 93 [▶ Page 87].

EN

The frequency f remains above the activation threshold f_1 during an overfrequency incident. Consequently, the expression (f_1 – f) is negative and ΔP corresponds to a reduction in the feed-in power.

The measurement accuracy of the frequency is greater than 10 mHz.

The specific mode of operation of the function is specified by the grid operator or the pertinent standards or the grid connection guidelines. The configurability of the function makes it possible to satisfy a wide variety of standards and guidelines. Certain configuration options are not available in some country settings because the pertinent standards or grid connection guidelines prohibit adjustments.

Adjusting the active power P(f) in the event of underfrequency

Some grid connection guidelines also require adjustment of the active power P(f) in the event of underfrequency. Due to the fact that PV systems are typically run at the maximum power point, there are no power reserves for increasing the power in the event of underfrequency.

However, in the event that the system power is reduced due to market regulation, it is possible to increase the active power up to the power level available. Because the inverter is unable to distinguish between P constant target values for obligatory bottleneck management by the grid operator and for market regulation, this needs to be implemented in the site-specific infrastructure of system control.

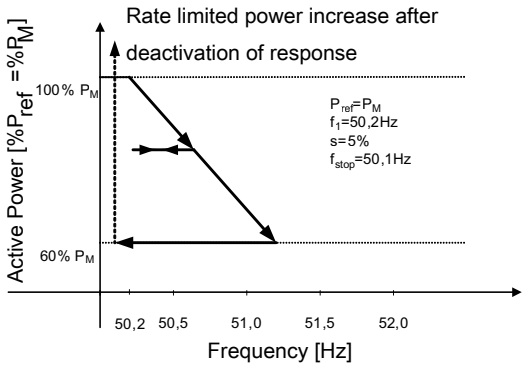

Fig. 94: Example behaviour with hysteresis (mode 1)

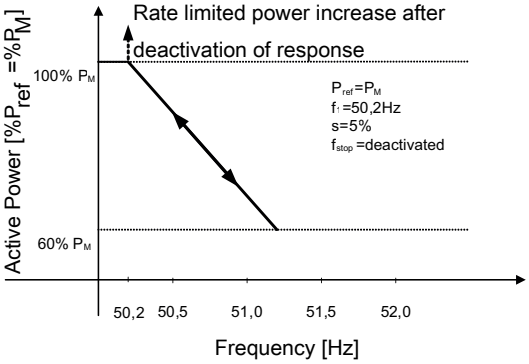

Fig. 95: Example behaviour without hysteresis (mode 2)

10.2.4.1 Parameters for P(f)

Country-spec. Settings	Menu level	Display/ Setting	Action in this menu/meaning
		P(f) operation mode ☑☰ Off | Mode 1 | Mode 2 | Mode 3	Activate or deactivate function. **Mode 1:** With hysteresis activated – Limit **Mode 2:** Without hysteresis activated – Limit **NOTE: In mode 1 & 2, the power below or above the characteristic curve (depending on over- or underfrequency) is adjusted via a Pset command. Plim can also limit the power with an active P(f) characteristic curve.** **Mode 3:** Without hysteresis activated – Set **NOTE: In mode 3, the pre-fault power is stored and the power moves along this characteristic curve.**
	1 2 3 4	Dynamic gradient mode ☑☰ ON | OFF	☞ Activate dynamic gradient. **NOTE: Gradient "Feed-in/charging with over/under frequency" is not displayed.**

EN

Country-spec. Settings	Menu level	Display/ Setting	Action in this menu/meaning
		Maximum dynamic gradient frequency ⚙ 50.22 – 70.5 [Hz] 🖳 0.01 [Hz] Minimum dynamic gradient frequency ⚙ 45 – 50 [Hz] 🖳 0.01 [Hz]	**Dynamic gradient maximum frequency:** If dynamic gradient mode is activated, the gradient is calculated in order to guarantee a linear power adjustment and reach the maximum charging power if the frequency rises to the maximum configured frequency. **Dynamic gradient minimum frequency:** If dynamic gradient mode is activated, the gradient is calculated in order to guarantee a linear power adjustment and reach the maximum feed-in power if the frequency drops to the minimum configured frequency.
		Activation threshold at underfrequency ⚙ 40 – 50 [Hz] / ◦ 40 [Hz] / 🖳 0.01 Activation threshold at overfrequency ⚙ 50 – 60 [Hz] / ◦ 50.02 [Hz] / 🖳 0.01	**Activation threshold (f1) underfrequency:** Determines the frequency threshold for activating the function in case of underfrequency incidents. The active power adjustment is activated if the frequency falls below the configured value and mode 1 or 2 is activated. In mode 2, the function is deactivated if the frequency rises above the configured value. **Activation threshold (f1) overfrequency:** Determines the frequency threshold for activating the function in case of overfrequency incidents. The active power adjustment is activated if the frequency rises above the configured value and mode 1 or 2 is activated. In mode 2, the function is deactivated if the frequency falls below the configured value.
		Threshold Area Lower limit [Hz] ⚙ 40 – 50 [Hz] / ◦ 47.5 [%/Hz] / 🖳 0.01	Only evaluated in mode 1. The function is deactivated if the frequency returns to the deactivation range and remains in this range for the duration of the deactivation time.
		Threshold Area Upper limit [Hz] ⚙ 50 – 60 [Hz] / ◦ 50.5 [%/Hz] / 🖳 0.01	
		P(f) deactivation time ⚙ 0 – 6000000 [ms] / ◦ 0 [ms] / 🖳 1	Only evaluated in mode 1. The function is deactivated if the frequency returns to the range between the minimum and maximum deactivation threshold and remains in this range for the duration of the deactivation time.
		Deact. lim. time after fault ⚙ 0 – 1000 [s] / ◦ 0 [ms] / 🖳 1000 [s]	Only evaluated in mode 2&3. After the end of the fault, the change in active power is limited to the set gradient for the specified time.
		Deact. grad. incr. after fault & Deact. grad. decr. after fault ⚙ 0 – 65534 [% / min] / ◦ 10 [% / min] / 🖳 1	Specifies the dynamic response on changing the active power for power increase and power decrease. Any change in active power is limited to the set value for the set duration.

EN

Country-spec. Settings	Menu level	Display/ Setting	Action in this menu/meaning
		P(f) intentional delay ⚙ 0 – 5000 [ms] / ◦ 0 [ms] / 🕭 1	The activation of the function based on the activation threshold is delayed by the configured time. Note 1: This function is regarded as critical for the stability of the transmission grid and is therefore prohibited by several national grid connection regulations. Note 2: This function is stipulated as a requirement by some domestic grid connection directives in order to prevent any negative impact on island detection. However, P(f) has no negative impact on KACO's enhanced island detection.
		P(f) settling time ⚙ 200 – 2000 [ms] / ◦ 200 [ms] / 🕭 1	Determines the dynamic behaviour in the event of a change in the active power limit. In the event of a change in frequency, the active power is altered subject to a PT-1 characteristic curve using a settling time of 5 Tau. The settling time is overlaid with the increasing and decreasing gradient.
		Output gradient limitation increase & Output gradient limitation decrease ⚙ 0 – 65534 [% / min] / ◦ 65534 [% / min] / 🕭 1	Specifies the dynamic response on changing the active power for power increase and decrease. With a voltage change, the active power is changed with the specified gradient. **Note:** The gradient is overlaid with the settling time.
		P(f) deactivation gradient ⚙ 0 – 65534 [%S_{max} / min] / ◦ 10 [% S_{max} / min] / 🕭 1	If the available power is above the actual output at the time of deactivation, the power increase back to the maximum power is limited. The limitation is implemented by an absolute power limitation that increases with a continuous gradient up to the maximum power. The actual power of the inverter may vary freely below this limit due to a possible fluctuation in the available power or the target value, but at no time increases above the absolute power limit.

10.3 FRT

Dynamic grid support (Fault Ride Through)

A generation plant's ability to remain immune to voltage drops and voltage spikes in the supply system is a key element in establishing a reliable energy supply. Immunity to interference ensures that brief disruptions do not result in a loss of generation capacity in a larger range of an interconnected grid. Grid support by a fast feeding of residual current also limits the spatial extent of the incident.

With its dynamic grid support by way of immunity, the device has this characteristic. The ability to remain on the grid is particularly relevant. The protective settings also determine the device's ability to remain on the grid or not. Protective settings take the upper hand over the capacity of immunity to interference.

10.3.1 Dynamic grid support by way of immunity to interference

Interference immunity against undervoltage

Voltage drop above the limit curve (see figure below) can be overcome without the need for shutdown from the grid. The feed-in power remains constantly within the limits of the maximum continuous current of the inverter.

If a reduction in power occurs, the power is brought back up to the pre-fault level within 100 ms of the voltage returning.

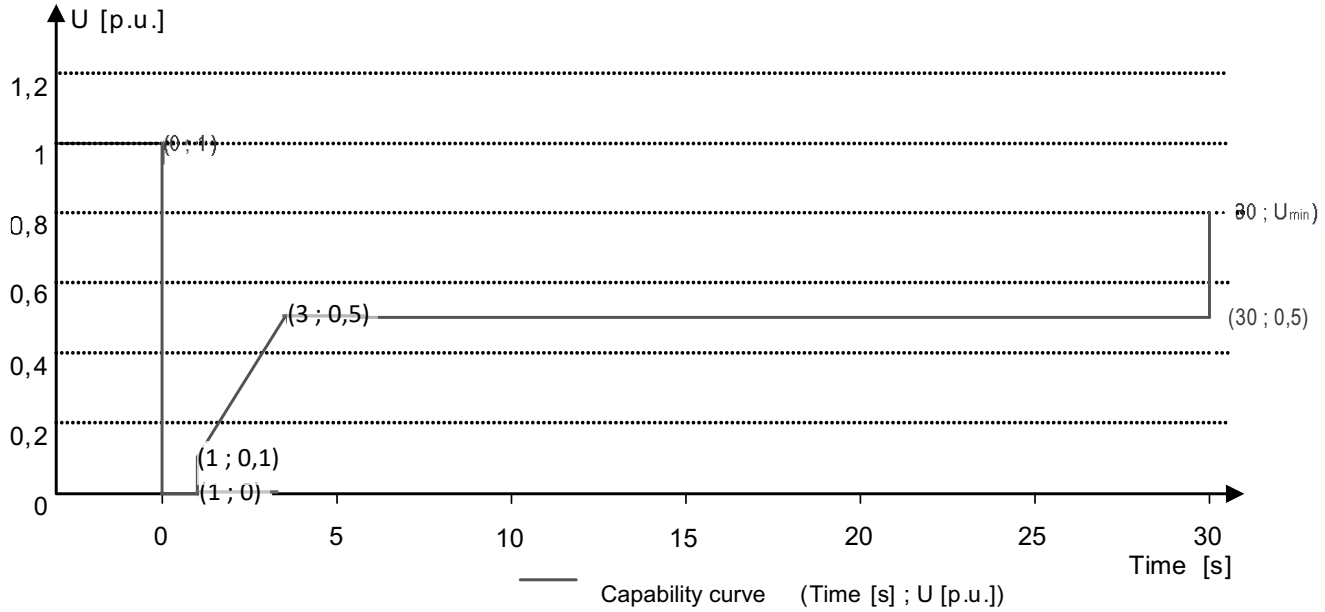

Fig. 96: Immunity to interference characteristic curve relative to the nominal voltage

The inverters can ride through voltage fluctuations as long as the voltage level does not remain above the continuous operating voltage range for more than 100 s and does not exceed the short-term maximum operating voltage range (up to 100 s). The specific values for each inverter can be found here.

The interface protection (voltage, frequency, anti-islanding) integrated in the inverter can be set within a range that permits the above behaviour. However, if the interface protection setting limits the voltage-time characteristic curve, then the interface protection will trip and interrupt the ride-through as configured.

10.3.2 Dynamic grid support using a fast feeding of residual current

When dynamic grid support using a fast feeding of residual current is activated, then residual current is fed in in addition to the immunity to interference properties against drops and spikes described above.

The inverter adapts its current feed as soon as a drop or spike incident occurs in order to bolster the grid voltage. The support takes place in the event of voltage drop in the form of overexcited reactive current (corresponds to a capacitive load), in the event of voltage spike in the form of overexcited reactive current (corresponds to an inductive load). In the reactive current priority mode, the effective current is reduced to the extent necessary to comply with the limits of the maximum continuous current of the inverter.

A dip or swell is detected if either the normal operating voltage range setting is exceeded by at least one phase-phase or phase-neutral voltage, or if a voltage jump in the positive or negative sequence component greater than the deadband setting occurs. The magnitude of the voltage jump of the positive and negative sequence corresponds to the difference between the pre-fault voltage and the actual voltage based on the reference voltage. The pre-fault voltage is calculated as a 50-periods mean value.

$$\Delta u = \frac{U - U50per}{Uref}$$

Fig. 97: Formula no. 1

The reactive current is adapted using a response time of <20 ms and a setting time of <60 ms after the incident has occurred. Responses to changes in the voltage during the incident or to the voltage recovery at the end of the incident take place with the same dynamic.

The formula for calculating the dynamic reactive current that is fed for the positive or negative phase sequence voltage is:

$$I_b = \Delta u * k * I_{max}$$

Fig. 98: Formula no. 2, depending on the nominal current Imax of the inverter

For the positive and negative phase sequence voltage, *Δu* equates to the difference between the pre-fault voltage and the current voltage based on the max. reference voltage. The pre-fault voltage is calculated as a 1-min mean value.

EN

$$\Delta u = \frac{U - U1min}{Uref}$$

Fig. 99: Formula no. 3

On account of the definition of a voltage jump in pre-norm EN50549-2 and in VDE-AR-N 4120 and VDE-AR-N 4110, it is typically the case that another voltage jump is detected when the incident is at an end, when the fault is rectified and when the voltage returns to a normal state. The result of this is that in an active operation mode a dynamic grid support using a fast feeding of residual current remains active even after the incident has passed and that reactive current is fed in according to the formulae (2) and (3). Dynamic grid support using fast feeding of residual current is then deactivated after a configured minimum support time, usually 5 s.

If the zero current threshold is exceeded, the inverter stops feeding current into the grid. If the inverter feeds in reactive power before the fault occurs, the reactive power is reset to the value prior to the fault Q after the fault has ended using the settling time set in the activated reactive power control mode.

$$I_b = (\Delta u_1 - tb) * k * I_N$$

Fig. 100: Formula no. 4

10.3.3 Parameters for FRT

Country-spec. Settings	Menu level	Display/ Setting	Action in this menu/meaning
	1 2 3 4	FRT (Fault Ride Through)	**NOTE: The device supports dynamic grid stabilisation (Fault Ride-Through). More detailed information at** [See section 10.3 Page 90]
		Operation mode – On | Off Setting | Manual |Predefined zero current	**Setting: Manual** All parameters can be configured independently. **Setting: Predefined zero current** Dynamic grid support active on account of immunity to interference and zero current feed-in. During a voltage incident, the current in the inverter is reduced to zero. All parameters are pre-configured, only the activation threshold for zero current has to be configured.
		Priority – Reactive current limitation | Active current priority	**Priority: Reactive current priority** Dynamic grid support active on account of immunity to interference and fast feeding of residual current. The inverter feeds additional reactive current according to the formulae (2) and (4). **Priority: Effective current priority** Dynamic grid support active on account of immunity to interference and fast feeding of active current with dynamic reactive current. The inverter feeds in as much active power as available. If, as a result of this, the maximum continuous current is not achieved, the inverter supplies additional reactive current according to the formulae (2) and (4) up to the limit of continuous current.
		Zero current undervoltage threshold Zero current threshold over voltage 0 – 80 [% Unom] / 10 [% Unom] / 0.1 108 – 129 [% Unom] / 125 [% Unom] / 0.1	If one or more phase/phase or phase/neutral conductor voltages move above the configured threshold, the inverter changes to zero current mode. The total current is regulated to virtually zero.

EN

Country-spec. Settings	Menu level	Display/ Setting	Action in this menu/meaning
		Reference voltage ⚙ 80 – 110 [% Unom] / ◦ 100 [% Unom] / ◠ 0.1 [Unom]	Nominal value of the phase/neutral conductor voltage used as a reference voltage for formula (1) and (3). Adjustable in the range from level 1 undervoltage protection to level 1 overvoltage protection.
		Constant k negative sequence dip Constant k negative sequence swell ⚙ k 0 – 10 / ◦ 2 / ◠ 0.1	Amplification factor for the negative sequence used in the calculation of the reactive current using formulae (2) and (4). Can be configured independently for drops and spikes.
		Constant k positive sequence dip & Constant k positive sequence swell ⚙ k 0 – 10 / ◦ 2 / ◠ 0.1	Amplification factor for the negative sequence used in the calculation of the reactive current using formulae (2) and (4). Can be configured independently for drops and spikes.
		Dead band ⚙ 2 – 120 [% Uref] / ◦ 10.0 [% Uref] / ◠ 0.1	Dynamic grid support through fast feeding of residual current activated in the case of voltage events with a voltage change greater than the dead band.
		Reference voltage 80 – 110.0 [% Unom] / ◦ 100 [% Unom] / ◠ 0.1 & Minimum operating voltage activation 45 – 125.0 [% Unom] / ◦ 80 [% Unom] / ◠ 0.1 & Maximum operating voltage activation 45 – 125.0 [% Unom] ◦ 80 [% Unom] / ◠ 0.1	Dynamic grid support via fast feeding of residual current is activated on voltage events with at least one phase/phase or phase/neutral conductor voltage outside the configured normal operating voltage range. Dynamic grid support via fast feeding of residual current is deactivated when the voltage returns to the reference operating voltage range.
		Minimum operating voltage deactivation ⚙ 0 – max [V] ◠ 1 [V] & Maximum operating voltage deactivation ⚙ 0 – max [V] ◠ 1 [V]	Dynamic grid support via fast feeding of residual current is deactivated when the voltage is within the configured deactivation range. This parameter is only available for the country settings VDE 4105, CH 4105 and UD.
		Dynamic reactive current only ☑☰Off | On	**Standard**: The reactive current according to the formulas (2) and (4) is fed in as an **additional** reactive current. The means that sum of the prefault and additional reactive current is fed in. **Only dynamic:** The reactive current according to the formulae (2) and (4) is fed in as absolute reactive current. This means that regardless of the reactive current before the voltage event, only the reactive current according to the formulae (2) and (4) is fed in during the voltage event.

EN

Country-spec. Settings	Menu level	Display/ Setting	Action in this menu/meaning
		Dead band mode Mode 1 | Mode 2	**Mode 1**: When calculating the reactive current, the value of the dead band is not subtracted from the amount of voltage change. As such, formula (2) applies to overvoltage and undervoltage incidents. **Mode 2:** When calculating the reactive current, the value of the dead band is subtracted from the amount of voltage change. For overvoltage and undervoltage events, formula (4) therefore applies: $I_b=(\Delta u_1\text{-}tb)*k*I_N$
		Reactive current limitation ⚙ 0 – 100 [% Imax] / ◦ 100 [% Imax] / 🖴 1	The reactive power component of the fast feeding of residual current is limited to permit a defined proportion of active power components.
		Minimum support time ⚙ 1000 – 15000 [ms] / ◦ 5000 [ms] / 🖴 10	If due to a voltage jump in accordance with formula (1) and the configured dead band is activated, the dynamic grid support is deactivated via fast feeding of residual current after the minimum support time elapses.
IL_L, IL-MV and UD.		Deactivation delay ⚙ ◦ 0 [ms] / 0 – 500 [ms] IL_LV / UD / ◦ 500 [ms] IL-MV / 🖴 1	Deactivates the dynamic power support after the desired delay as soon as the voltage returns to the normal operating range. This parameter is only available for the country settings IL_LV, IL-MV and UD.

10.4 Other grid-supporting functions that are effective in the case of active power

10.4.1 Permanent power gradient limitation

The maximum active and apparent power to be installed for a generation plant is agreed between the grid operator and plant operator. The device capacity of a plant can be set to the exact agreed value using the S_{lim} and P_{lim} settings. To ensure that the load on the devices in the plant is uniform, we recommend distributing the performance reduction evenly across all devices.

Some grid connection rules insist that the agreed reactive power be supplied from every operating point of the plant without a reduction in the actual active power. Because KACO devices have the full P-Q operating range, a reduction in the active power is, however, required during operation at maximum active power because an apparent power reserve is not available. By adjusting P_{lim}, the maximum active power can be restricted in order to establish an apparent power reserve and ensure that the agreed reactive power can be delivered from any active power operating point. The graphic [See figure 101 [▶ Page 94] shows the appropriate P-Q operating range with a required example active power of 48% of the maximum apparent power of the plant or 43% of the maximum active power of the plant.

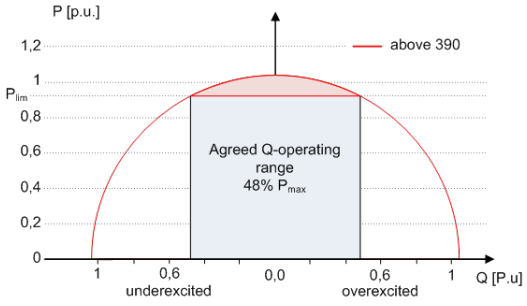

Fig. 101: P-Q operating range with limited active power (Qmax=Smax≠Pmax) for PV inverters

The power reduction parameters can be adjusted in SunSpec model DID123. During this process, you should also check whether internal and/or external power reduction is active.

Internal power limitation	Parameters for external power limitation	Parameters for power limitation
Status = active	Status = active	Parameter im SunSpec Model 123:

EN

Internal power limitation	Parameters for external power limitation	Parameters for power limitation
Maximum apparent power S_{lim}=**100000 VA**		„WMaxLimPct" = 50% P_{lim} (**ca. 40000 W**)
Maximum active power P_{lim}= **80% (ca. 80000 W)**	AC fallback active power Pfb = **75%** P_{lim} **(ca. 60000 W)**	„WMaxLimPct_RvrtTms" = **60s** "WMaxLimPct_RmpTms" = **2s**
	PT1 Settling time = 1s	"WMaxLim_Ena" = **1**

Tab. 9: Sample parameters for power limitation

If the ramp time "WMaxLimPct_RvrtTms" in the SunSpec model is specified as 0 s, then the internal output gradient is used. Otherwise, the set value will be used.

Irrespective of the communication protocol used, the settling time "WMaxLim_Ena" is used in order to transfer the new power value. Otherwise, the internally configured value will be used.

The additional ramp time "WMaxLimPct_RmpTms" specifies the jump time from a power value to the new power value.

The following formulae are used to calculate the gradient $S_{lim/min}$:

$$\text{GradientWattPerMin} = \frac{\left(\frac{WMaxLimPct}{100} \times Plim - Pactual\right)}{WMaxLimPct_{RmpTms}} \times 60 \times \frac{100}{Slim}$$

$$\text{GradientWattPerMin} = \frac{\left(\frac{50\%}{100} \times 80000\ W - 60000\ W\right)}{2\ s} \times 60 \times \frac{100}{100000 VA}$$

$$\textbf{GradientWattPerMin} = -600\ \%\ \boldsymbol{Slim\ /min}$$

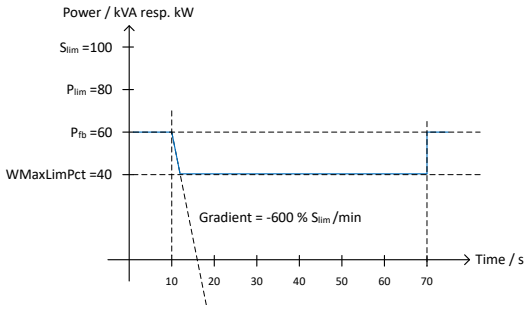

Fig. 102: Power gradient according to sample parameters and calculation

The following formulae are used to calculate the Q filter parameter and cos ϕ gradient:

$$\text{GradientVArPerMin} = \frac{\left(\frac{VArMaxPct}{100} \times Slim - Qactual\right)}{VArPct\_RmpTms} \times 60 \times \frac{100}{Slim}$$

Fig. 103: Formula for calculating the Q filter parameter

$$\text{GradientVArPerMin} = \frac{\left(\frac{VArMaxPct}{100} \times Slim - Qactual\right)}{OutPFSet\_RmpTms} \times 60 \times \frac{100}{Slim}$$

Fig. 104: Formula for calculating the cos ϕ gradient (internal power gradient)

10.4.1.1 Parameters for permanent power limitation

Country-spec. Settings	Menu level	Display/ Setting	Action in this menu/meaning
		Power limitation ☑ Check activation	Activate or disable the power limitation.
		Maximum apparent power (S_{lim}) 1000 – S_{max} [VA]	The apparent power is limited globally to the configured value in VA. As soon as S_{lim} has been configured, all of the active and reactive power control values will use S_{lim} as 100% instead of S_{max}.

EN

Country-spec. Settings	Menu level	Display/ Setting	Action in this menu/meaning
		Maximum active power (P_{lim}) 1 – 100 [% S_{lim}]	Active power is limited globally to the configured value in % S_{lim}.

10.4.2 Soft start up / power ramp-up limiting

A soft start-up function is available to prevent the grid from being negatively impacted by a sudden increase in feed-in power from the inverters.

When the inverter is activated or switched on, the increase in power is restricted by the set gradient. It is possible to configure whether the soft start-up should occur every time the device is switched on, only upon initial start-up each day or only upon start-up after the device has been switched off by grid protection. Due primarily to the fact that there is the risk that many plants could increase their power levels simultaneously after they have been switched off by grid protection, a soft start-up is usually only required for start-up after a device has been switched off by grid protection.

The soft start up is implemented by an absolute power limitation that increases with a continuous gradient up to the maximum power. The actual power of the inverter may vary freely below this limit due to a possible fluctuation in the available power or the target value, but at no time increases above the absolute power limit.

10.4.2.1 Parameters for soft start-up

Country-spec. Settings	Menu level	Display/ Setting	Action in this menu/meaning
	1 2 3 4	Power ramp	**NOTE: Power ramp-up is used to ramp up the power gradually.**
		Gradient ⚙ 1 – 600 [% / min]	Increase in power limitation. The maximum power limitation increases to 100% of the nominal power with the specified gradient.
		Power rampup on every connect	The soft start ramp is activated each time the inverter is connected to the grid.
		Rampup on first connect	The soft start ramp is activated for the first connection of the inverter to the grid on a specific day or after a complete restart of the inverter (AC and DEC disconnected).
		Rampup after grid failure	The soft start ramp is activated when the inverter is connected to the grid after the internal interface protection is triggered or via the external grid protection connection (power protection).

10.4.3 Normal operation power gradient

In the case of very large plants, it may also be necessary to restrict the change in power level during normal operation. If the set value (for increase and decrease in power level) and the solar irradiation change (for increase in power level), then the grid feed-in power is increased or decreased in line with the configured gradient. A limitation is not possible if the solar irradiation is reduced.

The function is not active for power changes defined by another grid support function, such as power recovery after Fault Ride Through, P(f), P(U).

10.4.3.1 Parameters for power gradient in normal operation

Country-spec. Settings	Menu level	Display/ Setting	Action in this menu/meaning
		Operation mode ⚙ On/Off	Activate or deactivate the power gradient limitation in normal operation.

Country-spec. Settings	Menu level	Display/ Setting	Action in this menu/meaning
		Increasing gradient ⚙ 1-65534 [% S_{max} / min]	The change in the active power is limited to a configured power increase gradient.
		Falling gradient ⚙ 1 – 65534 [% S_{max} / min]	The change in the active power is limited to a configured power decrease gradient.

10.5 Advanced islanding detection

Due to decentralized generation, there is the possibility that a deactivated part of the grid will remain live in an unintended island due to the balance of load and generation in this part of the grid. The detection of unintended island formation is an important function of decentralized generating units and is related to the prevention of damage to equipment as well as safety of personnel.

Depending on the structure and the operation of the distribution grid several dangers exist:

- In case of maintenance work in a distribution grid, personnel may be placed in danger if the deactivated part of the grid remains live as an island. This is especially the case if not all safety rules are followed.
- If fast auto-reclosure is used in a distribution grid and the deactivated part of the grid remains live as an island, reclosure will likely happen during phase displacement which might cause damage to rotating machinery on the grid.
- In the event of a fault in a medium voltage grid, the faulty part of the grid is disconnected. If the fault has a significant resistance, the deactivated part of a medium-voltage grid remains live as an island. Depending on the type of fault, but explicitly in case of a fault in the transformer, dangerous medium voltage might be accessible or even present in low-voltage appliances.

Especially for the last example very fast disconnection of the generating units to cause collapse of the forming island is necessary. At the same time any island formation detection method may cause false tripping. The industry is therefore in constant research to develop methods that are fast and reliable and at the same time reliably prevent false tripping.

Enhanced island detection method

The new method by KACO new energy, enhanced island detection, employs a strategy to reliably detect island formation that is based on the characteristic differences between an interconnected grid and an islanded grid, thus ensuring reliable fast detection and prevention of false tripping.

An interconnected grid is dominated by rotating machinery, as a consequence frequency is proportional to active power balance and voltage is proportional to reactive power balance. In contrast an islanded grid behaves like a resonant circuit, as a consequence frequency is proportional to reactive power balance and voltage is proportional to active power balance. The active enhanced island detection method detects this difference by monitoring the behaviour of the grid. The improved islanding detection monitors the natural fluctuation of the grid frequency and feeds in a minimal reactive power that is proportional to the rate of change of the frequency. At the moment that islanding is established, the connected grid closes a positive feedback loop, which allows the inverter to detect the altered situation and disconnect. In case of formation of an island, the inverter disconnects within some 100 ms, well below 1000 ms.

- The number of parallel inverters does not affect the reliability of this function.
- This method also guarantees that the impact on the distribution grid is minimised.
- In normal operation no effects on harmonic content, flicker and grid stability are detected.

This detection method is combined with a two stage passive rate of change of frequency (ROCOF) observation. If the ROCOF of the grid exceeds the configured disconnection threshold (stage 1) for the configured disconnection time, the device switches to zero current mode. If the ROCOF of the grid exceeds the configured disconnection threshold (stage 2) for the configured disconnection time, the device switches off. In case of an island, this will shut down the island instantaneously. If the grid stabilizes, what might be the case if the ROCOF event was due to a short disturbance in the power grid, the inverter will resume normal operation. In the event of active stage 1, the device switches to zero current mode, and re-starts the infeed after a few 100 ms. With stage 2 active, the device has switched off and the set reconnection conditions shall apply.

EN

10.6 Q on Demand

⚠ DANGER

When deactivating `night shutdown` ("Q on Demand" mode), a high DC voltage may still be present both at the string combiner and at the device despite the string combiner being switched off.

1. In case of maintenance, the device must also be disconnected from the power supply on the AC side.
2. We recommend affixing an appropriate danger notice to the string combiner.

The "Q on Demand" function can also provide reactive power Q outside of feed-in mode (e.g. at night) for grid stabilisation. The function is only available from the named firmware version onwards [See section 1.1 Page 4].

Important preconditions:

- "Night shutdown" function disabled in the menu
- Device is connected on the AC side
- Device was in feed-in mode.

First priority is given to the specifications that the inverter receives from the grid operator via the park controller over Ethernet or RS485. Second priority is given to the parameters stored in the inverter for Q-constant and Q(U).

In the event of AC disconnection during "Q on Demand" mode outside of feed-in mode, it is only possible to use the "Q on Demand" function again after normal feed-in mode (with sufficient DC supply). The existing disabled "night shutdown" also remains active.

The following figures show normal operation in the P-Q operating range, during the day (feed-in mode) (1) and "Q on Demand" operation at night (2).

Only reactive power is generated at night. Inevitably, some active power is required for the internal power supply in order to maintain the pre-set reactive power functions in "Q on Demand" mode (see pos. 2 in the negative P range).
Reactive power control mode setting: See table : Configuration via web user interface [Page 61].

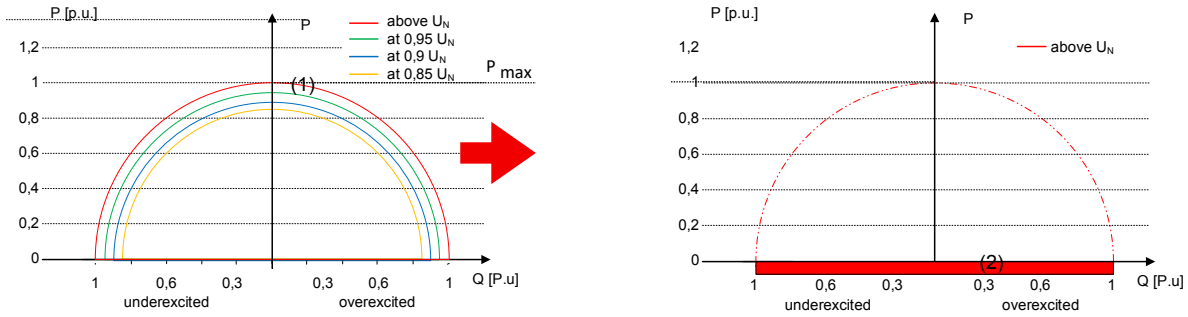

Key

(1) Normal operation: Active power and reactive power provision at different voltages.

(2) Q on Demand function: Reactive power provision at nominal grid voltage outside feed-in mode.

EN

11 Maintenance and troubleshooting

11.1 Visual inspection

Inspect the product and cables for visible external damage and note the operating status display, where applicable. In the event of damage, notify your installation engineer. Repairs may only be carried out by authorised electricians.



⚠ DANGER

Dangerous voltage due to two operating voltages

Severe injuries or death may occur if the cables and/or terminals/busbars in the device are touched. The discharge time of the capacitors is up to 5 minutes.



1. Only appropriately qualified electricians authorised by the mains supply network operator are permitted to open and maintain the device.
2. Before opening the device: Disconnect the AC and DC sides and wait at least 5 minutes.



NOTE

There are components in the housing of the device which may only be repaired by the customer service team.

1. Do not attempt to repair faults that are not described here (in the chapter on troubleshooting and fault rectification). Contact our Customer Service department. Only carry out maintenance activities that are described here.
2. Log each maintenance activity in the "Service" menu item: "Service Log" (exception: "user" interface) [See section 9.4.2 Page 50]
3. The device should be checked for proper operation by a qualified electrician at regular intervals and if you experience problems, you should always contact the system manufacturer's Service department.

11.2 Cleaning

11.2.1 Cleaning the housing

⚠ CAUTION

Risk of damage to the device during cleaning!

1. Do not use compressed air or high-pressure cleaners.
2. Use a vacuum cleaner or a soft brush to remove dust from the fan cover and from the top of the device on a regular basis.
3. Remove dust from the ventilation inlets if necessary.

11.2.2 Cleaning the heat sink



⚠ WARNING

Risk of burns from hot surface.

Heat sinks become very hot when in operation.

1. Never touch the heat sinks after commissioning the device.
2. Allow the heat sinks at least 10 minutes to cool down before cleaning.



NOTE

Refer to our service and guarantee conditions on our homepage.

✓ The cleaning intervals must be adapted to match the ambient conditions of the installation location.

1. In sandy environments, we recommend cleaning the heat sinks and fans every quarter.

EN

↻ Cleaning the heat sink requires the fan to be removed.
↻ Switch off the device and secure it against restart.
↻ Keep a suitable brush ready for cleaning.

1. Remove the hood and fan [See section 11.3 Page 100].
2. Clean the free space between the cover and the heat sink using suitable brushes.
3. Clean the heat sink with a suitable brush.

. **NOTE: Do not use any aggressive cleaning agents and ensure that no other components come into contact with fluids.**

⇨ Cleaning completed - if necessary, remount the fans.

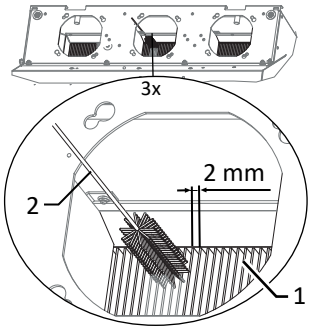

Fig. 105: Cleaning the cooling fins from above

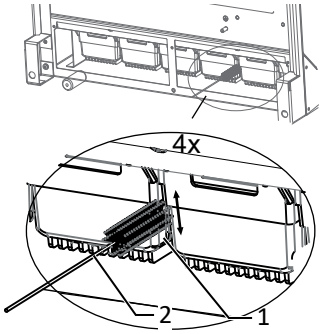

Fig. 106: Cleaning the cooling fins from below

1	Heat sink / space between heat sink
2	Brush (max. wire diameter 2mm)

11.3 Replacing the fan

Removing the cover

↻ It has been ensured that there is no AC/DC voltage present.

1. Remove the fastening screws on the cover from both sides [🛠_T20]
2. Lift up the cover from both sides and press it out of the mounting clips.
3. Set the cover to one side.

⇨ Proceed with the cleaning or removal of the fans.

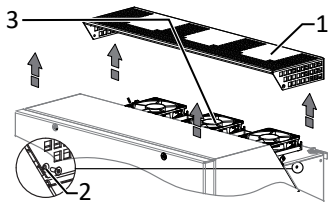

Fig. 107: Remove the cover

1	Cover
2	Screw for fixing
3	Mounting clips
4	Fan

EN

Dismounting the fan

↻ Replace fan time requirement: (10 min each fan) 30 min
↻ It has been ensured that there is no AC/DC voltage present.
↻ **DANGER! Risk of injury from starting fans: If the device is not completely disconnected from the voltage source, the fan may start up unexpectedly and sever or injure limbs. This may also cause damage to the fan and impair the functionality of the device.**
↻ Cover hood for fans removed.

1. Wait until the 3 fans have stopped rotating.
2. Rotate the defective fan through approx. 10° in the clockwise direction and remove it carefully using the collar.
3. Release the interlock and remove the connector plug from the inside of the housing.
4. Remove the fan.
5. If necessary, clean the heat sink from above.

⇨ Install the replacement fan.

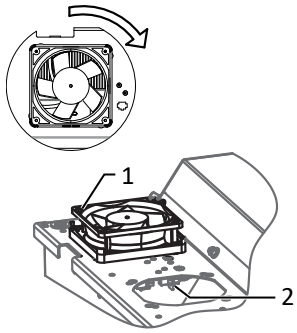

Fig. 108: Dismounting the fan

1 Fan
2 Connector plug

Fitting the fan

↻ You have removed the defective fan.

1. Plug in the connector plug of the new fan at the connection socket provided within the housing and check the interlock.
2. Insert the replacement fan into the collar holder.
3. Screw in the fan anti-clockwise by about 10°.
4. If necessary, insert another fan.

⇨ Fit the cover back in place.

Fitting the interior fan

NOTE: If an internal fan fails, an error message is displayed and the device limits its power to max. 50% of the max. possible power, in contrast to external fans.

↻ You have removed the interior fan.

1. Slide the collar with the fan lengthways off the housing and lift it out.
2. Carefully pull the connected fan off the collar.
3. Press the replacement fan into the collar holder.
4. Plug the connector plug of the interior fan into the connection socket provided and check that it is locked.
5. Insert the collar with the fan into the housing and check that it is firmly seated.
6. Mount the fan grille on the housing.
7. Mount the ventilating plate on the board.

⇨ Interior fan successfully replaced.

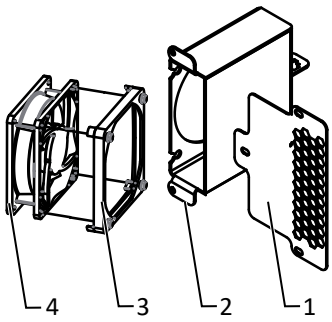

Fig. 109: Disconnecting the interior fan

1 Fan grille
2 Housing
3 Collar
4 Fan

Fitting the cover

↻ The fan has been correctly installed and all impurities in the area of the cover have been removed.

1. Lift up the cover from both sides, place it on the mounting clips and carefully press it in.
2. Insert the fastening screws into the cover on both sides and tighten them [_T20 / 2 Nm].

⇨ You may now start up the device [See section 8 Page 36].

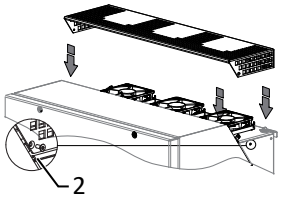

Fig. 110: Fitting the cover

2 Screw for fixing

EN

11.4 Replacing overvoltage protection

AC overvoltage protection

↻ **NOTE: If the message "Overvoltage protection module defective" appears in the web interface, these modules must be replaced.**

↻ **NOTE: Ensure that the device is completely free of AC/DC voltage.**

1. [[See section 7.2 Page 23]].
2. Remove faulty modules individually from the plug-in frame and replace with a module of the same type.

NOTE: Different AC surge protection modules are used. The designation on the PCB must match the module code (GTD/MOV).

1. Insert the AC overvoltage protection modules into the plug-in frame one after another.
2. Ensure that all protective elements are properly secured.

⇨ Proceed with the installation of the device.

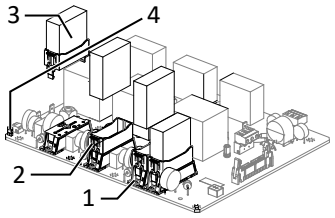

Fig. 111: Inserting AC overvoltage modules

1	AC surge protection socket
2	AC intermediate plug-in frame
3	AC surge protection module (4 slots)
4	SPD monitoring jumper

DC overvoltage protection

↻ **NOTE: If "defective" appears in the status display of the overvoltage protection module, it must be replaced.**

↻ **NOTE: Absence of AC/DC voltage ensured.**

1. [See section 7.2 Page 23].
2. Unlock faulty modules via the locking latch.
3. Remove the defective modules one-by-one out of the DC base and replace with a module of the same type.

. **NOTE: The coding at the base plug-in position must match the coding on the module.**

4. Insert the DC overvoltage protection modules into the DC base one after another.
5. Secure new modules using the locking latch.
6. Ensure that all protective elements are properly secured.

⇨ Proceed with the installation of the device.

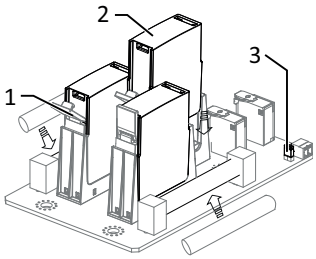

Fig. 112: Inserting overvoltage modules

1	DC base
2	DC overvoltage protection module (3 slots)
3	Jumper

11.5 Shutting down for maintenance / troubleshooting

Shutdown sequence

1. Switch off the grid voltage by turning off the external circuit breakers.
2. Disconnect the DC side using the external DC isolator switch.

. **DANGER! The DC cables are still live**

⇨ After shutdown, wait 5 minutes before opening the device.

11.6 Faults

11.6.1 Procedure



⚠ DANGER

Lethal voltages are still present in the connections and cables of the device even after the device has been switched off and disconnected!

Severe injuries or death may occur if the cables and/or terminals/busbars in the device are touched.

1. If a fault occurs, notify an appropriately authorized and qualified electrician or KACO new energy GmbH Service.
2. The operator can only carry out actions marked with a B.

11.6.2 Rectifying the cause

B = Operator's responsibility ; E = The indicated work may only be carried out by an authorised electrician. ; K = The indicated work may only be carried out by a service employee of KACO new energy GmbH!

EN

Error	Possible cause	Explanation/remedy	By
The LEDs do not light up	Grid voltage not available	› Check whether the DC and AC voltages are within the permitted limits (see Technical Data)	E
		› Notify KACO Service.	E
The device stops feeding into the grid shortly after being switched on, even though there is sunlight present.	Defective circuit-breakers in the device	If the circuit-breakers are defective, the device will recognize this during the self-test.	K
		› Ensure that there is sufficient PV generator power.	E
		› If the grid separation relay is defective, have it replaced by KACO Service.	
		› Notify KACO Service.	
Device is active but not connected to the grid. A grid fault is displayed on the status LED.	Grid-feed is interrupted due to a grid fault.	Due to a grid fault (over/undervoltage, over/underfrequency), the device stopped the feed-in process and disconnected from the grid for safety reasons.	
		› Change the grid parameters within the permitted operating limits (see the "Start-Up" section).	E
The grid fuse trips.	The grid fuse capacity is too low.	In case of a high level of solar radiation, the inverter exceeds its rated current for a short period, depending on the PV generator.	
		Select the capacity of the device's backup fuse to be somewhat higher than the maximum feed-in current (see the "Installation" section).	E
		› Contact the grid operator if the grid failure continues to occur.	E
The grid fuse trips.	Hardware damage on the device.	If the grid fuse trips immediately when the device goes into feed-in mode (after the start-up period is complete), the device's hardware is probably damaged.	
		› Contact KACO Service to test the hardware.	E
The device is displaying an impossible daily peak value.	Faults in the grid.	The device continues to operate as normal without losses to the yield, even when an erroneous daily peak value is displayed. The value is reset overnight.	
		To reset the value immediately, switch the device off by disconnecting it from the grid and switching off the DC, then switch it back on.	E
Daily yields do not correspond to the yields on the feed-in meter.	Tolerances of the measuring elements in the device.	The measuring elements of the device have been selected to ensure maximum yields. Due to these tolerances, the daily yields shown may deviate from the values on the feed-in meter by up to 15%.	E
		› No action.	
Device is active but not connected to the grid.	Generator voltage too low; grid voltage or PV generator voltage unstable.	The PV generator voltage or power is not sufficient for feed-in (solar radiation is too low). The inverter checks the grid parameters before the feed-in process begins. The length of time it takes to switch back on again differs from country to country, depending on applicable standards and regulations, and may be several minutes. The starting voltage may have been set incorrectly.	
		› Adjust starting voltage in the Parameter menu.	E
		› No action	

EN

Error	Possible cause	Explanation/remedy	By
Even with high radiation levels, the device does not feed the maximum power into the grid.	Particular ambient conditions.	The device has reduced its power to prevent damage due to excessive temperatures inside the device. Note the technical data. Ensure that the convection cooling is not impeded from the exterior. Do not cover the cooling fins.	
		› Ensure sufficient cooling of the device.	B
		› Remove any foreign bodies which are present on the unit.	B
		› Clean the cooling fins	E
	DC fuse defective	A generator string is disconnected from the device owing to a faulty fuse. Check why it has tripped by measuring all DC strings using a clip-on ammeter. - If there is no current flow in a string, the associated DC fuse is faulty.	
		› Check the no-load voltage and dimensioning of the PV generator. Replace the damaged modules if necessary.	B, E
		› Replace the PV fuse with a fuse of the same size and type.	

Tab. 10: Troubleshooting

11.7 Messages

Many event messages indicate a fault in the grid. They are not operational faults of the device. The triggering levels are defined in standards, e.g. VDE0126-1-1. The device shuts down if the values exceed or fall below the approved levels.

Fault LED (red)	Status	Explanation	LED
	FS (fault status)	– Fault signal relay has been tripped.	On
		– Feed-in was ended due to a fault.	
	OS (operating status)	– The fault relay releases again.	Off
		– The device feeds back into the grid again after a country-specific time period.	

11.8 Event messages

The following table lists the possible ProLog© status messages that the device can display by means of the LC display / web user interface and the LEDs.

No.	Event message	Explanation	Remedy	Pers.
_		Device is waiting until the start voltage is reached.	PV modules must have sufficient exposure to daylight => Remove covers if necessary.	-
1	Waiting for feed-in	Message is displayed when the device starts up. The generator voltage is lower than the starting voltage (pre)set in the device or the grid is still being checked for stability.	Start voltage set too high. => Check the DC configuration of the PV system and reduce the “Start voltage” in the menu if necessary.	-
2	Insufficient generator voltage insufficient battery voltage	Insufficient generator voltage and power, status before the transition to night shutdown.	> Does the web user interface correctly display the voltage measured at the DC terminals? => If necessary, check the phase voltage individually. > XL version: Is the DC isolator switch switched off? => Switch off DC isolator switch > Is there DC polarity reversal? => Check polarity according to chapter 7.5. > Is the firmware fully installed? => Install firmware again according to “Software Update Guide xxx”.	-

EN

No.	Event message	Explanation	Remedy	Pers.
4	Yield counter for daily and annual yields are displayed	Message indicates regular feed-in mode. In cases of sufficient sunlight, the unit feeds into the grid with MPP control so as to maximise yields.	Is the expected power not being fed in? => Check the open circuit voltage with a multimeter and check whether the PV system is working: - DC polarity reversal is present - frequent power limitation due to inadequate dimensioning - if constant voltage mode is active: check whether open circuit voltage is lower than the set constant voltage.	E
8	Self test in progress	“The following sequence is run through during the self-test before feeding in: 1. S8 grid relay self-test 2. S79 ISO measurement 3. S8 filter relay self-test 4. S75 (load DC link) 5. S8 pre-synchronisation 6. S4 feed-in	The results of the self-test can indicate the cause of the PV system or device. Note the last status issued.	-
10	Temperature in device too high	Due to a lack of air circulation, the device was switched off because of overtemperature.	Have the minimum distances for overleaf installation been observed? => Check information in chapter 6. Has the device been covered inadvertently? =>Remove the object or cool down the environment. Is the fan or, if it can be reached, the heat sink dirty? => Clean fan & heat sink according to chapter 11.2.	B B E
11		Power limitation: If the generator power is too high, the device limits itself to the maximum power (e.g. around noon if the generator capacity is too large).	See status 8 in remedy	-
17	“Powador-protect disconnection” or “External grid protection shutdown”	Due to a grid failure (e.g. under/overvoltage or under/overfrequency), a shutdown was initiated by the higher-level grid plant protection. The set limit value has been exceeded.	Has the grid plant protection been supplied with power correctly? => Check the “grid parameters” on the grid plant protection. (external device) > Is the cabling implemented correctly? => If external grid plant protection is not required, it must be deactivated in the menu of the device. See chapter 9.4 Menu structure.	E
18	Resid. current shutdown	The integrated AC/DC-sensitive residual current device registered an non-permissibly high leakage current going to PE. Tripped with a jump of 30 mA, 60 mA & 150 mA each with the corresponding shutdown times. The reconnection time is country-specific.	> Has the PE line been laid correctly or does this error also occur frequently in the rain? => Measure the insulation resistance of the system and, if necessary, earth the PE line correctly.	E
20	Active ramp limitation	Internal power limitation, e.g.: “Ramp Up” 10 %/min The result when the power is increased with a ramp is country-specific (after P(f), restart, after grid error, after every connect)	This is required by the country-specific standard.	-
31	RCD module error	An error has occurred in the AC/DC-sensitive residual current device.	N/A	-

EN

No.	Event message	Explanation	Remedy	Pers.
33	DC feed-in error	The DC component in the feed-in current is outside the allowable limit values.	If displayed once, the system will attempt to recalibrate itself. In case of frequent or permanent display, you should contact the service department. Note: Due to country-specific requirements (e.g. Italy), the limit values for shutting down are very low).	E
34	Internal communication error	A communication error has occurred in the internal data transmission.	If an installer is on site, the communication cable between the display board and the AC power unit should be checked for firm seating, or a commercially available CAT5 cable should be used for testing. Note: A high temperature-resistant cable is prescribed in the device. Please contact the service department.	E
35	Protect. shutdown SW	Due to a measured value which is outside the permissible range, a shutdown has been carried out to protect the device Possible causes for shutdown: - Grid overvoltage (each phase is monitored) - DC link overvoltage - DC link asymmetrical - Grid current (every phase is monitored) - Internal reference voltage	Does the error or fault occur only sporadically? How is the device connected to the grid (strongly inductive network (directly on the transformer))? -> If the system has its own transformer, the short-circuit voltage of the transformer provides information on the inductance of the grid for the system (4% short-circuit voltage is a very good value). SW from V3.14 also supports 8% and more. => Update SW. If the error is present continuously, it can be assumed that there is a device fault -> Contact the service department This error can be caused by poor connection/cabling on the AC side. Check all connection terminals from the device to the grid connection. A fluctuating or missing AC voltage can indicate this connection problem.	K
36	Protection shutdown HW	Group message for all trip zone shutdowns.	Grid-related disconnection of the grid operator. The grid connects again automatically. Please wait.	-
37	Unknown hardware	No valid version of the power unit was detected.	Device restart attempted? (Disconnect AC/DC – switch it back on after 5 minutes.) => If not successful, contact the service department.	-
38	Error: Generator Voltage too high Error: Battery overvoltage	The voltage of the PV generators has exceeded the maximum permissible value (for limit values, see data sheet).	Are PV strings connected in series instead of in parallel? => Check PV voltage with a suitable measuring device and, if necessary, check planning and assignment.	E
41	Grid failure undervoltage L1	The limit value is country-dependent. This is a legally required check of the power supply.	Your installer should check the AC voltage at the terminals and AC wiring. If the settings in the menu are also correct, contact the service department.	E
42	Grid failure: overvoltage L1	See explanation in status 41	See remedy in status 41	E
43	Grid failure undervoltage L2	See explanation in status 41	See remedy in status 41	E

EN

No.	Event message	Explanation	Remedy	Pers.
44	Grid failure: over-voltage L2	See explanation in status 41	See remedy in status 41	E
45	Grid failure under-voltage L3	See explanation in status 41	See remedy in status 41	E
46	Grid failure: over-voltage L3	See explanation in status 41	See remedy in status 41	E
47	Grid failure phase-to-phase voltage	The phase angles between the individual phases of the three-phase supply network is not correct, possibly no three phase connection.	Measure the voltages on the device terminal and compare to the relevant country-specific limit. Check set values in the parameters menu. Check the AC fuses: A phase may be missing. This error can be caused by a poor connection/cabling on the AC side. Check all connection terminals from the inverter to the grid connection. A fluctuating or missing AC voltage can indicate this connection problem.	B/K
48	Grid failure underfrequency	Measured value for grid frequency is outside the permissible limit. Limit is country-dependent.	Has the correct country setting been made? => Check set values in the parameters menu. Your installer should check the AC connection and the connection to the device. Otherwise, contact the service department.	E
49	Grid failure overfrequency	See explanation in status 48	See remedy in status 48	E
50	Grid failure: average voltage	The grid voltage measurement according to EN 50160 (10 min average value) has exceeded the maximum permitted limit value.	If it appears frequently, check the settings in the menu. > Has the firmware not been installed correctly? => Unpack the firmware according to the instructions in the download area.	E
56	SPI remote shutdown	Remote switch off via digital input. (e.g. CEI 0-21)	This was caused by the grid operator.	-
57	Waiting for reactivation	The waiting period following a fault is country-dependent and can last several minutes.	Does the message appear frequently? => Find the reason for switching off via error logs, Prolog status	-
58	Control board overtemp.	The temperature inside the device was too high. The device shuts down to avoid hardware damage.	This message appears only at high ambient temperatures (<60°C) > Has the power been checked? => Observe derating temperature according to data sheet > Is the fan or heat sink covered? => Clean device according to chapter 11.2.	E
59	Self test error	A fault occurred during a self-test.	If the event also appears after a restart, contact the service department.	E
60	Generator voltage too high Battery voltage too high	This can occur briefly with designs with high open circuit voltage and very low external temperatures, and is a protective function of the device.	Are PV strings connected in series instead of in parallel? => Check PV voltage with a suitable measuring device and, if necessary, check planning and assignment.	-
61	External limitation x%	The grid operator requires an active power reduction. If only reactive power is specified, this message does not appear.	This is a requirement from of the grid operator.	-
62	Standalone mode	N/A	N/A	-

EN

No.	Event message	Explanation	Remedy	Pers.
63	Frequency-dependent power change	) This requirement is country-dependent. The response is configurable. Normative requirements. No indication on display (behaves in the same way as normal feed-in mode status 4, therefore no flashing “Feed-in” LED). Can be viewed in service log files and via proLOG/portal. When certain country settings are activated, the frequency-dependent power change is activated.	This is a normative requirement.	-
64	Output current limiting	Power limitation as the max. permissible value of the feed-in current per phase has been reached.	This is a normal protective function of the device due to an excessively low grid voltage.	-
70	Fan 1 error	Failure in the internal fan or the corresponding tacho signal. The power is reduced to 50% Pnom. All 3 LEDs light up on the device.	Is the fan blocked? => Carry out fan maintenance according to chapter 11. For electrically trained and qualified personnel: Are the plugs correctly plugged in? Carry out test.	E
71	Fan 2 fault	Failure in the 1st external fan or the corresponding tacho signal. The power is not reduced. This occurs via the temperature deregulation. All 3 LEDs light up on the device.	See remedy in status 70	E
72	Fan 3 fault	Failure in the 2nd external fan or the corresponding tacho signal. The power is not reduced. This occurs via the temperature deregulation. All 3 LEDs light up on the device.	See remedy in status 70	E
73	Grid failure: Islanding	Standalone mode was detected.	Device was switched off after event in PV system. Contact the service department.	B
75	Self test in progress	Self-test sequence is documented in S8.	See remedy in status 8	-
78	Resid. current shutdown (AFI)	A static residual current causes the device to shut down. The shutdown threshold is determined by the power class and the relevant regulations. For devices in USA/Canada (with UL certification), the device can be reconnected a maximum of 4 times within 24h. F78 therefore stops once the 5th Fault is triggered within 24h.	If the fault occurs in the event of precipitation or high air humidity, this indicates an increased discharge current => check location in the system. Otherwise contact the service department.	E
79	Insulation measurement	Insulation resistance of the system is calculated before connection. Further information in status 19.	Normal device behaviour If the status persists, the service department should be contacted.	B
80	Insulation meas. not possible	Not possible to calculate the insulation resistance.	The installer should check the installation of the PV module. => If the message persists, contact the service department.	E
81	Protection shutdown grid volt. L1	Protection shutdown due to excessively high grid voltage. It is the live value which is decisive for the shutdown procedure. This means that an individual peak value is enough to trigger a shutdown.	Does the message appear frequently? => The installer must check the installation and contact the service department if necessary.	E
82	Protection shutdown grid volt. L2	See explanation in status 81	See remedy in status 81	E

EN

No.	Event message	Explanation	Remedy	Pers.
83	Protection shutdown grid volt. L3	See explanation in status 81	See remedy in status 81	E
84	Protection shutdown undervolt. DC link	Display if the min/max. value of the DC link voltage is undershot. If the device stops feeding in, then there is a fault in the device, otherwise, a highly inductive grid is responsible for this.	Is the location on the AC side to the device correct? => Check all connection terminals from the device to the grid connection. A fluctuating or missing AC voltage can indicate this connection problem. Note: Check the AC-side wiring (transformer inductance capacity) N-conductor is theoretically permitted to have reduced specifications.	E
85	Protective shutdown overvolt. DC link	See explanation in status 84	See remedy in status 84	E
86	Protect. shutdown DC link asymmetry	Protective shutdown due to excessive asymmetry of the two DC link halves	Is the message present after a new feed-in start? => Contact the service department.	E
87	Protect. shutdown overcurrent L1	Protective shutdown due to an excessively high grid current.	Is the AC wiring correct? => The current measurement is possibly not correct. Contact the service department.	E
88	Protect. shutdown overcurrent L2	See explanation in status 87	See remedy in status 87	E
89	Protect. shutdown overcurrent L3	See explanation in status 87	See remedy in status 87	E
91	Protect. shutdown voltage drop 2.5 V	Reference voltage outside the permissible range.	In case of repeated occurrence, contact the service department.	-
97	Protection shutdown overcurrent HW	The protective shutdown has tripped due to an overcurrent into the grid. Triggering takes place via a TripZone.	Device restart attempted? (Disconnect AC/DC – switch it back on after 5 minutes.) => If not successful, contact the service department.	E/K
100	Protect. shutdown HW overheating	See explanation in status 97	See remedy in status 97	B E
101	Temperature plausibility error	The individual temperatures in the device are compared with one another. If a certain limit value is exceeded, the message appears.	In case of repeated occurrence, contact the service department.	K
102	Plausibility fault efficiency	The degree of efficiency of the device must remain within certain limits.	In case of repeated occurrence, contact the service department.	K
104	Plausibility fault AFI module	The device has shut down because of implausible internal measured values.	In case of repeated occurrence, contact the service department.	K
105	Plausibility fault relay	See explanation in status 104	See remedy in status 104	K
106	Plausibility error DCDC converter	See explanation in status 104	See remedy in status 104	K
107	Check overvoltage protection device	Overvoltage protection device (if present in the device) has tripped and must be replaced. AC, DC & interfaces are monitored for triggered overvoltage protection. All 3 LEDs light up on the device.	Check overvoltage protection in the device. The overvoltage protection module has a corresponding function display. With a red function display, the overvoltage protection module must be checked, and replaced if necessary. The device feeds back into the grid.	K

EN

No.	Event message	Explanation	Remedy	Pers.
108	Grid failure: over-voltage L1	Device has detected a fault on one phase and has been switched off.	Are the setting values in the menu correct according to the grid voltage? => Once the test is finished, check all connection terminals from the device to the grid connection. A fluctuating or missing AC voltage can indicate this connection problem.	E
109	Grid failure: over-voltage L2	See explanation in status 108	See remedy in status 108	-
110	Grid failure: over-voltage L3	See explanation in status 108	See remedy in status 108	-
111	Grid failure under-voltage L1	See explanation in status 108	See remedy in status 108	-
112	Grid failure under-voltage L2	See explanation in status 108	See remedy in status 108	-
113	Grid failure under-voltage L3	See explanation in status 108	See remedy in status 108	-
125	Relay control error	The enable signal for the relay control is read back.	In case of repeated occurrence, contact the service department.	K
126	AFI measurement technology error	N/A	N/A	-
127	AC voltage measurement technology error	N/A	N/A	-
128	Internal memory error 1	Fault in read or write access to the internal RAM.	Device restart attempted? (Disconnect AC/DC – switch it back on after 5 minutes.) => If not successful, contact the service department.	B
129	Power reduction P(U)	Message present, if the function P(U) sets the power level according to the specified parameters subject to the AC voltage.	This functionality may, for example, be requested by the grid operator. If there is no request, the function can be deactivated.	B
148	External memory error 1	The device has permanent internal memory for the purpose of, for example, storing the hardware used. Operation parameters are deduced from this.	Device restart attempted? (Disconnect AC/DC – switch it back on after 5 minutes.) => If not successful, contact the service department.	B
150	Protect. shutdown volt. drop 1.65 V	Internal protective function in order to adhere to the required measurement accuracy.	Device restart attempted? (Disconnect AC/DC – switch it back on after 5 minutes.) => If not successful, contact the service department.	B
158	Power limitation	Power limitation because the internal temperature is too high. The temperature is measured on the control card. This is a protective function of the device.	Check whether the cooling of the device is guaranteed: Heat sink clean and installation instructions according to manual adhered to (clearances)?	-
159	Waiting for fault acknowledgement	The DSP is waiting for the configuration data from the HMI.	Configuration of the device via web user interface must be concluded in full.	B
160	Error: Grid relay L1	The self-test has detected a fault with the grid-side relay.	In case of repeated occurrence, contact the service department.	-
161	Error: Grid relay L2	See explanation in status 160	See remedy in status 160	-
162	Error: Grid relay L3	See explanation in status 160	See remedy in status 160	-
163	Error: Grid relay N	N/A	N/A	-

EN

No.	Event message	Explanation	Remedy	Pers.
164	Error: Filter relay L1	The self-test has detected a fault with the grid-side relay.	In case of repeated occurrence, contact the service department.	-
165	Error: Filter relay L2	See explanation in status 164	See remedy in status 164	-
166	Error: Filter relay L3	See explanation in status 164	See remedy in status 164	-
167	Error: Filter relay N	See explanation in status 164	See remedy in status 164	-
169	Error: AFI sensor	The AFI sensor is demagnetised prior to feed-in. If this is not possible, this message appears	In case of repeated occurrence, contact the service department.	-
170	Check overvoltage protection on DC side	N/A	N/A	-
171	Check overvoltage protection on AC side	N/A	N/A	-
172	Internal fan error	Failure of an internal fan or the corresponding tacho signal. The power is reduced to 50% Pnom. All 3 LEDs light up on the device.	Is the fan blocked? => If necessary, clean according to Maintenance chapter. For electrically trained and qualified personnel: Are the plugs correctly plugged in?	-
173	External fan error	Failure of an external fan or the corresponding tacho signal. The power is reduced to 50% Pnom. All 3 LEDs light up on the device.	See remedy in status 172	-
180	Pre-synchronisation not possible	Adequate voltage pre-synchronisation with the AC grid not possible.	Device restart attempted? (Disconnect AC/DC – switch it back on after 5 minutes.) => If not successful, contact the service department.	B
181	Insulation error, centre	The insulation error is located close to the centre of a PV string. The area covers +-15% of the half of the modules based on the total number of modules.	Has the isolation been carried out correctly? => Check the insulation resistance in the system. Note: Insulation fault messages after the update to V4.xy indicate insulation faults in the PV system that previously remained undetected. These must be rectified in order to operate the PV system safely and reliably.	E
182	Insulation error, minus	The insulation fault is located between the centre of a string and the minus terminal on the inverter. If the insulation fault is located very close to the minus inverter terminal, then the fault occurs even if the insulation fault <150 kOhm and is above the set value.	See remedy in status 181	-
183	Insulation error, plus	The insulation error is located between the centre of a string and the plus terminal on the inverter. If the insulation error is located very close to the plus inverter terminal, then the error occurs even if the insulation error is greater than 150 kOhm and is above the set value.	See remedy in status 181	-
184	Protective shutdown overcurrent L1 int.	Protective shutdown due to an excessively high grid current in the interleaved path (channel B) at phase Lx. It is the live value which is decisive for the shutdown procedure.	Device restart attempted? (Disconnect AC/DC – switch it back on after 5 minutes.) => If not successful, contact the service department.	-
185	Protective shutdown overcurrent L2 int.	See explanation in status 184	See remedy in status 184	-

EN

No.	Event message	Explanation	Remedy	Pers.
186	Protective shutdown overcurrent L3 int.	See explanation in status 184	See remedy in status 184	-
187	Fan 4 error	Failure in the 3rd external fan or the corresponding tacho signal. The power is not reduced. This occurs via the temperature deregulation. All 3 LEDs light up on the device.	Is the fan blocked? For electrically trained and qualified personnel: Are the plugs correctly plugged in?	E
188	Semiconductor test not possible	The measurement or actuation of the semiconductors has failed. If necessary, the integrated AC filter can no longer be discharged below 50 V.	Make sure that there is no earthing problem. Disconnect the device on the AC and DC sides. Observe waiting time according to warning sign. Switch the device on again. If this message is displayed again, contact the service department.	B
189	Semiconductor module 1 in channel A defective	Semiconductor module x from channel A is defective or the corresponding filter relay is not closing correctly.	Device restart attempted? (Disconnect AC/DC – switch it back on after 5 minutes.) => If not successful, contact the service department.	B
190	Semiconductor module 2 in channel A defective	See explanation in status 189	See remedy in status 189	-
191	Semiconductor module 3 in channel A defective	See explanation in status 189	See remedy in status 189	-
192	Semiconductor module 1 in channel B defective	Semiconductor module x from channel B is defective or the corresponding filter relay is not closing correctly.	Device restart attempted? (Disconnect AC/DC – switch it back on after 5 minutes.) => If not successful, contact the service department.	-
193	Semiconductor module 2 in channel B defective	See explanation in status 191	See remedy in status 191	-
194	Semiconductor module 3 in channel B defective	See explanation in status 191	See remedy in status 191	-
195	DESAT error	Saturation monitoring (DESAT) of the IGBTs has tripped or the voltage supply (24 V) of the gate drivers is too low.	In case of repeated occurrence, contact the service department.	-
203	Protection shutdown grid volt. L1	Protective shutdown due to excessive grid voltage. It is the effective value which is decisive for the shutdown procedure.	Is the error displayed frequently? => Check the installation again. Otherwise contact the service department. Note: Fault can be caused by a poor location on the AC side. Check all connection terminals from the inverter to the grid connection. A fluctuating or missing AC voltage can indicate this connection problem.	E
204	Protection shutdown grid volt. L2	See explanation in status 203	See remedy in status 203	-
205	Protection shutdown grid volt. L3	See explanation in status 203	See remedy in status 203	-

EN

No.	Event message	Explanation	Remedy	Pers.
206	Protection shutdown overcurrent HW	AC overcurrent shutdown triggered by hardware comparator.	In case of repeated occurrence, contact the service department.	-
207	Detection of hardware detection failed: Control card	The data saved on the control card is erroneous.	Device restart attempted? (Disconnect AC/DC – switch it back on after 5 minutes.) => If not successful, contact the service department.	B
208	Detection of hardware detection failed: AC power board	The data saved on the AC power board is erroneous.	See remedy in status 207	B
209	Detection of hardware detection failed: AC relay board	The data saved on the AC relay board is erroneous.	See remedy in status 207	B
216	Protect. shutdown HW - overvoltage DC link halves	One of the two DC link halves has exceeded the maximum value. Shutdown occurs by way of HW-detection and TripZone shutdown.	Device restart attempted? (Disconnect AC/DC – switch it back on after 5 minutes.) => If not successful, contact the service department.	B
217	Protect. shutdown HW - 24 V supply voltage	The supply voltage in the device has exceeded its max. permitted value. Shutdown occurs by way of HW-detection and TripZone shutdown.	Device restart attempted? (Disconnect AC/DC – switch it back on after 5 minutes.) => If not successful, contact the service department.	B
224	External limitation	This is a relative specification of the desired active power adjustment.	N/A	-
225	Battery voltage too low	N/A	N/A	-
226	The inverter is disconnected from the grid manually	The device can be disconnected from the grid manually after logging in via the web user interface. This message then appears.	Activate the network connection via the symbol on the web user interface.	B
227	Protective shutdown current asymmetry	Protective shutdown that enables safe shutdown of the device in the event of (high-ohm) grid failures. During grid events, asymmetrical currents may occur in the inverter. These are detected and switched off accordingly.	In case of repeated occurrence, contact the service department.	-
228	Protective shutdown voltage asymmetry	Protective shutdown that enables safe shutdown of the device in the event of (high-ohm) grid failures. During grid events, asymmetrical voltages may occur in the inverter. These are detected and switched off accordingly.	See remedy in status 227	-
230	AC voltage limitation	This is a protective function of the device that allows it to be switched off quickly in case of incidents or switching operations at the medium voltage level.	Normative requirement of the grid operator	-
231	External active power target value	External specification of a target value for the fed-in active power. The fed-in active power can be increased and reduced by the grid support procedures. Thus, the network support processes have a higher priority.	Normative requirement of the grid operator	-

EN

NOTE

Event number not found?

If event numbers are displayed on the device but are not listed here, then it is usually necessary to have this looked at by your installation partner.

NOTE

Quick remedy through provision of the service package

If events occur irregularly, our service technician needs to have the service package stored on the device. You must download and send this under the menu item "Service" – "Export Service Package". See table : Configuration via web user interface [▶ Page 71]

EN

12 Decommissioning and dismantling

12.1 Switching off the device



⚠ DANGER

Lethal voltages are still present in the connections and cables of the device even after the device has been switched off and disconnected!

Severe injuries or death may occur if the cables and/or terminals/busbars in the device are touched.

1. Comply with all safety regulations and current technical connection specifications of the responsible power supply company.
2. The device is only permitted to be opened or serviced by a qualified electrician.
3. Switch off the grid voltage by turning off the external circuit breakers.
4. Do not touch the cables and/or terminals/busbars when switching the device on and off.
5. Keep the device closed when in operation.



⚠ WARNING

Risk of burns caused by hot housing components

Housing components can become hot during operation.

1. › During operation, only touch the housing cover on the device.

12.2 Disconnecting connections

12.2.1 AC connection

↻ It has been ensured that there is no AC/DC voltage present.
↻ Remove the housing cover and put it aside.

1. Detach cables (L1/L2/L3) from the AC connection terminal [🔧W_17].
2. Detach the PE line from the earthing bolt [🔧W_17].
3. Unfasten the cable fitting and remove the cables through the cable fitting [🔧W_46].

. **NOTE: If the AC cable does not fit through the cable fitting due to the size of the cable lug, then the AC cable must be severed at the cable lug.**

4. Place protective caps on the ends of the AC cables.

12.2.2 DC connection

↻ Ensure that the device is completely free of DC voltage.
↻ Remove the housing cover and put it aside.

1. Disconnect cable ends from PV generator at DC+ and DC- busbar [🔧W_17].
2. Place fixing elements back into the installation bag.
3. Unfasten the cable fitting and pull the DC line through the cable fitting [🔧W_46]

. **NOTE: If the DC cable does not fit through the cable bolts due to the cable lug size, the DC cable on the cable lug should be disconnected.**

4. Place protective caps on the ends of the DC cables.

12.3 Uninstalling the device



⚠ DANGER

Dangerous voltage due to two operating voltages

Severe injuries or death may occur if the cables and/or terminals/busbars in the device are touched. The discharge time of the capacitors is up to 5 minutes.



1. Only appropriately qualified electricians authorised by the mains supply network operator are permitted to open and maintain the device.
2. Before opening the device: Disconnect the AC and DC sides and wait at least 5 minutes.

↻ The device is switched off and a check has been performed to ensure that it is de-energised.

EN

↻ AC cable disconnected [See section 12.2.1 Page 115].
↻ DC connection disconnected [See section 12.2.2 Page 115].

1. Undo the cable fitting for Ethernet cables [W_29].
2. Undo the cable fitting for RS485 cables [W_20].
3. Disconnect the plug from the communication circuit board.
4. Remove the interface cables from the device.
5. Insert the sealing plug in all open cable fittings.

⇨ The device has been uninstalled. Proceed with removal.

12.4 Removing the device

↻ Unit has been switched off and uninstalled.

1. Remove the screw that prevents the device from being lifted off the mount.
2. Use the lateral openings and lift the device off the mount.

⇨ Device removed. Proceed with the packaging process.

12.5 Packaging the device

↻ Device has been uninstalled.

1. If possible, always pack the device in the original packaging. If this is no longer available, an alternative is to use equivalent packaging.
2. You must be able to close the box completely and it must be able to accommodate the weight and size of the device.

12.6 Storing the device

NOTE

Risk of damage to property as a result of condensation

Faulty storage can form condensate in the device and impair the functionality of the device (e.g. storage outside the ambient conditions or temporary relocation from a cold to a hot environment).

1. Prior to installation, check the inner area for condensation and if necessary, allow it to dry sufficiently before installation.
2. Store in accordance with the technical data > [See section 4.3 Page 15]

↻ Device packaged.

☞ Store the device at a dry location, in accordance with the ambient temperature range [See section 4.3 Page 15].

13 Disposal



⚠ CAUTION

Risk to the environment if disposal is not carried out in the correct manner

For the most part, both the device and the corresponding transport packaging are made from recyclable raw materials.

Device: Do not dispose of faulty devices or accessories together with household waste. Ensure that the old devices and any accessories are disposed of in a proper manner.

Packaging: Ensure that the transport packaging is disposed of properly.

EN

14 Service and warranty

To solve a technical problem with KACO products, please contact the hotline of our service departments.

Please have the following information ready so that we can help you quickly and efficiently:

- Device name / serial number
- Date of installation / Start-up report
- Fault message indicated by status LEDs / Description of the fault / Did you notice anything unusual? / What has already been done to analyze the fault?
- Module type and string circuit
- Consignment identification / Delivery address / Contact person (with telephone number)
- Information about the accessibility of the installation site

NOTE

Specific length of warranty

The maximum length of the warranty is based on the currently applicable national warranty conditions.

EN

15 Appendix

15.1 EU Declaration of conformity (EN)

Manufacturer's name and address	KACO new energy GmbH Werner-von-Siemens-Allee 1 74172 Neckarsulm, Deutschland	
Product description	Photovoltaic feed-in inverter	
Modules *[KACO art. no.]*	KACO blueplanet 87.0 TL3 M1 WM OD IIF0 / KACO blueplanet 87.0 TL3 M1 WM OD IIFX	[1001784 / 1001897]
	KACO blueplanet 92.0 TL3 M1 WM OD IIG0 / KACO blueplanet 92.0 TL3 M1 WM OD IIGX	[1001785 / 1001898]
	KACO blueplanet 105TL3 M1 WM OD IIG0 / KACO blueplanet 105TL3 M1 WM OD IIGX	[1001941 / 1001951]
	KACO blueplanet 110 TL3 M1 WM OD IIK0 / KACO blueplanet 110 TL3 M1 WM OD IIKX	[1001786 / 1001892]
	KACO blueplanet 125 TL3 M1 WM OD IIP0 / KACO blueplanet 125 TL3 M1 WM OD IIPX	[1001623 / 1001894]
	KACO blueplanet 125TL3 M1 WM OD IIK0 / KACO blueplanet 125TL3 M1 WM OD IIKX	[1001942 / 1001952]
	KACO blueplanet 137 TL3 M1 WM OD IIP0 / KACO blueplanet 137 TL3 M1 WM OD IIPX	[1001787 / 1001895]
	KACO blueplanet 150 TL3 M1 WM OD IIQ0 / KACO blueplanet 150 TL3 M1 WM OD IIQX	[1001783 / 1001896]
	KACO blueplanet 155TL3 M1 WM OD IIP0 / KACO blueplanet 155TL3 M1 WM OD IIPX	[1001943 / 1001953]
	KACO blueplanet 165TL3 M1 WM OD IIQ0 / KACO blueplanet 165TL3 M1 WM OD IIQX	[1001944 / 1001954]

15.2 Standards & directives

This is to confirm that the devices listed above comply with the protection requirements set forth in the Directive of the Council of the European Union of 26th February 2014 on the harmonisation of the laws of the member states relating to Electromagnetic Compatibility (2014/30/EU) and the Low Voltage Directive (2014/35/EU).

The devices conform to the following standards:

2014/35/EU	Safety of the device
"Directive relating to electrical equipment designed for use within certain voltage limits"	EN 62109-1:2010 EN 62109-2:2011
2014/30/EU	Interference immunity

EN

"Directive relating to electromagnetic compatibility"	EN 61000-6-1:2007 EN 61000-6-2:2005+AC:2005 EN 62920:2017 Class A EN 62920:2017+A11:2020 Emitted interference EN 61000-6-4:2007 + A1:2011 EN 55011:2016+A1:2017 group 1, class A EN 55011:2016/A11:2020 EN 62920:2017 Class A EN 62920:2017+A11:2020 Secondary effects on the grid EN 61000-3-11:2000 EN 61000-3-12:2011
2011/65/EU	RoHS
"Directive on the restriction of the use of certain hazardous substances in electrical and electronic equipment"	EN IEC 63000:2018 (Technical documentation for the assessment of electrical and electronic equipment with regard to the restriction of hazardous substances)

The types mentioned above are therefore labelled with the CE mark.

Unauthorised modifications to the supplied devices and/or any use of the devices that is contrary to their intended use render this Declaration of Conformity null and void.

This Declaration of Conformity is issued under the sole responsibility of KACO new energy GmbH.



3014392-11-250830

The text and figures reflect the current technical state at the time of printing. Subject to technical changes. No liability for printing errors.

KACO new energy.



Werner-von-Siemens-Allee 1 · 74172 Neckarsulm · Germany · Tel. +49 7132 896-0 · info@kaco-newenergy.de · www.kaco-newenergy.de