sunways

STH Series



- MAX. EFFICIENCY 97.3 %
- IP66 PROTECTION

STH 40~80 kW

Three Phase | 5 MPPTs | Hybrid inverter (HV)

Two separate battery ports.

Maximum 44 A input current per MPPT, support high power solar panel.

AFCI optional

Fast and easy data checking and commissioning via App or OLED display.

200 - 920V wide battery connection range to store more energy and optimize self-sufficiency rate.

Diversified work modes that are compatible with the majority of application scenarios.

Uninterruptible power supply

Powerful load adaptability, support loads stable access.

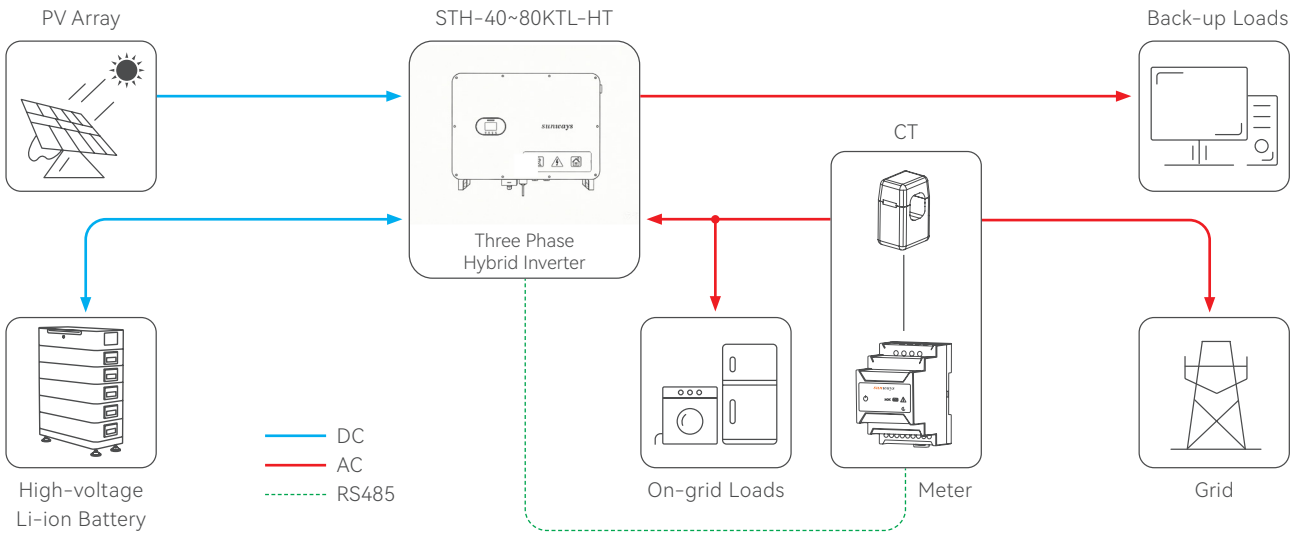

Model		STH-40KTL-HT	STH-50KTL-HT	STH-60KTL-HT	STH-70KTL-HT	STH-80KTL-HT
PV Input	Max. Input Power (W)	80000	100000	120000	140000	140000
	Start-up Voltage (V)	180				
	Max. DC Input Voltage (V)	1100①				
	Rated DC Input Voltage (V)	640				
	MPPT Voltage Range (V)	180 - 940②				
	No. of MPP Trackers	4	5			
	No. of DC Inputs per MPPT	2/2/2/2	2/2/2/2/2			
	Max. Input Current (A)	44/44/44/44	44/44/44/44/44			
	Max. Short-circuit Current (A)	55/55/55/55	55/55/55/55/55			
	backfeed current to the array (A)	0				
Battery	Battery communication mode	CAN/RS485				
	Battery voltage range (V)	200 - 920				
	Number of battery input	2				
	Max. charge / discharge current (A)	160 (80 × 2)				
Output (Grid)	Rated Output Power (kW)	40	50	60	70	80
	Max. Output Power (kW)	44	55	66	77	88
	AC output rated apparent power (kVA)	40	50	60	70	80
	Max. Apparent Power (kVA)	44	55	66	77	88
	Max. Bypass Input Current (A)	90	112.5	135	157.5	180
	Rated Output Voltage (V)	3L/N/PE, 230 (400)				
	Rated AC Frequency (Hz)	50/60				
	AC output rated current (A)	58	72.5	87	101.4	115.9
	Max. Output Current (A)	66.7	83.3	100	116.7	133.3
	Power Factor	0.8 leading…0.8 lagging				
	Max. total harmonic distortion	<3 % @ Rated Output Power				
	DCI	<0.5 % In				
Output (Back-up)	Rated Output Power (kW)	40	50	60	70	80
	Max. Output Power (kW)	44	55	66	77	88
	Max. Apparent Power (kVA)	120 % - 60 s; 150 % - 10 s				
	Back-up output rated current (A)	58	72.5	87	101.4	115.9
	Max. Output Current (A)	140	210	210	280	280
	Rated Output Voltage (V)	3L/N/PE 230 (400)				
	Rated AC Frequency (Hz)	50/60				
	Voltage harmonic distortion	<3 % @ Linear load				
Efficiency	Max. Efficiency	97.30 %				
	European Efficiency	96.50 %				
	MPPT Efficiency	99.90 %				
	Max battery charging conversion efficiency	98.50 %				
	Max battery discharge conversion efficiency	97.40 %				

Feature	
DC Reverse Polarity Protection	Integrated
Battery input reverse connection protection	Integrated
Insulation Resistance Protection	Integrated
DC Switch	Integrated
AFCI	Optional
Surge Protection	Integrated
Over-temperature Protection	Integrated
Residual Current Protection	Integrated
Islanding protection	Frequency shift, Integrated
AC Over-voltage Protection	Integrated
Overload protection	Integrated
AC Short-circuit Protection	Integrated
Battery Switch	Optional
Diesel Generator Module	Optional

General Data	
Over voltage category	PV: II Main: III
Dimensions (mm)	995 × 778 × 358
Weight (kg)	91
Protection Degree	IP66
Topology	Transformerless
Operating Temperature Range (°C)	-30 - 60 (>45 derating)
Relative Humidity (%)	0 - 100
Operating Altitude (m)	3000
Cooling	Smart Fan Cooling
Noise Level (dB)	≤65
Display	LCD & LED
Communication	WiFi/GPRS/LAN (Optional)

① The maximum input voltage is the maximum DC input voltage that the inverter can withstand exceeding this voltage may cause damage, and such damage is not covered under warranty.

② The inverter's operating voltage range under extreme low temperatures should be within 160V to 960V, not the open circuit voltage range. Exceeding this range may cause the inverter to go into standby mode.