EN

1 Extended technical Data

1.1 KACO blueplanet 50.0 NX3

AC-Power	
Inverter power nominal	50 kVA
Inverter power maximal	50 kVA
Rated current (In)	3*75,8 A [@220V/380V] / 3*72.5 A [@230V/400V] / 3*69.4 A [@240V/415V]
Short circuit current continous (max output fault current)	83.6 A
Power electronics type	IGBT-MLI (self-commutated)
Rated operating voltage	220V / 380V [3/N/PE; 3/PEN], 230V / 400V [3/N/PE; 3/PEN], 240V / 415V [3/N/PE; 3/PEN]
cos phi nominal	≈ 0.80 ind ...0.80 cap
Grid connection	Three-phase
Impedance at 165 Hz *	$R_{165\ Hz} \approx 0{,}51\ \Omega$, $X_{165\ Hz} \approx 0{,}88\ \Omega$
Impedance at 175 Hz *	$R_{175\ Hz} \approx 0{,}52\ \Omega$, $X_{175\ Hz} \approx 0{,}74\ \Omega$
* Scheme in parallel	

Operating behaviour in the event of a short circuit at the inverter output	
Contribution to peak short-circuit current (îp)	200.0 A
Contribution to the initial short-circuit alternating current (Ik" first single period effective value)	83.6 A

Flicker				
Grid impedance angle	30°	50°	70°	85°
Flicker step factor	0,20	0,18	0,15	0,14
Short term flicker	0,17	0,16	0,13	0,12
Note: $S_{k,\ fic}/S_n$ in the fictitious grid was set to	20			

Injection of DC currents
A converter must not feed in more than 0.5% of its rated current or a maximum of 20 mA (whichever is higher) as direct current.

P_{bin} [% P_n]	$P_{bin,\ e\ val}$ [% P_n]	P kW]	$I_{DCcmp\ L1}$ [mA]	$I_{DCcmp\ L2}$ [mA]	$I_{DCcmp\ L3}$ [mA]	$I_{DCcmp\ L1}$ [% I_n]	$I_{DCcmp\ L2}$ [% I_n]	$I_{DCcmp\ L3}$ [% I_n]
30	18	18101,29	198,15	296,31	239,43	0,228%	0,341%	0,275%
40	24	24053,2	242,33	326,43	274,71	0,279%	0,375%	0,316%
60	36	36137,57	302,99	390,41	307,96	0,348%	0,449%	0,354%
70	42	41928,16	279,21	343,13	350,89	0,321%	0,395%	0,404%
100	60	60022,92	335,08	417,66	403,7	0,385%	0,480%	0,464%
[% von Imax] % rated AC current						0,39%	0,48%	0,46%

Tab. 1: DC-Injection measurement values

EN

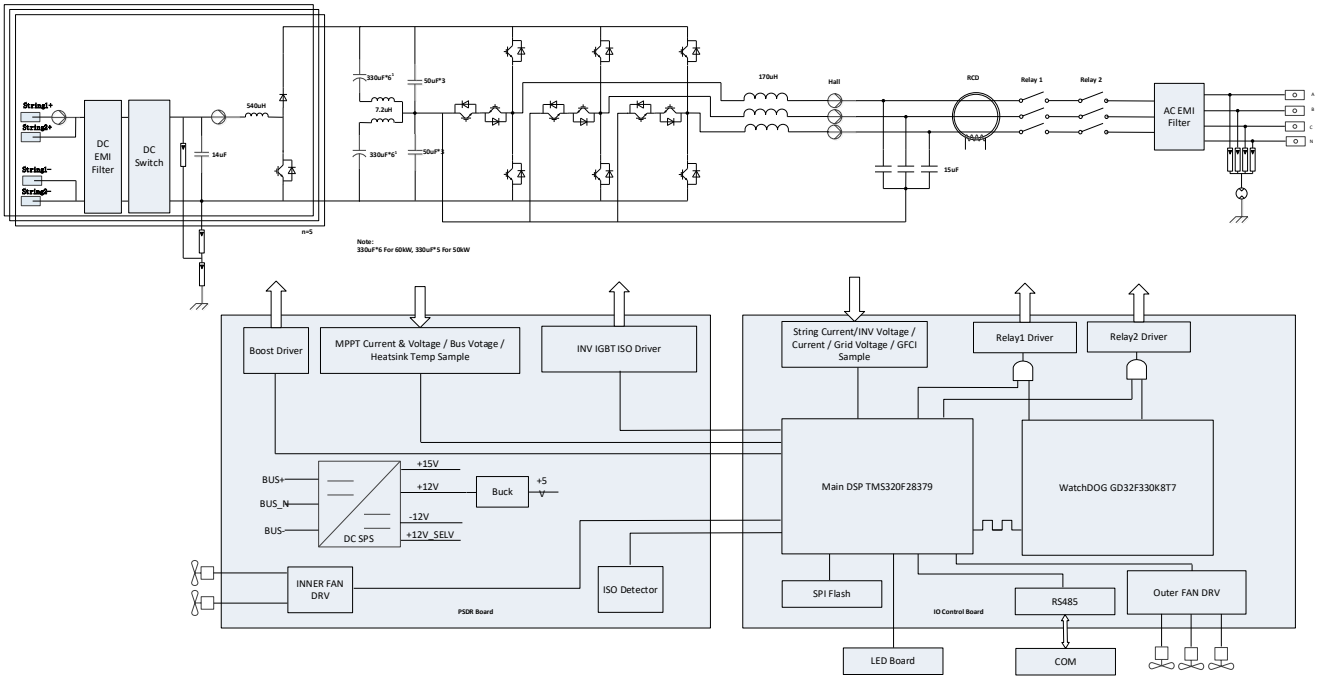

Fig. 1: Block schema blueplanet 50.0-60.0 NX3

Harmonics 50 Hz	**[A]**	**[% In]**
1	72,364	99,86
2	0,095	0,13
3	0,715	0,99
4	0,605	0,83
5	0,359	0,50
6	0,136	0,19
7	0,127	0,18
8	0,203	0,28
9	0,167	0,23
10	0,192	0,26
11	0,070	0,10
12	0,102	0,14
13	0,038	0,05
14	0,145	0,20
15	0,180	0,25
16	0,235	0,32
17	0,340	0,47
18	0,065	0,09
19	0,246	0,34
20	0,123	0,17
21	0,068	0,09
22	0,100	0,14
23	0,099	0,14
24	0,059	0,08
25	0,227	0,31
26	0,083	0,11
27	0,069	0,10
28	0,077	0,11

EN

Harmonics 50 Hz	[A]	[% In]
29	0,133	0,18
30	0,096	0,13
31	0,216	0,30
32	0,091	0,13
33	0,053	0,07
34	0,109	0,15
35	0,152	0,21
36	0,060	0,08
37	0,171	0,24
38	0,065	0,09
39	0,037	0,05
40	0,071	0,10
41	0,136	0,19
42	0,039	0,05
43	0,127	0,18
44	0,053	0,07
45	0,044	0,06
46	0,053	0,07
47	0,114	0,16
48	0,033	0,05
49	0,097	0,13
50	0,041	0,06

Tab. 2: Harmonics 50 Hz blueplanet 50.0 NX3

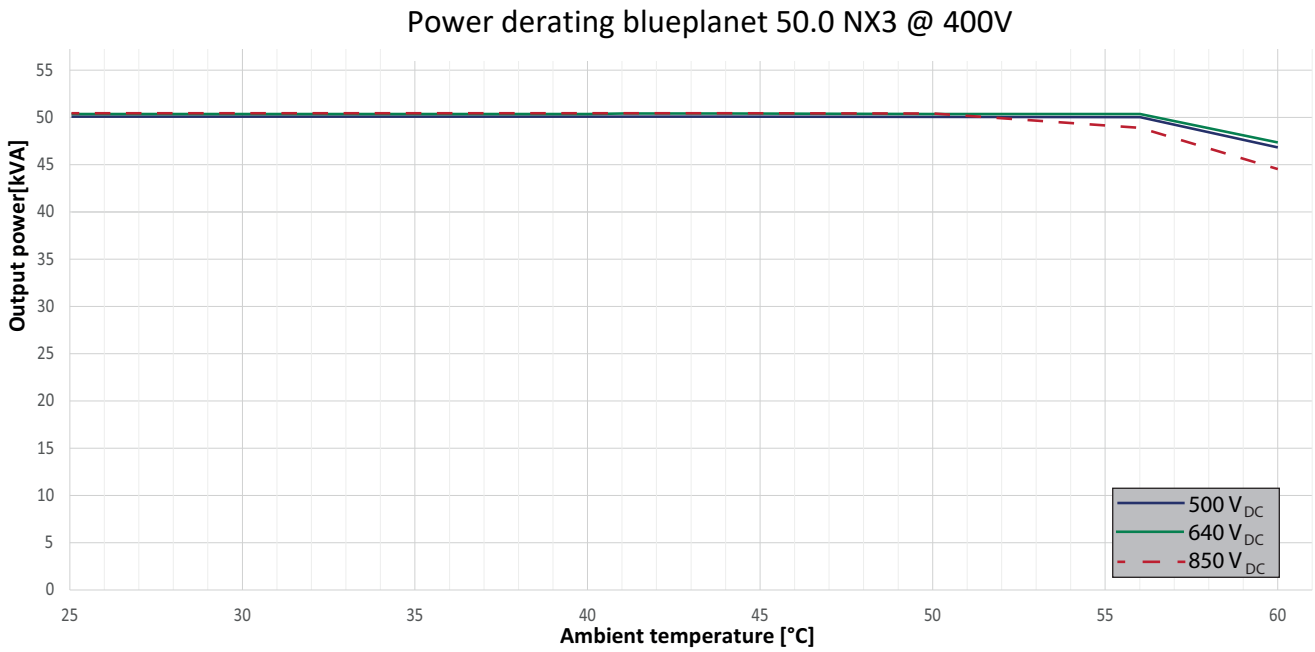

Fig. 2: Power derating blueplanet 50.0 NX3

EN

Efficiency characteristic

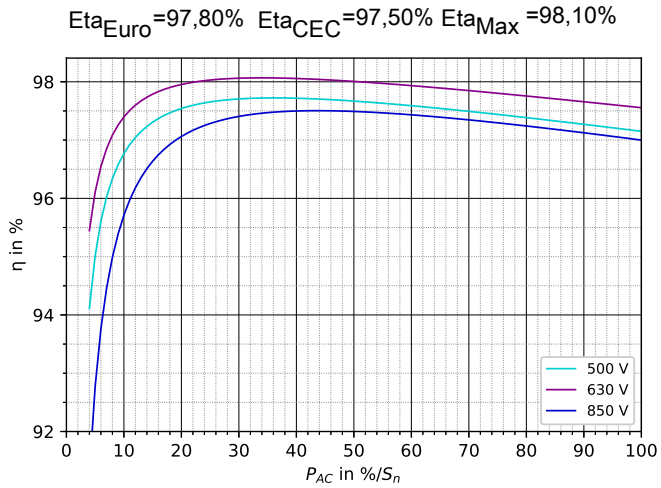

Fig. 3: 2D Diagram blueplanet 50.0 NX3 M5

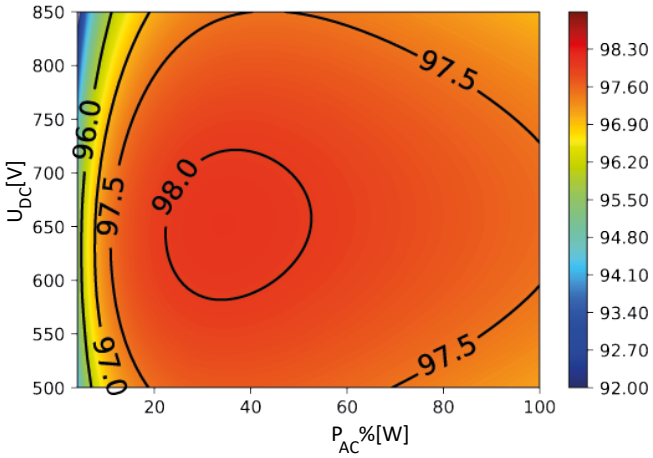

Fig. 4: 3D Diagram blueplanet 50.0 NX3 M5

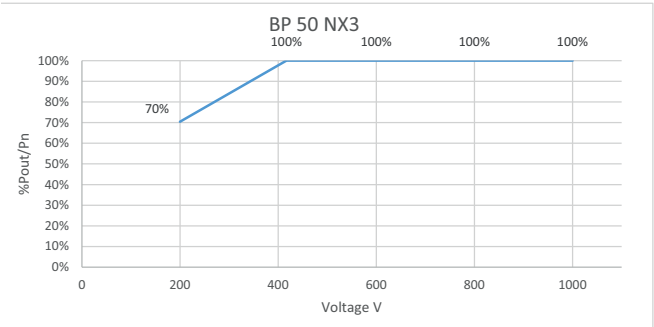

Fig. 5: 2D Diagram %Pout/Pn vs Voltage 50.0 NX3 M2

EN

1.2 KACO blueplanet 60.0 NX3

AC-Power	
Inverter power nominal	60 kVA
Inverter power maximal	60 kVA
Rated current (In)	3*91,0 A [@220V/380V] / 3*87.0 A [@230V/400V] / 3*83.3 A [@240V/415V]
Short circuit current continous (max output fault current)	95.3 A
Power electronics type	IGBT-MLI (self-commutated)
Rated operating voltage	220V / 380V [3/N/PE; 3/PEN], 230V / 400V [3/N/PE; 3/PEN], 240V / 415V [3/N/PE; 3/PEN]
cos phi nominal	≈ 0.80 ind ...0.80 cap
Grid connection	Three-phase
Impedance at 165 Hz *	$R_{165\ Hz} \approx 0{,}51\ \Omega$, $X_{165\ Hz} \approx 0{,}88\ \Omega$
Impedance at 175 Hz *	$R_{175\ Hz} \approx 0{,}52\ \Omega$, $X_{175\ Hz} \approx 0{,}74\ \Omega$
* Scheme in parallel	

Operating behaviour in the event of a short circuit at the inverter output	
Contribution to peak short-circuit current (îp)	200.0 A
Contribution to the initial short-circuit alternating current (Ik" first single period effective value)	95.3 A

Flicker				
Grid impedance angle	30°	50°	70°	85°
Flicker step factor	0,30	0,27	0,23	0,23
Short term flicker	0,26	0,23	0,20	0,20
Note: $S_{k,\ fic}/S_n$ in the fictitious grid was set to	20			

Injection of DC currents
A converter must not feed in more than 0.5% of its rated current or a maximum of 20 mA (whichever is higher) as direct current.

P_{bin} [% P_n]	$P_{bin,\ e\ val}$ [% P_n]	P kW]	$I_{DCcmp\ L1}$ [mA]	$I_{DCcmp\ L2}$ [mA]	$I_{DCcmp\ L3}$ [mA]	$I_{DCcmp\ L1}$ [% I_n]	$I_{DCcmp\ L2}$ [% I_n]	$I_{DCcmp\ L3}$ [% I_n]
30	18	18101,29	198,15	296,31	239,43	0,228%	0,341%	0,275%
40	24	24053,2	242,33	326,43	274,71	0,279%	0,375%	0,316%
60	36	36137,57	302,99	390,41	307,96	0,348%	0,449%	0,354%
70	42	41928,16	279,21	343,13	350,89	0,321%	0,395%	0,404%
100	60	60022,92	335,08	417,66	403,7	0,385%	0,480%	0,464%
[% von Imax] % rated AC current						0,39%	0,48%	0,46%

Tab. 3: DC-Injection measurement values

EN

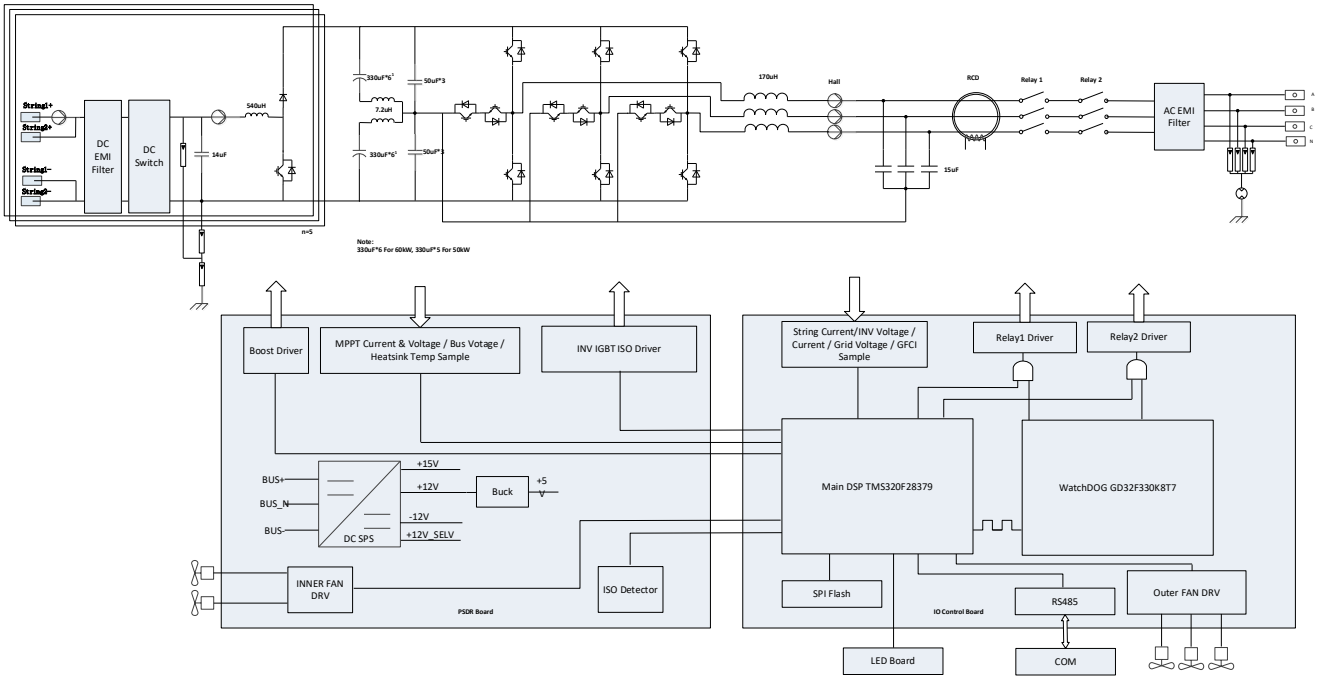

Fig. 6: Block schema blueplanet 50.0-60.0 NX3

Harmonics 50 Hz	**[A]**	**[% In]**
1	85,610	98,45
2	0,093	0,11
3	0,816	0,94
4	0,605	0,70
5	0,377	0,43
6	0,133	0,15
7	0,139	0,16
8	0,204	0,23
9	0,187	0,22
10	0,153	0,18
11	0,075	0,09
12	0,121	0,14
13	0,046	0,05
14	0,157	0,18
15	0,170	0,20
16	0,239	0,27
17	0,391	0,45
18	0,085	0,10
19	0,150	0,17
20	0,090	0,10
21	0,088	0,10
22	0,093	0,11
23	0,107	0,12
24	0,069	0,08
25	0,223	0,26
26	0,081	0,09
27	0,058	0,07
28	0,106	0,12

EN

Harmonics 50 Hz	[A]	[% In]
29	0,111	0,13
30	0,112	0,13
31	0,232	0,27
32	0,097	0,11
33	0,068	0,08
34	0,105	0,12
35	0,141	0,16
36	0,069	0,08
37	0,188	0,22
38	0,070	0,08
39	0,053	0,06
40	0,081	0,09
41	0,141	0,16
42	0,051	0,06
43	0,139	0,16
44	0,067	0,08
45	0,046	0,05
46	0,056	0,06
47	0,121	0,14
48	0,039	0,04
49	0,102	0,12
50	0,056	0,00

Tab. 4: Harmonics 50 Hz blueplanet 60.0 NX3

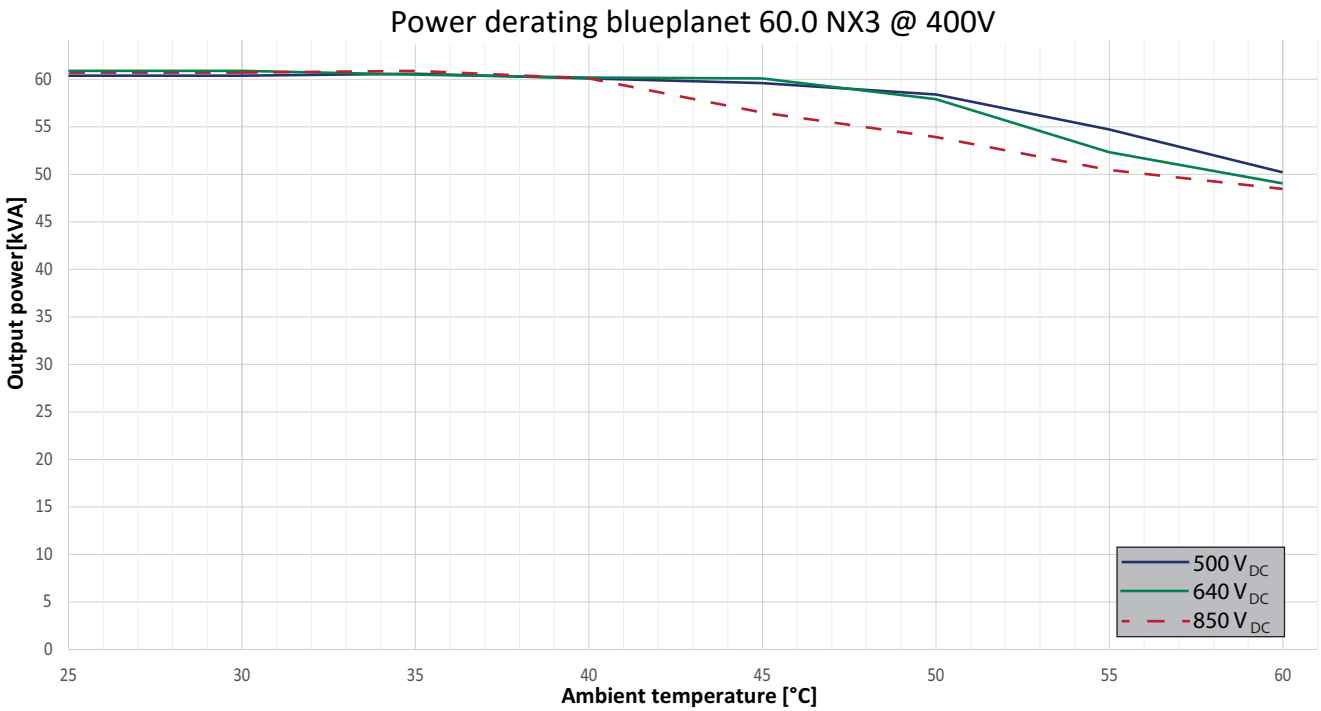

Fig. 7: Power derating blueplanet 60.0 NX3

EN

Efficiency characteristic

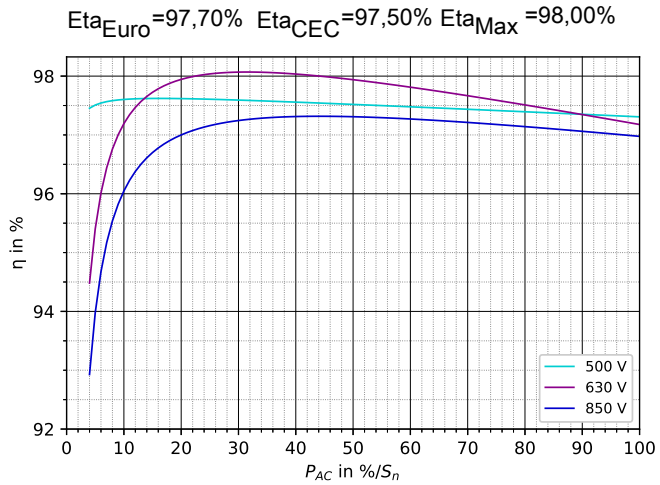

Fig. 8: 2D Diagram blueplanet 60.0 NX3 M5

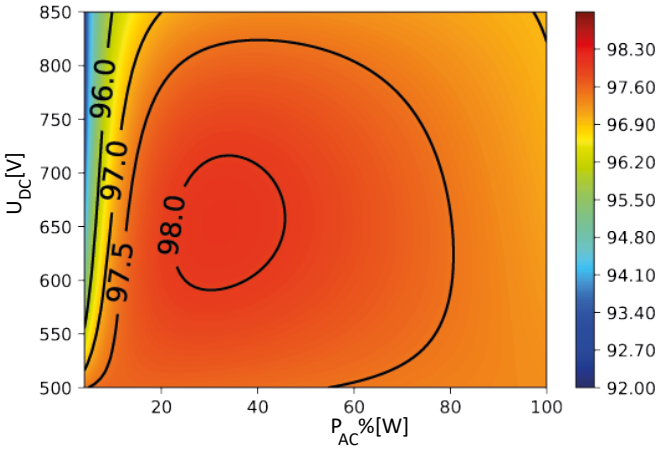

Fig. 9: 3D Diagram blueplanet 60.0 NX3 M5

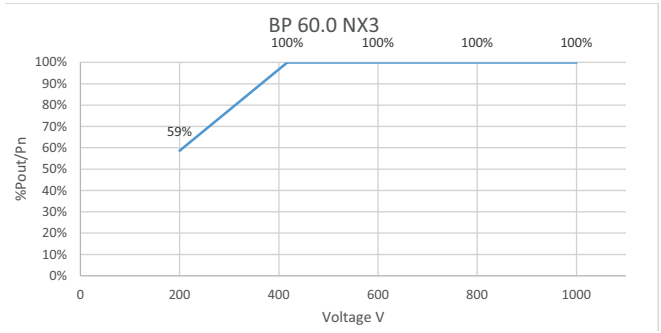

Fig. 10: 2D Diagram %Pout/Pn vs Voltage 60.0 NX3 M2

3016460-03-250407

The text and figures reflect the current technical state at the time of printing. Subject to technical changes. No liability for printing errors.

KACO new energy.

Werner-von-Siemens-Allee 1 · 74172 Neckarsulm · Germany · Tel. +49 7132 896-0 · info@kaco-newenergy.de · www.kaco-newenergy.de