

KACO new energy.

Powador 6400xi | 6650xi 7200xi | 8000xi

Instruction Manual

- Operator
- Authorized Electricians

product design award 2006

The installation instructions for skilled and authorised electricians begin after the operating instructions

For the operator

Operating instructions

Powador 6400xi / 6650xi / 7200xi / 8000xi

General notes 4
1 About this documentation 4
1.1 Retention of the documents....4
1.2 Symbols used 4
1.3 CE marking....4
1.4 Type label....4
2 Safety instructions and regulations 5
3 Notes concerning installation and operation....5
3.1 Intended use 5
3.2 Factory warranty and liability....5
3.3 Service 6
4 Operation....6
4.1 Overview of controls and displays 6
4.2 LED displays 7
4.3 Keys "1" and "2" 7
4.4 Level 1 menu - display menu....8
4.5 Level 2 menu - "Set" mode 9
4.6 Night start button 10
4.7 DC isolator 10
4.8 DC string fuse 10
4.9 The RS485 interface 11
4.10 Limiting during asymmetric supply 11
4.11 The communications connection between the inverters....11
4.12 SYM bus test 12
4.13 The 6400xi/6650xi/7200xi/8000xi and Powador-proLOG 12
4.14 Display 12
5 Troubleshooting....17
6 Recycling and disposal....19

General notes

With your purchase of a KACO new energy GmbH inverter, you have opted for reliable and powerful technology and now benefit from KACO new energy GmbH's many years of experience in the areas of inverter technology and power electronics.
Powador 6400xi / 6650xi / 7200xi / 8000xi inverters are highly efficient and sturdy inverters without transformers or fans. An illuminated display and intuitive menu navigation help you display the most important information about the inverter's power grid supply. The mounting plate included in the delivery ensures optimal, easy wall installation.
The inverter's data can be transferred to a PC and viewed there via the serial port. With protection class IP54, the units are ready for use for all environmental conditions. The inverters can also be used in agriculture and industry without hesitation.

1 About this documentation

The following notes will help you find your way throughout the documentation. Additional documents are applicable in conjunction with these operating and installation instructions.
We assume no liability for any damage caused by failure to follow these instructions.

Other applicable documents

When installing the inverter, be sure to observe all assembly and installation instructions for components and parts of the system. These instructions are included with the respective components and other parts of the system.

1.1 Retention of the documents

These documents must be kept with the system and available at all times.

1.2 Symbols used

Please observe the safety notes in these operating instructions when operating the inverter.

DANGER

Failure to observe a warning indicated in this manner will directly lead to serious bodily injury or death.

WARNING

Failure to observe a warning indicated in this manner may directly lead to serious bodily injury or death.

CAUTION

Failure to observe a warning indicated in this manner may lead to minor or moderate bodily injury or to serious damage to property.

ATTENTION

Failure to observe a warning indicated in this manner may lead to damage to property.

NOTE

Useful information and notes.

ACTION

This symbol indicates that a certain action is required.

IMPORTANT

Failure to observe this information may result in reduced convenience or impaired functionality.

1.3 CE marking

The CE marking is used to document that the inverter indicated on the type label fulfills the fundamental requirements of the following relevant directives:
– Directive concerning electromagnetic compatibility (Council Directive 2004/108/EC)
– Low voltage directive (Council Directive 2006/95/EC).

1.4 Type label

The type label showing the exact designation of the unit is located on the support plate on the underside of the housing.

Danger due to lethal voltages.

2 Safety instructions and regulations

DANGER

Danger due to lethal voltages.

Lethal voltages are present within the unit and on the power supply lines. Therefore, only skilled and authorised electricians may install and open the unit.

Even when the unit is switched off, high contact voltages may still be present inside the unit.

Accident prevention regulations

The inverters must be installed by a skilled and authorised electrician who is responsible for observing existing standards and regulations.

The proper and safe operation of these units requires proper transportation, storage, assembly and installation, as well as careful operation and maintenance.

Only those who have read and understood the operating instructions may operate the inverter.

Modifications

Modifying inverters is generally prohibited. To make changes to surroundings of the inverter, you must always consult a skilled and authorised electrician as the electrician is responsible in this area.

CAUTION

Risk of damage due to improper modifications. Never modify or manipulate the inverter or other components of the system.

Transport

The inverters are subjected to extensive testing and inspection in our test field. This is how we ensure the high quality of our products. Our inverters leave our factory in proper electrical and mechanical condition. Special packaging ensures that nothing can happen during transport. However, transport damage cannot be ruled out completely. The shipping company is responsible in this case.

Thoroughly inspect the inverter upon delivery. If you discover any damage to the packaging which indicates that the inverter may be damaged, or if you note any visible damage to the inverter, notify the responsible shipping company immediately.

If necessary, KACO new energy GmbH will assist you. Any report of damage must be received by the shipping company in writing within six days after receipt of the goods.

When transporting the inverter, use the original packaging or equivalent packaging to ensure that the inverter is transported safely.

3 Notes concerning installation and operation

3.1 Intended use

The Powador inverter converts the DC power generated by the photovoltaic (PV) modules into AC power and feeds this into the power supply.
Powador inverters are built according to the state of the art and approved safety rules. However, improper use may cause lethal hazards for the operator or third parties or may damage the units and other property.
The inverter may only be operated with a permanent connection to the public power grid. The inverters are not intended for mobile use.

Any other or additional use is not considered the intended use. The manufacturer/supplier is not liable for damage caused by such unintended use. Damage caused by such unintended use is at the sole risk of the operator.

"Intended use" also includes adherence to the operating and installation instructions. Your authorised electrician will register you with the power supply company and have your photovoltaic installation approved by the supply grid operator. Some of the documents which you require in order to register your photovoltaic installation and have it approved are included with the installation instructions.

3.2 Factory warranty and liability

KACO new energy GmbH grants a warranty of seven years on Powador inverters, starting from the date of installation, but at most 90 months after shipment by KACO new energy GmbH.

During this time, KACO new energy GmbH guarantees the proper function of the units and free-of-charge repair at the factory in the event of a defect for which we are responsible.

Contact your specialty dealer or installer if your unit exhibits a defect or fault during the warranty period.

Warranty claims are excluded in the following cases:
– Use of the units in ways not intended
– Improper installation and installation that does not comply with standards
– Improper operation
– Operating the units with defective protective equipment
– Unauthorised modifications to the units or repair attempts
– Influence of foreign objects and force majeure (lightning, overvoltage, severe weather, fire)
– Insufficient ventilation of the unit
– Failure to observe the relevant safety regulations
– Transport damage.

All warranty claims must be handled at the premises of KACO new energy GmbH. To do this, the unit should be returned in its original or equivalent packaging. The costs for these services cannot be borne by KACO new energy GmbH.

KACO new energy GmbH will only perform warranty services when the faulty unit is returned to KACO new energy GmbH together with a copy of the invoice which was issued by the dealer to the user. The type label on the unit must be fully legible. If these requirements are not fulfilled, KACO new energy GmbH reserves the right to deny warranty services.

The warranty period for repairs or replacement shipments is six months after shipment. However, it continues at least until the end of the original warranty period for the shipped object.

3.3 Service

We have placed special emphasis on the quality and longevity of our inverters, beginning in the product development phase. More than 60 years of experience in the field of current inverters support us in this philosophy.

However, in spite of all quality assurance measures, faults may occur in rare cases. If this happens, KACO new energy GmbH will provide you with the maximum support possible. KACO new energy GmbH will make every effort to remedy such faults quickly and without a great deal of bureaucracy. Contact our service department directly.

Phone: +49(0)7132-3818-660

4 Operation

CAUTION

Incorrect use is prohibited.

The supply process begins in the morning when there is enough light available to provide a certain minimum voltage for the inverter. After the end of a country-specific startup period (see Instructions for skilled Electricians, Chapter 4, Technical Data), the inverter will start its grid-feeding operation.
When the minimum voltage is unavailable due to darkness, the supply operation ends and the inverter switches off.

4.1 Overview of controls and displays

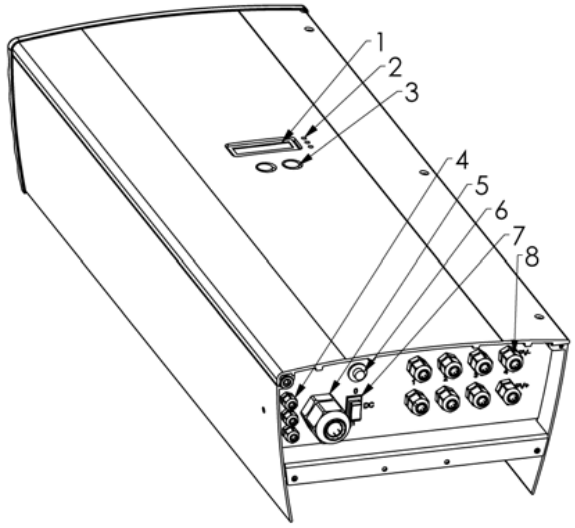

Figure 4.1: **Overview of the Powador**

Key

1 **Display**
Display of measured values and settings
2 **LED displays**
Display of operating state
3 **Operating keys**
Switch between displaying and setting parameters
4 **Cable feedthrough for RS485 interfacecable**
5 **Cable fitting for AC connection**
6 **Start button**
For activating the displays once it gets dark
7 **Manual DC isolator**
Used to disconnect the inverter from the PV generator
8 **Plug connections and cable feedthroughs for the DC connection.**

4.2 LED displays

During standard operation, photovoltaic modules generate voltage as soon as there is sufficient insolation. When this voltage is present at the inverter in a certain amount for a certain period of time, the inverter starts supplying power to the grid.
The inverters are equipped with three LEDs that provide information about the various operating states in the following ways.



Figure 4.2 **LED display**

LED (1) (green):

The LED starts to light up once the photovoltaic module voltage is more than 300 V and goes out once the module voltage is less than 250 V.The LED (1) indicates that the inverter is active and the inverter control system is activated. If this LED does not light up, the inverter cannot supply power to the grid. In normal operating mode, the LED begins to light up in the morning when it is bright enough and goes out when it gets dark.

LED (2) (green):

The LED always lights up when the inverter is supplying power to the grid. To achieve this, the photovoltaic module voltage must exceed the value of 410 V (factory setting) and there must be enough power available from the PV generator. If the grid-feeding operation is interrupted due to insufficient power, the inverter will wait for a defined period of time (country-specific setting) before resuming its grid-feeding operation (see Instructions for skilled Electricians, Chapter 4, Technical Data). Therefore, LED (2) cannot light up unless LED (1) is already lit up.

In normal operating mode, the inverter starts supplying power to the grid in the morning and ends when it becomes increasingly dark. On dull days and during the winter months, the unit may stop supplying power to the grid from time to time and then started anew, depending on the PV generator and current supply power. This process may have to be repeated several times particularly in the morning and evening. This is not a sign of faulty operation. It is normal operating behaviour.

LED (3) (red):

The LED shows that unit has stopped supplying power to the grid because of a fault.
The following faults activate LED (3):

- Power supply overvoltage or undervoltage in one of the three phases
- Failure of phase L2 or phase L3
- Generator power is too high
- Shutdown because temperature is too high
- Unit defect
- Residual current is too high (RCD type B)
- Overfrequency or underfrequency
- Insulation fault
- Communication fault
- DC supply fault
- Voltage transformer fault
- Self-test fault
- RCD type B module error.

Wait for approx. 10 minutes to see if the fault is only temporary. Contact your authorised electrician if this is not the case. On elimination of the fault, the grid-feeding operation is started after a country-specific period of time (see Instructions for skilled Electricians, Chapter 4, Technical Data).

IMPORTANT

In the event that the supply phase is lost (power failure on the public grid), LED (3) does not light up. If this happens, all LEDs and the display go out. The inverter is shut down completely.
The inverter can only start operating normally once the supply phase is present again.

Check whether the fault is due to a general power failure or whether the fuse between the meter and inverter is blown. Contact your authorised electrician if the fuse is blown and if it is a power failure, simply wait until the fault is resolved. The system restarts automatically.

4.3 Keys “1” and “2”



Figure 4.3 **Operating keys of Powador**

Key “1” is required for switching between the various displays for measured values and data. Settings, e.g. cut-off values, can be made with key “2”. Menu navigation is divided into two levels. Measured values, e.g. solar generator voltage and yields, can be read in level 1 (“Display” mode). Only key “1” is activated here.
In level 2 (“Set” mode), key “1” is also used to navigate through the individual displays and settings are made with key “2”.

ACTION

By pressing key “1” for approx. 1 second, you can select which measured value to display.
The menus are continuous, i.e. if you are at the last entry of a menu, the first entry is displayed again when you press key “1” (see figure 4.4).

4.4 Level 1 menu - display menu

The Powador inverter is set to the display menu after starting up. Measured values and all meters are displayed here. Use key "1" to navigate through the individual menu items.

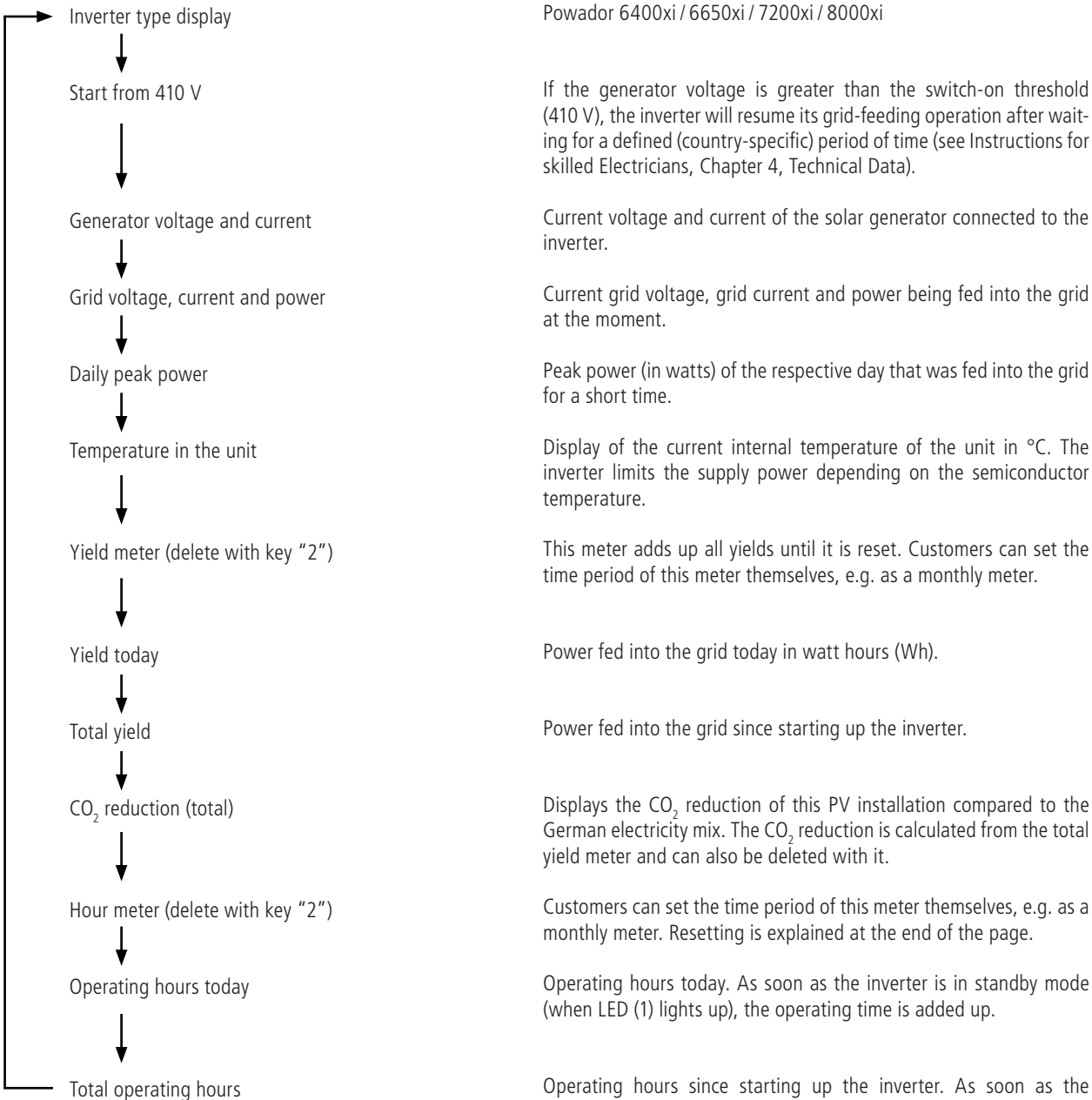

Figure 4.4: **"Display" mode menu**

Explanation of the "Display" mode menu items

"Yield meter" and **"Hour meter"** are meters that can be reset separately from the other meters. When the "Yield meter" or "Hour meter" are displayed, you can press key "2" to access the display "Delete meter?". You must now select "yes" with key "2". Key "1" confirms deletion and the display returns to the deleted meter. "Yield meter" and "Hour meter" are always deleted together. For this reason, it is enough to delete only one of them.

4.5 Level 2 menu - "Set" mode

ACTION

To get to "Set" mode, press keys "1" and "2" at the same time until the software version is displayed in "Set" mode. Use key "1" to switch to the next menu item and use key "2" to make any changes to the menu items. The setting value increases each time you press key "2". Once the maximum value has been reached, the value jumps to the minimum setting. See figure 4.5 for the various settings.

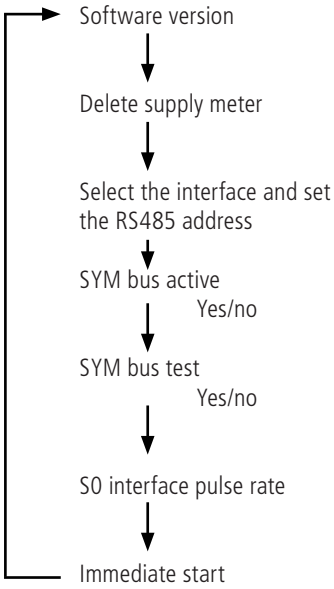

Figure 4.5: **"Set" mode menu**

Deleting the supply meter

When the supply meter is deleted, all meters (yield meter, yield today, total yield, CO_2 reduction, daily peak power, hour meter, operating hours today, total operating hours) are reset to zero.
To delete the meters, select "yes" with key "2" and confirm with key "1". The code number required is 2 and is entered with key "2". If you press key "1" again, all meters are deleted and the "Supply meter deleted" is displayed as a confirmation.

NOTE

All meters can only be deleted. It is not possible to set a meter.

Interface and address setting

As a standard feature, the Powador 6400xi / 6650xi / 7200xi / 8000xi have one RS485 interface, which is used for communication between the inverters as well as for communication with the Powador-proLOG.

Once the RS485 interface is activated, press key "1" to to set the address. You can set the address from 1 to 32 by pressing key "2" successively.
The address jumps back to 1 afterwards. The RS485 interface is used for communication with the Powador-proLOG. If several inverters are connected to one Powador-proLOG, each address may only occur once. This enables 32 Powador inverters to be monitored with one Powador-proLOG.

S0 interface pulse rate

The S0 interface is an electrically isolated transistor output. This interface is designed according to DIN 43864 ("current interface for transmitting pulses from a pulsing meter to a tariff metering device").
The pulse rate of the S0 interface can be selected in three steps: 500, 1000 and 2000 pulses/kWh. Due to these tolerances, the yield pulses emitted may deviate from the values of your supply grid operator's supply meter by up to 15 %.

ACTION

Settings are only saved when you leave "Set" mode. If 2 minutes elapse without a key being pressed, "Set" mode is exited automatically. You can exit "Set" mode immediately by pressing both keys. "Settings have been saved" appears on the display for 4 seconds as a confirmation. All settings are now permanently saved in the Powador inverter.

Immediate start

When your installation is being accepted by your power supply company or for testing, the inverter can also be started without any waiting period.

ACTION

Hold the key "2" down until the inverter switches on a short time later (relays switch audibly) and the green supply LED (2) lights up. If the solar generator power is too low, the inverter stops supplying power to the grid after a short while.

4.6 Night start button

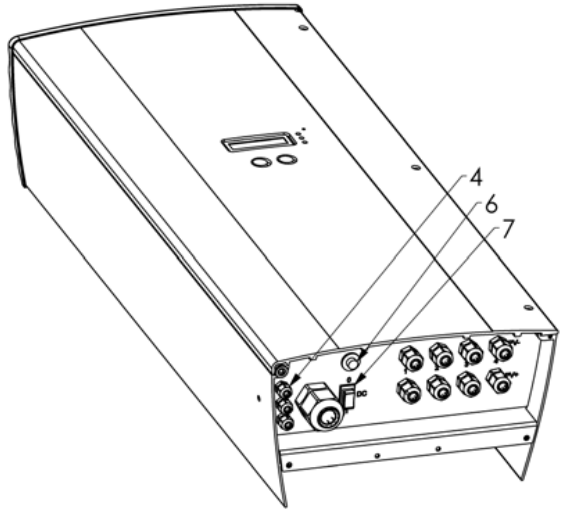

Figure 4.6: **Underside of the Powador**

Key

4 **Cable feedthrough for RS485 interface cable**

6 **Night start button**
For activating the displays once it gets dark.

7 **Manual DC isolator**
Disconnects the inverter from the PV generator.

The unit switches off in the evening once it gets dark. The display no longer functions then. To access the values of the current day (daily yield, daily operating hours and max. supply power) in spite of this, the device can even be activated at night by pressing the start button on the underside of the inverter.

ACTION

To do so, press key "6" (see figure 4.6 - (6)) on the underside of the unit for approx. 5 seconds until the display appears.

You can now scroll through the menu and access saved values. The device automatically switches off again if 1 minute elapses without a key being pressed.
The "Hour meter", "Total operating hours", "Yield meter" and "Total yield" data is constantly saved and added up. Even if the inverter is switched off constantly, this data is not lost. The daily yield, daily operating hours and max. daily supply power are available until the next morning and are only deleted once PV generator voltage returns.

4.7 DC isolator

The inverters have an internal DC isolator that disconnects the inverter from the photovoltaic generator if there is a fault. There is a toggle switch on the underside of the 6400xi / 6650xi / 7200xi / 8000xi so that this function can also be used manually. This can also be used to manually switch off the internal relay.



Figure 4.7 **Toggle switch on the underside of the unit**

IMPORTANT

In normal operating mode, the switch must be switched on. If not, power cannot be supplied to the grid.

4.8 DC string fuse

Powador 6400xi / 6650xi / 7200xi / 8000xi inverters have four integrated string fuses to protect your module from overcurrents if faults occur. Each of these is designed for a current of 10 A.

WARNING

Replace a defective fuse only with one of the same type.

Always use four fuses of the same type.

Failure to observe this may cause arcing which results in a hazard to health and to the unit.

4.9 The RS485 interface

Powador inverters are equipped with an RS485 interface to enable remote monitoring of your photovoltaic installation. Several inverters can be monitored at the same time with this interface. Using the Powador-proLOG series, you can receive your yield and operating data or error messages by text message or e-mail. This monitoring option is especially recommended for situations where you are unable to check the functionality of your installation on-site at regular intervals, i.e. if your domicile is too far away from the installation site. In addition, you can use the Powador link within your installation to bridge long distances between several inverters or between an inverter and the Powador-proLOG by means of a wireless RF connection. Contact your installer if you wish to add remote monitoring to your system.

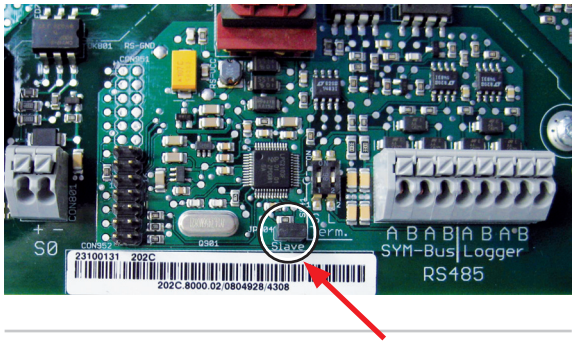

Figure 4.8: **RS485 interface and slave jumper**

4.10 Limiting during asymmetric supply

In order to limit the asymmetry between the phases while supplying power to the grid to the max. permitted 4.6 kW (according to VDEW guidelines for connection and parallel operation of in-plant generation on the low-voltage grid, 4th edition 2001), Powador 6400xi / 6650xi / 7200xi / 8000xi units are equipped with an additional communication processor. This processor

– Cyclically determines the power that is currently being fed into the grid from the connected inverters in its group at intervals of a few seconds.
– From this, it calculates the maximum permissible supply power (taking the 4.6 kW mentioned above into account) and
– Reports this value to the affected inverters as the upper limit of the power that can be supplied to the grid.

4.11 The communications connection between the inverters

The Powador 6400xi / 6650xi / 7200xi / 8000xi units are designed to be used in groups consisting of 3 inverters each. If not, the VDEW guidelines mentioned above would be violated. The inverters are distributed over all three phases for this.
In addition, a communications connection must be established between the inverters in the group. This is described below.

Each group requires just one master inverter.

– To do this, select one inverter, and remove the jumper labelled "Slave" from it (see figure 4.8). It is helpful to mark this inverter uniquely (see below).
– All the inverters of a group must be connected with each other.
  In order for the master inverter to communicate with the others, all three inverters must be connected via the RS485 interface that is labelled "Sym". To do this, the "A" terminals of the Sym block of all three 6400xi / 6650xi / 7200xi / 8000xi in the group should be connected to each other. The "B" terminals should be connected in the same manner (see figure 4.8). A twisted, shielded data cable, such as an ISDN cable, is required for this.

All inverters of a group require a unique address. The three inverters must be distinguishable from each other in order to communicate with them. To do this, they must be assigned a unique address in the range from 1 to 32. For example, if the installation consists of just three inverters, the master inverter could be assigned the address "1" and the two others could be assigned "2" and "3", respectively.

IMPORTANT

The addresses that are used must be unique throughout the entire system. For example, if the complete system consists of more than three 6400xi / 6650xi / 7200xi / 8000xi inverters, each joined into groups of three, the first group could be given addresses 1, 2 and 3, the second group could be given addresses 4, 5 and 6, etc. Each inverter's address can be specified using the "Set" menu (see chapter 4.5).

As the final step, the SYM bus must be switched to active in the menu. This must be done for all three inverters in a group. As delivered, the SYM bus is deactivated. The group is now set up.

4.12 SYM bus test

The Powador 6400xi / 6650xi / 7200xi / 8000xi have an integrated SYM bus test to test the wiring and the software settings of the three inverters that are connected together. This can only be activated if the SYM bus itself is activated. To do this, use key "2" to select "yes" in the "SYM bus active" menu of all units.

In order to begin the SYM bus test, use key "2" to select "yes" in the "SYM bus test active" menu on one inverter. Then, the display shows the current inverter address and LED (1) begins to flash on all inverters that are connected into a group of three.

NOTE

The SYM bus test may require up to 30 seconds to start automatically on the connected inverters.

4.13 The 6400xi / 6650xi / 7200xi / 8000xi and Powador-proLOG

We would like to mention once again that all addresses in the entire system must be unique and cannot be assigned multiple times. This does not change even when groups of three 6400xi / 6650xi / 7200xi / 8000xi units are formed. The data loggers continue to consider the individual 6400xi / 6650xi / 7200xi / 8000xi independent units; thus, they require individual addresses.
However, there is an exception when the 6400xi / 6650xi / 7200xi / 8000xi groups are connected to the Powador-proLOG: The Powador-proLOG is connected only to the master inverter of a group, namely with the RS485 interface labelled "Logger" (see fig. 4.8). The master inverter in a group reports the data of all three units to the Powador-proLOG. Thus, in regard to configuration, etc., no changes need to be made for the Powador-proLOG. The wiring is shown in figure 4.9.

4.14 Display

Inverters in the Powador xi series have a back-lit LCD (see figure 4.1 - (1)), which shows measured values and data.
In normal mode, the backlighting is switched off. As soon as you press one of the keys, the backlighting is activated. If approx. 1 minute elapses without a key being pressed, it switches off.

IMPORTANT

Due to measuring tolerances, the measured values may not always correspond to the actual values. The measuring sensors of the inverter have been selected to ensure maximum solar yields.

Due to these tolerances, the daily yields displayed on the inverter may deviate from the values of your supply grid operator's supply meter by up to 15 % .

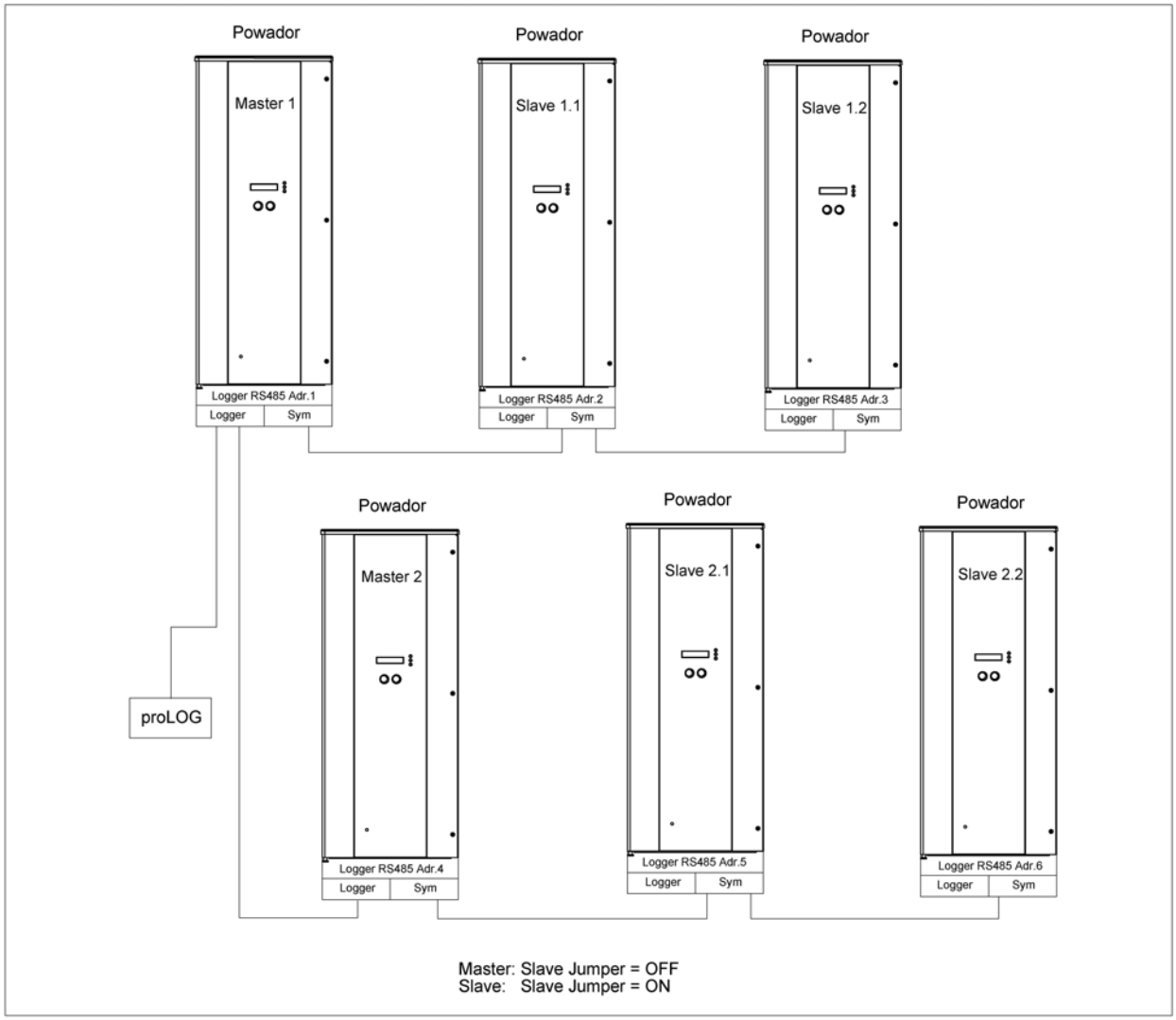

Figure 4.9: **Example of master/slave wiring: Powador 6400xi / 6650xi / 7200xi / 8000xi**

Status	Explanation	Comment
0	Inverter has just switched on	Only shortly after being first switched on in the morning.
1	Wait for start	Self-test is complete, the Powador will start supplying power to the grid within a few seconds.
2	Wait for switch-off	Generator voltage and power is too low. Status before it goes into night shutdown.
3	Constant voltage regulator	When the unit begins supplying power to the grid, power is briefly supplied to the grid with a constant generator voltage (80 % of the measured no-load voltage).
4	MPP regulator, constant search movement	If insolation is low, power is fed into the grid with a searching MPP regulator.
5	MPP regulator, no search movement	If insolation is high, power is fed into the grid with a stationary MPP regulator for maximum yields.
6	Wait mode before supplying power to the grid, test the grid and solar voltage	The inverter stops supplying power to the grid because the power from the PV modules is too low (e.g. after dusk sets in). If the generator voltage is higher than the switch-on threshold (410 V), the inverter begins the grid feed once again after a country-specific waiting period (see Installation Instructions, section 4, Technical Data).
7	Wait mode before self-test, test the grid and solar voltage	The inverter waits until the generator voltage exceeds the switch-on threshold and begins the selftest of the relays after a country-specificwaiting period (see Installation Instructions, section 4, Technical Data).
8	Relay self-test	Inspection of the grid relays before supplying power to the grid.
10	Excess temperature shutdown	The inverter switches off if it overheats (heat sink temperature > 85 °C) due to an ambient temperature that is too high and insufficient air circulation.
11	Power limitation	Protective function of the inverter used when too much generator power is delivered or when the heat sink of the unit is hotter than 75 °C.
12	Overload shutdown	Protective function of the inverter used when too much generator power is delivered.
13	Overvoltage shutdown	Protective function of the inverter used when the grid voltage L1 is too high.
14	Grid interference (3-phase monitoring)	Protective function of the inverter used when the measured values of one of the three grid phases are outside of the permitted tolerance. Causes of problems with the grid: Undervoltage, overvoltage, underfrequency, overfrequency, fault with the external conductor.
15	Transition to night shutdown	Inverter switches from stand-by mode to night shutdown mode.
18	RCD shutdown	The residual current is too high, the integrated AC/DC-sensitive residual current circuit breaker has registered a leakage current to the PE that is higher than permitted.
19	Insulation resistance is too low	Insulation resistance of PV - / PV + to PE < 1.2 MΩ.
30	Voltage transformer fault	The current and voltage measurements in the inverter are improbable.
31	RCD module fault	A fault occurred in the AC/DC-sensitive residual current circuit breaker.
32	Self-test fault	A fault occurred when inspecting the grid relays, a grid relay is not functioning properly.
33	DC supply fault	The DC supply to the grid was too high.
34	Communication fault	A fault occurred during internal data transfer.

Table 4.1: **Explanation of the operating states**

Display	Explanation
Problem with grid due to undervoltage Lx	The voltage of a grid phase is too low, power cannot be fed into the grid. Each of the defective phases is displayed (undervoltage).
Problem with grid due to overvoltage Lx	The voltage of a grid phase is too high, power cannot be fed into the grid. Each of the defective phases is displayed (overvoltage).
Problem with grid due to external conductor voltage	The phase shifts of the external conductor voltages are not correct. There is no proper three-phase current present.
Problem with grid due to overvoltage L1	Overvoltage shutdown due to an increase in the voltage based on the increased output resistance of grid connection L1.
Problem with grid due to underfrequency	The grid frequency is too low.
Problem with grid due to overfrequency	The grid frequency is too high.
DC supply fault	The DC supply to the grid has exceeded the permitted limit value. This DC supply to the grid can be impressed upon the Powador inverter by the grid. In this case, there is no fault in the inverter.
Residual current shutdown	If the inverter detects a jump in the residual current that is greater than 30 mA, the unit switches off (in accordance with VDE0126-1-1).
RCD module fault	A malfunction occurred in the AC/DC-sensitive residual current circuit breaker.
Self-test fault	Inspection of the internal grid cut-off relay failed.
Communication fault	A fault occurred during internal data transfer.
Voltage transformer fault	The current and voltage measurements in the inverter are improbable. This can be brought about by very energetic weather when changes rapidly occur between low supply power (e.g. 200 W) and high supply power (e. g. maximum supply power).
Insulation fault in the generator	The insulation resistance on the DC side is <1.2 MΩ. Power cannot be supplied to the grid. The insulation resistance of the PV modules must be checked.
Temperature in the unit is too high	The temperature in the unit has become too high (>85 °C). Once the internal temperature exceeds 75 °C, the inverter limits the power and levels off between 75 °C and 80 °C. An internal temperature of 85 °C is only reached if convection cooling is prevented from the outside, e.g. by covering the cooling fins.
Input power is too high	The power of the modules was too high for a short time. This can happen if the weather is very energetic. To prevent the inverter from shutting down, power limitation usually stops power at the input of the inverter that is too high.
Problem with average voltage of grid	The grid voltage measurement averaged over ten minutes in accordance with EN 50160 exceeded the maximum permitted limit value.

Table 4.2: **Fault messages**

Error messages

When these error messages are displayed, the unit stops supplying power to the grid, the red LED (3) lights up and the fault alarm relay is triggered. This fault correction lasts for 30 seconds. Afterwards, the red fault LED (3) goes out, the fault alarm relay is deactivated and the display shows that it is ready to supply power to the grid again. If the fault is no longer present, the Powador inverters start feeding into the grid again a country-specific length of time (see Installation Instructions, section 4, Technical Data).
Many of these error messages are signs of faults in the supply grid and are therefore not malfunctions of the Powador inverter. The thresholds are specified by applicable standards (e.g. VDE0126-1-1) and the inverter must switch off if the permitted values are exceeded.

Independent display during operation

Display	Explanation
Self-test in progress	The system checks whether the grid cut-off relays are functioning correctly.

Table 4.3: **Display**

5 Troubleshooting

In line with our constantly growing quality assurance system, we strive to eliminate all faults. You have received a product which left us in perfect condition. Extensive tests to inspect the operating behaviour and protective equipment, as well as an endurance test, have been successfully carried out on each individual unit.
If your PV system does not work properly in spite of this, we recommend the following procedures for quick troubleshooting:
First of all, check that the Powador's solar generator connection and grid connection are correct. The safety information in this handbook must be fully observed in doing so. Carefully monitor the inverter and if necessary, make a note of the displays and LEDs.
The following faults may occur. They should be dealt with as described below.

Fault	Cause of fault	Repair/explanation
The inverter is displaying an impossible daily peak value	Faults on the grid voltage	The inverter continues to function as normal without reducing yield even if the system displays an incorrect daily peak value. The value is reset over night. To reset immediately, the inverter must be switched off and on again by disconnecting from the grid.
Daily yields do not correspond to the yields of the operator's grid-feeding meter	Tolerances of the measuring sensors in the inverter	The tolerances of the measuring sensors cause an error in measurement. See the operating instructions for the tolerances of the individual measured values. The daily energy yield can potentially deviate from the yield of the supply meter by up to 15 %, and by even more if insolation is low.
The grid fuse blows	– The grid fuse is insufficient – Damage to hardware of the inverter	When insolation is strong, the inverter can exceed its rated current for a short time, depending on the solar generator. For this reason, the inverter's pre-fuse should be set up to handle a larger current than the max. supply current. The grid fuse blows immediately when the inverter starts supplying power to the grid (once the start-up period has passed). In this case, there is damage to the hardware of the inverter. If this is the case, the unit must be repaired by KACO new energy GmbH.
The display is blank	– The unit is in night shutdown mode – There is no grid voltage – The solar generator voltage is less than 300 V	The inverter switches off over night. If the display does not light up during normal times of the day, you should check the supply meter to see if power is still being supplied to the grid. If power is being supplied to the grid, the display module is defective. The inverter must be repaired by KACO new energy GmbH. If power is not being supplied to the grid, you should check whether there is grid voltage and whether the solar generator voltage is greater than 300 V. If both of these are correct and the display is still blank, the unit must be repaired by KACO new energy GmbH.
The inverter is not starting, LED (1) is off	– The unit is in night shutdown mode – There is no grid voltage – The solar generator voltage is less than 410 V	The inverter switches off over night. The display and all three LEDs are off. If the inverter does not start during normal times of the day, check whether there is grid voltage and whether the solar generator voltage is greater than 410 V. If both of these are correct and the inverter still does not start up, the unit must be repaired by KACO new energy GmbH.
The inverter is activated but not supplying power to the grid. Message on the display: Start from 410 V measurement: xxx V	There is not enough generator voltage. The measured voltage is less than 410 V	The generator voltage or the generator power, which comes from the roof, may be too low to be able to supply power to the grid after sunrise, at dusk and when there is not enough solar radiation due to bad weather conditions. After switching off due to insufficient power, the inverter waits for a defined period of time (this setting is country-specific) before resuming its grid-feeding operation (see Installation Instructions, section 4, Technical Data).

The inverter is activated but not supplying power to the grid. The display shows: Start from 410 V measurement: xxx V (measured voltage is greater than 410 V)	The inverter stopped supplying power to the grid because of a fault	After an interruption due to a disturbance (grid disturbance, overtemperature, overload, etc.) the inverter also waits for a defined (country-specific) period of time before resuming its grid-feeding operation (see Instructions for skilled Electricians, Chapter 4, Technical Data). Interruptions can occur in faulty grids during the day. You should inform your solar installer if these interruptions accumulate over several weeks (more than 10 interruptions per day with error messages).
The inverter stops supplying power to the grid shortly after being turned on even though there is sufficient sun	Defective grid cut-off relay in the inverter	Although there is sufficient sun, the inverter only supplies power to the grid for a few seconds and then switches off. During the short supply, the inverter shows that between 0 and 5 W of power was supplied to the grid. In this case, we can rule out that the inverter is not getting sufficient generator power. Presumably, the grid cut-off relay is defective and the inverter can no longer switch on.
Inverter is noisy	Specific environmental conditions	Under specific environmental conditions, the units may make noises or noises may be audible. The following causes may be the decisive factor for it: – Grid interference or a problem with the grid caused by particular consumers (motors, machines, etc.) which are connected to the same point on the grid or within close proximity (neighbourhood) to each other. – During energetic weather (changeable between sunny and cloudy) or strong solar radiation, a slight hum can be heard due to high power. – Under certain grid conditions, there may be feedback between the input filter of the unit and the grid, which can still be heard even when the inverter is switched off. – For people with very sensitive hearing (particularly children), it is possible that the inverter's operating frequency of approx. 18 kHz is audible due to high-frequency buzzing. These type of noises do not effect inverter operation. Nor do they lead to loss of efficiency, failure, damage or a reduction in the service life of the units.

Table 5.1: **Troubleshooting**

Please inform your installer, if none of the measures discussed in these instructions help with troubleshooting.

In order for the factory customer service department to be able to react quickly and efficiently, some details are absolutely essential:

Details on the inverter

– Serial number of the unit
– Model
– Short description of the fault
– Is the fault repeatable? If yes, how?
– Does the fault occur intermittently?
– What are the insolation conditions?
– Time of day.

Details on the photovoltaic module

– Module type, manufacturer (include data sheet if available)
– Number of modules connected in series
– Number of strings
– Generator power.

6 Recycling and disposal

Both the inverter and its transport packaging are predominantly made of recyclable raw materials.

Unit

Defective inverters and accessories do not belong in household waste. Ensure the old unit and its accessories are disposed of appropriately.

Packaging

Ensure the transport packaging is disposed of appropriately.

For skilled and authorised electricians

Installation Instructions

Powador 6400xi / 6650xi / 7200xi / 8000xi

1 Installation Instructions 4
1.1 Provision and retention of the documents 4
1.2 Symbols used in this document 4
1.3 CE marking....4
1.4 Type label....4
2 Safety instructions and regulations 5
3 Notes concerning installation and operation....6
3.1 Intended use 6
3.2 Factory warranty and liability....6
3.3 Service 6
4 Technical data 7
5 Device description 11
5.1 Scope of delivery 11
5.2 Design of the PV generator....11
5.3 Protective concepts 12
6 Installation and startup....12
6.1 Selecting an appropriate place for installation 12
6.2 Installing the inverter....13
6.3 The electrical connection 13
6.4 DC isolator 17
6.5 DC string fuse 17
6.6 Connecting the fault signal relay....17
6.7 Connecting the S0 output....18
6.8 The RS485 interface 18
6.9 Limiting during asymmetric feed to the grid 18
6.10 The communications connection between the inverters....18
6.11 SYM bus test 19
6.12 The 6400xi / 6650xi / 7200xi / 8000xi and Powador-proLOG....19
6.13 Operating the 6400xi / 6650xi / 7200xi / 8000xi without the SYM bus function....19
6.14 Terminating 19
6.15 Display 19
6.16 Starting up the inverter....20
6.17 Programming the parameters - Parameter mode menu 20
7 Switching off the inverter....21
8 Powador as part of a PV installation 22
8.1 Design of installation....22
8.2 Installation with multiple inverters 24
9 Documents....25
9.1 EC Declaration of Conformity....25
9.2 Certificate of compliance (VDE)....26
9.3 Certificate of compliance (AS)....27

1 Installation Instructions

The following notes guide you through all of the documentation. Additional documents are applicable in conjunction with these operating and installation instructions.

We assume no liability for any damage caused by failure to follow these instructions.

Other applicable documents

When installing the inverter, be sure to observe all assembly and installation instructions for components and other parts of the system. These instructions are delivered together with the respective components and other parts of the system.

1.1 Provision and retention of the documents

Please pass these operating and installation instructions on to the plant operator. The plant operator retains the documents. The instructions must be available whenever they are needed.

1.2 Symbols used in this document

Observe the safety information provided in this installation manual when installing the inverter.

DANGER

Failure to observe a warning indicated in this manner will directly lead to serious bodily injury or death.

WARNING

Failure to observe a warning indicated in this manner may directly lead to serious bodily injury or death.

CAUTION

Failure to observe a warning indicated in this manner may lead to minor or moderate bodily injury or to serious damage to property.

ATTENTION

Failure to observe a warning indicated in this manner may lead to damage to property.

NOTE

Useful information and notes.

ACTION

This symbol indicates that a certain action is required.

IMPORTANT

Failure to observe this information may result in reduced convenience or impaired functionality.

1.3 CE marking

The CE marking is used to document that the Powador inverter indicated on the type label fulfills the fundamental requirements of the following relevant directives:

– Directive concerning electromagnetic compatibility (Council Directive 2004/108/EC)
– Low voltage directive (Council Directive 2006/95/EC).

1.4 Type label

The type label showing the exact designation of the unit is located on the support plate on the underside of the housing.



Danger due to lethal voltages.



Risk of fatal injury from fire or explosions.



Risk of burns from hot housing components.



Disconnect the inverter from all power sources

2 Safety instructions and regulations

DANGER

Danger due to lethal voltages.

Lethal voltages are present within the unit and on the power supply lines. Therefore, only skilled and authorised electricians may install and open the unit.

Even when the unit is switched off, high contact voltages may still be present inside the unit.

Standards and regulations

IEC 60364-7-712:2002:
Requirements for operating sites, areas and systems of a particular type – solar photovoltaic (PV) power supply systems.

Technical rules

Installation must be suited to the on-site conditions and comply with local regulations and technical rules.

Accident prevention regulations

The inverter must be installed by an authorised skilled electrician who is approved by the supply grid operator. The electrician is responsible for observing existing standards and regulations.

The proper and safe operation of this unit requires proper transportation, storage, assembly and installation, as well as careful operation and maintenance.

Only skilled electricians who have read and fully understood all safety information contained in these operating and installation instructions, as well as other instructions concerning assembly, operation and maintenance, may work on this unit.

When the unit is operating, certain parts of the unit unavoidably carry hazardous voltages, which can lead to death or severe injury. The precautions listed below should be followed to minimise the risk of death or injuries.

– The unit must be installed in compliance with safety regulations as well as all other relevant national or local regulations. To ensure operational safety, proper earthing, conductor dimensioning and appropriate protection against short circuiting must be provided.

– All covers on the unit must remain closed during operation.

– Prior to performing any visual inspections or maintenance, ensure that the power supply has been switched off and is prevented from being inadvertently switched back on. If measurements must be taken while the power supply is switched on, never touch the electrical connections. Remove all jewellery from your wrists and fingers. Ensure that the test equipment is in good and safe operating condition.

– Stand on an insulated surface when working on the unit while it is switched on, ensuring that there is no earthed connection.

– Follow the instructions contained in these operating and installation instructions exactly and observe all danger, warning and caution information.

– This list does not constitute a complete listing of all measures required for operating the unit safely. Contact your specialty dealer if any specific problems arise which are not sufficiently covered for the purposes of the buyer.

Modifications

Modifying the inverter is generally prohibited. Changes to the surroundings of the inverter are only permitted if they comply with national standards.

CAUTION

Risk of damage due to improper modifications. Never modify or manipulate the inverter or other components of the system.

Transport

The inverter is subjected to extensive testing and inspection in our test field. This is how we ensure the high quality of our products. Our inverters leave our factory in proper electrical and mechanical condition. Special packaging ensures that nothing can happen during transport. However, transport damage cannot be ruled out completely. The shipping company is responsible in this case.

Thoroughly inspect the inverter upon delivery. If you discover any damage to the packaging which indicates that the inverter may be damaged, or if you note any visible damage to the inverter, notify the responsible shipping company immediately.

If necessary, KACO new energy GmbH will assist you. Any report of damage must be received by the shipping company in writing within six days after receipt of the goods.

3 Notes concerning installation and operation

3.1 Intended use

The Powador inverter converts the DC power generated by the photovoltaic (PV) modules into AC power and feeds this into the power grid.
Powador inverters are built according to the state of the art and approved safety rules. However, improper use may cause lethal hazards for the operator or third parties or may damage the units and other property. The inverter may only be operated with a permanent connection to the public power grid. The inverter is not intended for mobile use.

Any other or additional use is not considered the intended use. The manufacturer/supplier is not liable for damage caused by such unintended use. Damage caused by such unintended use is at the sole risk of the operator.
"Intended use" also includes adherence to the operating and installation instructions. Some of the documents which you require in order to register your photovoltaic installation and have it approved are included with the installation instructions (Section 9).

3.2 Factory warranty and liability

KACO new energy GmbH grants a warranty of seven years on Powador inverters, starting from the date of installation, but at most 90 months after shipment by KACO new energy GmbH.

During this time, KACO new energy GmbH guarantees the proper function of the units and free-of-charge repair at the factory in the event of a defect for which we are responsible.

Contact your specialty dealer if your unit exhibits a defect or fault during the warranty period.

Warranty claims are excluded in the following cases:

- Use of the units in ways not intended
- Improper installation and installation that does not comply with standards
- Improper operation
- Operating the units with defective protective equipment
- Unauthorised modifications to the units or repair attempts
- Influence of foreign objects and force majeure (lightning, overvoltage, severe weather, fire)
- Insufficient ventilation of the unit
- Non-adherence to the relevant safety instructions
- Transport damage

All warranty claims must be handled at the premises of KACO new energy GmbH. To do this, the unit should be returned in its original or equivalent packaging. The costs for these services cannot be borne by KACO new energy GmbH.

KACO new energy GmbH will only perform warranty services when the faulty unit is returned to KACO new energy GmbH together with a copy of the invoice which was issued by the dealer to the user. The type label on the unit must be fully legible. If these requirements are not fulfilled, KACO new energy GmbH reserves the right to deny warranty services.

The warranty period for repairs or replacement shipments is six months after shipment. However, it continues at least until the end of the original warranty period for the shipped object.

3.3 Service

We have placed special emphasis on the quality and longevity of our inverters, beginning in the product development phase. More than 60 years of experience in the field of current inverters support us in this philosophy.

However, in spite of all quality assurance measures, faults may occur in rare cases. If this happens, KACO new energy GmbH will provide you with the maximum support possible. KACO new energy GmbH will make every effort to remedy such faults quickly and without a great deal of bureaucracy. Contact our service department directly.

Phone +49(0)7132-3818-660

4 Technical data

Input - Electrical data

Type	6400xi	6650xi	7200xi	8000xi
DC rated power	6650 W	6850 W	7480 W	8300 W
Max. PV generator output	7200 W	7500 W	8100 W	9000 W
MPP range	350-600 V			
No-load voltage	Up to 800 V			
Monitoring - input voltage	Stand-by from V_{IN} > 300 V Night shut-down from V_{IN} < 250 V			
DC voltage ripple	< 3 % eff			
Max. DC input current	19,0 A	19,7 A	21,4 A	24,0 A
Polarity safeguard	Short-circuit diode			
Overvoltage protection	Varistors and spark gaps			

Output - Electrical data

Type	6400xi	6650xi	7200xi	8000xi
Rated power	6400 W	6650 W	7200 W	8000 W
Maximum power	6400 W	6650 W	7200 W	8000 W
Grid voltage	See Chapter 4 – Technical Data – County-specific parameters - Page 9			
Rated current	27,8 A	28,9 A	31,3 A	35,0 A
Rated current	27,8 A	28,9 A	31,3 A	35,0 A
Power factor	≈1			
Frequency	See Chapter 4 – Technical Data – County-specific parameters - Page 9			
Distortion factor according to VDE0838 part 2 (EN61000-3-2)	<3 % at rated power <5 % over the entire range			
Fault signal relay	Potential-free NO contact (make contact), max. 30 V / 1 A			
S0 output	Open collector-output max. 30 V / 50 mA			

Inverter - Electrical data

Type	6400xi	6650xi	7200xi	8000xi
Max. degree of efficiency	96,5 %			
Euro. deg. of efficiency	95,8 %			
Internal consumption	Night shutdown: 0 W Operation: 11 W			
Minimum grid-feeding power	35 W			
Circuit design	Grid feed operational, transformerless			
Clock frequency	18 kHz			
Principle	Single-phase full bridge with IGBT technology			
Grid monitoring	Redundant 3-phase monitoring according to VDE0126-1-1			

Inverter - Mechanical and technical data

Type	6400xi	6650xi	7200xi	8000xi
Optical displays	PV generator (green) Fault (red)	AC power out (green) LCD (2 x 16 characters)		
Controls	2 keys for operating display			
Connections	PCB terminals inside the unit (AC connection) DC lead using spring-type terminals (through cable fittings) or plug connectors			
Ambient temperature	-20 °C ... +60 °C (>40 °C Power derating at high ambient temperatures)			
Temperature monitoring	Power regulation or cut-out through temperature monitoring in the semiconductor modules			
Cooling	Free convection (no fan)			
Protection class	IP54 according to EN 60529			
Noise emission	< 35 dB (noiseless)			
Housing	Aluminium wall-mounting housing			
Dimensions W x D x H	340 x 220 x 810 mm			
Weight	38 kg			

Country-specific parameter settings

Parameter → / Country ↓	Grid Voltage Range (in V)	Grid Voltage according to EN 50160 (in V)	Frequency range (in Hz)	Switch-On threshold (in seconds) On re-starting	Reconnection time (in seconds) after insufficient grid-feeding power	Reconnection time (in seconds) after a fault
Germany	190 ... 264	253 V	47,5-50,2	> 60	> 180	> 30
Spain	196 ... 254	-	49,0-51,0	> 180	> 180	> 180
Italy	190 ... 264	-	49,0-51,0	> 180	> 180	> 30
France	190 ... 264	253 V	47,5-51,0	> 60	> 180	> 30
Cyprus (GR)	208 ... 252	-	49,5-50,5	> 180	> 180	> 180
Greece	190 ... 264	-	47,5-52,0	> 180	> 180	> 180
China	190 ... 264	-	47,5-52,0	> 180	> 180	> 180
Australia	200 ... 264	-	44,0-55,0	> 60	> 60	> 60
Israel	200 ... 264	-	44,0-55,0	> 60	> 60	> 60
Korea	194 ... 242	-	59,7-60,3	> 360	> 360	> 360
Taiwan	194 ... 242	-	59,7-60,3	> 360	> 360	> 360

Reconnection times after restarting, after faults, or after insufficient grid-feeding power, are approximate values.

Country-specific grid connection table

Parameter → / Country ↓	L 1	L 2	L 3	N	PE	Note
Germany	X	X	X	X	X	With external conductor monitoring
Spain	X			X	X	
Italy	X			X	X	
France	X	X	X	X	X	
Cyprus (GR)	X			X	X	
Greece	X			X	X	
China	X			X	X	
Australia	X			X	X	
Israel	X			X	X	
Korea	X			X	X	
Taiwan	X			X	X	

Country-specific parameter menu

Parameter menu → / Country ↓	A	B
Germany	X	
Spain		X
Italy		X
France	X	
Cyprus (GR)		X
Greece		X
China		X
Australia		X
Israel		X
Korea		X
Taiwan		X

Parameter menu A

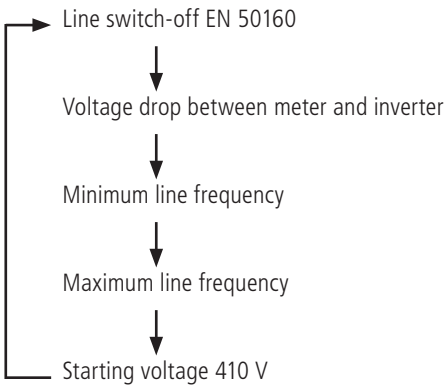

Parameter menu B

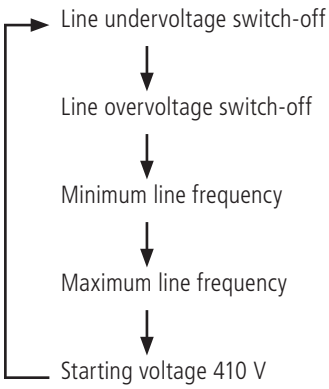

5 Device description

CAUTION

Incorrect use is prohibited.

The transformerless Powador xi - series units are currently available for eight differing power ratings. The appropriate inverter type is selected according to the maximum output of the photovoltaic modules that have been installed. The maximum outputs are found in the data sheet (section 4).
Your inverter's designation is shown above the display on the front side as well as on the type label.

5.1 Scope of delivery

- Powador
- Wall bracket
- Installation kit
- Documentation.

5.2 Design of the PV generator

The selection of the PV generator is of central importance when designing a PV installation. When doing so, you must be sure that the solar generator is also compatible with the inverter.
Observe the data provided in the data sheet (section 4) when dimensioning the solar generator.

NOTE

KACOCALC Pro, a dimensioning program for the easy selection of PV modules, can be downloaded at no cost at the following address:
http://www.kaco-newenergy.de

Dimensioning the PV generator:

The number of PV modules connected in series must be selected in such a way that the output voltage of the PV generator stays within the admissible input voltage range of the inverter – even during extreme outside temperatures. In Central Europe, module temperatures between -10 °C and +70 °C should be assumed. Depending on the way in which the modules are installed and the geographic location, +60 °C or +70 °C should be used when calculating the voltage. The temperature coefficients of the solar modules should be taken into account. The following criteria must be met for calculating the voltage of the PV generator:

- U_0 (-10 °C) < max. input voltage (800 V). Even at very low outside temperatures (-10 °C), the no-load voltage of the connected string must lie within the permitted input voltage range. If the temperature falls from +25 °C to -10 °C, the no-load voltage in 12 V modules increases by approx. 2.8 V per module (5.6 V for a 24 V module). The no-load voltage of the entire string must be less than 800 V.

- U_{Mpp} (+60 °C) > min. input voltage (350 V). Even at very high outside temperatures (+60 °C), the MPP voltage of the connected string should lie within the permitted input voltage range. If the temperature increases from +25 °C to +60 °C, the MPP voltage in 12 V modules increases by approx. 3.6 V per module (7.2 V for a 24 V module). The MPP voltage of the entire string must be at least 350 V.

If the MPP voltage moves outside of the permitted input range, the installation still functions properly. In this situation, the maximum possible amount of power is not fed into the grid; instead, a small amount less is fed.

Provided that the input voltage is within the admissible input voltage range, the inverter will not be damaged if a connected PC generator provides current that is above the max. usable input current.
If the PV generator should provide more than the max. PV generator power of the inverter for a short time (particularly at fairly low module temperatures and changing clouds), the inverter might switch off for safety reasons and switch on automatically after a defined (country-specific) period of time (see Section 4, Technical Data, country-specific parameters). The overload status is shown by a red LED and as plain text on the display. Under normal circumstances, the dynamic control of the inverter ensures that the inverter continues to operate without interruption.

The solar generator still represents the largest factor in the cost of a solar installation. For this reason, it is extremely important to obtain maximum energy yields from the solar generator. To achieve this, solar generators in Central Europe should be oriented to the south at an angle of 30°. They should never be shaded.

In many situations, this is not possible due to structural reasons. In order to achieve the same energy yield as an optimally oriented solar generator (south, 30° inclination), the solar generator power can be increased.
For roofs with an east-west orientation, we recommend a two-string PV installation. To achieve an optimum yield from the installation, the first string should be installed on the east side of the roof and the second string should be installed on the west side.

For exposed locations in mountains or in southern regions, we recommend that the power generator be reduced appropriately. Please consult with us or your specialty dealer about this.

5.3 Protective concepts

The following monitoring and protective functions are integrated into Powador inverters 6400xi / 6650xi / 7200xi / 8000xi:

- Redundant 3-phase grid monitoring for operator protection and to avoid islanding
- Overvoltage conductors/varistors to protect the power semiconductors from high-energy spikes on the grid side
- Temperature monitoring of the semiconductors
- EMC filters to protect the inverter against high-frequency grid interference
- AC/DC-sensitive residual current circuit breaker RCD type B switch (**R**esidual **C**urrent Protective **D**evice), which monitors the leakage current from the Powador's grid connection to the PV generator and disconnects the circuit when the residual current exceeds 30 mA
- The RCD type B switch triggers when a cable has a fault in the insulation, a frame fault or an earth fault
- DC circuit breaker for positively disconnecting the photovoltaic generator from the inverter
- DC fuses (10 A)

6 Installation and startup

WARNING

Risk of fatal injury from fire or explosions. The Powador's housing may become hot during operation.

Do not mount the Powador on flammable materials.

Do not install the Powador in areas which contain highly flammable materials.

Do not install the Powador in areas where there is a risk of explosion.

CAUTION

Risk of burns from hot housing components. Install the Powador so that unintentional contact with it is not possible.

6.1 Selecting an appropriate place for installation

NOTE

Powador inverters meet the requirements of protection class IP54 when all cable feedthroughs are used or suitably closed off.

The units should be installed in areas that are as dry as possible in order to extend their service life. In addition, be sure that the units are installed in climate-controlled areas to protect them from overheating, extending their service life in this manner, too.

- The following items are important when you select the place of installation for the inverter:
- Ensure good access to the unit for installation or any service work that may later be required.
- Maintain the following minimum clearances around the unit:

  200 mm side clearance to other units,
  700 mm clearance to other stacked units,
  500 mm to cabinets, ceilings, etc.

– The unit has been designed for vertical wall installation.
– Air must be allowed to circulate freely around the housing and through the heat sink on the rear side.
– If the inverter is built into a switching cabinet or similar, provide forced ventilation to insure that heat is dissipated adequately.
– The heat sink may reach a temperature of max. 90 °C. Therefore, mount the inverter only on walls made from heat-resistant material.
– Ensure that the wall has adequate load-bearing capacity and use appropriate installation material.
– In areas with a risk of flooding, be especially certain to install the inverter in a sufficiently elevated place.
– Installation at eye level makes it easier to read the display.

IMPORTANT

Due to the high system voltage, the current that flows on the DC side is lower than that flowing on the AC side. This means that, at identical cable cross-sections, losses on the AC-side lead are higher than those on the DC-side lead. For this reason and due to thermal factors, it makes sense to locate the inverter near the meter.

6.2 Installing the inverter

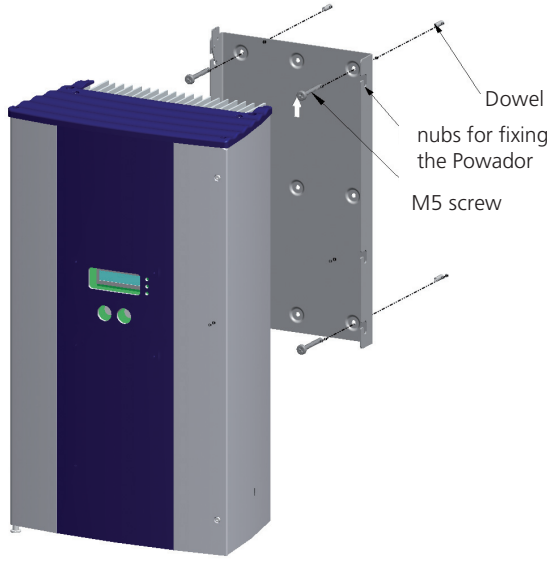

Figure 6.1: **Wall installation of Powador**

An installation kit consisting of four dowel and four 70 mm screws is shipped with the inverters. Check the composition of the wall before installation. If necessary, use an installation kit other than the one shipped with the inverter.

ACTION

– Drill the holes for the anchors at the selected installation position to match the cutouts in the mounting plate.
– Place the anchors into the holes.
– Use the screws to mount the mounting plate onto the wall at the selected position. When doing so, be sure that the arrow cut into the mounting plate points upwards.
– Mount the inverter on the mounting fixture so that the pegs in the heat sink rest in the notches.
– Lock the safety catch. To do this, slide the upper end of the safety catch toward the wall until the groove runs parallel to the wall (see Figure 6.2).

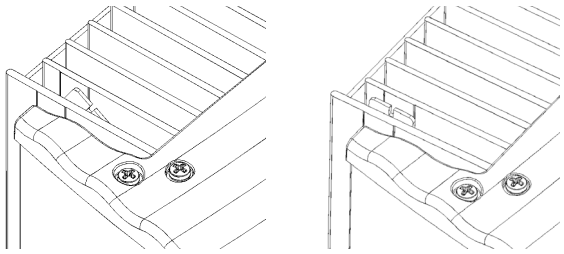

Figure 6.2: **Safety catch** open (left) and closed (right)

6.3 The electrical connection

General information

After the inverter has been installed in its fixed location, the electrical connection to the unit can be established.

DANGER

Only authorised trained specialists may install the Powador.

All mandatory safety regulations, currently applicable technical connection specifications of the electrical supply company responsible, and other general local regulations must be adhered to.

To connect the inverter, the AC and DC side must be disconnected from all power sources and secured against being inadvertently switched back on. The connection of the PV generator and the grid connection are established via PCB terminals in the connection box of the inverter (see Figure 6.3).

ACTION

The door of the housing must be opened to do this. The door is held shut with three Phillips recessed-head screws on the right side of the housing.

IMPORTANT

At the AC connection terminals, the maximum conductor cross-section that can be connected is 10 mm² for flexible conductors and 16 mm² for rigid conductors. Strip off 10 mm of insulation. Tighten the terminal with a torque of 1.2 to 1.5 Nm.

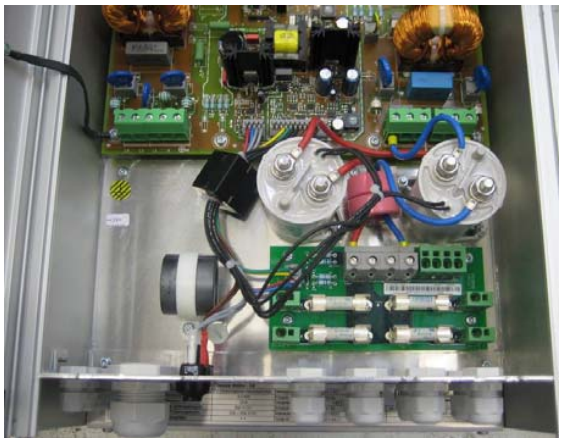

Figure 6.3: **Powador 6400xi / 6650xi / 7200xi / 8000xi connection box**

RCD Residual Current Device – RCD Type B

The inverter is provided with a universal RCD **R**esidual **C**urrent **D**evice. If there is an impermissible residual current, the inverter is disconnected from the grid. Because of this, an external residual current circuit breaker is not required.

Grid connection

The inverter feeds in single-phased at terminal L1. However, the grid connection is made using 5 conductors (L3, L2, L1, N, PE). There is an appropriate cable fitting on the underside of the housing for inserting the leads.

We recommend the following conductor cross-sections for cable lengths up to 20 m:
Powador 6400xi / 6650xi / 7200xi / 8000xi: 10.0 mm²
Larger cross sections should be used for longer leads.

We recommend the use of B40 automatic circuit breakers for 6400xi / 6650xi / 7200xi / 8000xi.

Power supply fuse

Fuse type:
Dimensions 5x20 mm, 250 V, 1.6 A time-lag, item no. 179200
Manufacturer: SIBA

The switching power supply of the 6400xi / 6650xi / 7200xi / 8000xi has an internal micro-fuse. This is labelled F1 on the PCB. Replace a defective fuse only with one of the same type. Failure to observe this may cause a hazard to health and to the unit.

DANGER

Disconnect the inverter from all power sources before replacing the fuse.

WARNING

Replace defective fuses only with fuses of the same type.
Non-adherence may cause health hazards and hazards to the device due to electric arcing.

NOTE

Be sure to use cables with a sufficiently large cross-section to avoid excessive line impedance between the domestic distribution and the respective Powador unit.

When the line impedance is high, i.e. long AC-side leads, the voltage at the grid terminals of the inverter will increase as power is being fed into the grid. The inverter measures this voltage. If the voltage across the grid terminals exceeds the grid overvoltage limit, the inverter will switch off because the voltage on the grid is too high. This condition must be taken into consideration while wiring the AC and when dimensioning the AC lead.

DANGER

Hazard of electric shock at live connections.
Check that the power lead is voltage-free before inserting it into the unit.

ACTION

Guide the lead, which has been stripped of its jacket and insulation, through the cable fitting.
Connect the lead, which has been stripped of its jacket and insulation, as is shown on the label on the left side of the PCB terminal.

CAUTION

Check that the leads are properly connected. Exchanging L and N will destroy the inverter.

ACTION

Once again, check that all connected leads are firmly connected.
Tighten the cable seal of the cable fitting.

PV generator connection

The PV generator leads are connected directly to the spring-type terminal on the fuse board in the connection box. The maximum cable cross-section that can be connected is 6 mm². As an option, the connection can also be established using plug connections in the unit's base plate.

DANGER

To ensure maximum protection from hazardous contact voltages while assembling photovoltaic installations, both the positive and the negative leads must be strictly isolated electrically from the earth potential (PE).

ATTENTION

Risk of damage.
Never reverse the polarity when connecting the unit.

ACTION

Before connecting the PV generator to the Powador, check that the PV generator is not earthed.

– Measure the DC voltage between protective earth (PE) and the positive lead and the protective earth (PE) and the negative lead of the PV generator. **If stable voltages can be measured, there is an earth fault in the PV generator or its wiring. The ratio between the measured voltages gives a clue as to the location of this fault. This fault must be remedied before taking any further measurements!**
– Measure the electrical resistance using a tester (an insulation resistance meter) between the protective earth (PE) and the positive lead and the protective earth (PE) and the negative lead of the PV generator. **Low resistance (< 2 MΩ) indicates a high-ohm ground fault of the PV generator, which must be fixed before further installation!**

CAUTION

The voltage of the solar generator must be measured before connecting the DC leads to the inverter terminals. The DC voltage must not exceed 800 V. Connecting to a higher voltage will destroy the unit.

The PV generator can be connected in the following ways:
– Spring-type terminals (through cable fittings)
– Tyco plug connectors
– MC plug connectors.

The cable fittings are installed upon delivery. As an option, Tyco and MC plug connectors can be enclosed with the inverter.

Connect the PV generator connection using cable fittings.

ATTENTION

To achieve protection class IP54, any unused cable fittings must be closed off by using the included blind caps!

ACTION

To do this, unscrew the cable fittings until you can insert the cable through the fitting. Then, connect the stripped ends of the cables to the corresponding spring-type terminals.

The four-pole terminal block for connecting PV- is labelled "-".
The single-pole terminals for PV+ are each labelled "+". Be sure that the polarity is correct when you make the connection. Finally, tighten the fittings to provide strain relief.

Connect the PV generator connection using Multi-Contact or Tyco plug connectors.

As an option, MC or Tyco plug connectors can be enclosed with the inverter. These can be used instead of the cable fittings which are installed in the delivery. This means, the cable fittings must be removed first and then the relevant plug connectors are installed.

WARNING

Always disconnect the inverter from the PV generator by operating the DC isolator before pulling the plug connector. Failure to observe this may cause arcing which results in a hazard to health and to the unit.

The assembly of the Tyco and MC connectors is shown in Figure 6.4 and Figure 6.5.



Figure 6.4: **Assembly of the Tyco plug connectors**

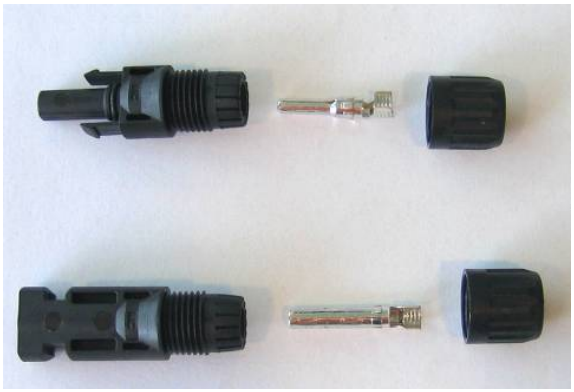

Figure 6.5: **Assembly of the MC plug connectors**

ATTENTION

Safety notice for MC4 cable couplings:
The various solar leads that are used around the world have different characteristics with regard to material, rigidity and diameter. This means that the same level of resistance to leaks is not ensured when combined with MC couplings. Because of this, MC recommends that those who assemble the cables be sure to check the cable fittings for leaks, and that they tighten the cable fittings with increased torque, if necessary. If this is not done, freedom from leaks, which is required for the safety of the final product, may not be achieved.
The MA231 assembly instructions have been changed (new beginning at index i) and are available on the MC website (www.multi-contact.com). Beginning im-mediately, use only this version.
The following always applies:
The tightening torque must be matched to the solar leads that are actually used.
Typical values range from 2.5 Nm to 3 Nm.

External string collector

When an external string collector is used, two plug connectors must be replaced with suitable plastic fittings on the units with plug connections. The PV generator connection leads of the string collector are fed through these into the inverter. Connect these two leads to the terminals labelled PV+ and PV- on the fuse board (see Figure 6.6).

ATTENTION

Risk of damage.
Never reverse the polarity when connecting the unit.

IMPORTANT

The internal DC fuses in the Powador 6400xi / 6650xi / 7200xi / 8000xi do not function in this situation. Provide an external string fuse.



Figure 6.6: **Connection terminal for external string collector**

6.4 DC isolator

The inverter has an internal DC isolator that disconnects the inverter from the photovoltaic generator if there is a fault. There is a toggle switch on the underside of the 6400xi / 6650xi / 7200xi / 8000xi so that this function can also be used manually. This can also be used to manually switch off this isolator.

IMPORTANT

In normal operating mode, the switch must be switched on. If not, power cannot be fed into the grid.



Figure 6.7: **Toggle switch on the underside of the unit**

6.5 DC string fuse

Fuse type: Size: 10 x 38 mm, PV fuse DC 900 V, 10 A,
Item no. 5021506, Manufacturer: SIBA

The Powador 6400xi / 6650xi / 7200xi / 8000xi has four integrated string fuses to protect your module from over-currents if faults occur. Each of these is designed for a 10 A current. These values can be used with the majority of commercially available modules.
If the module's manufacturer specifies a different type of fuse, replace the standard fuse with the one specified. As an option, fuses with 8 A and 12 A can be ordered from KACO.

DANGER

Disconnect the inverter from all power sources before replacing the fuse.

WARNING

- **Replace defective fuses only with fuses of the same type.**
- **Always insert 4 fuses of the same type.**

Non-adherence may cause health hazards and hazards to the device due to electric arcing.

6.6 Connecting the fault signal relay

The solar inverter is equipped with a potential-isolated relay contact to signal faults. This contact closes if a fault occurs. Maximum contact load: 30 V / 1 A.

IMPORTANT

In the event of a power failure on the public grid, the relay will not trigger. If this happens, all LEDs and the display go out. The inverter is shut down completely. A fault signal cannot be sent.



Figure 6.8: **Connecting the fault signal relay**

6.7 Connecting the S0 output

The inverter is equipped with an S0 pulse output. Items such as a large display can be connected to it. The pulse rate is adjustable (see Operating instructions).

6.8 The RS485 interface

Powador inverters are equipped with an RS485 interface (see Figure 6.9) to enable remote monitoring of your photovoltaic installation. Several inverters can be monitored over this interface at the same time. Using the Powador-proLOG series, you can receive your yield and operating data or error messages by SMS (text message) or e-mail. This monitoring option is especially recommended for situations where you are unable to check the functionality of your installation on-site at regular intervals, i.e. if your domicile is too far away from the installation site. In addition, you can use the Powador link within your installation to bridge long distances between several inverters or between an inverter and the Powador-proLOG by means of a wireless RF connection. Contact your installer if you wish to integrate remote monitoring into your system.

6.9 Limiting during asymmetric feed to the grid

Basic information

In order to limit the asymmetry between the phases while feeding into the grid to the max. permitted 4.6 kW (according to VDEW guidelines for connection and parallel operation of in-plant generation on the low-voltage grid, 4th edition 2001), Powador units 6400xi / 6650xi / 7200xi / 8000xi are equipped with an additional communication processor. The processor determines the power that is currently being fed into the grid from the connected inverters in its group. From this, it calculates the maximum permitted grid-feed power (taking the 4.6 kW mentioned above into account) and reports this value as the upper limit of grid-feed to the affected inverters.

6.10 The communications connection between the inverters

The Powador 6400xi / 6650xi / 7200xi / 8000xi series units are designed to be used in groups consisting of 3 inverters each. If not, the VDEW guidelines mentioned above would be violated. The inverters are distributed over all three phases for this. In addition, a communications connection must established between the inverters in the group. This is described below.

Each group requires just one master inverter.
To do this, select one inverter, and remove the jumper labelled Slave from it (see Figure 6.9).

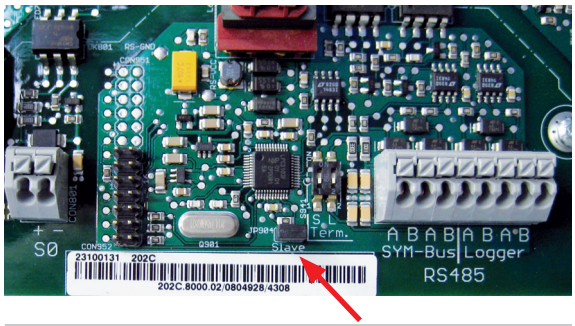

Figure 6.9: **RS485 interface and slave jumper**

It is helpful to mark this inverter uniquely (see below).

In order for the master inverter to communicate with the others, all three inverters must be connected via the RS485 interface that is labelled "Sym".
To do this, the "A" terminals of the Sym block of all three 6400xi / 6650xi / 7200xi / 8000xi in the group should be connected to each other. The "B" terminals should be connected in the same manner (see figure 6.9). This requires a twisted and shielded data cable.
The three inverters must be distinguishable from each other in order to communicate with them. To do this, they must be assigned a unique address in the range from 1 to 32. For example, if the installation consists of just three inverters, the master inverter could be assigned the address "1" and the two others could be assigned "2" and "3", respectively.

ATTENTION

The addresses that are used must be unique throughout the entire system. For example, if the complete system consist of more than three 6400xi / 6650xi / 7200xi / 8000xi inverters, each joined into groups of threes, the first group could be given addresses 1, 2 and 3, the second group could be given addresses 4, 5 and 6, etc.
Each inverter's address can be specified using the "Set" menu (see operator in-structions, section 4.5).

As the final step, the SYM bus must be switched to active in the menu. This must be done for all three inverters in a group. As delivered, the SYM bus is deactivated. The group is now set up.

6.11 SYM bus test

The Powador 6400xi / 6650xi / 7200xi / 8000xi has an integrated SYM bus test to test the wiring and the software settings of the three inverters that are connected together. This can only be activated if the SYM bus itself is activated. To do this, use button "2" to select "yes" in the "SYM bus active" menu of all units.

In order to begin the SYM bus test, use button "2" to select "yes" in the "SYM bus test active" menu on one inverter. Then, the display shows the current inverter address, and LED (1) begins to flash on all inverters that are connected into a group of three.

NOTE

The SYM bus test may require up to 30 seconds to start automatically on the connected inverters.

It is possible to read the status of the SYM bus as well as the addresses of the unit using the display screen. They can be changed as well. If some of the units connected into a group of three do not begin to flash, there is a problem in the wiring or the setup. If this happens, check the settings and the connections between the units.

In order to end the SYM bus test, use button "2" to select "no" in the SYM bus test menu. If you do not press any button for 2 minutes, the inverter automatically ends the test and returns to the most recent display.

6.12 The 6400xi / 6650xi / 7200xi / 8000xi and Powador-proLOG

We would like to mention once again that all addresses in the entire system must be unique and cannot be assigned multiple times. This does not change even when groups of three 6400xi / 6650xi / 7200xi / 8000xi are formed. The data loggers continue to consider the individual 6400xi / 6650xi / 7200xi / 8000xi independent units; thus, they require individual addresses.

However, there is an exception when the 6400xi / 6650xi / 7200xi / 8000xi groups are connected to the Powador-proLOG: The Powador-proLOG is connected only to the master inverter of a group, namely with the RS485 interface labelled Logger (see Figure 6.9). The master inverter in a group reports the data of all three units to the Powador-proLOG. Thus, in regard to configuration, etc., no changes need to be made for the Powador-proLOG.

6.13 Operating the 6400xi / 6650xi / 7200xi / 8000xi without the SYM bus function

If operation using the SYM bus function is not required, it can be deactivated. In this case, the units feed into the AC grid independently of each other. Monitoring for asymmetry no longer occurs. The units are connected to each other via the SYM bus interface. The Powador-proLOG is likewise connected to the SYM bus interface. The SLAVE jumpers must all be inserted, and the SYM bus function must be deactivated in the inverter menu.

NOTE

In Germany, because the asymmetry between the phases can only be a maximum of 4.6 kW, the SYM bus must be activated. The combination of two 5000xi and one 8000xi, for example, is an exception.

6.14 Terminating

For proper signal transmission, the last inverter in a chain must have a terminating resistor. This terminating resistor is already integrated into the control card and can be activated and deactivated using DIP switch S941. DIP switch 1 (label S) is used to terminate the SYM bus, and switch 2 (label L) is used to terminate the logger bus. As delivered, both switches are activated.

6.15 Display

Inverters in the Powador xi-series have a back-lit LCD, which shows measured values and data.
In normal mode, the backlighting is switched off. As soon as you press one of the keys, the backlighting is activated. If approx. 1 minute elapses without a key being pressed, it switches off.

IMPORTANT

Due to measuring tolerances, the measured values may not always correspond to the actual values. The measuring sensors of the inverter have been selected to ensure maximum solar yields.
Due to these tolerances, the daily yields displayed on the inverter may deviate from the values of your supply grid operator's grid-feeding meter by up to 15 %.

6.16 Starting up the inverter

After completing the mechanical and electrical installation, the inverter is put into operation as follows.

NOTE

The inverter can only be put into operation under daylight conditions (i.e. at a solar generator voltage of > 300 V). If no daylight or solar generator voltage is present, the inverter can be activated by pressing the Start key (see Operating instructions), but normal operation is not be possible in this condition. Only the values can be read off the display.

ACTION

– Switch on the grid voltage (via the external circuit breakers).
– Switch on the solar generator via the DC circuit breaker (0 → 1).

The uppermost green LED (1) lights up if the generator voltage is greater than 300 V. The display now shows the inverter type for 4 seconds, followed by the current generator voltage: "Start from 410 V measurement: xxx V". If the measured voltage is higher than 410 V, the device will start its grid-feeding operation after the end of a defined (country-specific) period of time. (See Chapter 4, Technical Data, country-specific parameters).
This start-up period is required to ensure that the generator voltage is continuously above the power delivery limit of 410 V. An immediate start routine is provided for startup and test purposes – this routine circumvents the start-up period. The immediate start routine is found in the set-up mode menu (see Operating instructions).

During the startup procedure, the line power relay audibly switches on and power delivery starts. This is signalled by the green LED (2). The display now shows the power being fed to the grid. The "1" key can be used to display the various measured values (see Operating instructions).

After interrupting its grid-feeding operation due to insufficient power, the inverter waits for a defined (country-specific) period of time before resuming its grid-feeding again (see Section 4, Technical Data, country-specific parameters).

Immediate start

When your installation is being accepted by your power supply company or for testing, the inverter can also be starting without any waiting period.

ACTION

To do this, switch to "Set" mode menu by pressing both keys at the same time. Press the "1" key to move through the menu until you have reached the "Quickstart" menu item.
When you reach this menu item, keep the "2" key pressed for a short time until the inverter switches on (relay switches audibly) and the green grid-feeding LED (2) lights up. If the solar generator voltage is too low, the inverter switches off again.

6.17 Programming the parameters - Parameter mode menu

Various operating mode parameters can be set in the programming mode menu of Powador xi units.

WARNING

Incorrect parameter settings will lead to a loss of functions. In addition, incorrect parameter settings will render your Declaration of Conformity invalid, and all the safety functions will be lost. Changes may only be made in exceptional situations, and then only after consulting with the manufacturer and the power supply company.

In order to change to the parameter mode menu, hold the "2" key down for 15 seconds until the display changes to displaying the first parameter.
Use the "1" key to scroll through the various menu items. The menu is continuous. When you reach the end, the display automatically jumps back to the first item.

ACTION

Use the "2" key to change the parameter shown. When doing so, the value increases or decreases, depending on the parameter. The values here are continuous as well: i.e. after you reach the maximum value they jump back to the minimum value.

Parameter menus A and B are located in Section 4, "Technical Data".

Explanation of individual parameters:

Parameter menu A:

– End grid feed according to EN50160: The line voltage is averaged over 10 minutes. If the set value is exceeded, the inverter is disconnected from the grid. The voltage threshold can be set at 244 V or 253 V under "End grid feed according to EN50160".

– "Undervoltage between inverter and meter", adjust threshold incrementally in 1 V steps between 0 V and 11 V. This voltage drop between the inverter and the grid-feed meter is added to the limit value of "End grid feed according to EN5016". This means, at a grid voltage of 253 V and a voltage drop of 5 V, the Powador inverter will switch off, if the average grid voltage is greater than 258 V for ten minutes.

– Minimum and maximum line frequency: The grid frequency is also monitored. If it falls below the value set in "Minimum line frequency" or exceeds the value set in "Maximum line frequency", the inverter switches off. Both limit values can be set in 0.1 Hz increments (see Chapter 4, Technical Data, country-specific parameters).

– Minimum PV generator voltage to feed grid: After sunrise, the inverter begins to feed the grid once the voltage has reached 410 V (display: "Start from 410 V"). This setting enables safe operation in any solar generator configuration. In exceptional cases it may be necessary to adjust this starting voltage threshold. At a low generator voltage (few modules connected in series), the starting voltage may be reduced to ensure safe start even under unfavourable weather conditions. At a high generator voltage, the starting voltage may be increased to ensure that the inverter does not switch itself on and off too often with low power. The starting voltage may be set within a range from 370 V to 500 V in increments of 10 V (factory setting: 410 V).

Parameter menu B:

– Line undervoltage switch-off: The inverter is equipped with redundant 3-phase monitoring. If the line voltage falls below the value set in "Minimum line voltage", the inverter switches off. The minimum switch-off threshold can be set in 2 V increments.

– Line overvoltage switch-off: If the line voltage exceeds the value set in "Maximum line voltage", the inverter switches off. The maximum switch-off threshold can be set in 2 V increments.

– Minimum and maximum line frequency: The line frequency is also monitored. If the line frequency falls below the value set in "Minimum line frequency" or exceeds the value set in "Maximum line frequency", the inverter switches off. Both limit values can be set in 0.1 Hz increments.

– Starting voltage for grid feeding: See above.

ACTION

After the parameters have been changed, you must exit out of the parameter mode so that the settings are permanently saved in the inverter.
To return to previous menu press both buttons until the message "programming is saved" is shown. This display changes back to the "normal" display after 4 seconds.
The parameter settings are now saved. Even if you do not press the "1" or "2" key, the set mode menu is automatically exited after 2 minutes and the parameters are saved.

7 Switching off the inverter

The inverter must be switched off to adjust settings and for maintenance and repair work. This is done as follows:

DANGER

Risk of fatal injury by electric shock at live connections. Lethal voltages are still present in the inverter even after the electrical connections have been disconnected.
Wait 30 minutes before reaching into the inverter.
When working on the photovoltaic modules, you must always disconnect the DC disconnector at all poles in addition to disconnecting from the grid.
Disconnecting the grid voltage is not enough.

ACTION

– Disconnect the grid voltage (switch off the external safety breakers).
– Disconnect the photovoltaic module using the DC disconnector.
– Check to be sure that the grid connection terminals and the DC connection terminals of the inverter are free from all voltage sources.

8 Powador as part of a PV installation

8.1 Design of installation

A sample design of a PV installation connected to the grid, using Powador inverters, is shown in the overview circuit diagrams which follow.

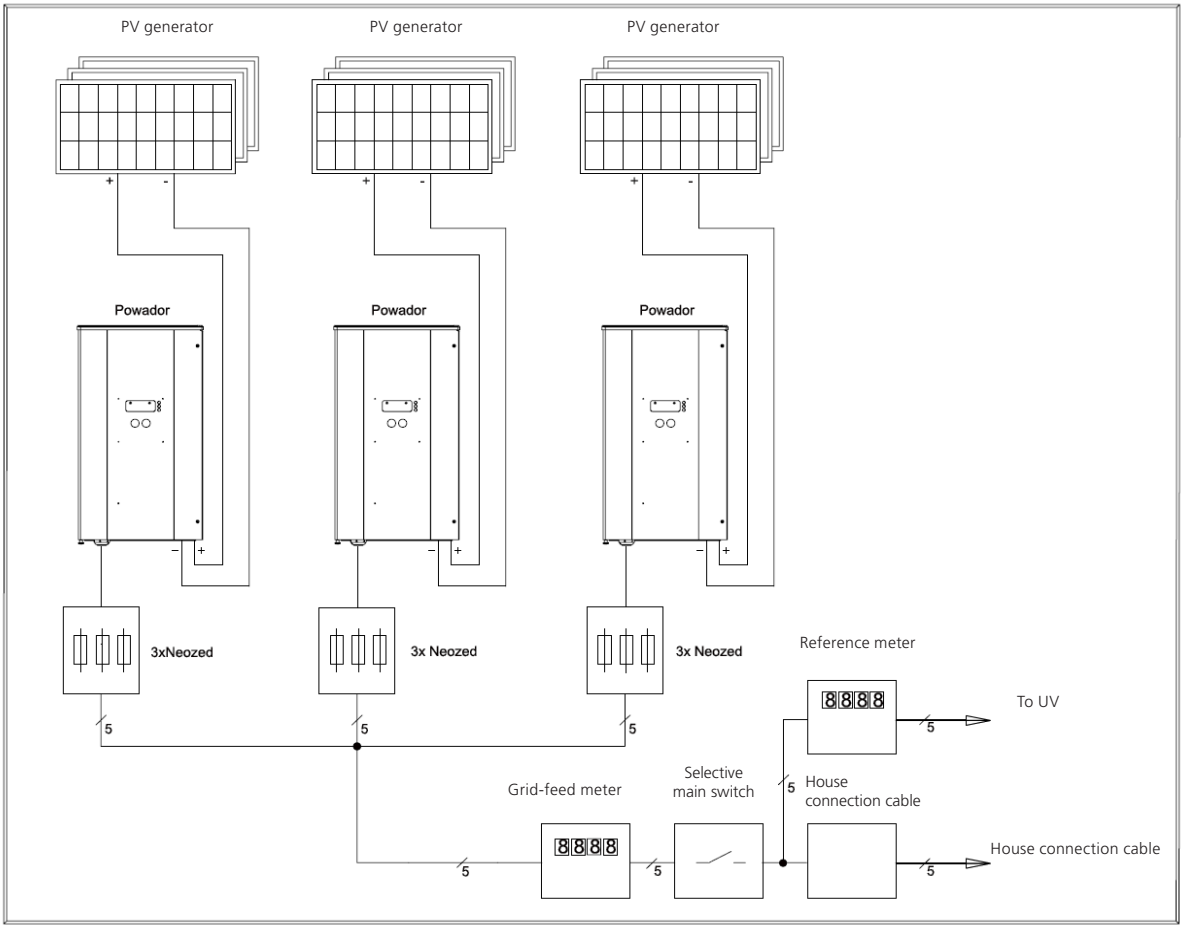

Figure 8.1: **Single-pole overview circuit diagram for an installation using three Powador 6400xi / 6650xi / 7200xi / 8000xi units**

A summary of the components:

DC terminal point:

Multiple generator strings are connected in parallel either at a DC terminal point between the solar generator and the inverter or directly on the inverter (there are either cable fittings or plug connectors for 4 strings with the associated string fuses on the inverter). Of course, you can also connect the strings directly to the solar generator and then run just one negative and one positive lead to the inverter. In this case, the DC lead must be connected directly to the screw terminals on the fuse board (see sec. 6.3: External string collector).

Grid fuses:

A B40 automatic circuit breaker is to be used with the Powador 6400xi / 6650xi / 7200xi / 8000xi for grid-side fusing. We recommend a conductor cross-section of 10 mm² for cable lengths up to 20 m. Larger cross sections should be used for longer leads.

Grid-feed meter:

The required grid-feed meter is specified and installed by the responsible power supply company. Some power supply companies also allow the installation of your own, calibrated meter. In this case, you do not need to pay rent for the meter, but the power supply company may require that the meter be officially calibrated periodically.

Selective main switch:

As specified in the German TAB 2000, the main switch must be designed as a selective main switch according to E DIN VDE 0643: 2000-08 and E DIN VDE 0645: 2000-8. Contact your power supply company if you have questions concerning the required main switch.

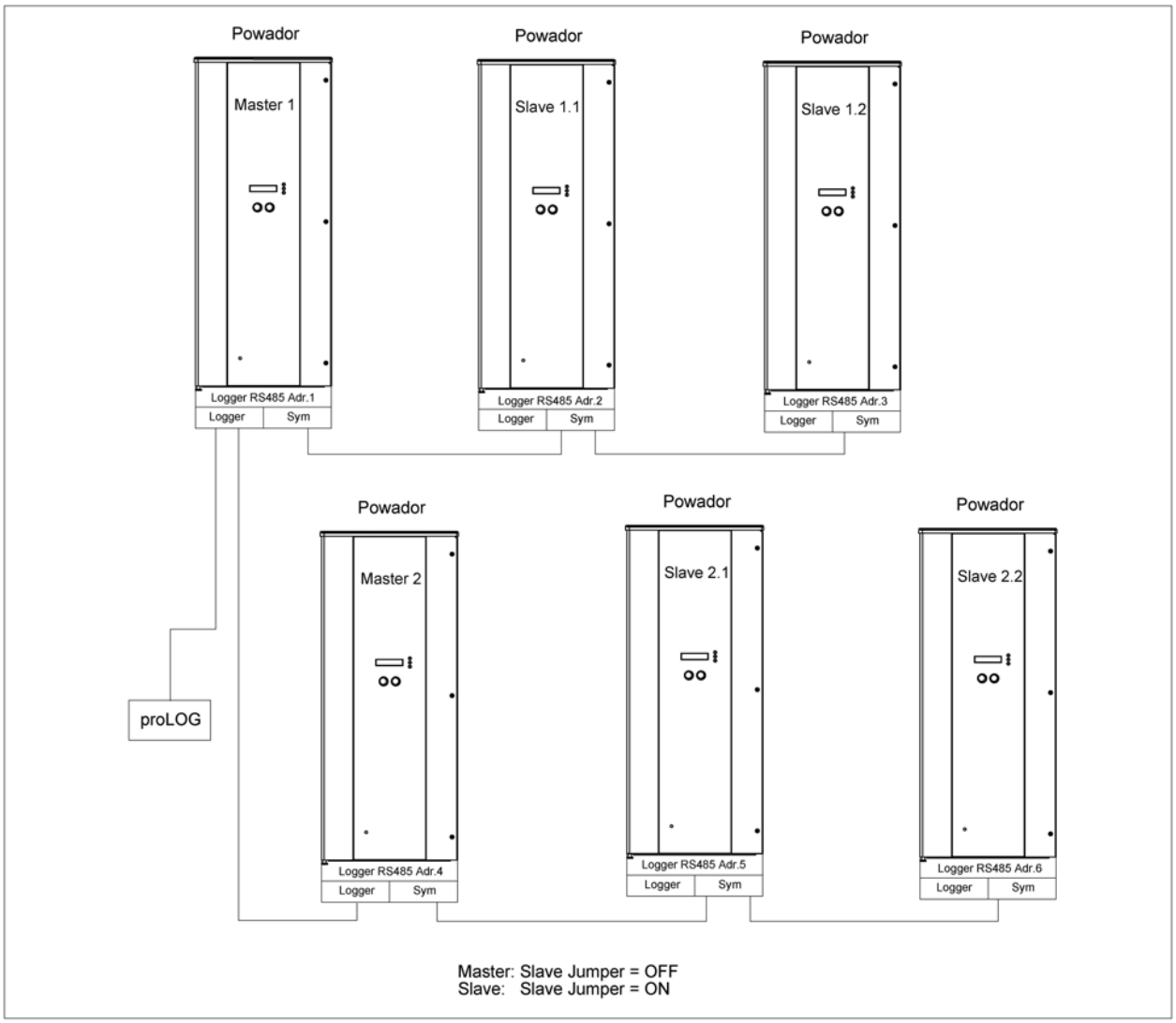

Figure 8.2: **Example of master/slave wiring: Powador 6400xi / 6650xi / 7200xi / 8000xi**

8.2 Installation with multiple inverters

Observe the following regarding installations with multiple inverters:

Asymmetric grid-feed:
The power should be distributed as equally as possible over all three phases. According to the VDEW guidelines concerning the connection and parallel operation of independent power generating plants on the low-voltage grid, 4th edition, 2001, the asymmetry between the phases may be a maximum of 4.6 kW.

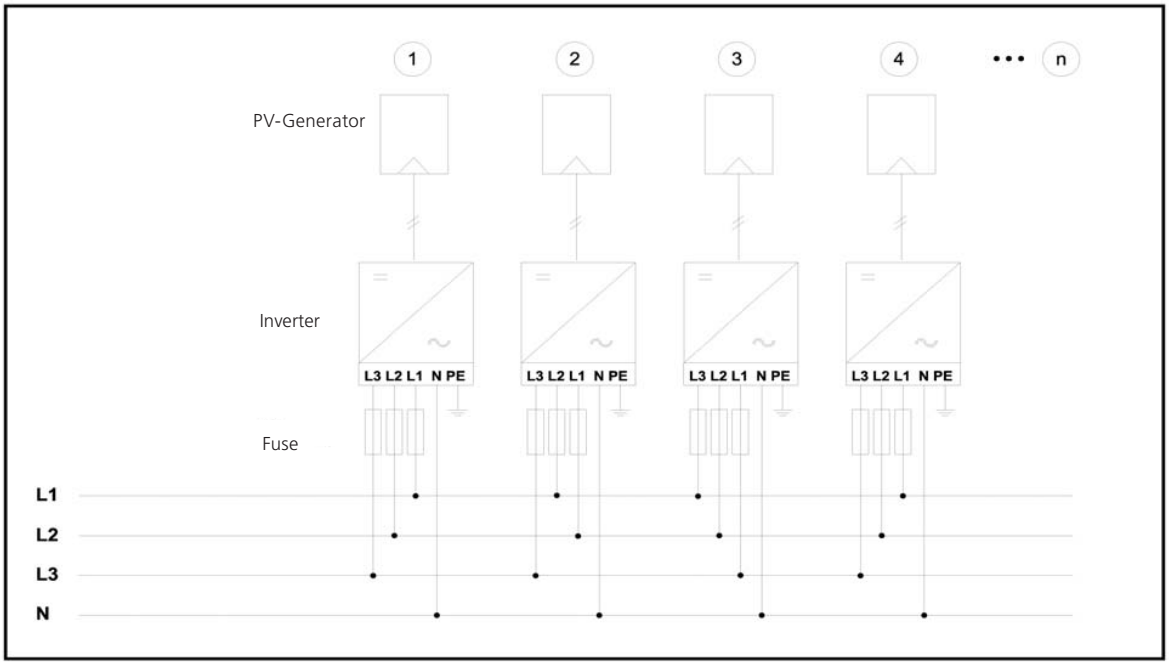

Figure 8.3: **Grid-side connection for installations with multiple inverters**

Electrical connection:
The Powador is equipped with 3-phase monitoring, but it only feeds in on one phase. In order to avoid asymmetries in the grid, installations with multiple inverters should be designed so that the inverters feed to the grid in different phases. The inverter feeds into the phase that is labelled L1 on the inverter's terminals.

If you have multiple inverters, connect the actual phase L1 to terminal L1 on the first unit. On the second unit, connect phase L2 to terminal L1. On the third unit, connect phase L3 to terminal L1. This distributes the power optimally.



Figure 8.4: **AC connection terminal**

Connection L1 feeds into the grid,
Connections L2 and L3 are only monitored.

9 Documents

9.1 EC Declaration of Conformity

Name and address of the manufacturer:	**KACO new energy GmbH** Carl-Zeiss-Str. 1 74172 Neckarsulm, Germany
Product description:	**Photovoltaic grid-tied inverter Powador**
Type description:	**Powador 6400xi / 6650xi / 7200xi / 8000xi**

This is to confirm that the devices stated above are compliant with the protection requirements set forth in the EU Council Directive as of 15 December 2004 for the Harmonization of Legal Stipulations of the Member States concerning Electromagnetic Compatibility (2004/108/EC) and the Low Voltage Directives (2006/95/EC).

The devices are compliant with the following standards:

2006/95/EC
"Directive concerning electrical equipment designed for use within certain voltage limits"

Safety of the device
EN 60950-1:2006
EN 50178:1997*
* regarding clearance and creepage distances

2004/108/EC
"Directive concerning electromagnetic compatibility"

Interference immunity:
EN 61000-6-1:2007
EN 61000-6-2:2005

Emitted interference:
EN 61000-6-3:2007
EN 61000-6-4:2007**
** regarding radiated emission

Secondary effects on the grid:
EN 61000-3-12:2005
EN 61000-3-11:2000

Therefore, the types stated above are labelled with the CE marking.

Any unauthorised modifications to the supplied devices and/or any use for other than for the intended purposes shall render this Declaration of Conformity null and void.

Neckarsulm, 01st February 2009
KACO new energy GmbH



ppa. Matthias Haag
Head of Grid-Coupled Systems Division

9.2 Certificate of compliance (VDE)

Bureau Veritas E&E
Product Services GmbH
Businesspark A96
86842 Türkheim
Germany
+ 49 (0) 8245 96810-0
cps-tuerkheim@de.bureauveritas.com

Certificate of compliance

Applicant: **Kaco new energy GmbH**
Gottfried-Leibniz-Str.1
74172 Neckarsulm
Germany

Product: **Automatic disconnection device between a generator and the public low-voltage grid**

Model: **Powador 8000xi, Powador 7200xi, Powador 6650xi, Powador 6400xi**

Use in accordance with regulations:

Automatic disconnection device with three-phase mains surveillance in accordance with DIN V VDE V 0126-1-1:2006-02 for photovoltaic systems with a single-phase parallel coupling via an inverter in the public mains supply. The automatic disconnection device is an integral part of the aforementioned inverter. This serves as a replacement for the disconnection device with insulating function which the distribution network provider can access at any time.

Applied rules and standards :

DIN V VDE V 0126-1-1 (VDE V 0126-1-1):2006-02 and „Generator at the public low-voltage grid, 4th edition 2001, guideline for connection and parallel operation of generators in the public low-voltage grid" with VDN additions (2005) from the German Electricity Association (VDEW) and Association of network operator (VDN).

The safety concept of an aforementioned representative product corresponds at the time of issue of this certificate of valid safety specifications for the specified use in accordance with regulations.

Report number: **07KFS110-VDE0126**
Certificate nummer: **U09-166**
Date of issue: **2009-08-14** **Valid until:** **2012-08-14**

Andreas Aufmuth

9.3 Certificate of compliance (AS)

Bureau Veritas E&E
Product Services GmbH
Businesspark A96
86842 Türkheim
Germany
+ 49 (0) 8245 96810-0
cps-tuerkheim@de.bureauveritas.com

Certificate of compliance

Applicant: **Kaco new energy GmbH**
Gottfried-Leibniz-Str.1
74172 Neckarsulm
Deutschland

Product: **Automatic disconnection device between a generator and the public low-voltage grid**

Model: **Powador 8000xi**

Use in accordance with regulations:

Automatic disconnection device with single-phase mains surveillance in accordance with AS 4777.2:2005 and AS 4777.3:2005 for photovoltaic systems with a single-phase parallel coupling via an inverter in the public mains supply. The automatic disconnection device is an integral part of the aforementioned inverter. This serves as a replacement for the disconnection device with isolating function which the distribution network provider can access at any time.

Applied rules and standards :

AS 4777.2:2005 Grid connection of energy systems via inverters, Part 2: Inverter requirements
AS 4777.3:2005 Grid connection of energy systems via inverters, Part 3: Grid protection requirements

The safety concept of an aforementioned representative product corresponds at the time of issue of this certificate of valid safety specifications for the specified use in accordance with regulations.

Report number: **07KFS110-AS4777**
Certificate nummer: **U09-175**
Date of issue: **2009-08-25** **Valid until:** **2012-08-25**

Andreas Aufmuth

Notice

31000669-03-100517

The text and figures reflect the current technical state at the time of printing. Subject to technical changes. Errors and omissions excepted.

KACO new energy.

Carl-Zeiss-Straße 1 · 74172 Neckarsulm · Germany · Phone +49 7132 3818-0 · Fax +49 7132 3818-703 · info@kaco-newenergy.de · www.kaco-newenergy.de