All manuals and user guides at all-guides.com

Grid-tie Transformerless Solar Inverter

RPI-M8/ M10/ M12/ M15/ M15A/ M20/ M20A/ M30



English.....1

简体中文.....70

繁體中文.....137

all-guides.com

All manuals and user guides at all-guides.com

Contents

Section Description Page

1. General Information....6
   - 1.1 About this Manual....6
   - 1.2 General Warnings / Notes on Safety....6
   - 1.3 Validity....7
   - 1.4 Product Description....7
   - 1.5 How it Works....8
   - 1.6 Additional Information....8
2. Installation and Wiring....9
   - 2.1 Instruction before Installation....9
   - 2.2 Unpacking....9
   - 2.3 Package Inspection....10
   - 2.4 Identify of Inverter....10
3. Product Overview....11
   - 3.1 Dimension....11
   - 3.2 Function Introduction....12
     - 3.2.1 LCD Display and Buttons....12
     - 3.2.2 Inverter Input / Output Interface....13
4. Installation....14
   - 4.1 Installing Location....14
   - 4.2 Mounting....14
5. Wiring....18
   - 5.1 Preparation before Wiring....18
   - 5.2 AC Grid Connection: 3-Phase+PE or 3-Phase+N+PE....20
     - 5.2.1 Required Protective Devices and Cable Cross-sections....20
   - 5.3 DC Connection (from PV Array)....24
   - 5.4 Communication Module Connections....26
     - 5.4.1 RS-485 Connection....26
     - 5.4.2 EPO Functions....28
     - 5.4.3 Dry Contact Connection....28
6. Active / Reactive Power Control and Fault Ride Through....29
   - 6.1 Active Power Control....29
     - 6.1.1 Power Limit....29
     - 6.1.2 Power vs. Frequency....30
   - 6.2 Reactive Power Control....31
     - 6.2.1 Fixed Active Factor cosφ....31

All manuals and user guides at all-guides.com

6.2.2 Active Factor cosφ(P) 31
6.2.3 Fixed Reactive Power 32
6.2.4 Reactive Power / Voltage Characteristic Q(U) 32
6.3 Fault Ride Through (FRT) 33
7. Turn on/off PV inverter 35
7.1 Home Page 37
7.2 LCD Flow Chart 37
7.2.1 Power Meter 37
7.2.2 Energy Log 38
7.2.3 Event Log 38
7.2.4 Operation Data 39
7.2.5 Inverter Information 39
7.2.6 Settings 40
7.2.6.1 Personal Setting 40
7.2.6.2 Coefficient Setting 41
7.2.6.3 Installation Settings 41
7.2.6.4 Active/Reactive Power Control 44
7.2.6.4.1 Power Limit 45
7.2.6.4.2 Power vs. Frequency 45
7.2.6.4.3 Constant cosφ 46
7.2.6.4.4 cosφ(P) 46
7.2.6.4.5 Constant Reactive Power 47
7.2.6.4.6 Q(U) 47
7.2.6.5 FRT (Fault ride through) 48
8. Maintenance 49
8.1 Clean Fan 49
8.2 Replace Fan 50
8.3 Clean Air Outlets 50
9. Measurement, Error message and Trouble Shooting 51
9.1 Measurement 51
9.2 Error Message & Trouble Shooting 54
10. De-Commissioning 60
10.1 De-Commissioning Procedure 60
11. Technical Data 61
11.1 Specification 61

All manuals and user guides at all-guides.com

Figure

Section Description Page

Figure 1-1 Solar system operation illustration 8
Figure 2-1 Unpacking process 9
Figure 2-2 Wooden case unpacking process 9
Figure 2-3 The identification label 10
Figure 3-1 Dimension of RPI-M8/ M10/ M12/ M15A/ M20A 11
Figure 3-2 Dimension of RPI-M15/ M20/ M30 11
Figure 3-3 Inverter exterior objects 12
Figure 3-4 LCD display and control panel 12
Figure 3-5 Input/Output interfaces of M8/ M10/ M12/ M15A/ M20A 13
Figure 3-6 Input/Output interfaces of M15/ M20/ M30 13
Figure 3-7 Air outlet illustration 13
Figure 4-1 Screw the mounting bracket 15
Figure 4-2 Correct and incorrect installation illustration 16
Figure 4-3 Proper installation gap 17
Figure 5-1 Connection of a system for floating DC inputs 18
Figure 5-2 Connection of system with positive/negative ground 19
Figure 5-3 Stripping the wire 21
Figure 5-4 AC plug illustrationfor M8/ M10/ M12/ M15/ M15A/ M20/ M20A. .22
Figure 5-5 AC plug illustration for M30 23
Figure 5-6 DC Wiring illustration 25
Figure 5-7 Communication module 26
Figure 5-8 Multi-inverter connection illustration 27
Figure 5-9 Dry contact port & Assignments 28
Figure 6-1 Power vs. frequency characteristic 30
Figure 6-2 cosφ(P) characteristic 31
Figure 6-3 Q(U) characteristic. 32
Figure 6-4 Borderlines of the voltage profile of a type-2 generating plant at the network connection point 34
Figure 6-5 FRT characteristic 34
Figure 7-1 LCD display &control panel 35
Figure 7-2 Select county page 36
Figure 7-3 Select language page 36
Figure 7-4 Home page 37
Figure 7-5 Menu page 37

All manuals and user guides at all-guides.com

Figure 7-6 Power meter page 37
Figure 7-7 Energy log flow chart 38
Figure 7-8 Event log flow chart 38
Figure 7-9 Operation data flow chart.....39
Figure 7-10 Inverter information page.....39
Figure 7-11 Setting page.....40
Figure 7-12 Personal setting page.....40
Figure 7-13 Coefficient setting page 41
Figure 7-14 Install setting page –User mode 42
Figure 7-15 Insulation setting.....42
Figure 7-16 Install setting page – Installer mode 42
Figure 7-17 Grid setting page 43
Figure 7-18 Active/Reactive powersetting page.....44
Figure 7-19 Power limit setting page.....45
Figure 7-20 Power vs. frequency setting page.....45
Figure 7-21 Constant cosφ setting page.....46
Figure 7-22 cosφ(P) setting page 46
Figure 7-23 Constant Reactive Power setting page.....47
Figure 7-24 Q(U) setting page 47
Figure 7-25 FRT setting page 48
Figure 8-1 dissembling fan connections.....49
Figure 8-2 disassembling fan overview.....50
Figure 8-3 Disassembling fan 50
Figure 8-4 Disassembling air outlets.....50

All manuals and user guides at all-guides.com

Table

Section Description Page

Table 2-1 Packing list 10
Table 5-1 Recommended upstream protection 20
Table 5-2 Wire size of AC input 20
Table 5-3 The wiring system of the inverter. 23
Table 5-4 Maximum rating of input power 24
Table 5-5 Cable size 24
Table 5-6 Definition of RS 485 pin 26
Table 5-7 RS-485 data format 27
Tabel 5-8 Terminal resister setting 27
Tabel 5-9 EPO functions 28
Table 7-1 LED indicator 36
Table 7-2 Grid setting parameters 43
Table 9-1 Measurement and message 51
Table 9-2 Error Message 54
Table 9-3 Warning Message 55
Table 9-4 Fault Message 56
Table 11-1 Specification for RPI-M8/ M10/ M12 61
Table 11-2 Specification for RPI-M15/ M20/ M30 64
Table 11-3 Specification for RPI-M15A/ M20A 67

all-guides.com

All manuals and user guides at all-guides.com

1. General Information

1.1 About this Manual

Congratulations on the purchase of your Delta RPI-M8/ M10/ M12/ M15/ M15A/ M20/ M20A/ M30 grid-tied solar inverter. This manual will assist you in becoming familiar with this product. Please observe all safety regulations and take into account technical connection conditions required at your local grid utility.

1.2 General Warnings / Notes on Safety

Careful handling of the product will contribute to service life durability and reliability. Both are essential to ensure maximum yield from your product. As some of the solar inverter models are heavy, two people may be required for lifting purposes.



CAUTION！

During operation of electrical devices, certain parts are under dangerous voltage.

Inappropriate handling can lead to physical injury and material damage.

Always adhere to the installation regulations. Installation may only be conducted by certified electricians.



WARNING！

Repair work on the device should ONLY be carried out by the manufacturer. No user serviceable parts inside.

Please observe all points in the operation and installation manual.

Isolate the device from the grid and the PV modules before undertaking work on the device.



DANGER！

To avoid risk of electrical shock, do not open the solar inverter. The inverter contains no internal user-serviceable parts. Opening the inverter will void the warranty.

Dangerous voltage is present for 5 minutes after disconnecting all sources of power.

Remember that the unit has a high leakage current. The PE conductor MUST be connected prior to commencing operation.

All manuals and user guides at all-guides.com



WARNING：BURN HAZARD

The unit may reach very high temperatures and the device surface can become quite hot. Sufficient cooling time is necessary for optimal yield.

1.3 Validity

This user manual describes the installation process, maintenance, technical data and safety instructions of the following solar inverter models under the DELTA brand.

- ◆RPI-M8
- ◆ RPI-M10
- ◆ RPI-M12
- ◆RPI-M15
- ◆ RPI-M15A
- ◆ RPI-M20
- ◆RPI-M20A
- ◆ RPI-M30

1.4 Product Description

This device is a 3-phase grid-tied solar inverter. It converts direct current (DC) electricity from the PV array into 3-phase alternating current (AC) which feeds the excess generated power back to the local grid.

This inverter allows for a wide voltage range (200~1000V) and has a high performance efficiency and user friendly design and operation. Please note these devices do not support off-grid functionality.

The features for RPI-M8/ M10/ M12/ M15/ M15A/ M20/ M20A/ M30 are shown below.

Features

- ◆ Power Rating：8/ 10/ 12/ 15/ 20/ 30 kVA
- ◆ 3Phase, Grid-tie, Transformerless solar inverter
- ◆ Maximum efficiency：> 98 %
- ◆ Europe efficiency: >97.5%
- ◆ Reactive power capability (Cap 0.8 – Ind 0.8)
- ◆ Low output current harmonic distortion (THD < 3%) @ full load
- ◆ 2 MPP Trackers
- ◆ Record up to 30 event logs.
- ◆ 5” LCD display

All manuals and user guides at all-guides.com

1.5 How it Works

The operation of solar inverter is shown as the figure 1-1. In order to save energy and electricity, solar inverter convert the DC input power supplied from the PV Array into 3-phase AC output power to Grid.

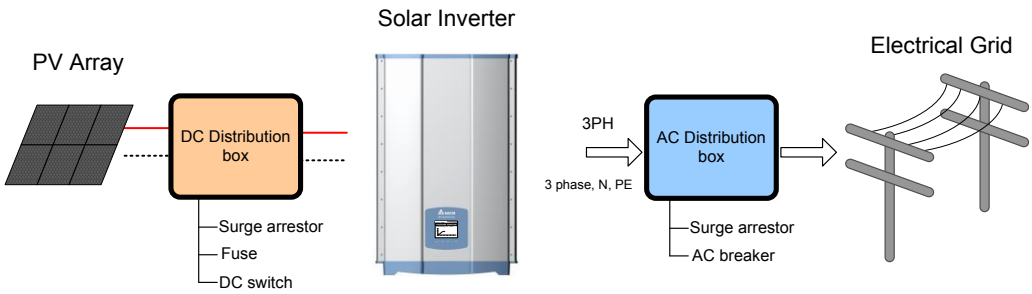

Figure 1-1 Solar system operation illustration

1.6 Additional Information

For more detailed information for RPI-M8/ M10/ M12/ M15/ M15A/ M20/ M20A/ M30 or other related product information, please visit http://www.deltaww.com.

All manuals and user guides at all-guides.com

2. Installation and Wiring

2.1 Instruction before Installation

Due to the variety of users and installation environments, it is recommended to read this manual thoroughly before installation. Installation of the unit and start-up procedures must be carried out by accredited technicians.

2.2 Unpacking

Unpacking process for RPI-M8/ M10/ M12/ M15A/ M20A is shown as Figure 2-1.

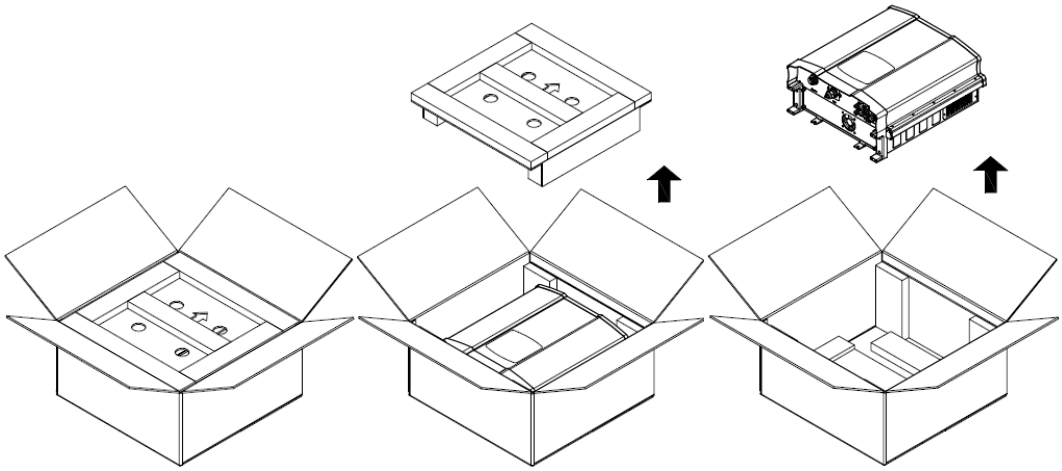

Figure 2-1 Unpacking process

Unpacking process for RPI-M15/ M20/ M30 is shown as Figure 2-2.

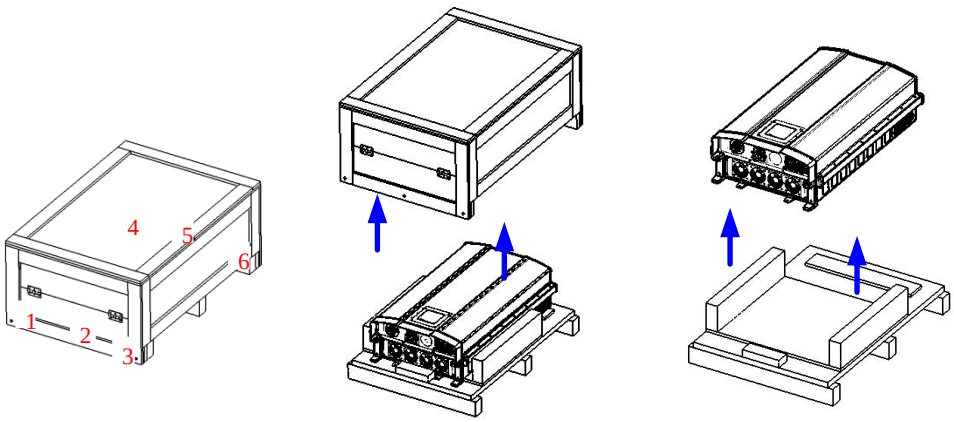

Figure 2-2 Wooden case unpacking process

All manuals and user guides at all-guides.com

2.3 Package Inspection

Unforeseeable events causing damage or movement may occur during shipment. Please check for damage on the wooden carton upon receiving your inverter.

Please check the model number and the serial number on the packaging is identical with the model number and serial number on the unit itself.

Check if all the accessories are in the package, the standard accessories are list as Table 2-1:

Table 2-1 Packing list

RPI-M8/ M10/ M12/ M15/ M15A/ M20/ M20A/ M30		
Object	Qty	Description
PV Inverter	1	RPI-M8/ M10/ M12/ M15/ M15A/ M20/ M20A/ M30 solar inverter
User Manual	1	The Instruction to provide the information of safety, Installation, specification, etc.
AC Plug	1	Connector for AC connection
Mounting Bracket	1	Wall mounting bracket to mount the solar inverter on the wall

Caution: If there is any visible damage to the inverter/accesories or any damage to the packaging, please contact your inverter supplier.

2.4 Identify of Inverter

Users can identify the model number by the information on the product label. The model number, specification and the series No. is specified on the product label. Regard to the label location, please refer to the figure 2-3.

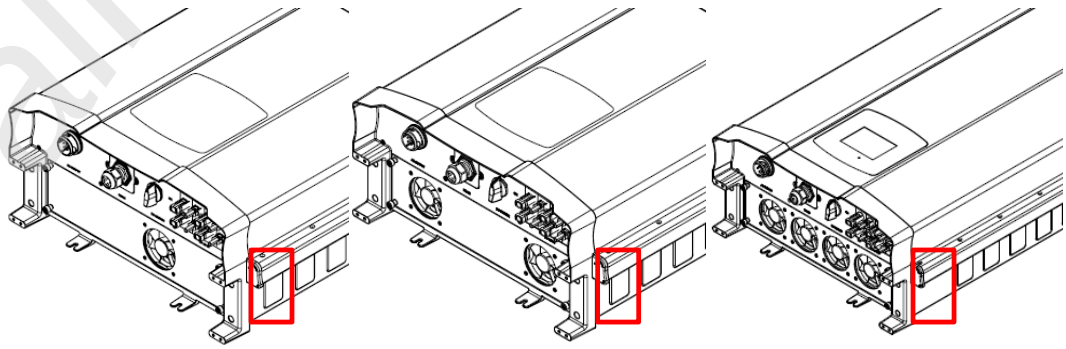

RPI-M8/ M10/ M12 RPI-M15A/ M20A RPI-M15/ M20/ M30

Figure 2-3 The identification label

All manuals and user guides at all-guides.com

3. Product Overview

3.1 Dimension

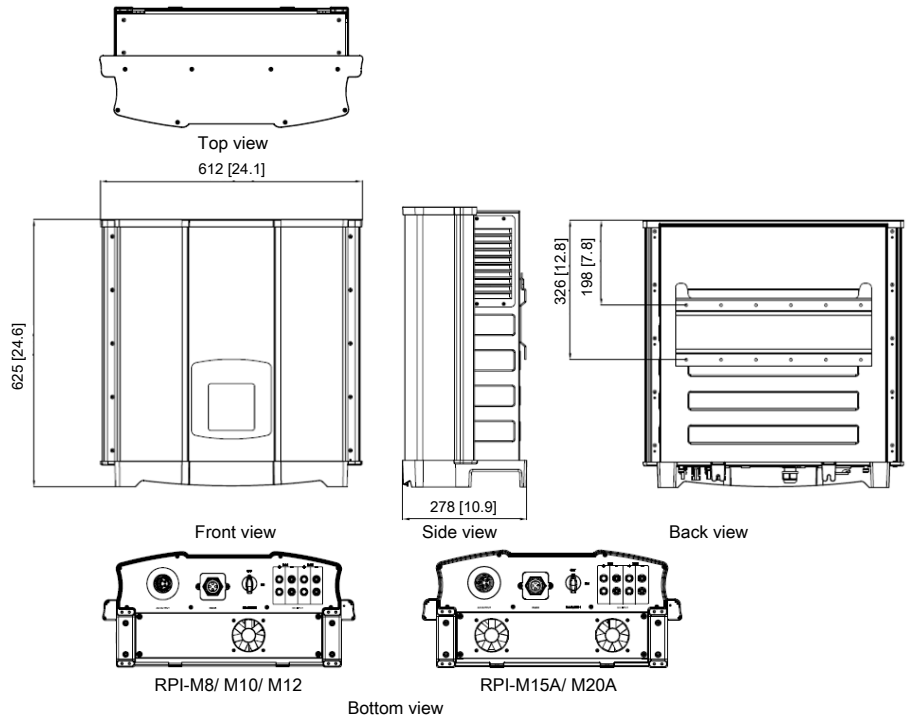

Figure 3-1 Dimension of RPI-M8/ M10/ M12/ M15A/ M20A

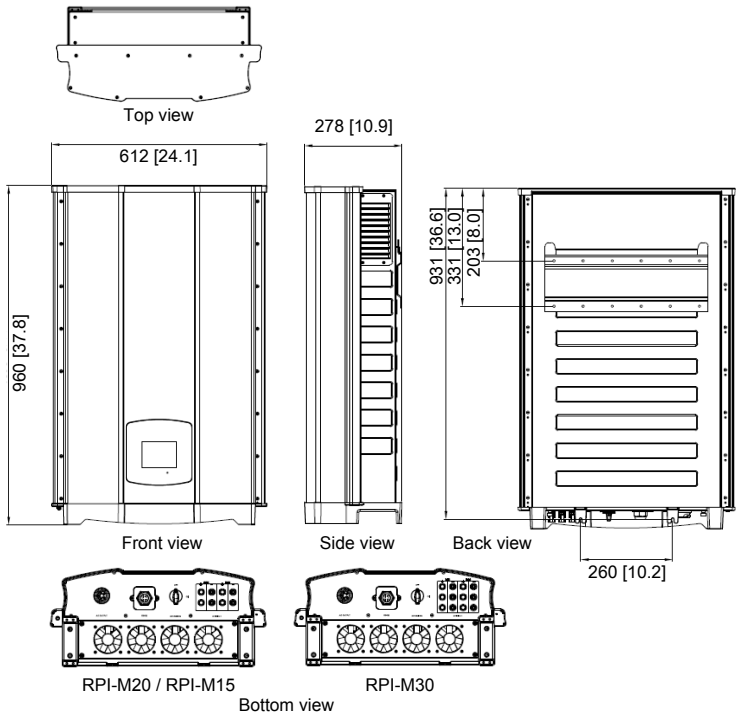

Figure 3-2 Dimension of RPI-M15/ M20/ M30

All manuals and user guides at all-guides.com

3.2 Function Introduction

The Inverter's exterior objects are shown in Figure 3-3. The detailed description can be found in sections 3.2.1 and 3.2.2.

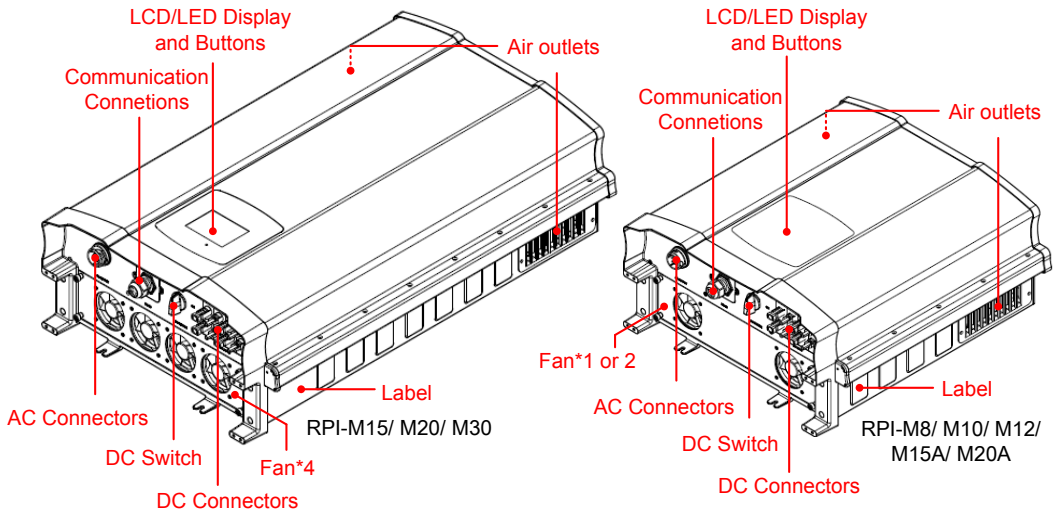

Figure 3-3 Inverter exterior objects

3.2.1 LCD Display and Buttons

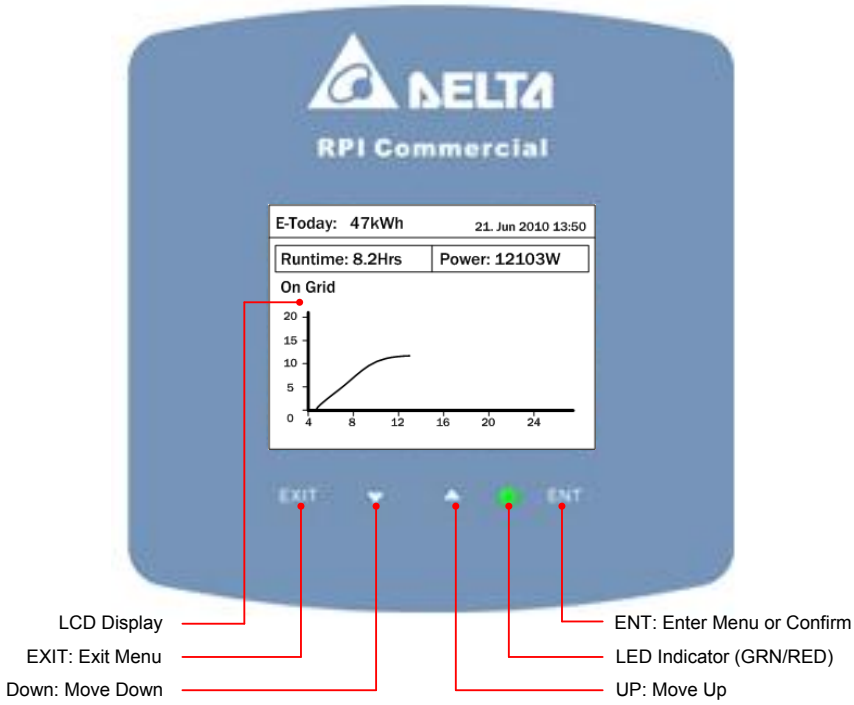

Figure 3-4 LCD display and control panel

All manuals and user guides at all-guides.com

3.2.2 Inverter Input / Output Interface

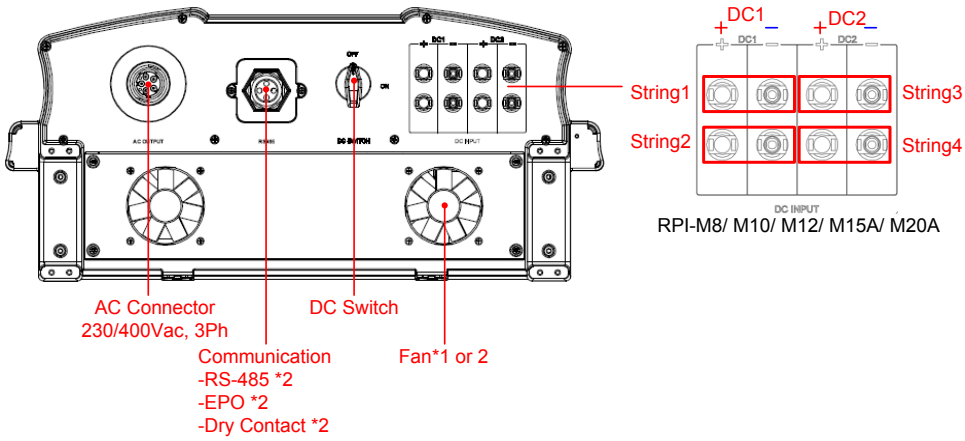

Figure 3-5 Input/Output interfaces of M8/ M10/ M12/ M15A/ M20A

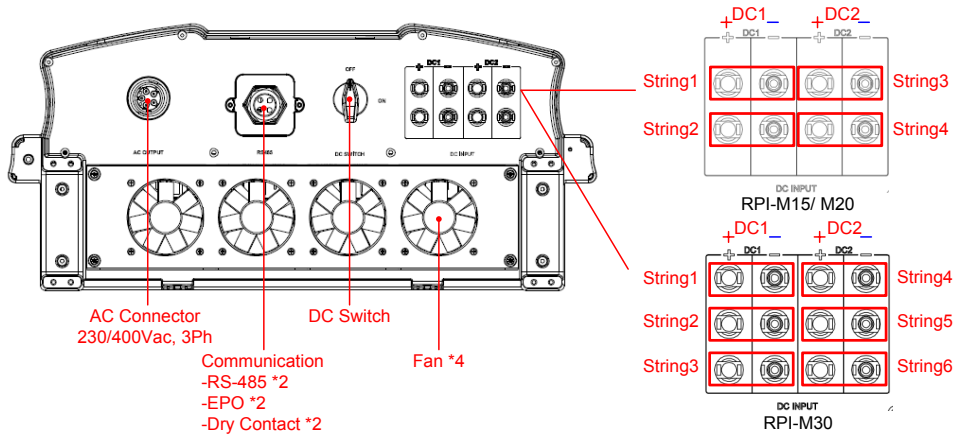

Figure 3-6 Input/Output interfaces of M15/ M20/ M30

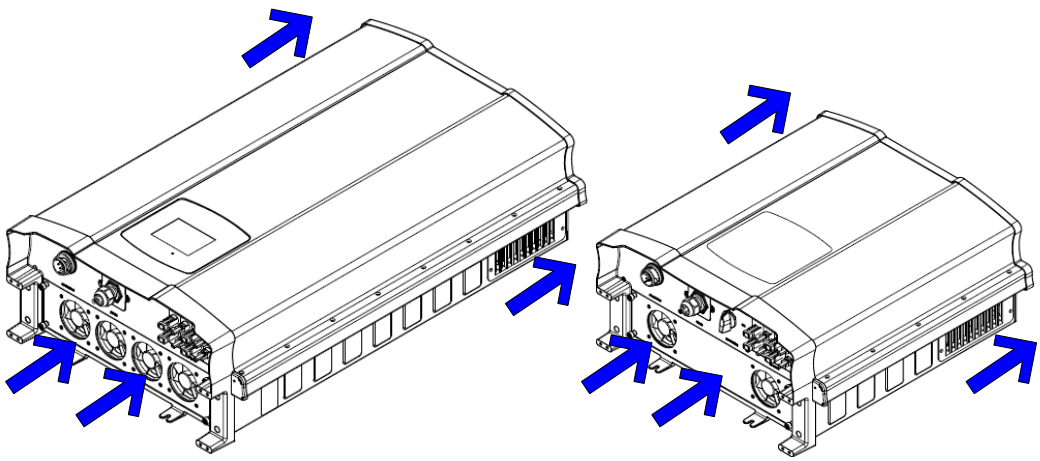

Figure 3-7 Air outlet illustration

All manuals and user guides at all-guides.com

4. Installation

4.1 Installing Location

WARNING！

- Do not install the unit near or on flammable surfaces.
- Please mount the unit tightly on a solid/smooth surface.

CAUTION！

The unit should not be installed in a direct sunlight.

4.2 Mounting

This unit is designed to be wall-mounted. Please ensure the installation is perpendicular to the wall and the AC plug at the base of the unit. Do not install the device on a slanting wall. The dimensions of the mounting bracket are shown in the figure below. There are 12pcs of M6 screws required for mounting plate. Fix the supplied wall-mount plate securely on the wall before attaching the inverter onto the mounting plate.

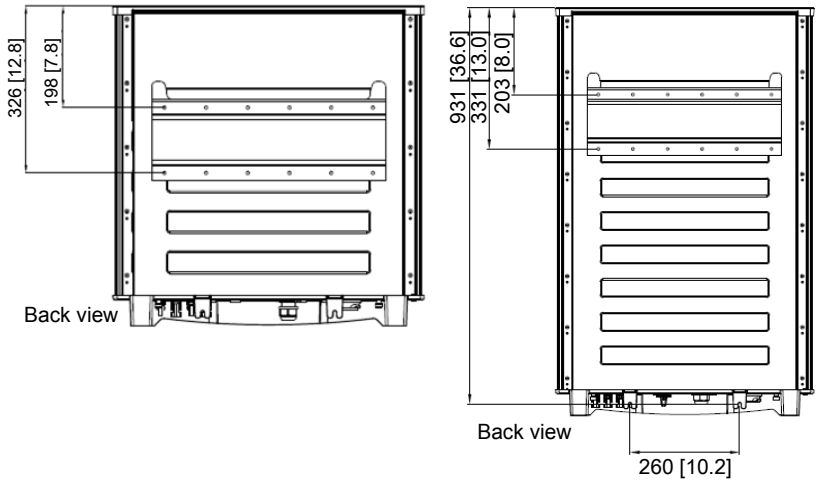

All manuals and user guides at all-guides.com

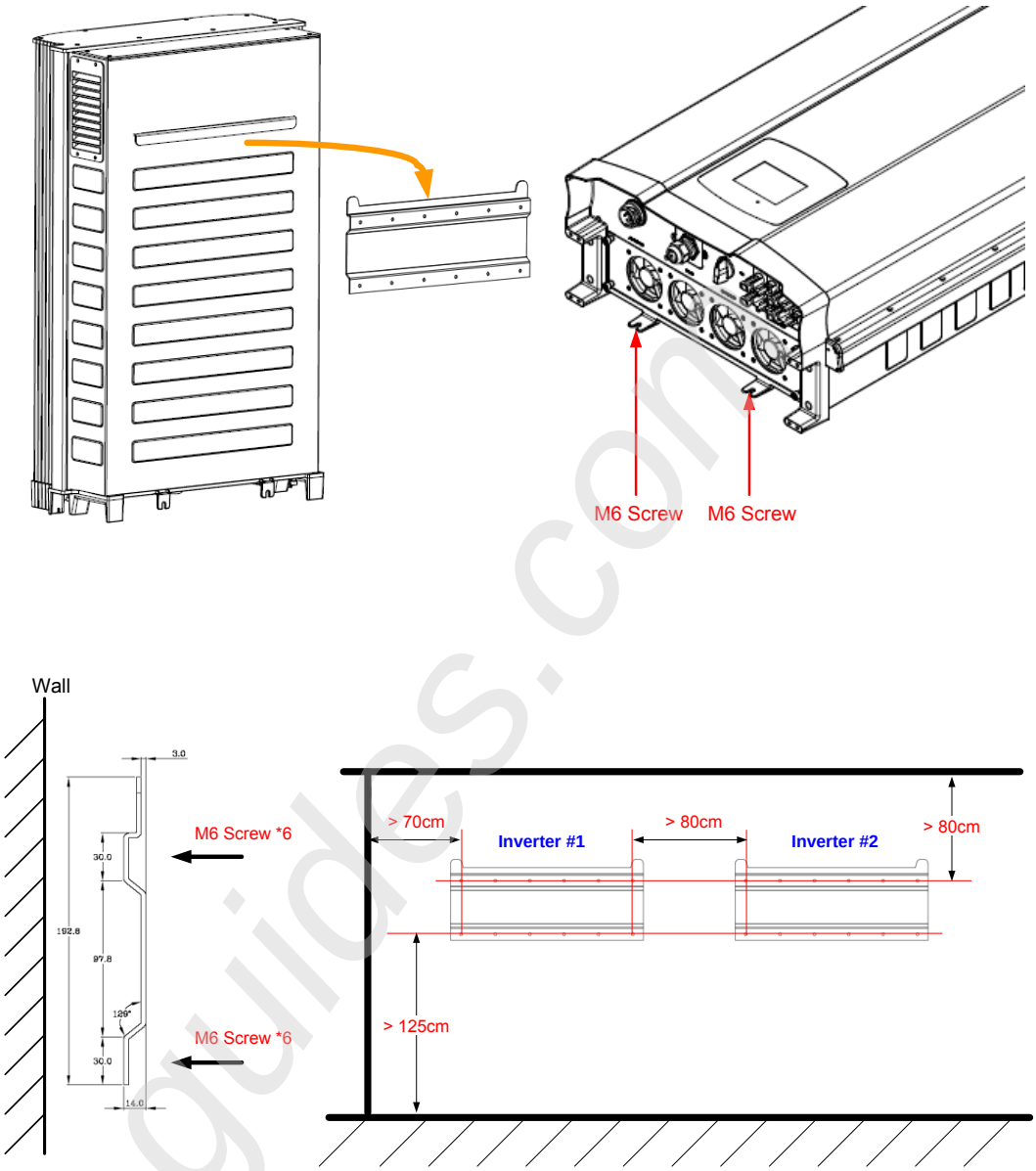

Figure 4-1 Screw the mounting bracket

all-guides.com

All manuals and user guides at all-guides.com

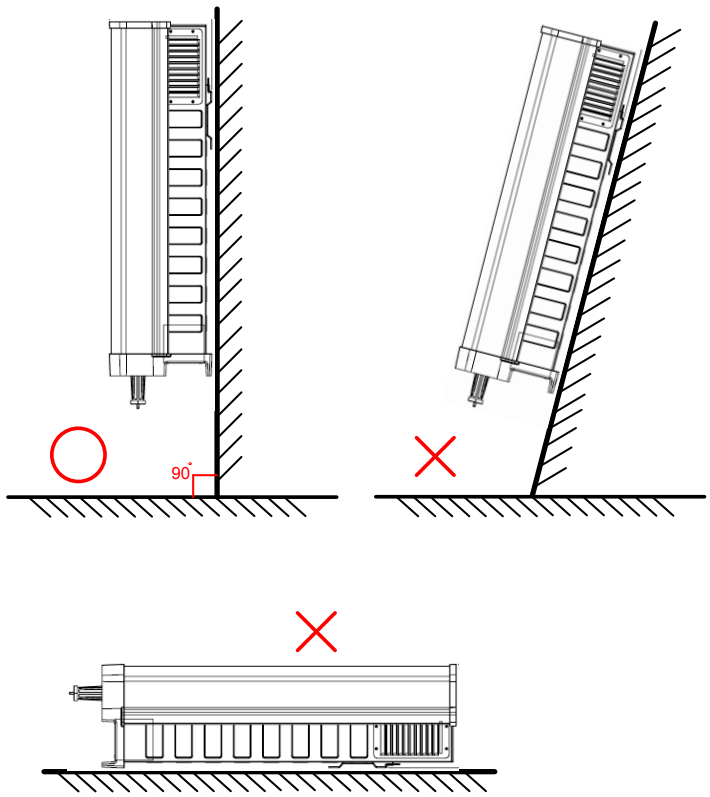

Figure 4-2 Correct and incorrect installation illustration

CAUTION !

- The bracket supplied with the unit is specially designed and should be the only mounting device used for the unit.
- It is recommended to install the inverter in a suitable location which offers non-obscured and safe access, in turn ensuring easy access for service and maintenance.
- Please leave an appropriate gap in between units when installing several solar inverter systems.
- Please install solar inverter at an eye level to allow easy observation for operation and parameter setting.
- Ambient temperature -20°C~60°C.(power derating above 40°C)
- It is essential to ensure sufficient space for product operation as shown in Figure 4-3.

All manuals and user guides at all-guides.com

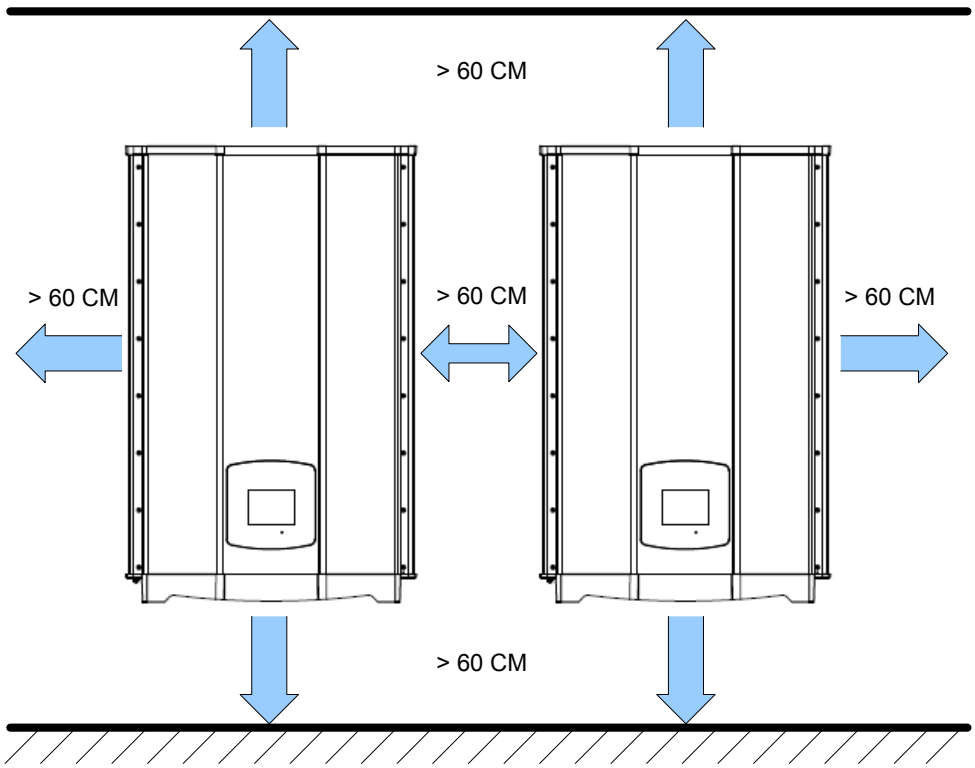

Figure 4-3 Proper installation gap

All manuals and user guides at all-guides.com

5. Wiring

5.1 Preparation before Wiring

1. Ensure voltage values and polarities are correct.
2. When grounding the solar array, an isolation transformer is required due to the RPI-series not having galvanic isolation between the DC-input and AC-output.
3. The ground fault detection is a fixed internal setting. It cannot be modified.
4. Whole system wiring and connections can be seen in Figure 5-1 and 5-2.
5. Inverter can accept DC inputs in parallel (1 MPP tracker/2 parallel inputs).
6. Different DC connection type needs different settings of insulation detection. About setting, please refer to **7.2.6.3 Install Setting**.

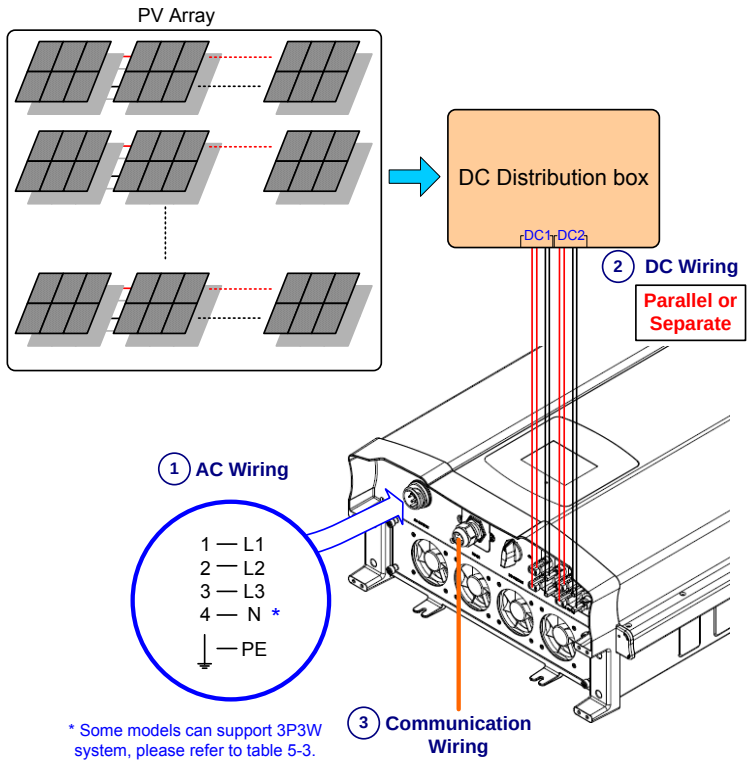

Figure 5-1 Connection of a system for floating DC inputs

All manuals and user guides at all-guides.com

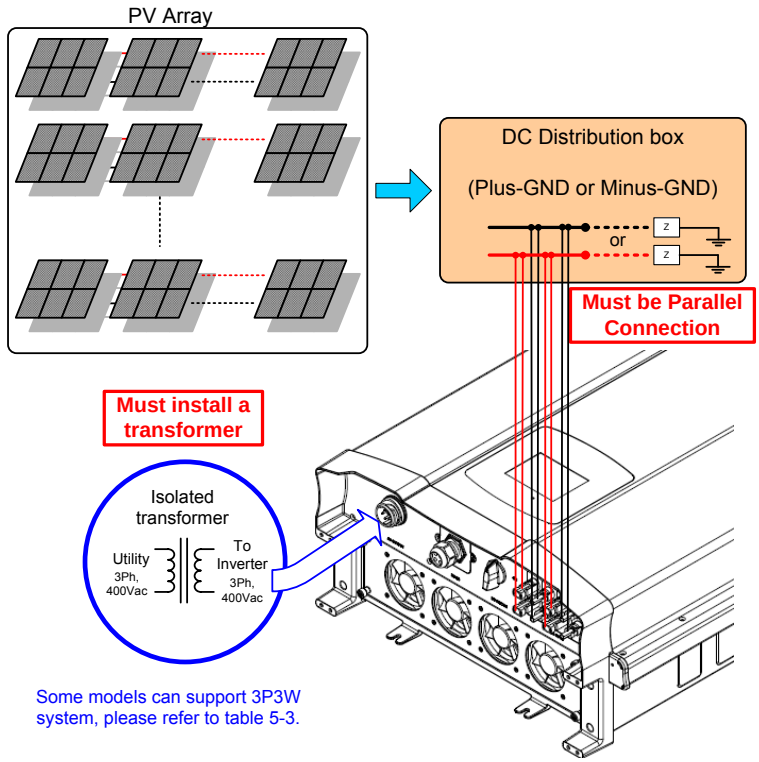

Figure 5-2 Connection of system with positive/negative ground

WARNING！ SHOCK HAZARD

Note: Whenever a PV array is exposed to sunlight, a shock hazard may exist due to output wires or exposed terminals. To reduce the risk of shock during installation, cover the array with an opaque (dark) material and ensure that the Disconnect Device in the inverter is set to OFF before commencing any wiring.

All manuals and user guides at all-guides.com

5.2 AC Grid Connection: 3-Phase+PE or 3-Phase+N+PE

WARNING! Death and serious injuries may occur.
Before AC wiring, please ensure AC breaker is switched off.

5.2.1 Required Protective Devices and Cable Cross-sections

It is recommended to install upstream circuit breakers between AC side and inverter side for over current protection.

Table 5-1 Recommended upstream protection

Model	Upstream circuit breaker
RPI-M8	20A
RPI-M10	20A
RPI-M12	30A
RPI-M15	30A
RPI-M15A	30A
RPI-M20	40A
RPI-M20A	40A
RPI-M30	60A

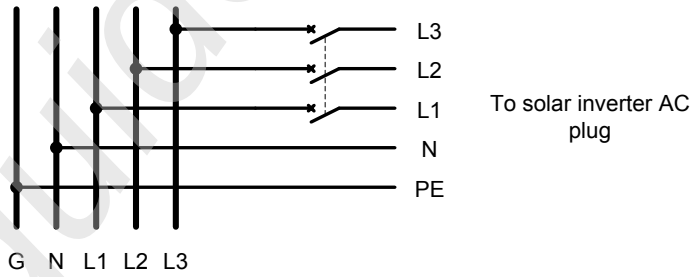

The AC cable must be jacked and meet the specification in table 5-2.

Table 5-2 Wire size of AC input

Model	Current Rating	Wire size	Torque	Temperature
RPI-M8 RPI-M10 RPI-M12 RPI-M15 RPI-M15A RPI-M20 RPI-M20A	40 A	5 - 8 mm^2	0.7 N·m	Meet UL 10070
RPI-M30	60 A	10 mm^2 or 6 AWG	3 N·m	Meet UL 10070

All manuals and user guides at all-guides.com

AC's wiring can be separated into 3-phase and PE (3P3W) or 3-phase, N, and PE (3P4W). Only some models can support 3P3W system. Please refer to table 5-3. The following instruction is based on 3P4W. If the grid system is 3P3W, please ignore the description of N.

CAUTION！ Machine and equipment damage may occur.

- Make sure to choose the correct wire size AC cable.
- Failure to follow these instructions may cause AC plug damage.

Follow the steps below to strip the wires before assembling the AC plug:

a) Trim the L1, L2, L3, and N wire to 52.5 mm (2.0 inch).
b) Strip 12 mm (0.5 inch) of insulation from all wire ends.
c) Remove 55 mm (2.2 inch) of AC cable outer jacket.

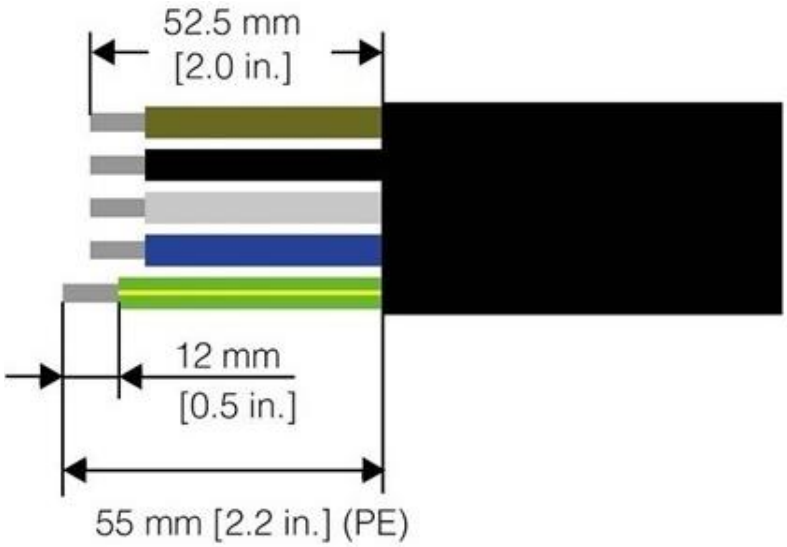

Figure 5-3 Stripping the wire

All manuals and user guides at all-guides.com

Assemble the AC plug and wires as the procedures shown in figure 5-4(for all models except RPI-M30) and figure 5-5(for RPI-M30 model only). Inverter allows either positive or negative phase sequence. That means the sequence of L1~ L3 can be reversed. However, N and PE must be connected correctly.

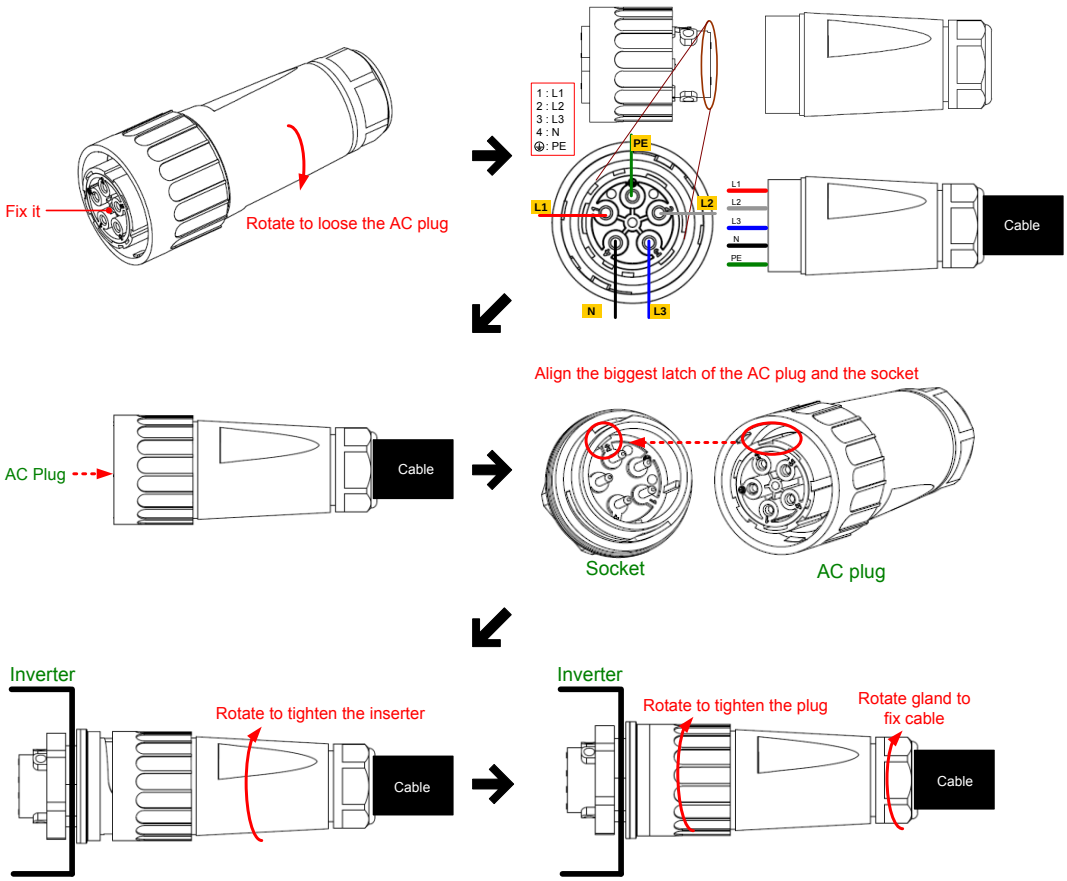

Figure 5-4 AC plug illustrationfor M8/ M10/ M12/ M15/ M15A/ M20/ M20A.

All manuals and user guides at all-guides.com

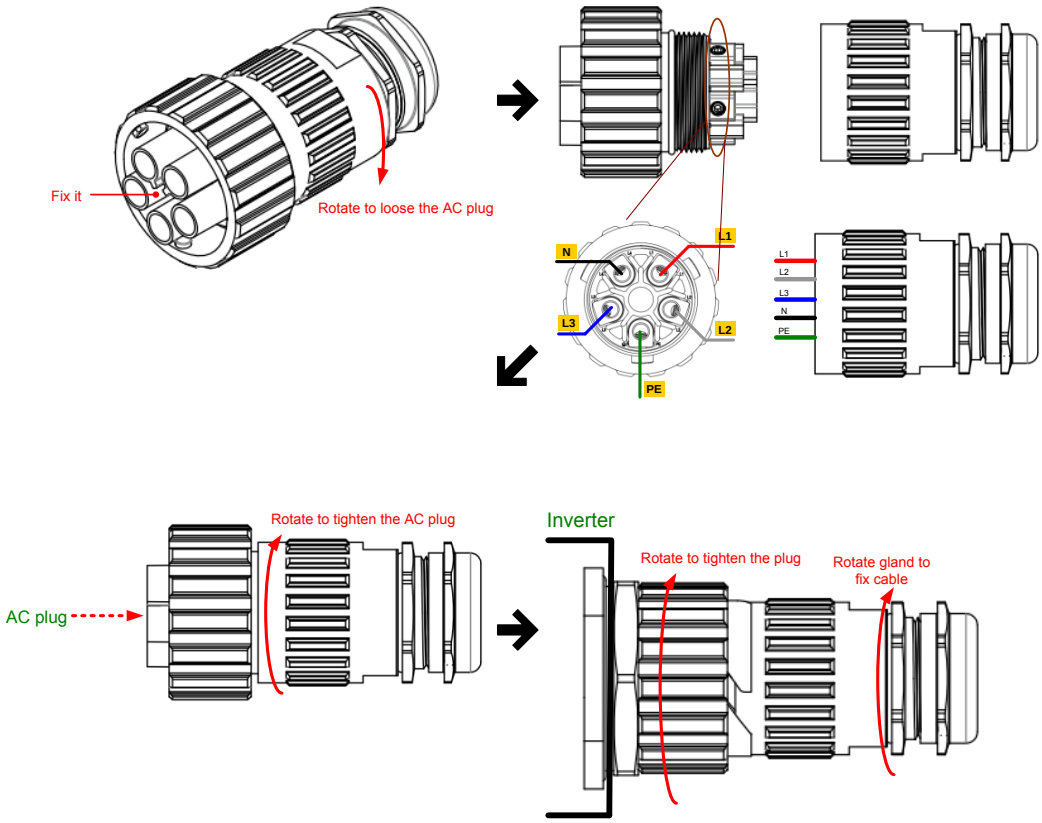

Figure 5-5 AC plug illustration for M30

Table 5-3 The wiring system of the inverter.

Model / Wiring	RPI-M8/ M10/ M12	RPI-M15/ M20 P/N: RPIXX3N5430098 or 09
3P3W+PE	✗	✗
3P4W+PE	✓	✓
Model / Wiring	**RPI-M15/ M20 P/N: RPIXX3N5431000**	**RPI-M15A/ M20A/ M30**
3P3W+PE	✓	✓
3P4W+PE	✓	✓

After wiring, installer should choose the AC connection type on the control panel. About setting, please refer to **7.2.6.3 Install Setting**.

The AC voltage should be as followings:

3P3W	3P4W
L1-L2: 400 Vac ± 10%	L1-N: 230 Vac ± 10%
L1-L3: 400 Vac ± 10%	L2-N: 230 Vac ± 10%
L2-L3: 400 Vac ± 10%	L3-N: 230 Vac ± 10%

All manuals and user guides at all-guides.com

5.3 DC Connection (from PV Array)



WARNING!

- When undertaking DC wiring, please ensure the correct polarities are connected.
- When undertaking DC wiring, please ensure that the power switch on the PV array is OFF.



CAUTION!

- The connection number of PV Array, open circuit voltage and power of String_1 and String _2 must be coherent.
- The connection number of PV Array, open circuit voltage and power of String _3 and String _4 must be coherent.
- The maximum open circuit voltage of PV Array cannot be higher than 1000V.
- The range of MPP Voltage of Input1 and Input2 shall be in 350~800 Vdc.
- The device installed between PV Array and inverter must meet the following specifications:
  a.) Rated voltage > open-circuit voltage of PV Array.
  b.) Rated current > short-circuit current of PV Array.
- The input power to the inverter should not higher than the rated power shown in table 5-4.

Table 5-4 Maximum rating of input power

Type of limit	**RPI-M8**	**RPI-M10**	**RPI-M12**	**RPI-M15**
Total input power	8.8 kW	11 kW	13.2 kW	16.5 kW
Input1 or Input2	5.9 kW	7.4 kW	8.8 kW	8.25 kW
Type of limit	**RPI-M15A**	**RPI-M20**	**RPI-M20A**	**RPI-M30**
Total input power	16.5 kW	22 kW	22 kW	32 kW
Input1 or Input2	8.25 kW	11 kW	11 kW	16 kW

Table 5-5 Cable size

Model	**Current Rating**	**Wire size**	**Temperature**
M8	DC 10A	2 - 3mm^2 / 14 AWG	Meet UL 10070
M10/ M12	DC 20A	3 - 5mm^2 / 12 AWG	Meet UL 10070
M15A/ M20A	DC 34A	5 - 6mm^2 / 10 AWG	Meet UL 10070
M15/ M20/ M30	DC 34A	5 - 6mm^2 / 10 AWG	Meet UL 10070

All manuals and user guides at all-guides.com

DC wiring polarity is divided into positive and negative, which is shown as in Figure 5-6. The connection shall be coherent with the indication marked on inverter.

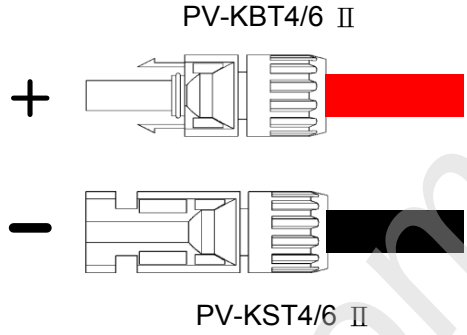

Figure 5-6 DC Wiring illustration

all-guides.com

All manuals and user guides at all-guides.com

5.4 Communication Module Connections

The Communication Module supports the functions of communication with a computer. There are two types of modules. One has RJ45-type RS-485 connector, and the other has terminals-type RS-485 connector.

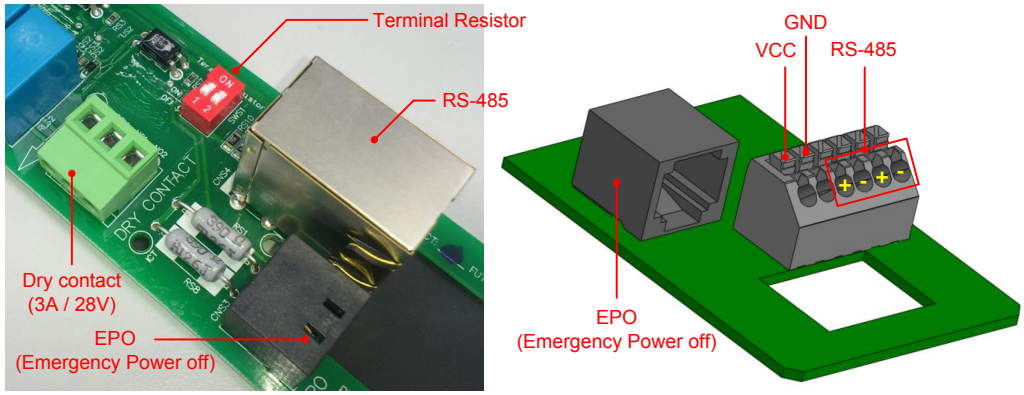

RJ45-type Terminals-type

Figure 5-7 Communication module

5.4.1 RS-485 Connection

The pin definition of RS-485 is shown as in table 5-6. Installers should switch **ON** the terminal resistor when single inverter is installed. The wiring of multi-inverter connection is shown as figure 5-8. Installers should switch **ON** terminal resister at the first and last devices of the RS485 chain as shown in Figure 5-8. The other terminal resisters should be switched **OFF**. Please refer to table 5-8 for the terminal resister setting.

Table 5-6 Definition of RS 485 pin

Pin	Function
4	DATA-
5	DATA+
7	VCC (+12V)
8	GND

RJ45-type

Pin	Function
1	VCC (+12V)
2	GND
3	DATA+
4	DATA-
5	DATA+
6	DATA-

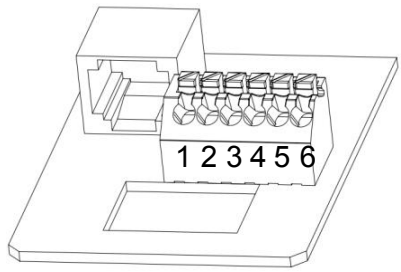

Terminals-type

All manuals and user guides at all-guides.com

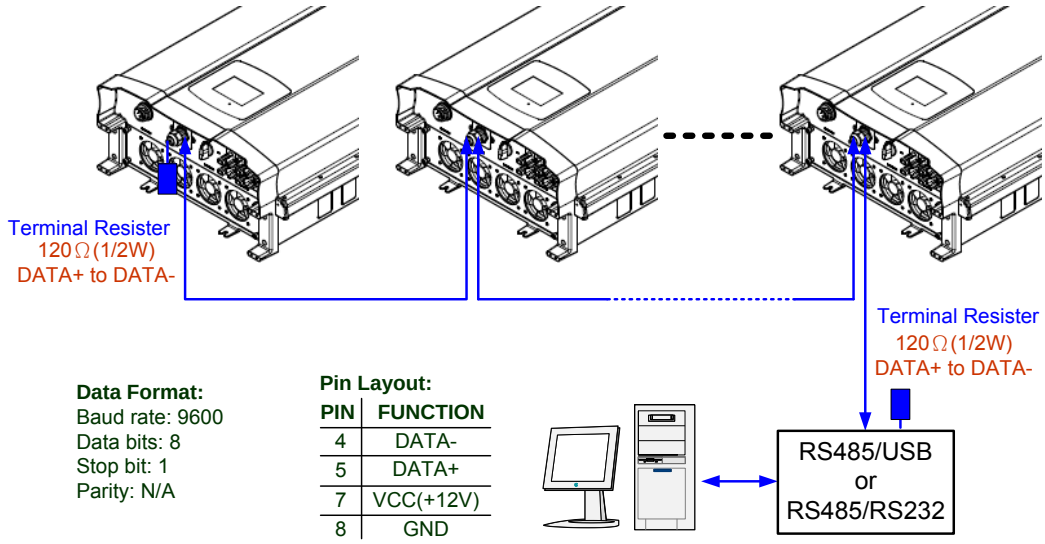

Figure 5-8 Multi-inverter connection illustration

Table 5-7 RS-485 data format

RS-485 Data format	
Baud rate	9600, 19200, or 38400
Data bit	8
Stop bit	1
Parity	N/A

Tabel 5-8 Terminal resister setting

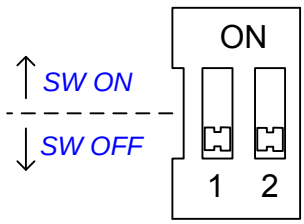

SW / Terminal Resistor	1	2
OFF	OFF	OFF
ON	ON	OFF
	OFF	ON
	ON	ON

All manuals and user guides at all-guides.com

5.4.2 EPO Functions

RJ45-type Communication Module provides 2 sets of emergency power off function (EPO1 and EPO2). Terminals-type Communication Module only has 1 set of EPO (EPO1). When the outer external switch is shorted, the inverter will shutdown immediately.

Tabel 5-9 EPO functions

Enable EPOs	
EPO1	Short Pin1 & Pin2
EPO2	Short Pin4 & Pin5

5.4.3 Dry Contact Connection

RPI-series provides 1 set of Dry Contact function. When inverter is on grid, Com & NO2 will be shorted. When the Fan Fail is detected, Com & NO1 will be shorted.

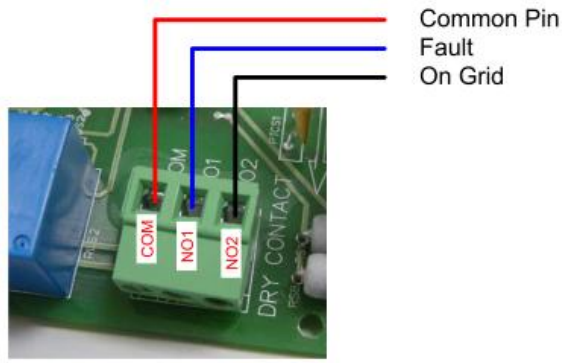

Figure 5-9 Dry contact port & Assignments

All manuals and user guides at all-guides.com

6. Active / Reactive Power Control and Fault Ride Through

Installers can adjust Active/Reactive power control only when Grid System are set to: Germany MV, Germany LV, Italy LV, or Italy MV (a password is required to change these settings). Fault ride through (FRT) can only be adjusted when Grid System is set to: Germany MV, Italy MV, or Italy LV.

There are 2 settings for active power control and 4 settings for reactive power control that can be configured based on the requirement of the local network operator. It can be configured to have active power control and/or one of the reactive power control functions.

6.1 Active Power Control

6.1.1 Power Limit

According to BDEW's technical guideline in page 25 (June 2008 version):

It must be possible to operate the generating facility at reduced power output. In the cases listed below, the network operator is entitled to require a temporary limitation of the power feed-in or disconnect the facility:

- *potential danger to secure system operation,*
- *congestion or risk of overload on the network operator's network,*
- *risk of islanding,*
- *risk to the steady-state or dynamic network stability,*
- *rise in frequency endangering the system stability,*
- *repairs or implementation of construction measures,*
- *within the scope of generation management/ feed-in management/ network security*
- *management (see „Grundzüge zum Erzeugungsmanagement")*

User can reduce inverter output power by set percentage of actual or rated power. Please refer to **7.2.6.4.1 Power Limit** for the settings procedure.

All manuals and user guides at all-guides.com

6.1.2 Power vs. Frequency

There're 2 different operation curves that depend on Country setting.
Germany LV: follow the curve in Figure 6-1-a
Germany MV/ Italy BT/ Italy MT: follow the curve in Figure 6-1-b
legend:

P_m	is the power generated at the time of exceeding f_{start}
P	is the feeding power
f	is the mains frequency
fstart	is the frequency when the power reduction starts
fstop	is the frequency when there is has zero power
Gradient	is the slope of power reduction

Configuration can be made to meet the requirements from the network operator.
Please refer to **7.2.6.4.2 Power vs. Frequency** for the settings procedure.

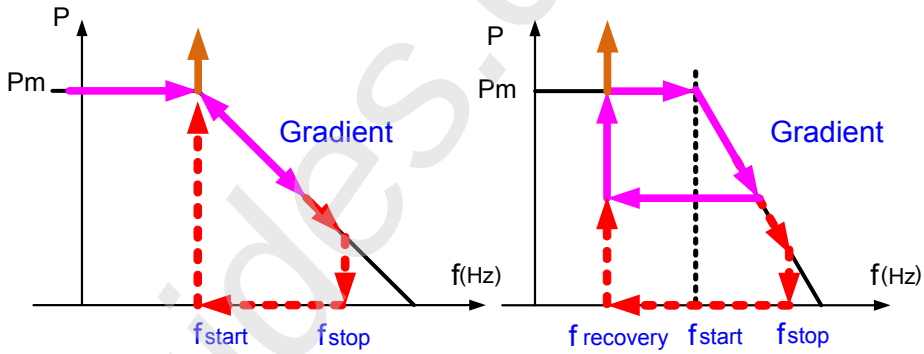

Figure 6-1 Power vs. frequency characteristic

all-guides.com

All manuals and user guides at all-guides.com

6.2 Reactive Power Control

According to BDEW:

With active power output, it must be possible to operate the generating plant in any operating point with at least a reactive power output corresponding to a active factor at the network connection point of

cos φ = 0.95 underexcited to 0.95 overexcited

Values deviating from the above must be agreed upon by contract. In the consumer reference arrow system (see Annex B.4), that means operation in quadrant II (under-excited) or III (overexcited).With active power output, either a fixed target value for reactive power provision or a target value variably adjustable by remote control (or other control technologies) will be specified by the network operator in the transfer station. The setting value is either

a) a fixed active factor cosφ or

b) a active factor cosφ(P) or

c) a fixed reactive power in MVar or

d) a reactive power/voltage characteristic Q(U).

6.2.1 Fixed Active Factor cosφ

Configurations can be made to set the power factor from Cap 0.8 to Ind 0.8 (inverter would stop reactive power control if output power is below 10% rated power).

6.2.2 Active Factor cosφ(P)

Once user enables this method, inverter will deliver the reactive current according to output active power in that moment. The below figure is an example. Please refer to **7.2.6.4.4 cosφ(P)** for the settings procedure.

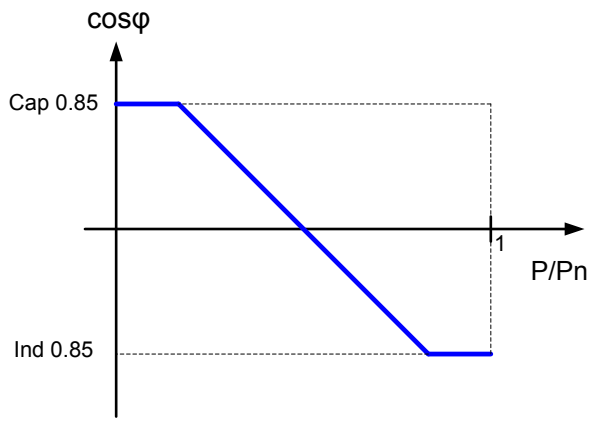

Figure 6-2 cosφ(P) characteristic

All manuals and user guides at all-guides.com

6.2.3 Fixed Reactive Power

When this function is enabled, the inverter will send reactive power (ie. Q) in relation to the fixed reactive power setting. The range is Cap 53% to Ind 53%.

6.2.4 Reactive Power / Voltage Characteristic Q(U)

After selecting “Q(U) control”, User can adjust “Q” against the Grid voltage operation curves shown in Figure 6-3.

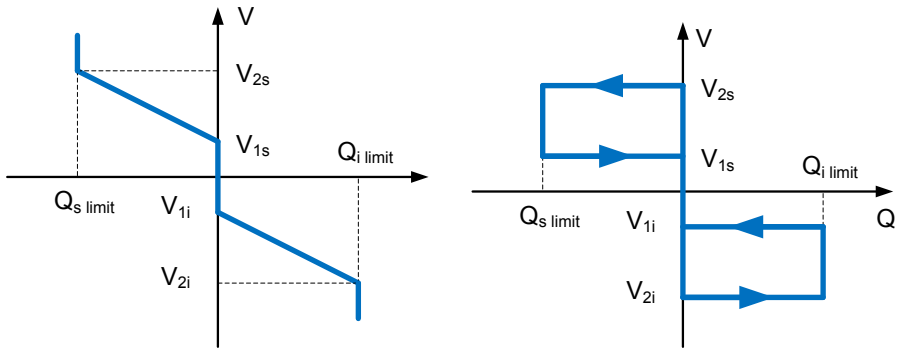

CurveA *CurveB*

Figure 6-3 Q(U) characteristic.

All manuals and user guides at all-guides.com

6.3 Fault Ride Through (FRT)

According to BDEW:

2.5.1.2 Dynamic network support

Dynamic network support means voltage control in the event of voltage drops within the high and extra-high voltage network with a view to avoiding unintentional disconnections of large feed-in power, and thus network collapse. In the light of the strong increase in the number of generating plants to be connected to the medium-voltage network, the integration of these plants into the dynamic network support scheme is becoming ever more important. Consequently, these generating plants must generally participate in dynamic network support even if this is not required by the network operator at the time of the plant's connection to the network. That means that generating plants must be able in technical terms

- *not to disconnect from the network in the event of network faults,*
- *to support the network voltage during a network fault by feeding a reactive current into the network,*
- *not to extract from the medium-voltage network after fault clearance more inductive reactive power than prior to the occurrence of the fault.*

These requirements apply to all types of short circuits (i.e. to single-phase, two-phase and three-phase short circuits).

Just like in the Transmission Code 2007 7, a distinction is made in these guidelines between type-1 and type-2 generating plants with regard to their behaviour in the event of network disturbances. A type-1 generating unit exists if a synchronous generator is directly (only through the generator transformer) connected to the network. All other plants are type-2 generating units.

The following conditions shall apply to type-2 generating plants, taking the Transmission Code 2007, Section 3.3.13.5, into account:

- *Generating units must not disconnect from the network in the event of voltage drops to 0 % Uc of a duration of ≤ 150 ms.*
- *Below the blue line shown in Figure 2.5.1.2-2, there are no requirements saying that generating plants have to remain connected to the network.*

Voltage drops with values above the borderline 1 must not lead to instability or to the disconnection of the generating plant from the network (TC2007; 3.3.13.5, section 13; extended to asymmetrical voltage drops).

If the voltage drops at values above the borderline 2 and below the borderline 1, generating units shall pass through the fault without disconnecting from the network. Feed-in of a short-circuit current during that time is to be agreed with the network operator. In consultation with the network operator, it is permissible

All manuals and user guides at all-guides.com

to shift the borderline 2 if the generating plant's connection concept requires to do so. Also in consultation with the network operator, a short-time disconnection from the network is permissible if the generating plant can be resynchronized 2 seconds, at the latest, after the beginning of the short-time disconnection. After resynchronization, the active power must be increased with a gradient of at least 10% of the nominal capacity per second (TC2007; 3.3.13.5, section 14).

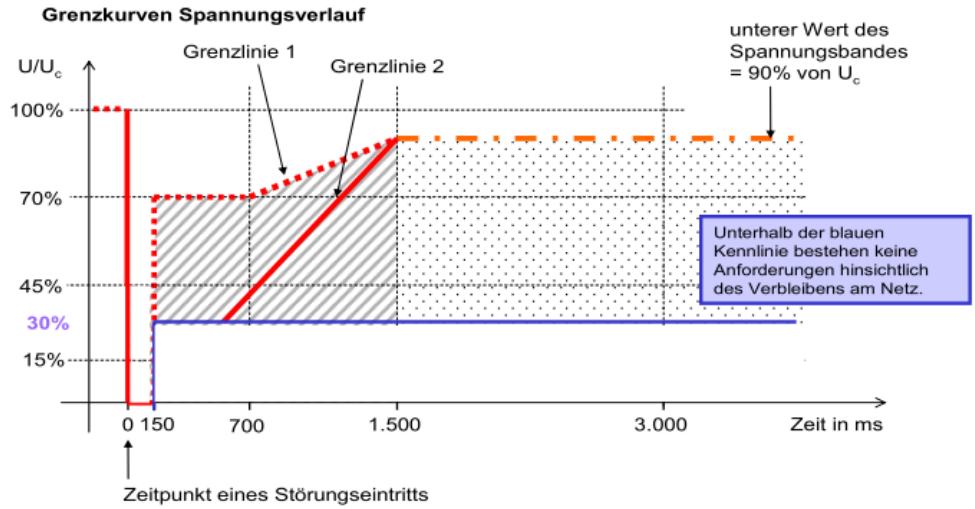

Figure 6-4 Borderlines of the voltage profile of a type-2 generating plant at the network connection point

RPI-M8/ M10/ M12/ M15/ M15A/ M20/ M20A/ M30 implements the FRT behavior as the figure below, in area

1. Keep normally operate
2. Feed-in reactive current according to ΔU/Un and K factor
3. Short-time disconnect
4. Long-time disconnect

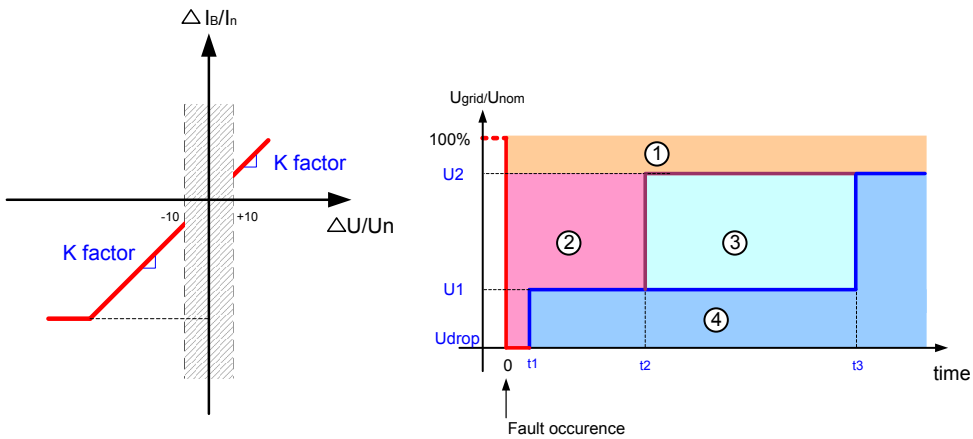

Figure 6-5 FRT characteristic

All manuals and user guides at all-guides.com

7. Turn on/off PV inverter

WARNING：BURN HAZARD

The enclosure temperature may exceed over 70°C while operating. To avoid injury, do not touch the surface of the inverter whilst the unit is in operation.

After installation, please ensure the AC, the DC and communication connection are correct. Switch on the DC switch. When enough power is generated from the PV array, the device will operate automatically and will initially 'self-test'. This self-test takes approximately 2 minutes and will occur at first start-up of the day.

The display on the inverter includes a 320x240 pixel LCD display and LED indicator lights to indicate inverter status. The green and red colour LED indicator light represents different inverter statuses.

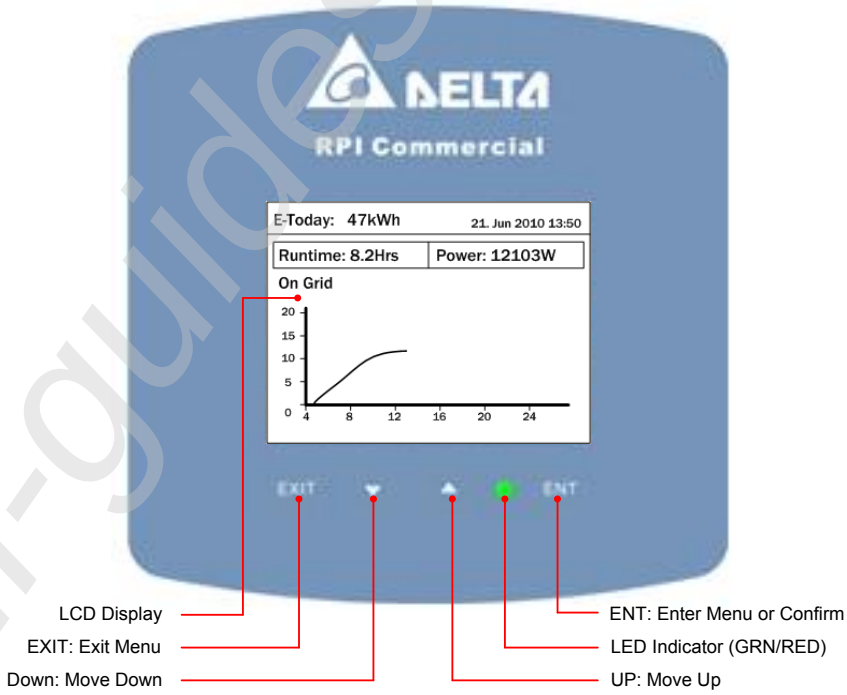

Figure 7-1 LCD display &control panel

All manuals and user guides at all-guides.com

Table 7-1 LED indicator

Condition	Green LED	Red LED
Standby or Countdown	FLASH *1	OFF
Power ON	ON	OFF
Error or Fault	OFF	ON
Night time (No DC)	OFF	OFF
Bootloader mode	FLASH *2	

*1 ON 1s / OFF 1s

*2 ON 1s / OFF 1s, Green and Red are interleaving

On the first start up, the country and language has to be set. The system will show the main menu after these are set.

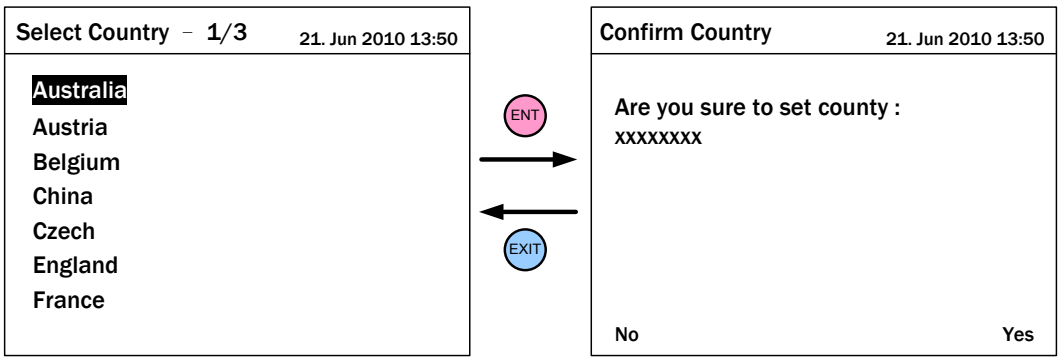

Figure 7-2 Select county page

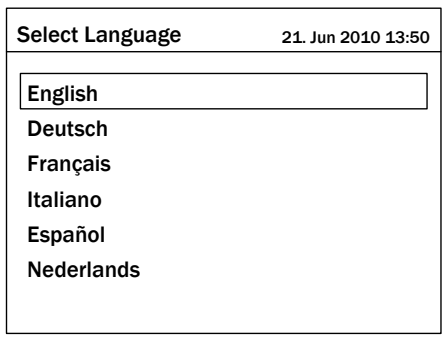

Figure 7-3 Select language page

All manuals and user guides at all-guides.com

7.1 Home Page

When inverter is operating normally, the LCD will display the homepage as shown in Figure 7-4, user can get the information of output power, inverter status, E-today, date and time.

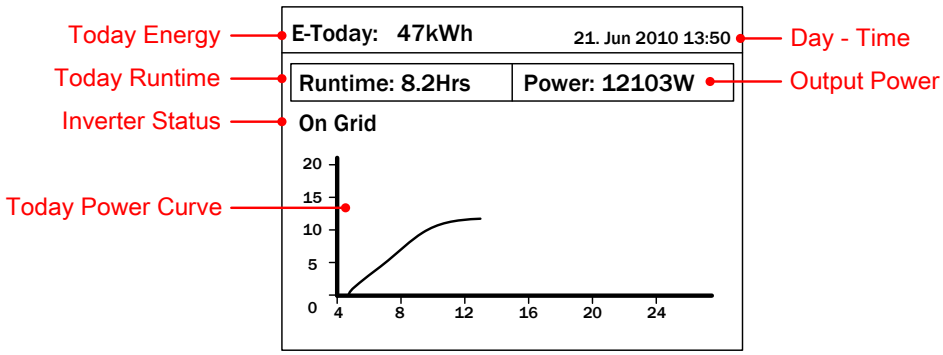

Figure 7-4 Home page

7.2 LCD Flow Chart

Press the EXIT button to enter the menu page (Figure 7-5). The option “E-today” is the homepage.

Power Meter	7.2.1
Energy Log	7.2.2
Event Log	7.2.3
Operation Data	7.2.4
Inverter Information	7.2.5
Setting	7.2.6

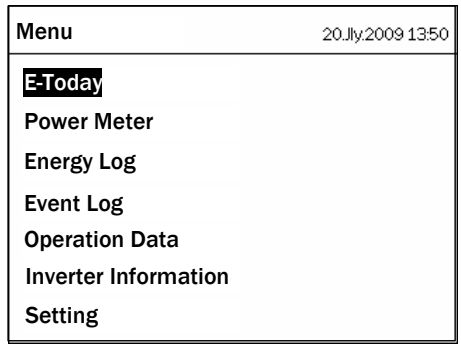

Figure 7-5 Menu page

7.2.1 Power Meter

This page shows the information about input and output power.

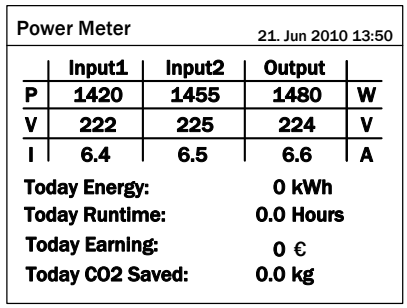

Figure 7-6 Power meter page

All manuals and user guides at all-guides.com

7.2.2 Energy Log

Press ENTER on this page to view the historical data on the power generated from a yearly, monthly and daily basis.

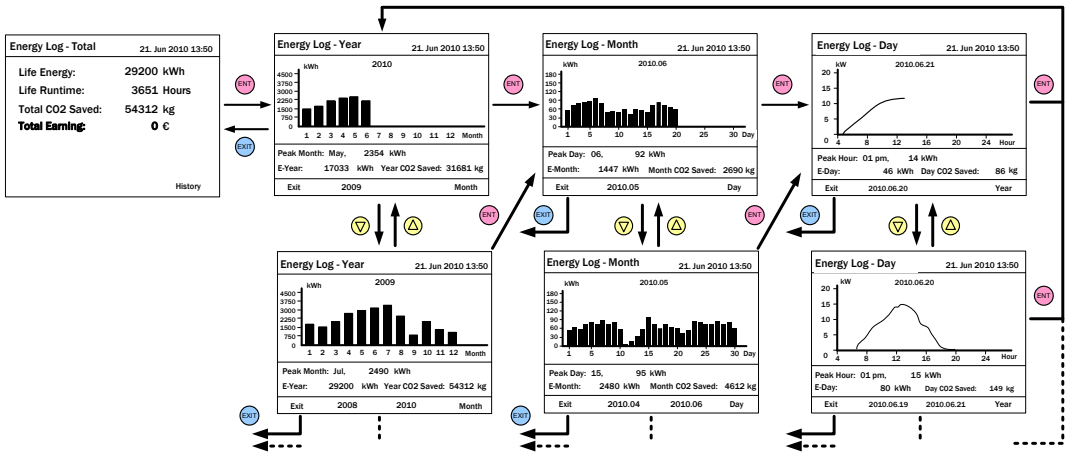

Figure 7-7 Energy log flow chart

7.2.3 Event Log

This page displays all the events (errors or fault) and it can show 30 records at at a time. Press ENTER to view all the statistical data.

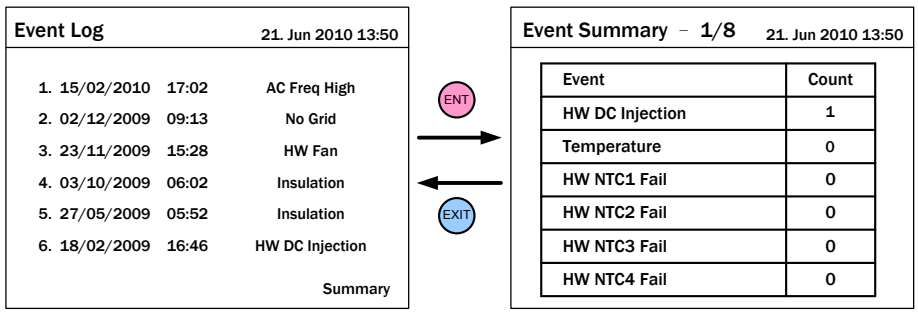

Figure 7-8 Event log flow chart

All manuals and user guides at all-guides.com

7.2.4 Operation Data

The operation data is split into 4 pages. It records the maximum and/or minimum values of history; including voltage, current, power and temperature.

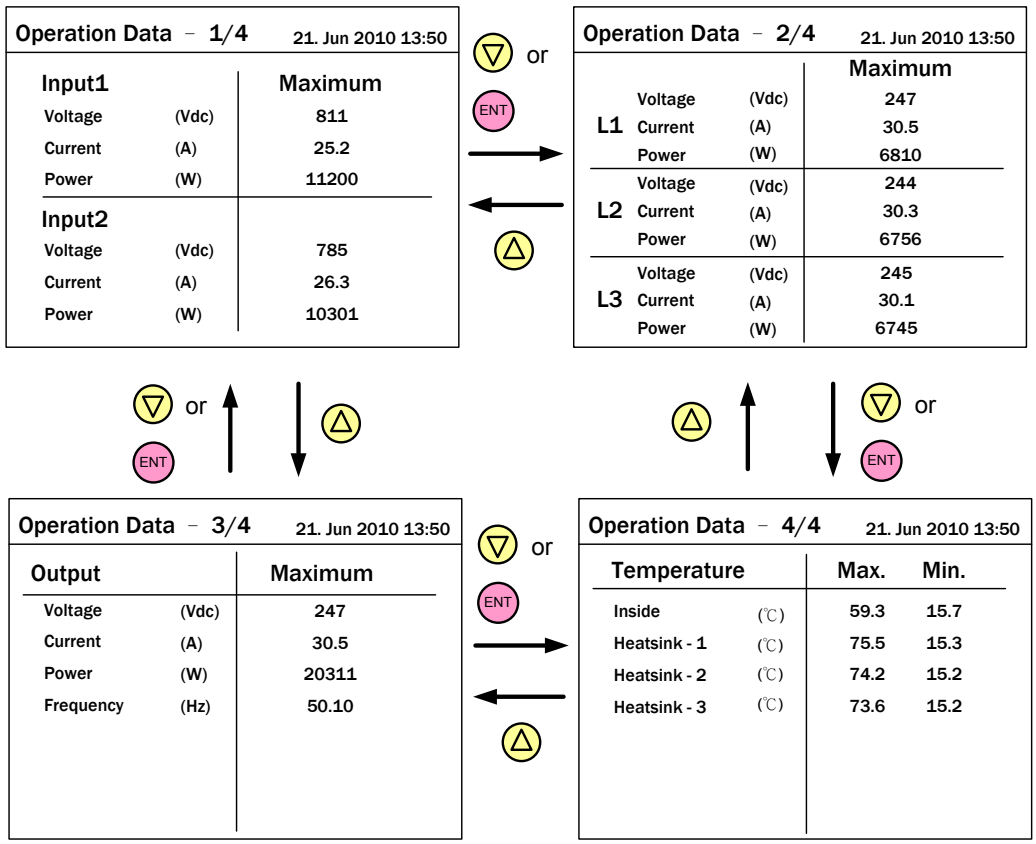

Figure 7-9 Operation data flow chart

7.2.5 Inverter Information

This page has the following information: serial number, firmware version, installation date and inverter ID. If user wants to change inverter ID, please refer to **7.2.6.3 Install Setting**.

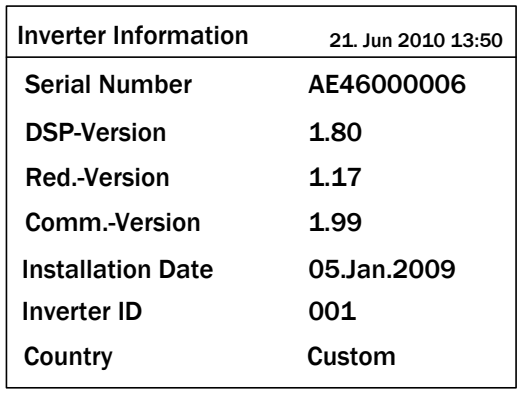

Figure 7-10 Inverter information page

All manuals and user guides at all-guides.com

7.2.6 Settings

The Settings page includes Personal, Coefficients, Installation, Active/Reactive Power Control and FRT Settings.

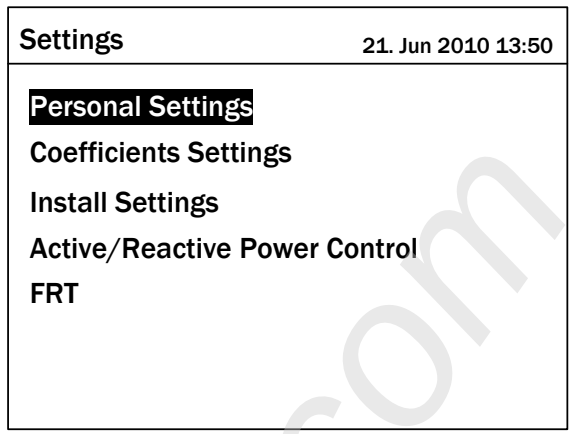

Figure 7-11 Setting page

7.2.6.1 Personal Setting

The language, date, time, screensaver, LCD brightness and contrast can be set in the Personal Settings.

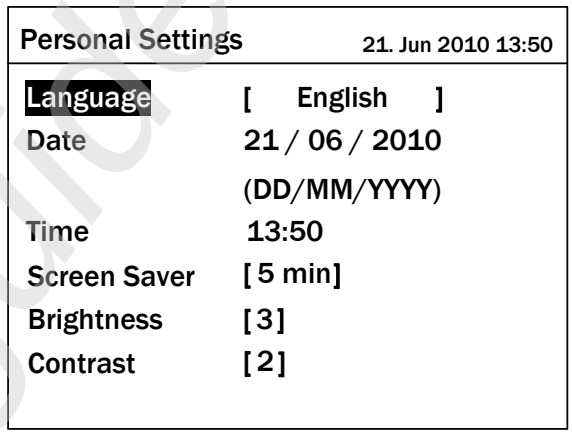

Figure 7-12 Personal setting page

all-guides.com

All manuals and user guides at all-guides.com

7.2.6.2 Coefficient Setting

Users can set the following parameters according their needs.

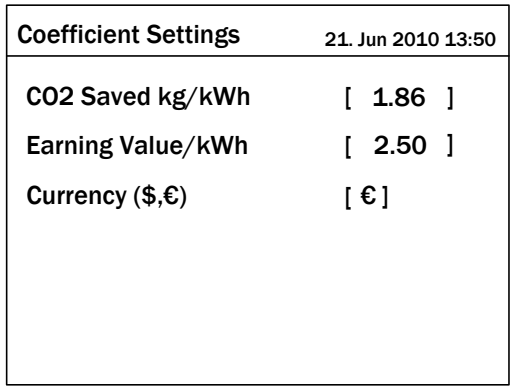

Figure 7-13 Coefficient setting page

7.2.6.3 Installation Settings

A password is required to enter the Installation Setting. These settings are different for end customers and installers. The password once set, cannot be reset. Once a the correct password has been entered, access to configure the Inverter ID, Insulation, RCMU, Reconnection Time, Ramp-up Power and AC Connection will be granted.



CAUTION !

The following settings can only be adjusted by installers or engineers. Changing these settings may result in damage to the inverter and other equipment.

- **Insulation:** Inverter will measure the impedance between the Array and PE before connecting to grid. If the impedance is lower than the value that is set in Insulation Settings, inverter will stop connecting to grid. There are 6 modes users can select in Insulation settings: ON, Positive Ground, Negative Ground, DC1 Only, DC2 Only, and Disable. After an analysis has been made for the site, the impedance should be set to best suit the environment of the installation.
- **DC Injection:** Inverter will shutdown if the DC component in the AC current is over the limit.
- **RCMU:** If there is a leakage current between the input and output which exceeds the limit, inverter will shutdown immediately.
- **Reconnction Time:** The time before the inverter connects to grid.
- **Ramp-up Power:** The rate of increase in the output power. (%/min)

All manuals and user guides at all-guides.com

◆ **AC connection:** Depending on the site conditions, the two systems available are 3P3W and 3P4W.

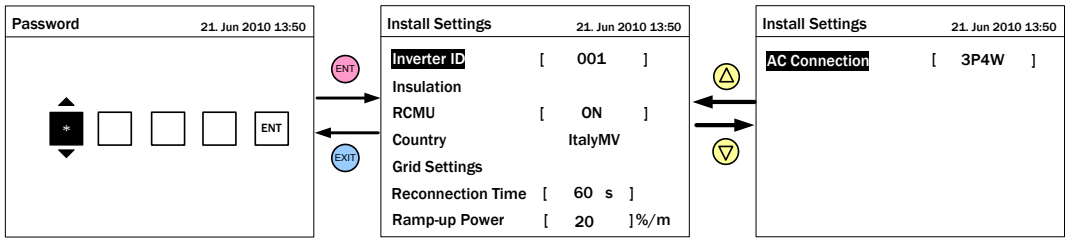

Figure 7-14 Install setting page –User mode

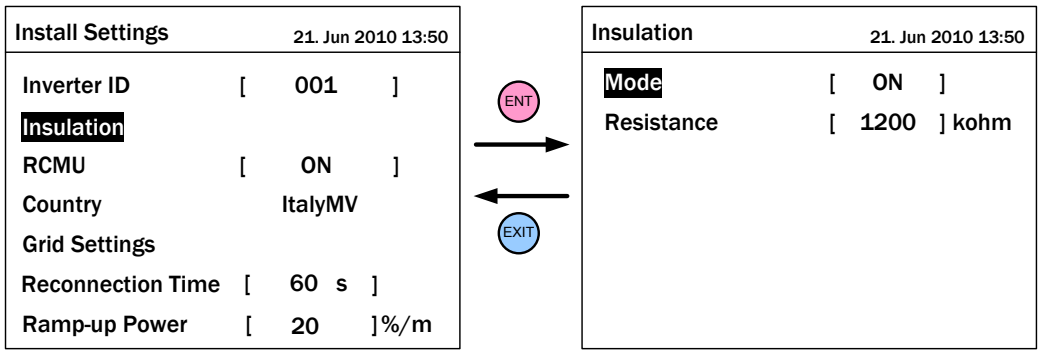

Figure 7-15 Insulation setting

The system will add the options DC-Injection, Return to Factory, Country and Grid Setting once the technician password has been entered. In Grid Setting selection, technician can adjust the protection parameters (OVR, UVR, OFR, UFR, etc) to Utility. Before setting of the protection to Utility, please set the country as “Custom.” Returning the inverter to factory settings will revert the inverter setting back to default and remove all event and energy records.

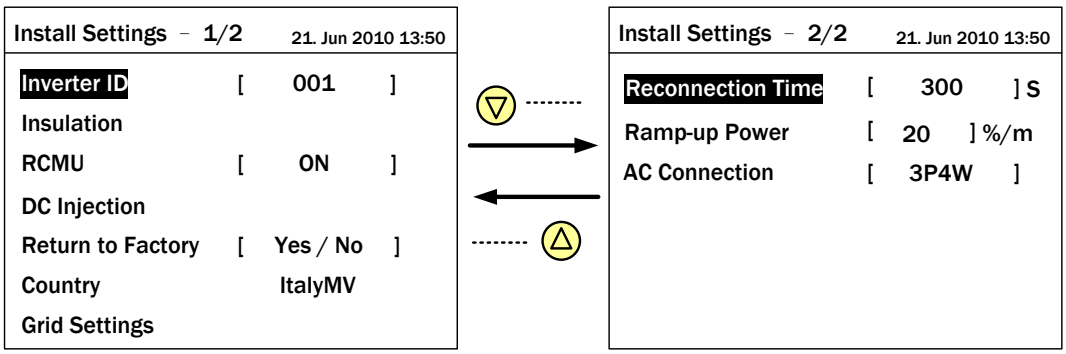

Figure 7-16 Install setting page – Installer mode

All manuals and user guides at all-guides.com

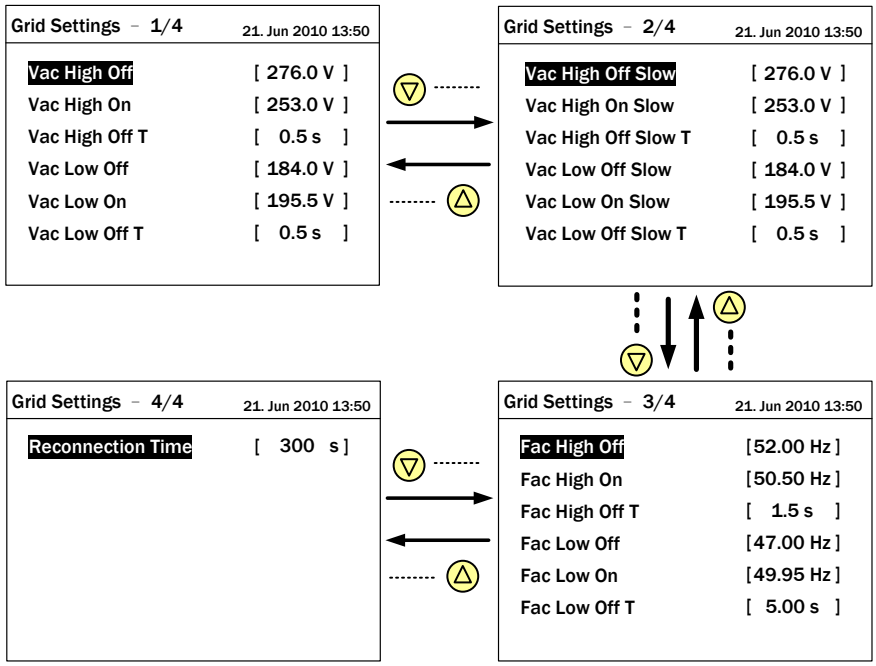

Figure 7-17 Grid setting page

There are 19 parameters on the Grid Settings page. Users can refer to table 7-2 for the function of each parameter.

Table 7-2 Grid setting parameters

Parameter	Description
Vac High Off	Inverter will be disconnected from the grid if the AC phase voltage rises to this value.
Vac High On	Inverter will be reconnected to grid if the AC phase voltage drops to this value.
Vac High Off T	If AC voltage reaches the Vac High Off value, the inverter will be disconnected in this time.
Vac Low Off	The inverter will be disconnected from grid if the AC phase voltage drops to this value.
Vac Low On	Inverter will be reconnected to grid if the AC phase voltage rises to this value.
Vac Low Off T	If the AC voltage reaches to the Vac Low Off value, the inverter will be disconnected in this time.
Vac High Off Slow	Same functionality as the Vac High Off, but the value must be set lower.
Vac High On Slow	Same functionality as the Vac High On, but the value must be set lower.

All manuals and user guides at all-guides.com

Vac High Off Slow T	Same functionality as the Vac High Off T, but the time must be set longer.
Vac Low Off Slow	Same functionality as the Vac Low Off, but the value must be set higher.
Vac Low On Slow	Same functionality as the Vac Low On, but the value must be higher.
Vac Low Off Slow T	Same functionality as the Vac High Off T, but the time must be longer.
Fac High Off	The inverter will be disconnected from grid if the AC frequency rises to this value.
Fac High On	The inverter will be reconnected to grid if the AC frequency drops to this value.
Fac High Off T	If AC frequency reaches the Fac High Off value, the inverter will be disconnected in this time.
Fac Low Off	Inverter will be disconnected from if the AC frequency drops to this value.
Fac Low On	Inverter will be reconnected to grid if the AC frequency rises to this value.
Fac Low Off T	If AC frequency reaches the Fac Low Off value, the inverter will be disconnected in this time.
Reconnection Time	The time before the inverter reconnects to grid.

7.2.6.4 Active/Reactive Power Control

User can enter this page only when the country is sets as Germany LV, Germany MV, Italy LV, or Italy MV. User has to enter user's password before enter this page.

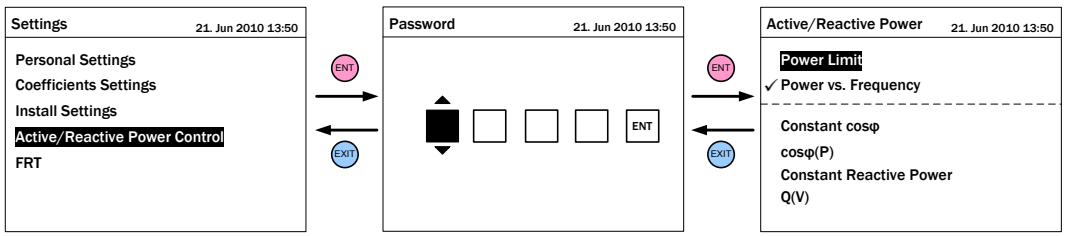

Figure 7-18 Active/Reactive powersetting page

All manuals and user guides at all-guides.com

7.2.6.4.1 Power Limit

The power limit can be set by the percentage of actual/rated power. The Mode will turn the power limiting on and off.

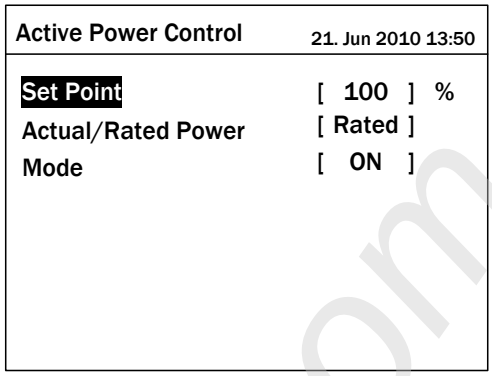

Figure 7-19 Power limit setting page

7.2.6.4.2 Power vs. Frequency

Please notice the gradient is different between Italy and other countries.

- Italy BT/ MT: used to calculate the frequency of zero power. Ie. Fstop = Fstart + Gradient * 50
- For other countries (ex. Germany LV or MV): Gradient means the slope of power reduction, ie/ -xx%/Hz

Recovery time is accessible only if Country is set as Italy BT or MT. This means If the frequency is back to normal before the time runs out, the inverter has to stay on the power at that certain period of time and it cannot increase the power.

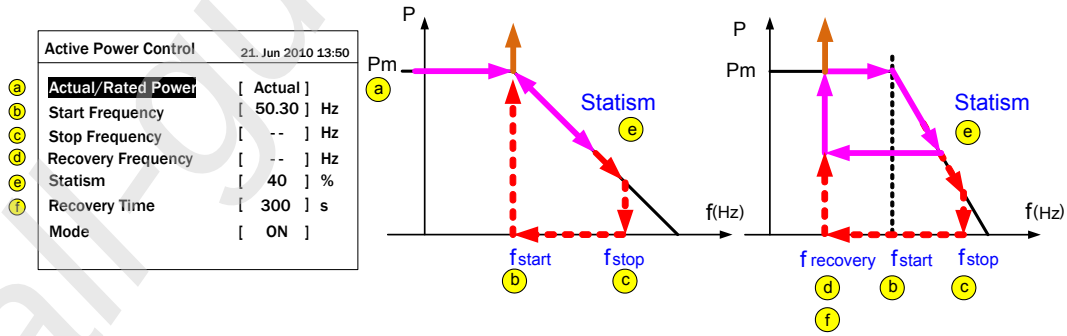

Figure 7-20 Power vs. frequency setting page.

All manuals and user guides at all-guides.com

7.2.6.4.3 Constant cosφ

When this Mode is activated, the inverter will maintain the power factor as a constant value. The range is from Cap 0.80 to Ind 0.80.

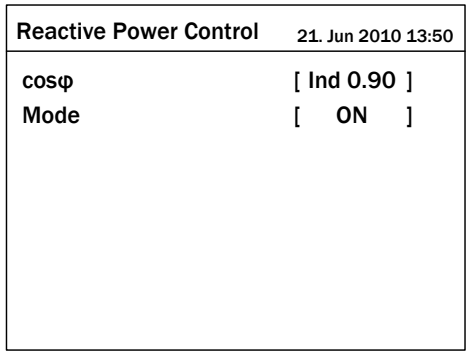

Figure 7-21 Constant cosφ setting page

7.2.6.4.4 cosφ(P)

The output power factor would be affected by feeding power. Lock-in voltage and Lock-out voltage are only adjustable if the country setting is either Italy BT or Italy MT. The Inverter will feed-in reactive power depending on the active power once the Grid voltage is higher than the Lock-in voltage. It will revert back to active power when Grid voltage is lower than Lock-out voltage. For the countries other than Italy, cosφ (P) control will not affect the Grid voltage.

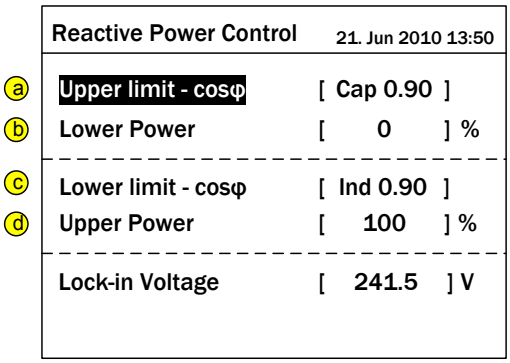

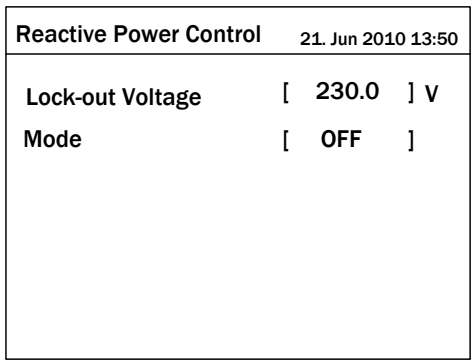

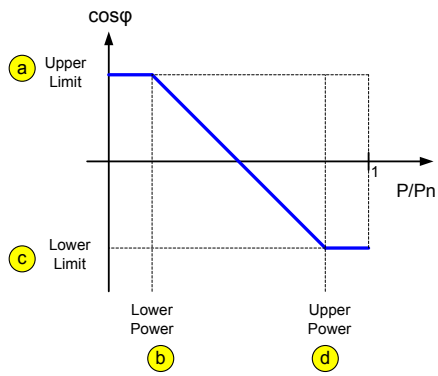

Figure 7-22 cosφ(P) setting page

All manuals and user guides at all-guides.com

7.2.6.4.5 Constant Reactive Power

When this Mode is activated, inverter will maintain the reactive power as a constant value.

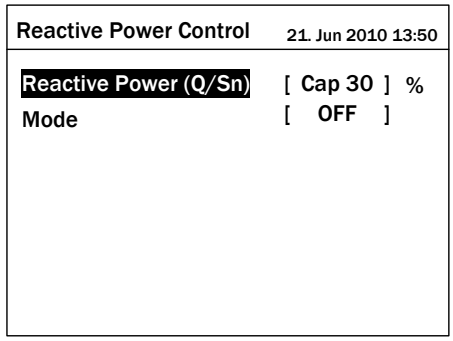

Figure 7-23 Constant Reactive Power setting page

7.2.6.4.6 Q(U)

RPI-series support two kind of Q(U) curves. Please refer to fiqure 7-24.

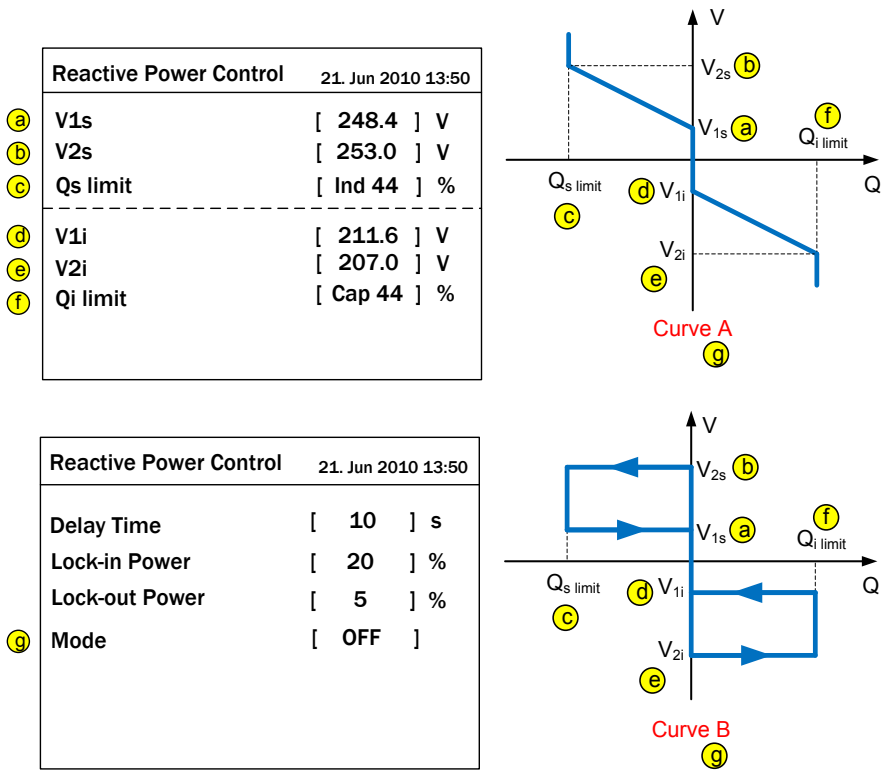

Figure 7-24 Q(U) setting page

All manuals and user guides at all-guides.com

7.2.6.5 FRT (Fault ride through)

This function is only for Germany MV, Italy LV, and Italy MV. It is not recommended that an end customers modify the default values.

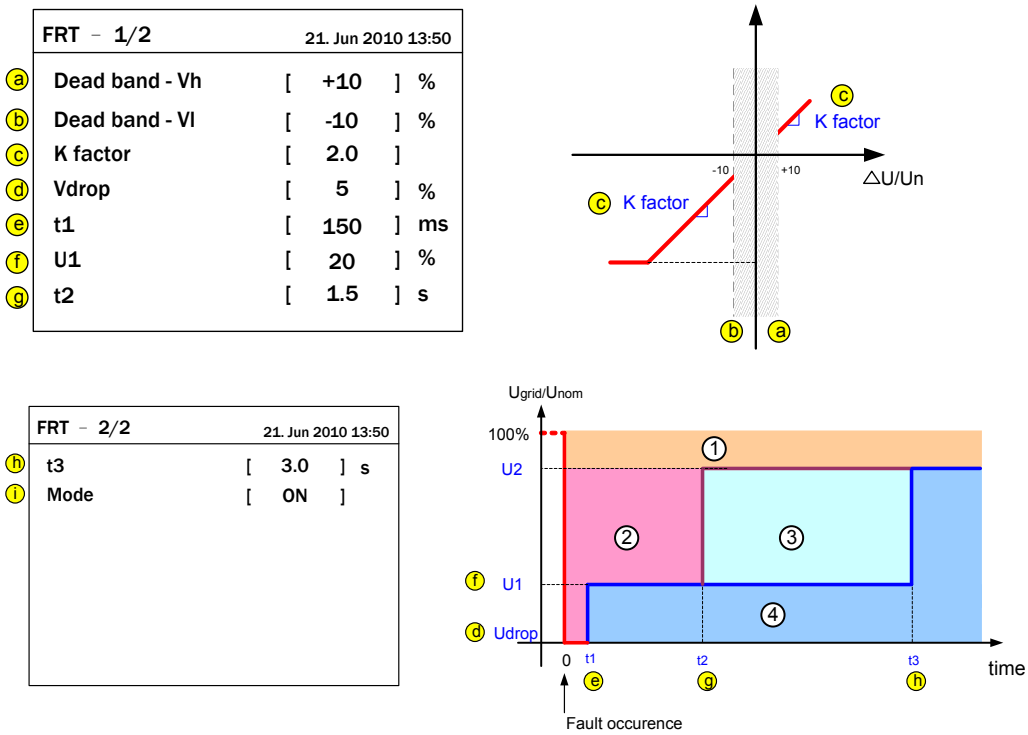

Figure 7-25 FRT setting page

All manuals and user guides at all-guides.com

8. Maintenance

In order to ensure normal operation of the inverter, please check the unit regularly. Check that all terminals, screws and cables are connected and appear as they did upon installation. If there are any impaired or loose parts, please contact your solar installer.

Ensure that there are no foreign objects in the path of the heat outlet and keep the unit and its surroundings clean and tidy.

WARNING !

Before any maintenance, please switch AC and DC power off to avoid risk of electronic shock.

8.1 Clean Fan

Loosen the 4 screws shown in Figure 8-1. Once the screws are loose, pulling the fan bracket out will expose the connectors. As shown in Figure 8-1, there is one wire per fan. The bracket is completely detachable once the connectors are disconnected as shown in Figure 8-2.

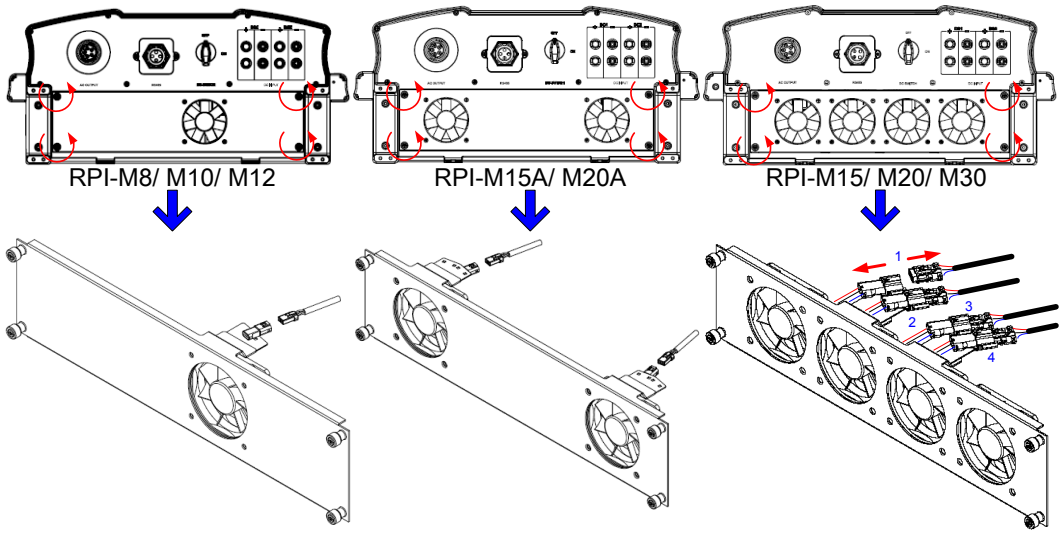

Figure 8-1 dissembling fan connections

All manuals and user guides at all-guides.com

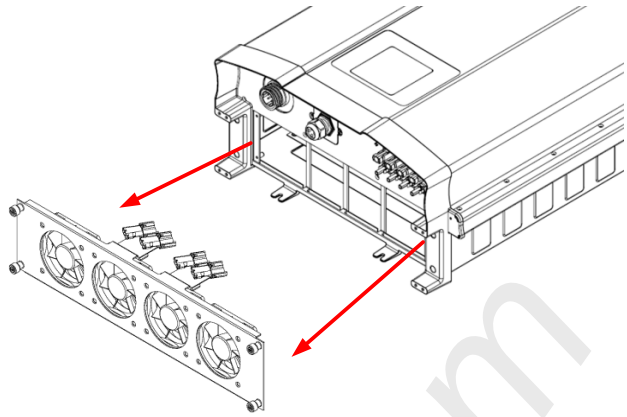

Figure 8-2 disassembling fan overview

8.2 Replace Fan

In the event that a fan needs to be replaced, user should disassemble the 4 pcs screws around the fans and disconnect the connector right behind the fan bracket. Then replace new fan and reassemble the 4pcs screws.

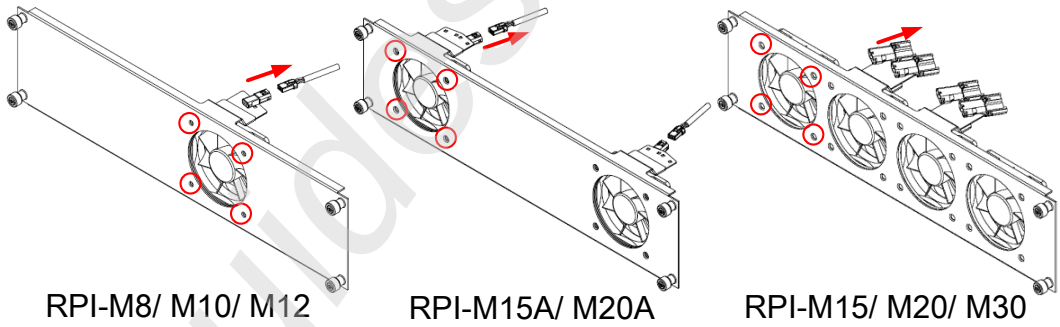

Figure 8-3 Disassembling fan

8.3 Clean Air Outlets

Disassembling the 4 screws of air outlet and cleaning it should be done regularly.

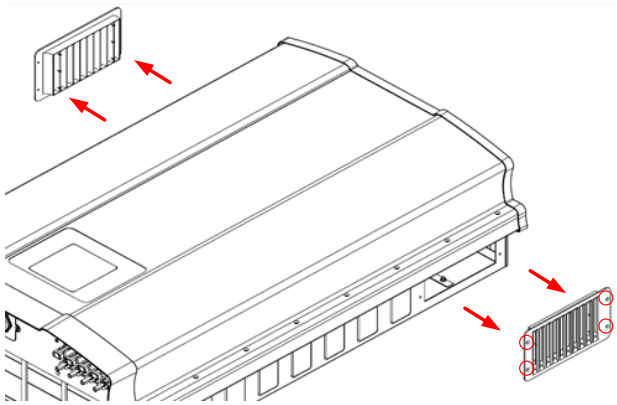

Figure 8-4 Disassembling air outlets

All manuals and user guides at all-guides.com

9. Measurement, Error message and Trouble Shooting

9.1 Measurement

Table 9-1 Measurement and message

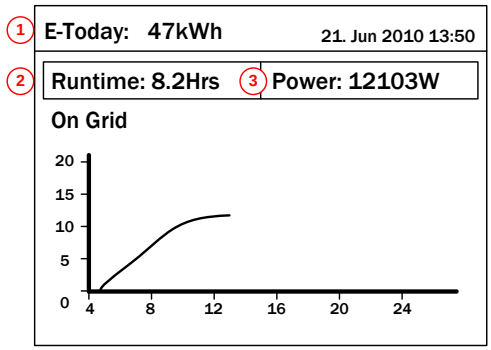

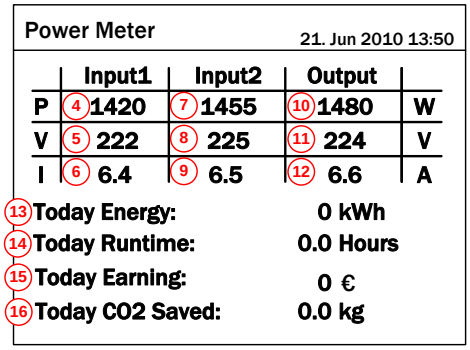

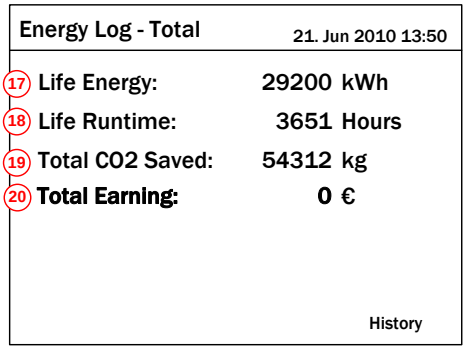

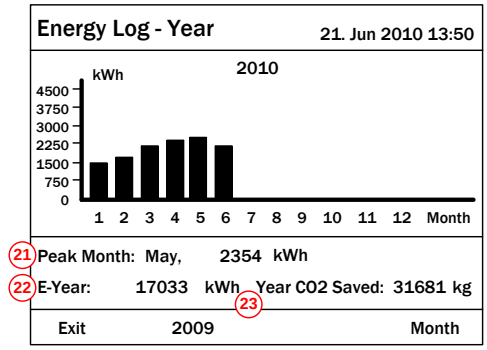

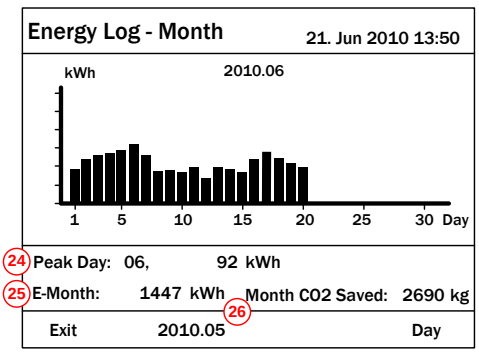

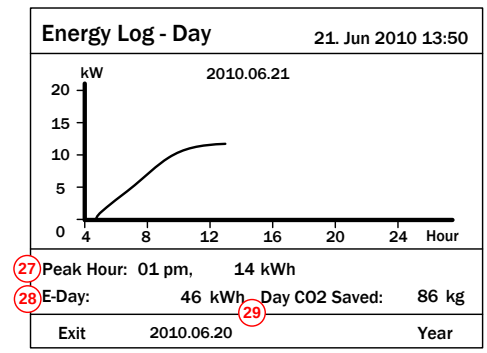

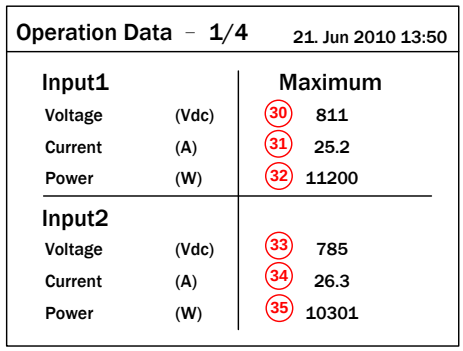

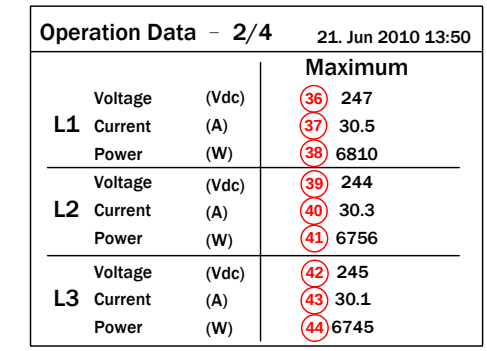

All manuals and user guides at all-guides.com

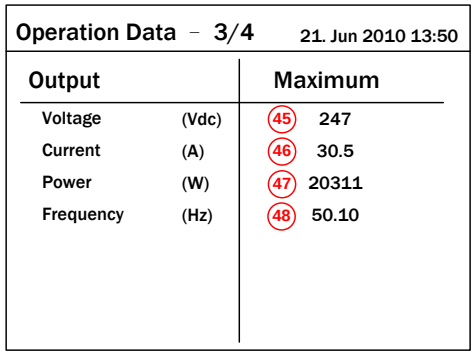

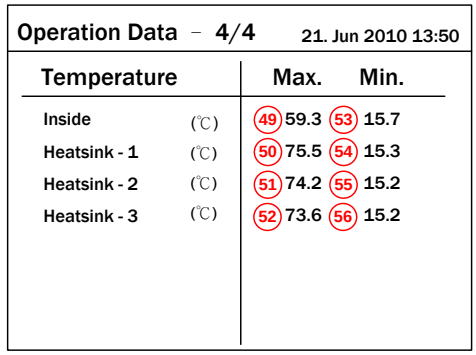

No.	Measurement	Meaning
1	E-Today	Total energy generated today
2	Runtime	Operation time today
3	Power	Actual power is generating
4	Input1 - P	Power of DC Input1
5	Input1 - V	Voltage of DC Input1
6	Input1 - I	Current of DC Input1
7	Input2 - P	Power of DC Input2
8	Input2 - V	Voltage of DC Input2
9	Input2 - I	Current of DC Input2
10	Output - P	Power of AC output
11	Output- V	Voltage of AC output
12	Output- I	Current of AC output
13	Today Energy	Accumulate electricity generated today
14	Today Runtime	Accumulated operation time today
15	Today Earning	Accumulated dollars amount earned today
16	Today co2 saved	Accumulated CO2 emission retrenched today
17	Life Energy	Total energy generated to present time
18	Life Runtime	Accumulated operation time to present time
19	Total co2 saved	Accumulated CO2 emission retrenched to present time
20	Total Earning	Accumulated the total amount of money earned
21	Peak Month	The maximum energy generated of one month in that year.
22	E-Year	Total energy generated in that year
23	Year CO2 saved	Accumulated CO2 emission retrenched in that year
24	Peak Day	The maximum energy generated of one day in that month

All manuals and user guides at all-guides.com

25	E-Month	Total energy generated in that month
26	Month CO2 saved	Accumulated CO2 emission retrenched in that month
27	Peak Hour	The maximum energy generated of one hour in that day
28	E-Day	Total energy generated in that day
29	Day CO2 saved	Accumulated CO2 emission retrenched in that day
30	Input1 Voltage Maximum	The maximum DC Input1 voltage from history
31	Input1 Current Maximum	The maximum DC Input1 current from history
32	Input1 Power Maximum	The maximum DC Input1 power from history
33	Input2 Voltage Maximum	The maximum DC Input2 voltage from history
34	Input2 Current Maximum	The maximum DC Input2 current from history
35	Input2 Power Maximum	The maximum DC Input2 power from history
36	L1 Voltage Maximum	The maximum L1 phase voltage from history
37	L1 Current Maximum	The maximum L1 phase current from history
38	L1 Power Maximum	The maximum L1 phase power from history
39	L2 Voltage Maximum	The maximum L2 phase voltage from history
40	L2 Current Maximum	The maximum L2 phase current from history
41	L2 Power Maximum	The maximum L2 phase power from history
42	L3 Voltage Maximum	The maximum L3 phase voltage from history
43	L3 Current Maximum	The maximum L3 phase current from history
44	L3 Power Maximum	The maximum L3 phase power from history
45	Output Voltage Maximum	The maximum Grid voltage from history
46	Output Current Maximum	The maximum output current from history
47	Output Power Maximum	The maximum output power from history
48	Output Frequency Maximum	The maximum Grid frequency from history
49	Inside Max.	The maximum inverter inner temperature value
50	Heatsink-1 Max.	The maximum Heatsink-1 temperature value
51	Heatsink-2 Max.	The maximum Heatsink-2 temperature value
52	Heatsink-3 Max.	The maximum Heatsink-3 temperature value
53	Inside Min.	The minimum inverter inner temperature value
54	Heatsink-1 Min.	The minimum Heatsink-1 temperature value
55	Heatsink-2 Min.	The minimum Heatsink-2 temperature value
56	Heatsink-3 Min.	The minimum Heatsink-3 temperature value

All manuals and user guides at all-guides.com

9.2 Error Message & Trouble Shooting

Table 9-2 Error Message

ERROR		
Message	**Possible cause**	**Action**
AC Freq High	1. Actual utility frequency is over the OFR setting 2. Incorrect country setting 3. Detection circuit malfunction	1. Check the utility frequency on the inverter terminal 2. Check country setting 3. Check the detection circuit inside the inverter
AC Freq Low	1. Actual utility frequency is under the UFR setting 2. Incorrect country or Grid setting 3. Detection circuit malfunction	1. Check the utility frequency on the inverter terminal 2. Check country & Grid setting 3. Check the detection circuit inside the inverter
Grid Quality	Non-linear load in Grid and near to inverter	Grid connection of inverter need to be far away fromnon-linear load if necessary
HW Connect Fail	1. Wrong connection in AC plug 2. Detection circuit malfunction	1. Check the AC connection, must accords to manual 2. Check the detection circuit inside the inverter
No Grid	1. AC breaker is OFF 2. Disconnect in AC plug	1. Switch on AC breaker 2. Check the connection in AC plug and make sure it connects to inverter
AC Volt Low	1. Actual utility voltage is under the UVR setting 2. Incorrect country or Grid setting 3. Wrong connections in AC plug 4. One or more internal fuses are broken 5. Detection circuit malfunction	1. Check the utility voltage connection to the inverter terminal 2. Check country & Grid setting 3. Check the connection in AC plug 4. Replace fuses (FUC1-3) and check all switching devices in boost & inverter stages 5. Check the detection circuit inside the inverter
AC Volt High	1. Actual utility voltage is over the OVR setting 2. Utility voltage is over the Slow OVR setting during operation 3. Incorrect country or Grid setting 4. Detection circuit malfunction	1. Check the utility voltage on the inverter terminal 2. Check the utility voltage on the inverter terminal 3. Check country & Grid setting 4. Check the detection circuit inside the inverter

All manuals and user guides at all-guides.com

Solar1 High	1. Actual Solar1 voltage is over 1000Vdc 2. Detection circuit malfunction	1. Modify the solar array setting, and make the Voc less than 1000Vdc 2. Check the detection circuit inside the inverter
Solar2 High	1. Actual Solar2 voltage is over 1000Vdc 2. Detection circuit malfunction	1. Modify the solar array setting, and make the Voc less than 1000Vdc 2. Check the detection circuit inside the inverter
Insulation	1. PV array insulation fault 2. Large PV array capacitance between Plus to Ground or Minus to Ground or both. 3. Detection circuit malfunction	1. Check the insulation of Solar inputs 2. Check the capacitance, dry PV panel if necessary 3. Check the detection circuit inside the inverter

Table 9-3 Warning Message

Warning		
Message	**Possible cause**	**Action**
Solar1 Low	1. Actual Solar1 voltage is under the limit 2. Some devices were damaged inside the inverter if the actual Solar1 voltage is close to "0" 3. Detection circuit malfunction	1. Check the Solar1 voltage connection to the inverter terminal 2. Check all switching devices in boost1 3. Check the detection circuit inside the inverter
Solar2 Low	1. Actual Solar2 voltage is under the limit 2. Some devices were damaged inside the inverter if the actual Solar2 voltage is close to "0" 3. Detection circuit malfunction	1. Check the Solar2 voltage connection to the inverter terminal 2. Check all switching devices in boost2 3. Check the detection circuit inside the inverter
HW FAN	1. One or more fans are locked 2. One or more fans are defective 3. One ore more fans are disconnected 3. Detection circuit malfunction	1. Remove the object that stuck in the fan(s) 2. Replace the defective fan(s) 3. Check the connections of all fans 4. Check the detection circuit inside the inverter

All manuals and user guides at all-guides.com

Table 9-4 Fault Message

FAULT		
Message	**Possible cause**	**Action**
HW DC Injection	1. Utility waveform is abnormal 2. Detection circuit malfunction	1. Check the utility waveform. Grid connection of inverter need to be far away from non-linear load if necessary 2. Check the detection circuit inside the inverter
Temperature High	1. The ambient is over 60℃ (The installation is abnormal) 2. Detection circuit malfunction	1. Check the installation ambient and environment 2. Check the detection circuit inside the inverter
HW NTC1 Fail	1. Ambient temperature >90℃ or <-30℃ 2. Detection circuit malfunction	1. Check the installation ambient and environment 2. Check the detection circuit inside the inverter (RTM1)
Temperature Low	1. Ambient temperature is <-30℃ 2. Detection circuit malfunction	1. Check the installation ambient and environment 2. Check the detection circuit inside the inverter (RTM1, RTB1, RTG1 and RTH1)
HW NTC2 Fail	1. Ambient temperature >90℃ or <-30℃ 2. Detection circuit malfunction	1. Check the installation ambient and environment 2. Check the detection circuit inside the inverter (RTB1)
HW NTC3 Fail	1. Ambient temperature >90℃ or <-30℃ 2. Detection circuit malfunction	1. Check the installation ambient and environment 2. Check the detection circuit inside the inverter (RTG1)
HW NTC4 Fail	1. Ambient temperature >90℃ or <-30℃ 2. Detection circuit malfunction	1. Check the installation ambient and environment 2. Check the detection circuit inside the inverter (RTH1)
HW DSP ADC1	1. Insufficient input power 2. Auxiliary power circuitry malfunction 3. Detection circuit malfunction	1. Check the input voltage, must > 150Vdc 2. Check the auxiliary circuitry inside the inverter 3. Check the detection circuit inside the inverter
HW DSP ADC2	1. Insufficient input power 2. Auxiliary power circuitry malfunction 3. Detection circuit malfunction	1. Check the input voltage, must > 150Vdc 2. Check the auxiliary circuitry inside the inverter 3. Check the detection circuit inside the inverter

All manuals and user guides at all-guides.com

HW DSP ADC3	1. Insufficient input power 2. Auxiliary power circuitry malfunction 3. Detection circuit malfunction	1. Check the input voltage, must > 150Vdc 2. Check the auxiliary circuitry inside the inverter 3. Check the detection circuit inside the inverter
HW Red ADC1	1. Insufficient input power 2. Auxiliary power circuitry malfunction 3. Detection circuit malfunction	1. Check the input voltage, must > 150Vdc 2. Check the auxiliary circuitry inside the inverter 3. Check the detection circuit inside the inverter
HW Red ADC2	1. Insufficient input power 2. Auxiliary power circuitry malfunction 3. Detection circuit malfunction	1. Check the input voltage, must > 150Vdc 2. Check the auxiliary circuitry inside the inverter 3. Check the detection circuit inside the inverter
HW Efficiency	1. The calibration is incorrect 2. Current feedback circuit is defective	1. Check the accuracy of current and power 2. Check the current feedback circuit inside the inverter
HW COMM2	1. Red. CPU is idling 2. The communication connection is disconnected	1. Check reset and crystal in Red. CPU 2. Check the connection between Red. CPU and DSp
HW COMM1	1. DSP is idling 2. The communication connection is disconnected 3. The communication circuit malfunction	1. Check reset and crystal in DSP 2. Check the connection between DSP and COMM 3. Check the communication circuit
Ground Current	1. PV array insulation fault 2. Large PV array capacitance between Plus to Ground or Minus to Ground 3. Either side of boost driver or boost choke malfunction 4. Detection circuit malfunction	1. Check the insulation of Solar inputs 2. Check the capacitance (+ <-> GND & - <-> GND), must < 2.5uF. Install a external transformer if necessary 3. Check boost driver & boost choke 4. Check the detection circuit inside the inverter
HW Connect Fail	1. Power line is disconnected inside the inverter 2. Current feedback circuit is defective	1. Check the power lines inside the inverter 2. Check the current feedback circuit inside the inverter
RCMU Fail	1. RCMU is disconnected 2. Detection circuit malfunction	1. Check the RCMU connection inside the inverter 2. Check the detection circuit inside the inverter

All manuals and user guides at all-guides.com

Relay Test Short	1. One or more relays are sticking 2. The driver circuit for the relay malfunction	1. Replace the defective relay(s) 2. Check the driver circuit inside the inverter
Relay Test Open	1. One or more relays are abnormal 2. The driver circuit for the relay malfunction 3. The detection accuracy is not correct for Vgrid and Vout	1. Replace the defective relay(s) 2. Check the driver circuit inside the inverter 3. Check the Vgrid and Vout voltage detection accuracy
Bus Unbalance	1. Not totally independent or parallel between inputs 2. PV Array short to Ground 3. Driver for boost is defective or disconnected 4. Detection circuit malfunction	1. Check the inputs connections 2. Check the PV Array insulation 3. Check the driver circuit for boost inside the inverter 4. Check the detection circuit inside the inverter
HW Bus OVR	1. Driver for boost is defective 2. Voc of PV array is over 1000Vdc 3. Surge occurs during operation 4. Detection circuit malfunction	1. Check the driver circuit for boost inside the inverter 2. Modify the solar array setting, and make the Voc less than 1000Vdc 3. N/A 4. Check the detection circuit inside the inverter
AC Current High	1. Surge occurs during operation 2. Driver for inverter stage is defective 3. Switching device is defective 4. Detection circuit malfunction	1. N/A 2. Check the driver circuit in inverter stage 3. Check all switching devices in inverter stage 4. Check the detect circuit inside the inverter
HW CT A Fail	1. Test current loop is broken 2. CSC1 is defective 3. Detection circuit malfunction	1. Check the connection of WC3 to CNC16 2. Replay CSC1 with new one 3. Check the detection circuit inside the inverter
HW CT B Fail	1. Test current loop is broken 2. CSC2 is defective 3. Detection circuit malfunction	1. Check the connection of WC3 to CNC16 2. Replace CSC2 with new one 3. Check the detection circuit inside the inverter
HW CT C Fail	1. Test current loop is broken 2. CSC3 is defective 3. Detection circuit malfunction	1. Check the connection of WC3 to CNC16 2. Replace CSC3 with new one 3. Check the detection circuit inside the inverter

All manuals and user guides at all-guides.com

HW AC OCR	1. Large Grid harmonics 2. Switching device is defective 3. Detection circuit malfunction	1. Check the utility waveform. Grid connection of inverter need to be far away from non-linear load if necessary 2. Check all switching devices in inverter stage 3. Check the detection circuit inside the inverter
HW ZC Fail	The detection circuit for synchronal signal malfunction	Check the detection circuit for synchronal signal inside the inverter
DC Current High	1. Switching device in boost is defective 2. Driver for boost is defective 3. Input current detection circuit malfunction	1. Check all switching device in boost 2. Check the driver curcuit for boost inside the inverter 3. Check input current detection circuit

All manuals and user guides at all-guides.com

10. De-Commissioning

10.1 De-Commissioning Procedure

If it is necessary to put the device out of operation for maintenance and/or storage, please follow the instructions below.



WARNING！

To avoid injuries, please follow the procedures:

- Switch off AC circuit breaker to disconnect with electricity grid.
- Switch off DC switch to disconnect with DC source.
- Switch off the PV array switch to disconnect from the PV array.
- Use proper voltage meter to confirm that the AC and DC power are disconnected from the unit.
- Remove the AC wiring immediately to completely disconnect from electricity grid.
- Remove the DC wiring to disconnect from PV Array.
- Remove the communication module RS-485 connection from the computer connection.
- After completing the above steps, the inverter can be removed.

all-guides.com

All manuals and user guides at all-guides.com

11. Technical Data

11.1 Specification

Table 11-1 Specification for RPI-M8/ M10/ M12

	RPI-M8	RPI-M10	RPI-M12
GENERAL			
Enclosure	Powder coated aluminum		
Operating temperature	-20~60℃, full power up to 40℃		
Operating Altitude	2000 m		
Relative humidity	0 – 100% non-condensing.		
Environmental category	Outdoor, wet locations		
Protection degree	IP65 (Electronics)		
Pollution degree	II		
Overvoltage category	AC output :III, DC Input :II		
Maximum backfeed current to the array	0		
Galvanic isolation	NO		
Safety class	Class I metal enclosure with protective earth		
Weight	40kg	40kg	40kg
Dimensions	625 × 612 × 278 mm		
Connectors	Weather resistant connectors		
DC INPUT (Solar side)			
Maximum input power	9kW	11kW	13.2kW
Recommended PV power range	7kW–10.5kW	8.8kW–13.2kW	10.5kW– 15.5kW
Nominal voltage	635Vdc		
Operating voltage	200Vdc – 1000 Vdc		
Startup voltage	> 250 Vdc		
Start up power	40W		
MPP tracker	Parallel inputs: 1 MPP tracker Separate inputs: 2 MPP trackers		
Absolute maximum voltage	1000Vdc		
MPPT range at Nominal Power			
Balanced inputs (50/50)	280~850 Vdc	350~850 Vdc	420~850 Vdc
Unbalanced inputs (67)	330~850 Vdc	350~850 Vdc	420~850 Vdc
Unbalanced inputs (33)	280~850 Vdc	350~850 Vdc	420~850 Vdc
Number of inputs	4 pairs MC4		
Rated current	Each MPPT: 17A Total: 30A	Each MPPT: 20A Total: 30A	Each MPPT: 20A Total: 30A

All manuals and user guides at all-guides.com

Maximum short circuit current per MPPT (Isc)	24 A	24 A	24 A
AC OUTPUT (GRID SIDE)			
Nominal power	8kVA	10kVA	12kVA
Maximum power	8.4kVA	10.5kVA	12.6kVA
Voltage	3Ph, 230/400Vac (3phase / N / PE)		
Nominal current	11.6 A	14.5 A	17.4A
Maximum current	12.8 A	16 A	19.2 A
Inrush current	150A/100μs	150A/100μs	150A/100μs
Maximum output fault current (rms)	22 A	22 A	22 A
Maximum output overcurrent protection	16 A	20 A	25 A
Frequency	50 Hz model: 47 – 53 Hz 60 Hz model: 57 – 63 Hz		
Total harmonic distortion	< 3 %		
Power factor	> 0.99 @ full power Adjustable: 0.80 leading – 0.80 lagging		
DC current injection	<0.5% rated current		
Tare loss	<2 W		
Maximum efficiency	98.2%	98.3%	98.3%
EU efficiency	97.4%	97.7%	97.7%
AC connector	3 Ph + N + PE; 3-phase AC plug that meets IP67 and specifications in table 5-2.		
Fuse	N/A. Please connect to an external protection device (1.25 rated current)		
SYSTEM INFORMATION / COMMUNICATION			
User interface	Black-on-white graphical LCD display		
	365 days data logger and real time clock		
	30 events record		
Externalcommunication	2 RS-485 connections		

All manuals and user guides at all-guides.com

REGULATIONS & DIRECTIVES				
CE conformity		Yes		
Grid interface		VDE0126-1-1, VDE-AR-N 4105, RD1699, CEI 0-21		
Emission		EN 61000-6-3		
Harmonics		EN 61000-3-2		EN 61000-3-12
Variations and flicker		EN 61000-3-3		EN 61000-3-11
Immunity		EN 61000-6-2		
Immunity	ESD	IEC 61000-4-2		
	RS	IEC 61000-4-3		
	EFT	IEC 61000-4-4		
	Surge	IEC 61000-4-5		
	CS	IEC 61000-4-6		
	PFMF	IEC 61000-4-8		
Electrical safety		IEC 62109-1/ -2		
MISCELLANEOUS				
Cooling		Fan, 1pcs	Fan, 1pcs	Fan, 1pcs
Enclosure		Mounting bracket		
		Aluminum with powder coating		

All manuals and user guides at all-guides.com

Table 11-2 Specification for RPI-M15/ M20/ M30

	RPI-M15	RPI-M20	RPI-M30
GENERAL			
Enclosure	Powder coated aluminum		
Operating temperature	-20~60℃, full power up to 40℃		
Operating Altitude	2000 m		
Relative humidity	0 – 100% non condensing.		
Environmental category	Outdoor, wet locations		
Protection degree	IP65 (Electronics)		
Pollution degree	II		
Overvoltage category	AC output :III, DC Input :II		
Maximum backfeed current to the array	0		
Galvanic isolation	NO		
Safety class	Class I metal enclosure with protective earth		
Weight	67.2kg	67.2kg	72.2kg
Dimensions	960 × 612 × 278 mm		
Connectors	Weather resistant connectors		
DC INPUT (Solar side)			
Maximum input power	16.5kW	22 kW	33kW
Recommended PV power range	14kW – 19kW	18kW – 25kW	26kW – 38kW
Nominal voltage	650Vdc		
Operating voltage	200Vdc – 1000 Vdc		
Startup voltage	> 250 Vdc		
Start up power	40W		
MPP tracker	Parallel inputs: 1 MPP tracker Separate inputs: 2 MPP trackers		
Absolute maximum voltage	1000V		
Maximum power MPPT range			
Balanced inputs (50/50)	350-800Vdc	350-800Vdc	480-800Vdc
Unbalanced inputs (33/67)	470-800Vdc	480-800Vdc	620-800Vdc
Number of inputs	4 pairs MC4		6 pairs MC4
Rated current	24 A * 2	30A * 2	34 A * 2
Maximum short circuit current per MPPT(Isc)	24 A	30 A	34 A

All manuals and user guides at all-guides.com

AC OUTPUT (GRID SIDE)			
Nominal power	15kVA	20kVA	30kVA
Maximum power	16kVA	21kVA	30kVA
Voltage	3Ph, 230/400Vac		
Nominal current	22 A	29A	43 A
Maximum current	25 A	32 A	46 A
Inrush current	150A/100μs	150A/100μs	150A/100μs
Maximum output fault current (rms)	21.8 A	21.8 A	21.8 A
Maximum output over current protection	32 A	40 A	58 A
Frequency	50 Hz models: 47 – 53 Hz 60 Hz models: 57 – 63 Hz		
Total harmonic distortion	< 3 %		
Power factor	> 0.99 @ full power Adjustable: 0.80 leading – 0.80 lagging		
DC current injection	<0.5% rated current		
Tare loss	<2 W		
Maximum efficiency	98.2 %		
EU efficiency	> 97.5 %		
AC connector	3 Ph + N + PE; 3-phase AC plug that meets IP67 and specifications in table 5-2.		
Fuse	N/A. Please connect to an external protection device (1.25 rated current)		
SYSTEM INFORMATION / COMMUNICATION			
User interface	Black-on-white graphical LCD display		
	365 days data logger and real time clock		
	30 events record		
Externalcommunication	2 RS-485 connections		

all-guides.com

All manuals and user guides at all-guides.com

REGULATIONS & DIRECTIVES		
CE conformity		Yes
Grid interface		VDE0126-1-1, VDE-AR-N 4105, RD1699, CEI 0-21
Emission		EN 61000-6-3
Harmonics		EN 61000-3-12
Variations and flicker		EN 61000-3-11
Immunity		EN 61000-6-2
Immunity	ESD	IEC 61000-4-2
	RS	IEC 61000-4-3
	EFT	IEC 61000-4-4
	Surge	IEC 61000-4-5
	CS	IEC 61000-4-6
	PFMF	IEC 61000-4-8
Electrical safety		IEC 62109-1/ -2
MISCELLANEOUS		
Cooling		Fan, 4pcs
Enclosure		Mounting bracket
		Aluminum with powder coating

All manuals and user guides at all-guides.com

Table 11-3 Specification for RPI-M15A/ M20A

	RPI-M15A	RPI-M20A
GENERAL		
Enclosure	Powder coated aluminum	
Operating temperature	-25~60℃, full power up to 40℃	
Operating Altitude	2000 m	
Relative humidity	0 – 100% non condensing.	
Environmental category	Outdoor, wet locations	
Protection degree	IP65 (Electronics)	
Pollution degree	II	
Overvoltage category	AC output :III, DC Input :II	
Maximum backfeed current to the array	0	
Galvanic isolation	NO	
Safety class	Class I metal enclosure with protective earth	
Weight	43kg	43kg
Dimensions	625 × 612 × 278 mm	
Connectors	Weather resistant connectors	
DC INPUT (Solar side)		
Maximum input power	16.5kW	22 kW
Recommended PV power range	14kW – 19kW	18kW – 25kW
Nominal voltage	635Vdc	
Operating voltage	200Vdc – 1000 Vdc	
Startup voltage	> 250 Vdc	
Start up power	40W	
MPP tracker	Parallel inputs: 1 MPP tracker Separate inputs: 2 MPP trackers	
Absolute maximum voltage	1000V	
Maximum power MPPT range		
Balanced inputs (50/50)	355-820Vdc	470-820Vdc
Unbalanced inputs (67)	475-820Vdc	635-820Vdc
Unbalanced inputs (33)	235-820Vdc	310-820Vdc
Number of inputs	4 pairs MC4	
Rated current	22 A * 2	22 A * 2
Maximum short circuit current per MPPT (Isc)	24 A	24 A

All manuals and user guides at all-guides.com

AC OUTPUT (GRID SIDE)		
Nominal power	15kVA	20kVA
Maximum power	15.75kVA	21kVA
Voltage	3Ph, 230/400Vac	
Nominal current	22 A	29 A
Maximum current	24 A	32 A
Inrush current	150A/100μs	150A/100μs
Maximum output fault current (rms)	22 A	22 A
Maximum output over current protection	30 A	40 A
Frequency	50 Hz models: 47 – 53 Hz 60 Hz models: 57 – 63 Hz	
Total harmonic distortion	< 3 %	
Power factor	> 0.99 @ full power Adjustable: 0.80 leading – 0.80 lagging	
DC current injection	<0.5% rated current	
Tare loss	<2 W	
Maximum efficiency	98.3 %	98.4 %
EU efficiency	97.9 %	98.1 %
AC connector	3 Ph + N + PE; 3-phase AC plug that meets IP67 and specifications in table 5-2.	
Fuse	N/A. Please connect to an external protection device (1.25 rated current)	
SYSTEM INFORMATION / COMMUNICATION		
User interface	Black-on-white graphical LCD display	
	365 days data logger and real time clock	
	30 events record	
Externalcommunication	2 RS-485 connections	

All manuals and user guides at all-guides.com

REGULATIONS & DIRECTIVES		
CE conformity		Yes
Grid interface		VDE0126-1-1, VDE-AR-N 4105, RD1699, CEI 0-21
Emission		EN 61000-6-3
Harmonics		EN 61000-3-12
Variations and flicker		EN 61000-3-11
Immunity		EN 61000-6-2
Immunity	ESD	IEC 61000-4-2
	RS	IEC 61000-4-3
	EFT	IEC 61000-4-4
	Surge	IEC 61000-4-5
	CS	IEC 61000-4-6
	PFMF	IEC 61000-4-8
Electrical safety		IEC 62109-1/ -2
MISCELLANEOUS		
Cooling		Fan, 2pcs
Enclosure		Mounting bracket
		Aluminum with powder coating

All manuals and user guides at all-guides.com



www.deltaww.com

all-guides.com