

KACO new energy.

blueplanet gridsave backup 100
blueplanet gridsave backup 120
blueplanet gridsave backup 150
blueplanet gridsave backup 165
blueplanet gridsave HV 100
blueplanet gridsave HV 120
blueplanet gridsave HV 150
blueplanet gridsave HV 165

M; L; XL

Manual

■English translation of German original

⚠ Authorised electrician

Important safety instructions

These instructions form part of the product and must be carefully read, observed and stored in a place which is freely accessible at all times.

EN

Legal provisions

The information contained in this document is the property of KACO new energy GmbH. Publication, in whole or in part, requires the written consent of KACO new energy GmbH.

Warranty conditions

As a system integrator, you can view the applicable warranty conditions of KACO new energy GmbH.

Definitions of product designations

For ease of reading, this Manual refers to the products “battery inverter” & “Grid-tied battery inverter with backup function” as the device or device with backup, respectively.

Trademarks

All trademarks are acknowledged, even if they are not specifically identified as such. The absence of such identification does not mean that a product or trademark is freely available for use.

Software

This device contains open source software that has been developed by third parties. The software is licensed, amongst others, under GPL and LGPL.

More details on this topic and a list of the open source software used, as well as the corresponding licence texts, can be found in the web interface information display under "Licence List".

Change history

The following table documents all changes to this document. If you have any questions about a specific version, please contact KACO customer service.

Version	Date	Modified chapters	Description of change	Approval
01	*29.10.2026*	All	Initial release	*V.D*

KACO new energy.

EN

Grid-tied battery inverter with backup function

Contents

1 General information 4
- 1.1 About this document 4
- 1.2 More information 4
- 1.3 Layout of Instructions 5
- 1.4 Target group 6
- 1.5 Identification 6
- 1.6 Warnings on the device 6

2 Safety 7
- 2.1 Intended use 8
- 2.2 Protection features 9
- 2.3 Overview of device variants 10
- 2.4 Protection against cyber attacks 11

3 Description of the device 13
- 3.1 Mode of operation 13
- 3.2 Device diagram 13
- 3.3 System layout 14

4 Technical data 16
- 4.1 Electrical data 16
- 4.2 General data 17
- 4.3 Environmental data 18
- 4.4 Accessories 19
- 4.5 Permitted and non-permitted operating modes 19

5 Transportation and Delivery 20
- 5.1 Check the equipment included 20
- 5.2 Transporting the device 20
- 5.3 Installation tool 20

6 Assembly and preparation 21
- 6.1 Choosing the installation location 21
- 6.2 Unpacking the device 22
- 6.3 Fastening the mount 23
- 6.4 Installing and securing the device 24

7 Installation 26
- 7.1 Opening the housing 26
- 7.2 Surveying the connection area 26
- 7.3 Making the electrical connection 26
- 7.4 Connecting the device to the power grid 27
- 7.5 Connecting the battery to the device 29
- 7.6 Inserting the overvoltage protection 31
- 7.7 Establishing equipotential bonding 31
- 7.8 Connecting the interfaces 32
- 7.9 Sealing the connection area 36

8 Commissioning 37
- 8.1 Requirements 37
- 8.2 Network topologies 38
- 8.3 Start-up options 38

9 Configuration and operation 41
- 9.1 Initial start-up 41
- 9.2 Signal elements 44
- 9.3 User interface 46
- 9.4 Menu structure 49
- 9.5 Monitoring the device 73
- 9.6 Performing a firmware update 74
- 9.7 Access via Modbus 75

10 Specifications 76
- 10.1 Reactive power control 76
- 10.2 Active power regulation 83
- 10.3 Dynamic grid support 91
- 10.4 Other grid-supporting functions that are effective in the case of active power 95
- 10.5 Advanced islanding detection 97

11 Maintenance and troubleshooting 98
- 11.1 Visual inspection 98
- 11.2 Routine check 98
- 11.3 Cleaning 100
- 11.4 Replacing the fan 101
- 11.5 Shutting down for maintenance 102
- 11.6 Replace DC fuse 102
- 11.7 Troubleshooting 103
- 11.8 Messages 104

12 Decommissioning and dismantling 105
- 12.1 Switching off the device 105
- 12.2 Disconnecting connections 105
- 12.3 Uninstalling the device 105
- 12.4 Removing the device 105
- 12.5 Packaging the device 106
- 12.6 Storing the device 106

13 Disposal 107

14 Service and warranty 108

15 Appendix 109
- 15.1 EU Declaration of Conformity (EN) 109

EN

1 General information

1.1 About this document



⚠ WARNING

Improper handling of the device can be hazardous!

1. You must read and understand the manual in order to install and use the device safely.

Other applicable documents

During installation, observe all assembly and installation instructions for components and other parts of the system. These instructions also apply to the equipment, related components and other parts of the system.

Some of the documents required for the registration and approval of your system are included with the manual.

English translation of German original

This document has been produced in several languages. The German-language version is the original version. All other language versions are translations of the original version.

This document is valid for the following types of device from firmware version V2.4.2 onwards

Type designation *[KACO Art. No.]* **Without backup function!**	BLUEPLANET GRIDSAVE HV 100 IIGM	[1002442]
	BLUEPLANET GRIDSAVE HV 100 IIGL	[1002443]
	BLUEPLANET GRIDSAVE HV 100 IIGXL	[1002444]
	BLUEPLANET GRIDSAVE HV 120 IIKM	[1002445]
	BLUEPLANET GRIDSAVE HV 120 IIKL	[1002446]
	BLUEPLANET GRIDSAVE HV 120 IIKXL	[1002447]
	BLUEPLANET GRIDSAVE HV 150 IIPM	[1002448]
	BLUEPLANET GRIDSAVE HV 150 IIPL	[1002449]
	BLUEPLANET GRIDSAVE HV 150 IIPXL	[1002450]
	BLUEPLANET GRIDSAVE HV 165 IIQM	[1002451]
	BLUEPLANET GRIDSAVE HV 165 IIQL	[1002452]
	BLUEPLANET GRIDSAVE HV 165 IIQXL	[1002453]
Modules *[KACO art. no.]*	BLUEPLANET GRIDSAVE BACKUP 100 IIGM	[1002350]
	BLUEPLANET GRIDSAVE BACKUP 100 IIGL	[1002351]
	BLUEPLANET GRIDSAVE BACKUP 100 IIGXL	[1002352]
	BLUEPLANET GRIDSAVE BACKUP 120 IIKM	[1002353]
	BLUEPLANET GRIDSAVE BACKUP 120 IIKL	[1002354]
	BLUEPLANET GRIDSAVE BACKUP 120 IIKXL	[1002355]
	BLUEPLANET GRIDSAVE BACKUP 150 IIPM (600V)	[1002356]
	BLUEPLANET GRIDSAVE BACKUP 150 IIPL (600V)	[1002357]
	BLUEPLANET GRIDSAVE BACKUP 150 IIPXL (600V)	[1002358]
	BLUEPLANET GRIDSAVE BACKUP 165 IIQM (660V)	[1002410]
	BLUEPLANET GRIDSAVE BACKUP 165 IIQL (660V)	[1002412]
	BLUEPLANET GRIDSAVE BACKUP 165 IIQXL (660V)	[1002413]

1.2 More information

Links to further information can be found atwww.kaco-newenergy.com

Document title	Document type
Technical data sheet	Product flyer
Extended Datasheet	Data sheet
Quickguide	Quick guide

EN

Document title	Document type
Modbus protocol	Application note (EN)
SunSpec information model reference SunSpec information model reference KACO	Excel files for software version with application note "Modbus protocol" under https://kaco-newenergy.com/downloads/
Software package	Files for current software
EU Declaration of Conformity Country-specific certificates Certificate for specific subassemblies	Certificates

1.3 Layout of Instructions

1.3.1 Symbols used

	General warning sign (ISO 7010 W001)		Fire and explosion hazard
	Electrical voltage		Burn hazard
	Grounding – protective conductor		Capacitor discharge

1.3.2 Safety warnings symbols guide



⚠ DANGER

High risk

Failure to observe this warning will lead directly to serious bodily injury or death.



⚠ WARNING

Potential risk

Failure to observe this warning may lead to serious bodily injury or death.



⚠ CAUTION

Low-risk hazard

Failure to observe this warning will lead to minor or moderate bodily injury.

⚠ CAUTION

Risk of damage to property

Failure to observe this warning will lead to property damage.

1.3.3 Additional information symbols



NOTE

Useful information and notes

Information that is important for a specific topic or objective, but that is not safety-relevant.

1.3.4 Symbols for instructions

↻ Prerequisite for use

1. Carry out the step
2. Additional action sequence

EN

⇨ Interim result of the action

⇨ End result

1.3.5 Visualisation in images & graphics

1. Item numbers with localisation lines
2. Localisation table and reference in the text to the item numbers acc. to item 1
3. Sequence of action steps with item numbers in the circle.
4. Reference in the text to the sequence of action steps.

1.4 Target group

All activities described in this document may only be performed by qualified personnel with the following qualifications:

- Knowledge of communication interfaces such as Modbus and Power Plant Controller (PPC)
- Knowledge of battery systems
- Knowledge of the Modbus specifications
- Knowledge of the SunSpec Modbus specifications
- Training in handling hazards and risks associated with the installation and operation of electrical devices and systems.
- Training in the installation and commissioning of electrical devices and systems.
- Knowledge of the applicable standards and guidelines.
- Knowledge of and compliance with this document, including all safety instructions.

NOTE: Lack of the required knowledge may result in the manufacturer's warranty becoming void. If you are unsure, contact your local KACO Service team.

1.5 Identification

For service and other device-specific requirements, the nameplate is located on the right side of the product and contains the following information:

- Product name
- Part number
- Serial number
- Date of manufacture
- Technical data
- Disposal information
- Certification marking, CE marking.



Fig. 1: Nameplate

1.6 Warnings on the device

A warning label is attached to the device. Read the warnings carefully.

Do not remove this label. If the label is missing or illegible, please contact a KACO representative or dealer.

- Item number: 3013153

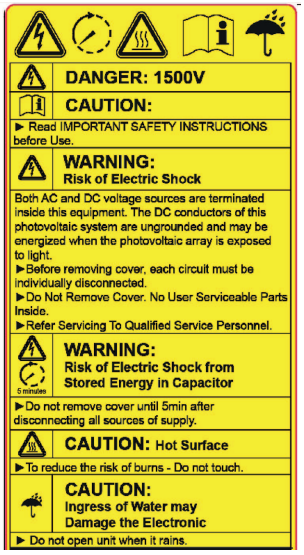

Fig. 2: Warning sticker

EN

2 Safety



⚠ DANGER

Lethal voltages are still present in the connections and cables of the device even after the device has been switched off and disconnected!

If the load on the DC side is disconnected (e.g. by shutting down the battery), the device does not shut down. DC voltage is still present at the connections. Severe injuries or death may occur if the cables and/or terminals/busbars in the device are touched.

1. Comply with all safety regulations and current technical connection specifications of the responsible power supply company.
2. The device is only permitted to be opened and serviced by a qualified electrician.
3. Switch off the grid voltage by turning off the external circuit breakers.
4. Check that all AC and DC cables are completely free of current using a clip-on ammeter.
5. For work on the device, ensure complete isolation from the power supply on the AC and DC connections.
6. Do not touch the cables and/or terminals/busbars when switching the device on and off.
7. An AC- and DC- disconnecter unit must be provided during the final installation stage.
8. Do not make any modifications to the device.
9. Keep the device closed when in operation.



⚠ DANGER

Life-threatening voltage due to the formation of an island grid during backup operation!

During backup operation, the device can form a local island grid and energize external cables, even if the public grid has failed or has been disconnected. Without the external components specified in the chapter [See section 2.1 Page 8] (grid disconnector I, grid disconnector II, N-PE bonding contactor), safe isolation from the public grid is **not** guaranteed. Third parties (e.g. utility personnel) may mistakenly assume that a cable believed to be de-energized is safe.

1. Only put backup operation into service with all external components [See section 3.3 Page 14] fully installed and operational.
2. Before working on external cables believed to be de-energized: Verify the absence of voltage by measurement, regardless of the reported grid status.
3. Before carrying out any work on the device, particularly maintenance work, disconnect all poles of the AC grid connection and the battery (DC) and verify the absence of voltage. For versions L/XL, also disconnect the external 24 V DC power supply to the PCU. The device does not indicate its current operating mode (e.g. island operation). Voltage may therefore still be present even when the grid is disconnected.
4. Inform the grid operator of the system's backup/island operation capability if required by local regulations.

The electrician is responsible for observing all existing standards and regulations. The following applies:

- Keep unauthorised persons away from the device and/or system.
- Ensure operational safety by providing proper grounding, conductor dimensioning and appropriate protection against short circuiting.
- Observe the safety instructions on the product and in this manual.
- Switch off all voltage sources and secure them against being inadvertently switched back on before performing visual inspections and maintenance.
- When taking measurements on the live device:
  - Do not touch the electrical connections
  - Remove all jewellery from wrists and fingers
  - Ensure that the testing equipment is in safe operating condition.
- Modifications to the surroundings of the device must comply with the applicable national and local standards.
- When working on the battery, it is also necessary to switch off the DC voltage with the DC isolator switch in addition to disconnection from the grid.

EN

⚠ CAUTION

Damage to the device from electrostatic discharge

Components inside the device can be damaged beyond repair by static discharge.

1. Observe the ESD protective measures.
2. Earth yourself before touching a component by touching a grounded object.

2.1 Intended use

The device was developed for use with a battery storage system. The device converts the DC voltage supplied by the battery into AC voltage, enabling power to be fed into the grid or the battery to be charged. The device has been designed and manufactured in accordance with the latest technological standards and recognized safety regulations.

In **grid parallel operation**, the device operates in grid-following mode on the public grid. In the event of a grid failure, the device can additionally establish a local island grid (grid-forming operation) and supply prioritised local loads for a limited period (backup function). This **backup function** expressly **does not constitute autonomous continuous standalone operation**. Backup operation must not exceed **15% of the total annual operating time**. This is not a **UPS** function.

NOTE

Distinction between blueplanet gridsave backup and gridsave HV devices:

1. **gridsave backup:** Device with backup function (grid-forming island operation in the event of a grid failure).
2. **gridsave HV:** Device without backup function – exclusively for grid-parallel operation, no island grid.
3. All information on backup/island operation in this document applies only to **gridsave backup**.

The device is intended for indoor and outdoor applications and may only be used in countries for which it has been approved or for which it has been released by KACO new energy and the grid operator. [1]

Nevertheless, improper use may endanger the life and health of the operator or third parties or cause damage to the device and other property. This applies to the following operating and connection requirements:

- Only operate the device when it is permanently connected to the public power grid.
- The grid operator's requirements must be met when connecting to the grid. Furthermore, authorization to connect to the grid may be subject to approval by the responsible authorities.
- The enclosed documentation is an integral part of the device. It must be read, observed, and kept accessible at all times.
- The operation described in the attached EU Declaration of Conformity is intended for up to 2 battery inverters per battery.
- For a DC parallel connection of more than 2 battery inverters, approval from KACO new energy is required.
- The system is only allowed to be operated with fail-safe batteries (see also TRA acceptance restriction AC-4).

The **backup function** is only available in conjunction with the following external components, whose design and integration are the responsibility of the system integrator (see Integration Manual):

- Higher-level EMS with Modbus TCP connection
- Resynchronization unit
- Grid disconnector I (Grid and system protection, isolation of the local grid from the public grid)
- Grid disconnector II (isolation of the battery system from the local grid)
- N-PE bonding contactor interlocked with grid disconnector I
- Optional: Hybrid Controller for generator operation

During backup operation, the device is temporarily disconnected from the public grid via grid disconnector I as intended; the requirement for a permanently installed connection point remains unaffected. Without the specified external components, the device operates exclusively as a grid-connected battery inverter.

Any other or extended use shall be deemed not intended and may result in the cancellation of the product warranty. This includes:

- Mobile use

[1] **WARNING! The device is not intended for use in residential areas and cannot ensure adequate protection of radio reception in such environments.**

EN

- Use in potentially explosive areas
- Use of the device in direct sunlight, rain or storm or other harsh environmental conditions
- Outdoor use outside the environmental conditions specified in [See section 4.3 Page 18]
- Operation of devices with an inconsistent performance in DC parallel operation
- Operation of devices with an inconsistent firmware version in DC parallel operation
- Operation outside the specifications defined by the manufacturer
- Overvoltage at the DC connection exceeding 1500 V
- Modification of the device
- Stand-alone continuous island operation (off-grid without planned return to grid).

The following **functional limitations** must be observed when using the device:

- No UPS function: In the event of a utility grid failure, a brief interruption of > 100 ms occurs.
- **Backup operation for temporary use only**: Continuous island operation results in increased wear and voids the warranty. Island operation is intended exclusively for temporary backup operation. Backup operation must **not exceed 15% of the total annual operating time**.
- **No contribution to restoration of the public utility grid**: The device and the energy storage system do not participate in restoration of the public utility grid. The system waits until external parties have restored the grid; only then is re-synchronization performed.

A complete overview of the permitted and prohibited operating modes can be found under: [See section 4.5 Page 19]

2.2 Protection features

The following monitoring and protection functions are integrated into the device:

- Residual current monitoring - RCMU (Residual Current Monitoring Unit) (Optionally enabled via DC parallel operation - [See section 9.1 Page 000])
- Surge arrester / Varistor for protecting the device.
- Temperature monitoring of the device
- EMC filter to protect the product against high-frequency grid interference
- Grid-side varistors to ground to protect the product against burst and surge pulses
- Anti-islanding detection in accordance with the applicable standards

NOTE

Anti-islanding detection in backup operation

Protective function in **grid-parallel operation**. It prevents the device from inadvertently feeding voltage onto a disconnected grid section following a grid failure (personal safety, system safety).

In **backup operation** this function is intentionally **deactivated**, by the EMS, since intentional island grid formation takes place in this mode. The galvanic isolation from the public grid is ensured in this case by the externally installed grid disconnector I (anti-islanding protection).

1. Both operating modes are mutually exclusive and are switched over under the control of the EMS.

NOTE

Loss of liability and warranty claims

The distinction outlined below between a conventional battery inverter and this device is relevant to liability and warranty claims:

1. Permanent, autonomous off-grid operation (off-grid operation without planned reconnection to the grid) is **not** permitted with this device. [See section 4.5 Page 19]

EN

NOTE

Application in the system network

Information on other applications / system settings (e.g. operation of multiple battery inverters) is provided on a project-specific basis in application notes. For further details, please contact our KACO sales team pv-projects.kaco.de@siemens.com.

NOTE

Overvoltage conductors / varistors influence the insulation resistance test when the device is connected

If the device is connected, the overvoltage conductors / varistors contained in the device have an impact on the electrical system insulation resistance test as per HD 60364-6 / IEC 60364-6 Low-voltage installations- Part 6: Verification.

IEC 60364-6 6.4.3.3 describes two options for this case. The first option is to disconnect devices with an overvoltage conductor or, if this is not practicable, then the test voltage can be reduced to 250 V.

2.3 Overview of device variants

Characteristic	blueplanet gridsave backup 100 – 165	blueplanet gridsave HV 100 - 165	blueplanet gridsave 92-150TL3-S
Operation on the public grid	– grid-following	– grid-following	– grid-following
Grid connection	– 3 conductors **with** N	– 3 conductors **with** N	– 3 conductors without N
Behavior in the event of a grid failure	– : Island grid formation possible.	– Shutdown (anti-islanding)	– Shutdown (anti-islanding)
Voltage and frequency control	– Independent control in backup mode (droop curves)	– Follows the grid	– Follows the grid
Anti-islanding function	– Disabled by the EMS in backup mode	– Permanently active	– Permanently active
Initial commissioning without grid connection	– Possible for the M variant (L&XL additionally require a 24 V power supply)	– Not possible	– Not possible
External components	– EMS, isolation devices – grid disconnectors I/II & N-PE bonding contactor mandatory	– Standard installation	– Standard installation
Permitted applications	– Self-consumption, peak shaving, grid services + temporary backup operation	– Self-consumption, peak shaving, grid services	– blueplanet gridsave 92-150TL3-S

Tab. 1: Comparison: Battery inverter 92-150 versus this device 100-165

EN

2.4 Protection against cyber attacks

This chapter describes the cyber-security features and responsibilities of the device over its entire life cycle. It is aimed at installers, system operators and service technicians and follows a multi-layered safety approach in accordance with IEC 62443-4-2.

Additional information can be found under [See section 8.2 Page 38] . For information on inverter OFF wiring [See section 7.8.6 Page 34].

2.4.1 Cybersecurity responsibility of users

NOTE

Before commissioning, a unique password must be created for both "Installer" and "User".

The browser should not save or cache passwords, especially for sensitive applications associated with this product.

Storing passwords in the browser poses a risk of unauthorized access and data leaks.

NOTE

Insufficiently secured remote access can allow unauthorized access to the system

This may result in manipulation, malfunctions, or loss of system integrity.

1. Use VPN connections exclusively for remote access
2. Enable multi-factor authentication (MFA) for VPN access
3. Use geo-blocking to restrict access to authorized regions
4. Always combine geo-blocking with additional security measures (e.g., MFA), as it does not provide sufficient protection on its own.
5. Follow the procedure described in the chapter [See section 9.1 Page 41] to ensure secure access.

NOTE

User's responsibility

If security measures are inadequate, the system might be compromised remotely, leading to malfunctions.

1. As a user, you are responsible for the security of the system.

Operators must ensure secure operation:

- Change standard access data immediately after start-up.
- When logging on for the first time, assign a strong password in accordance with the password policy:
  - Upper-case letters (alphabetic characters)
  - Lower-case letters (alphabetic characters)
  - Digits
  - Special characters (printable ASCII characters)
  - The minimum password length is **12 characters**, the maximum is **64 characters**.
- Restrict physical access to the inverter and connected components.
- Route the inverter OFF signal wiring through sealed housings or secured cable ducts.
- Ensure operation within a network with access protection.

2.4.2 Software & firmware updates

Only signed firmware packages from KACO new energy can be installed.

Firmware updates can be performed via:

- Web interface (Service menu -> Firmware-Update See table : Configuration via web user interface [Page 72] sowie [See section 9.6 Page 74])
- USB media (FAT32 formatted, mx. 4 GB)

EN

NOTE

Details on the software update process can be found in the corresponding application note on our web site.

Rollback and configuration protection:

- It is not possible to downgrade to any previous version. Use the See table : Configuration via web user interface [▶ Page 72] function to reset the device to the previous version.
- If an update fails, the last version of the firmware that worked remains active.
- Configuration data is retained during updates, unless otherwise stated in the release notes.

2.4.3 Logging & monitoring

The device creates local log files that can be accessed via the web interface or USB.

- The logs contain events, alarms, and security-relevant records.
- Operators should integrate device logs into their EMS to ensure continuous monitoring.

2.4.4 End-of-life and decommissioning

Before disposing of or reselling the device:

- Disconnect all communication connections.
- Reset the device to factory settings.
- Ensure environmentally responsible disposal in accordance with the WEEE Directive (2012/19/EU).

2.4.5 Cybersecurity Support

As a customer, you receive comprehensive cyber security support.

- If you discover a vulnerability or suspect a cyber security incident, please contact the P-CERT Emergency Response Team mailto:productcert@siemens.com
- **NOTE: All reports are treated in confidence and are subject to a coordinated disclosure process.**
- Subscribe to “Siemens Security Advisories (SSA)”: To keep up to date with Siemens’ security advisories, you can register for our mailing list, subscribe to our RSS feed or use our CSAF feed. If you sign up to our mailing list, you will be notified by email of any newly published or updated security advisories. If you prefer to use CSAF or RSS to keep up to date, subscribe to one of our feeds:
  - Siemens Security Advisories (CSAF)
  - Siemens Security Advisories (RSS)
  - Siemens Security Alerts and News (RSS)
- To subscribe to our mailing list, please send an email to mailto:productcert@siemens.com with the subject line “[Advisory Mailing List] Subscribe”.

EN

3 Description of the device

3.1 Mode of operation

An external EMS/PMS [2] is required to operate the device. The EMS/PMS must be provided by the customer/system integrator. Modbus TCP is the sole means of communication with the device.

The necessary commands and data points are described in the SunSpec Protocol description [See section 1.1 Page 4].

The shutdown threshold (DC-Min.) is dynamically determined by the device on the basis of the current grid voltage. After shutting down the device, it is therefore not possible to guarantee reconnection as there may be a change in the grid voltage.

Control architecture and interaction with the EMS

The device acts as the executive unit (“muscle”) of the island storage system, whilst the EMS acts as the central control (“brain”). In grid parallel operation, the EMS sends setpoints to the device and simultaneously reads its feedback. The device does not communicate directly with the generator, PV inverters or BMS – these are controlled exclusively via the EMS, as are any adaptations made as part of the resynchronisation process.

Operating modes of the device

- Grid parallel operation (on-grid): The device follows the EMS setpoints, feeds in symmetrically and keeps the phase angle identical to that of the public grid.
- Backup operation (standalone mode): The device regulates voltage and frequency independently using droop curves. External EMS setpoints are ignored in this mode; the EMS controls only the external components (generator, PV, switch).
- Black start: The device establishes the island grid in no-load status. All internal components are powered from the DC side (battery). The island formation time is > 100 ms.

NOTE: The no-load set-up of the island grid is made possible by an external mains isolator between the battery system and the local grid.

3.2 Device diagram

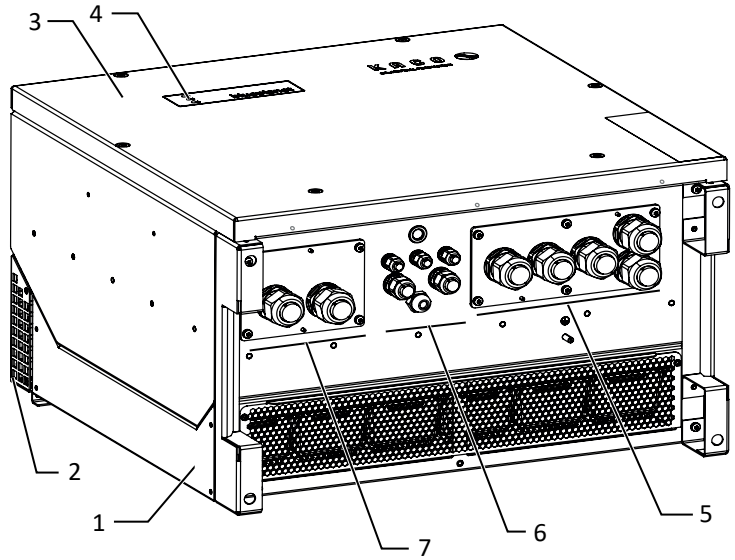

Fig. 3: Device diagram

Key

1	Housing	5	AC connection / cable feed-through
2	Cover	6	Interface / cable feed-through
3	Cover	7	DC connection / cable feed-through
4	Status indicator		

3.2.1 Electrical functions

A potential-free relay contact is integrated into the device. Use this contact for one of the following functions:

[2] Energy management system/power management system

EN

Fault signal relay

The potential-free relay contact closes as soon as there is a fault during operation. Use this function, for example, to signal a fault visually or acoustically.

3.2.2 Interfaces

You can configure the interfaces and the web server in the Settings menu. The device has the following interfaces for communication and remote monitoring:

Ethernet interface

Communication with the EMS/PMS is carried out via the Ethernet interface.

The local web server can be used to configure the device and perform updates.

3.3 System layout

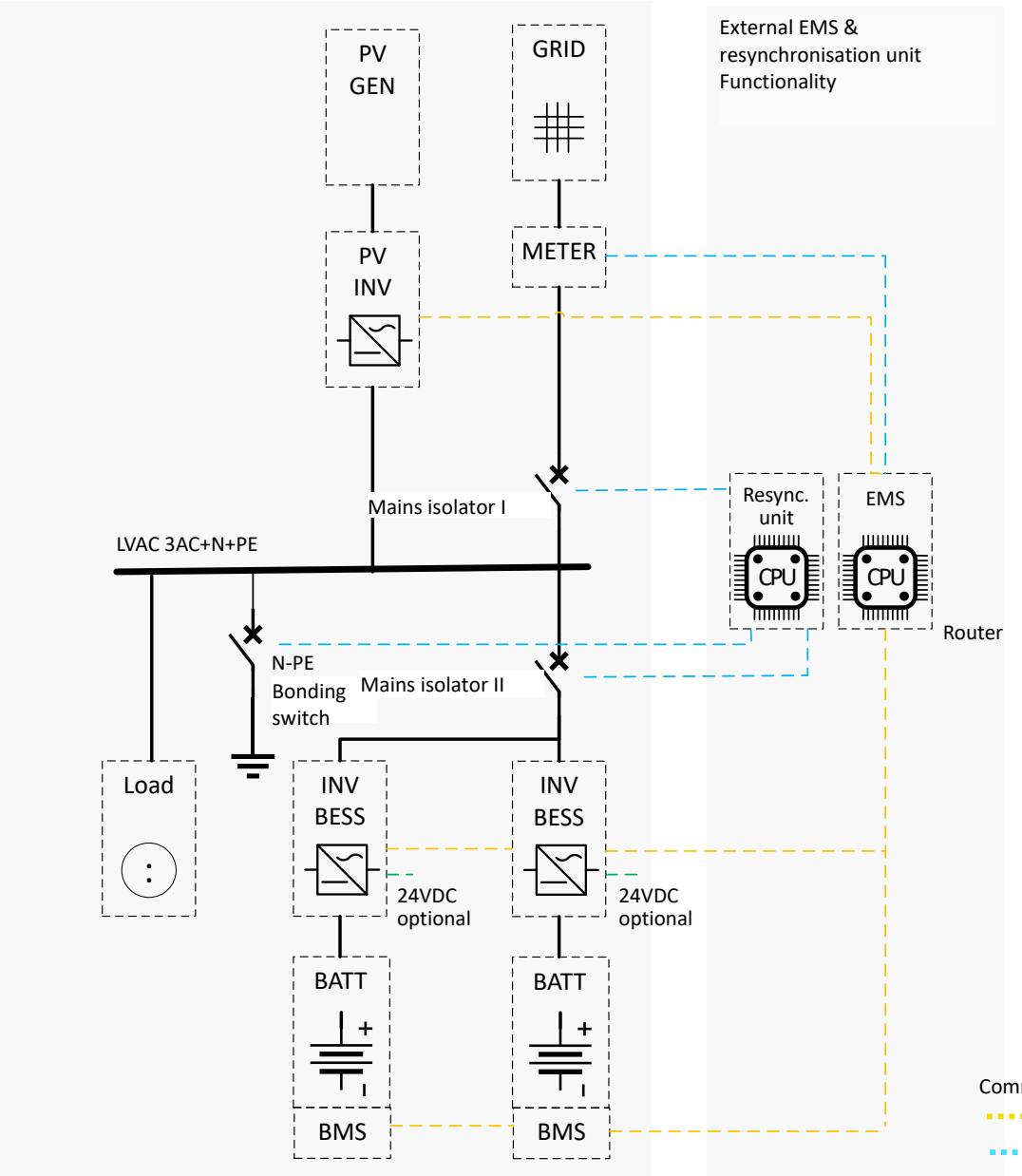

Fig. 4: Principle Schematic Diagram for a System with Two Battery Inverters with Backup Function

Component	Description.
PV generator	The PV generator converts the radiant energy of sunlight into electrical energy.
Public grid (GRID)	AC supply grid with 400 VAC / 480 VAC / 600 VAC / 660 VAC (3P, N, PE). Defines voltage and frequency during grid parallel operation.

EN

Component	Description.
PV inverter (PV INV)	Feeds the DC power from the PV generator into the local grid as AC. Can be controlled in backup operation via P(f), P(U) or direct EMS setpoints.
Energy meter (METER)	Measures the energy flow between the public grid and the local grid / EMS. Supplies measurement data to the EMS controller.
Mains isolator I	In the event of a grid failure, it disconnects the local grid from the public grid and reconnects without interruption once resynchronisation has been completed successfully.
AC busbar (LVAC 3AC+N+PE)	Local low-voltage busbar to which all AC components (load, generator, inverter) are connected.
Mains isolator II	Isolator switch between the battery system and the local grid. Enables the no-load set-up of the island grid (black start).
Load	Consumers in the local grid. Short-term power consumption (inrush current) must not exceed the inverter's nominal power
Battery inverter with backup function (INV BESS)	This device charges and discharges the battery and forms the island grid in the event of a grid failure. Connection of the battery unit to the device's DC connection.
Battery (BATT)	Intrinsically safe battery system as energy source/sink. Is charged and discharged by the device; status monitoring is carried out by the BMS.
Resync. unit	The resynchronisation unit is responsible for ensuring that the system is disconnected safely and in accordance with the requirements.
EMS controller (EMS)	Central control unit ("brain" of the system). Sends setpoints to the device via Modbus TCP/IP (SunSpec), reads out measured values and controls external components (PV INV, mains isolators I+II).

EN

4 Technical data

4.1 Electrical data

Battery input (DC)	blueplanet gs backup 100 IIQ0 & blue-planet GS HV 100 IIG0	blueplanet gs backup 120 IIQ0 & blue-planet GS HV 120 IIK0	blueplanet gs backup 150 IIQ0 & blue-planet GS HV 150 IIP0	blueplanet gs backup 165 IIQ0 & blue-planet GS HV 165 IIQ0
Battery voltage Min. - Max.	668-1.500 V	801-1.500 V	1.002-1.500 V	1.102-1.500 V
Operating range	668 - 1.500 V	801 - 1.500 V	1.002 - 1.500 V	1.102 - 1.500 V
Nominal charge/discharge current	160 A			
Max. charge/discharge current	183 A			
Max. DC current (ISC max.)	300 A			
Polarity safeguard	optional / yes with PCU			

AC output data	blueplanet gs backup 100 IIQ0 & blue-planet GS HV 100 IIG0	blueplanet gs backup 120 IIQ0 & blue-planet GS HV 120 IIK0	blueplanet gs backup 150 IIQ0 & blue-planet GS HV 150 IIP0	blueplanet gs backup 165 IIQ0 & blue-planet GS HV 165 IIQ0
Rated power @ nominal voltage	100 kVA	120 kVA	150 kVA	165 kVA
Rated power at 90 % Vrated in accordance with AR-N-VDE 4110	90,4 kVA	108,5 kVA	135,6 kVA	149,2 kVA
Rated voltage	400 V (3P+N+PE)	480 V (3P+N+PE)	600 V (3P+N+PE)	660 V (3P+N+PE)
Rated current	3 x 144,3 A			
Max. continuous current	3 x 145 A			
Contribution to peak short-circuit current ip	212 A			
Initial short-circuit alternating current (Ik" first single period effective value)	150,8 A			
Short-circuit alternating current duration (max output fault current)	150,8 A			
Voltage range: continuous operation	300 V - 460 V (Ph-Ph)	360 V - 552 V (Ph-Ph)	450 V - 690 V (Ph-Ph)	495 V - 759 V (Ph-Ph)
Rated frequency	50/60 Hz			
Frequency range	45 - 55 / 55 - 65 Hz			
Reactive power	0-100 % Snom			
cos phi	0,3 - 1 ind/cap			
Number of feed-in phases	3P + N (N for Backup + HV)			
Distortion factor (THD)	< 3 %			
Inrush current	5 A [RMS (20ms)]			
Ik / Ik(100) / Ik´´	1,0 p.u.			
Overvoltage protection	Base socket			

AC Outupt (backup operation)	blueplanet gs backup 100 IIQ0	blueplanet gs backup 120 IIQ0	blueplanet gs backup 150 IIQ0	blueplanet gs backup 165 IIQ0
Rated power @ nominal voltage	100 kVA	120 kVA	150 kVA	165 kVA

EN

AC Outupt (backup operation)	blueplanet gs backup 100 IIQ0	blueplanet gs backup 120 IIQ0	blueplanet gs backup 150 IIQ0	blueplanet gs backup 165 IIQ0
Rated power at 90 % Vrated in accordance with AR-N-VDE 4110	90,4 kVA	108,5 kVA	135,6 kVA	149,2 kVA
Rated current	3 x 145 A			
Max. switching time / Trans-fertime	> 100 ms			
Output THDv (at linear load)	< 3 %			
Maximum unbalanced load	50 A [3]			
Off-grid V/f control accuracy	±1 % / <5 % load step			
N-PE bonding / earthing off-grid	external			

4.2 General data

General data	blueplanet gs backup 100 IIQ0 & blue-planet GS HV 100 IIG0	blueplanet gs backup 120 IIQ0 & blue-planet GS HV 120 IIK0	blueplanet gs backup 150 IIQ0 & blue-planet GS HV 150 IIP0	blueplanet gs backup 165 IIQ0 & blue-planet GS HV 165 IIQ0
Self consumption: Standby	< 8 / <14 with PCU Relay closed			
Efficiency (charging)	99,50 %		99,54 %	
Efficiency (discharging)	99,49 %		99,46 %	
External PCU voltage supply	24 V DC (20 V - 28 V DC)			
External PCU power supply	2,5 A			
PCU power supply duration	continuous			
Circuit design	transformerless			
“Inverter Off” signal trip-off time	10 ms			
Grid-parallel operation (On-Grid)	yes, 5			
DC parallel mode	yes, 2 (EMC tested)			
Operation mode	Grid-parallel operation (charging/discharging) + island operation (backup)			
Battery type	All intrinsically safe battery types, e.g. lithium-ion			
Protection class / over voltage category	I / III			
Clock frequency	48 kHz			
Grid monitoring	country-specific			
Distribution system	TN system, TT system, solidly grounded wye			
RCMU	yes, electronic RCD type B (only in DC single mode)			

Mechanical data	blueplanet gs backup 100 IIQ0 & blue-planet GS HV 100 IIG0	blueplanet gs backup 120 IIQ0 & blue-planet GS HV 120 IIK0	blueplanet gs backup 150 IIQ0 & blue-planet GS HV 150 IIP0	blueplanet gs backup 165 IIQ0 & blue-planet GS HV 165 IIQ0
Display	LEDs			
Controls	Web server			
Menu languages	EN; DE; FR; IT; ES; PL; NL; PT; CZ; HU; SL; TR; RO; DA			
Interfaces	2 x Ethernet, INV OFF, error relay (30V potential free contact)			
Communication	TCP/IP, Modbus TCP , Sunspec			
Potential-free relay	yes			

[3] Unbalanced load per device – for parallel DC circuit **50 A per system**.

EN

Mechanical data	blueplanet gs backup 100 IIQ0 & blueplanet GS HV 100 IIG0	blueplanet gs backup 120 IIQ0 & blueplanet GS HV 120 IIK0	blueplanet gs backup 150 IIQ0 & blueplanet GS HV 150 IIP0	blueplanet gs backup 165 IIQ0 & blueplanet GS HV 165 IIQ0
DC isolator switch	no			
AC isolator switch	no			
Cooling	Temperature-controlled fan, max. airflow 364 m³/h			
Number of fans	3x external, 1x internal			
Noise emission	<60 dB(A)			
Housing material	AL			
HxWxD	719 mm x 699 mm x 450 mm			
Weight	78 (M); 81 (L); 82 (XL) kg			
Precharge unit	L + XL			
DC load relay +	L + XL			
DC load relay -	XL			
DC fuse	M + L + XL			
Safety	EN 62109-1, EN 62109-2			
Interference immunity/ interference emission/ grid feedback	EN 61000-6-2 / 62920 -Class A, EN55011 - Class A / EN61000-3-11, EN 61000-3-12			

Communication Topology	Star (No Daisy Chain)
Master-Slave Between Devices	No – each device operates independently using droop curves
Symmetrical Feed-In (On-Grid)	Yes, with standard maximum current
Droop Curves	Definierbar für Genset-Betrieb

4.3 Environmental data

Environmental data	blueplanet gs backup 100 IIQ0 & blueplanet GS HV 100 IIG0	blueplanet gs backup 120 IIQ0 & blueplanet GS HV 120 IIK0	blueplanet gs backup 150 IIQ0 & blueplanet GS HV 150 IIP0	blueplanet gs backup 165 IIQ0 & blueplanet GS HV 165 IIQ0
Installation height	3.000 m (Derating from 2.000 m)			
Installation distance from coast	> 500 m			
Pollution level inside the enclosure	2 (reduced by IP 66 Housing)			
Pollution level outside the enclosure	3			
Ambient temperature	-20-+60 °C			
Ambient temperature (storage)	-25-+60 °C			
Protection rating (installation location)	IP66 /NEMA 4X			
Humidity range (condensing)	100 %			
Humidity range (non-condensing during storage)	95 %			

Environmental data	blueplanet gs backup 100 IIQ0	blueplanet gs backup 120 IIQ0	blueplanet gs backup 150 IIQ0	blueplanet gs backup 165 IIQ0
Item number	1002350 (M) / 1002351 (L) / 1002352 (XL)	1002353 (M) / 1002354 (L) / 1002355 (XL)	1002356 (M) / 1002357 (L) / 1002358 (XL)	1002410 (M) / 1002412 (L) / 1002413 (XL)

EN

Environmental data	blueplanet gs backup 100 IIQ0	blueplanet gs backup 120 IIQ0	blueplanet gs backup 150 IIQ0	blueplanet gs backup 165 IIQ0
Name on nameplate	blueplanet gridsave backup 100 IIGM / blueplanet gridsave backup 100 IIGL / blueplanet gridsave backup 100 IIGXL	blueplanet gridsave backup 120 IIKM / blueplanet gridsave backup 120 IIKL / blueplanet gridsave backup 120 IIKXL	blueplanet gridsave backup 150 IIPM / blueplanet gridsave backup 150 IIPL / blueplanet gridsave backup 150 IIPXL	blueplanet gridsave backup 165 IIQM / blueplanet gridsave backup 165 IIQL / blueplanet gridsave backup 165 IIQXL

Environmental data	blueplanet gs HV 100 IIG0	blueplanet gs HV 120 IIG0	blueplanet gs HV 150 IIG0	blueplanet gs HV 165 IIG0
Item number	1002442 (M) / 1002443 (L) / 1002444 (XL)	1002445 (M) / 1002446 (L) / 1002447 (XL)	1002448 (M) / 1002449 (L) / 1002450 (XL)	1002451 (M) / 1002452 (L) / 1002453 (XL)
Name on nameplate	blueplanet gridsave HV 100 IIGM / blueplanet gridsave HV 100 IIGL / blueplanet gridsave HV 100 IIGXL	blueplanet gridsave HV 120 IIKM / blueplanet gridsave HV 120 IIKL / blueplanet gridsave HV 120 IIKXL	blueplanet gridsave HV 150 IIPM / blueplanet gridsave HV 150 IIPL / blueplanet gridsave HV 120 IIPXL	blueplanet gridsave HV 165 IIQM / blueplanet gridsave HV 165 IIQL / blueplanet gridsave HV 165 IIQXL

4.4 Accessories

	blueplanet gs backup 100 IIQ0	blueplanet gs backup 120 IIQ0	blueplanet gs backup 150 IIQ0	blueplanet gs backup 165 IIQ0
DC fuse	M + L + XL			
Precharge unit	L + XL			
DC load relay +	L + XL			
DC load relay -	XL			

4.5 Permitted and non-permitted operating modes

Operation modes	blueplanet gs backup 100 IIQ0 & blueplanet GS HV 100 IIG0	blueplanet gs backup 120 IIQ0 & blueplanet GS HV 120 IIK0	blueplanet gs backup 150 IIQ0 & blueplanet GS HV 150 IIP0	blueplanet gs backup 165 IIQ0 & blueplanet GS HV 165 IIQ0
Operation mode	Grid-parallel operation (charging/discharging) + island operation (backup)			
Backup	possible, can be activated via EMS / No (HV)			
Continuous island operation (> 15 % per year)	No			
Stationary application	Yes			
Mobile application (construction sites, festivals)	No			
Maritime application	No			
Contribution to grid restoration	No			
UPS function	No (> 100 ms, no true uninterrupted UPS transfer)			

EN

5 Transportation and Delivery

Every product leaves our factory in perfect electrical and mechanical condition. Special packaging ensures that the devices are transported safely. The shipping company is responsible for any transport damage that occurs.

5.1 Check the equipment included

- Grid-tied battery inverter with backup function
- Mount
- Installation kit
- Manual [online] / Quickguide [multi-language]

1. Inspect the device thoroughly.
2. Immediately notify the shipping company in case of the following:
   - Damage to the packaging that indicates that the device may have been damaged.
   - Obvious damage to the device.
3. Send a damage report to the shipping company immediately.
4. The damage report must be received by the shipping company in writing within 6 days following receipt of the device. We will be glad to help you if necessary.

5.2 Transporting the device

⚠ CAUTION

Hazard due to impact; risk of breakage to the device.

1. Pack the device securely for transport.
2. Carefully transport the device using the transportation pallet.
3. Do not expose the device to any shocks.

For safe transportation of the product, use the hand recesses in the carton.

Device Version	Dimensions (H × W × D)	Total Weight Including Packaging
Blueplanet gs backup 100 – 165 II_M	830 mm x 780 mm x 550 mm	80 kg
Blueplanet gs backup 100 – 165 II_L		83 kg
Blueplanet gs backup 100 – 165 II_XL		84 kg

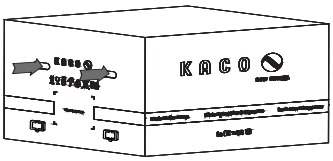

Fig. 5: Transporting the device

5.3 Installation tool

The codes given in the table below are used in all usage instructions for assembly/installation/maintenance and disassembly for the tools and tightening torques being used.

Symbol	Screw head contour	Symbol	Screw head contour
W	External hexagon	A	Internal hexagon
T	Torx	S	Slot

Tab. 2: Key and description of tool codes

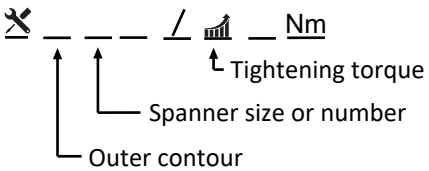

Fig. 6: Presentation format

EN

6 Assembly and preparation

6.1 Choosing the installation location

⚠ DANGER

Risk of fatal injury due to fire or explosions

Fire caused by flammable or explosive materials in the vicinity of the device can lead to serious injuries.

1. Do not mount the device in potentially explosive atmospheres or in the vicinity of highly flammable materials.

⚠ CAUTION

Risk of property damage due to gases that have an abrasive effect on surfaces when they come into contact with ambient humidity caused by weather conditions!

The device housing can be seriously damaged due to gases in combination with air humidity resulting from weather conditions (e.g. ammonia, sulphur).

1. If the device is exposed to gases, it must be installed in a location that is visible.
2. Perform regular visual inspections.
3. Immediately remove any moisture from the housing.
4. Ensure adequate ventilation at the installation location.
5. Immediately remove dirt, especially on vents.
6. Failure to observe these warnings may result in damage to the device that is not covered by the warranty.

NOTE

Access by maintenance personnel for service

Any additional costs arising from unfavourable structural or installation conditions will be billed to the customer.

Installation space

- As dry as possible, well air-conditioned, the waste heat must be dissipated from the device.
- Unobstructed air circulation.
- Close to the floor, easily accessible from the front and sides without additional aids.
- For outdoor installation, KACO new energy recommends protecting the device from direct exposure to the weather and sunlight. This can be achieved through structural measures (e.g. a weather protection roof or shading). This reduces thermal heating, premature derating and fan wear.

Mounting surface

- with sufficient load-bearing capacity (at least 4 times the device weight)
- accessible for installation and maintenance work
- Must be made out of heat-resistant material (up to 90 °C)
- flame-retardant
- Minimum clearances to be observed during installation: [See figure 13 [▶ Page 23]

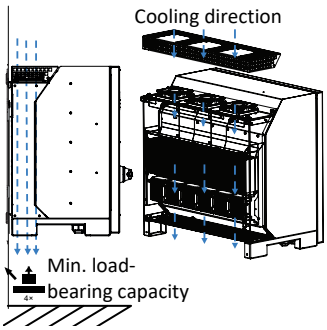

Fig. 7: Load-bearing capacity & cooling direction

EN

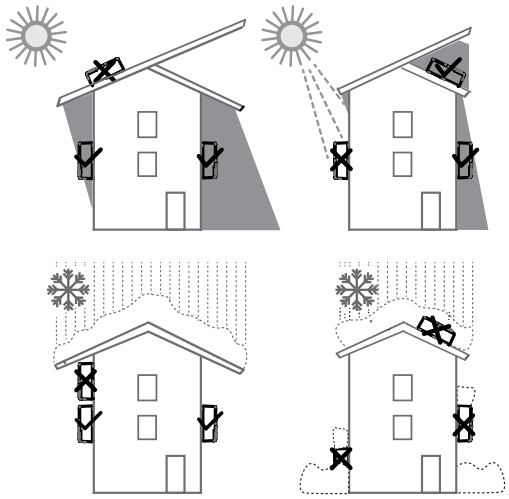

Fig. 8: Device for outdoor installation

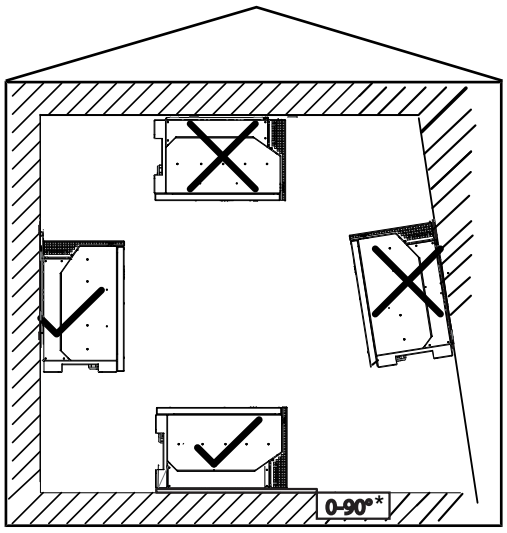

Fig. 9: Permissible installation location
***NOTE on 0 – 90°**: At **0-10°**, use is only permitted indoors or by installing a suitable rain cover.

6.2 Unpacking the device

⚠ CAUTION

Risk of injury caused by excessive physical strain.

Lifting the device for transportation, to change location and during installation can lead to injuries (e.g. spinal injuries).

1. Only lift the device using the openings provided.
2. The device must be transported and installed by at least 3-4 persons.
3. Be mindful of the weight of the device and use aids to secure it.

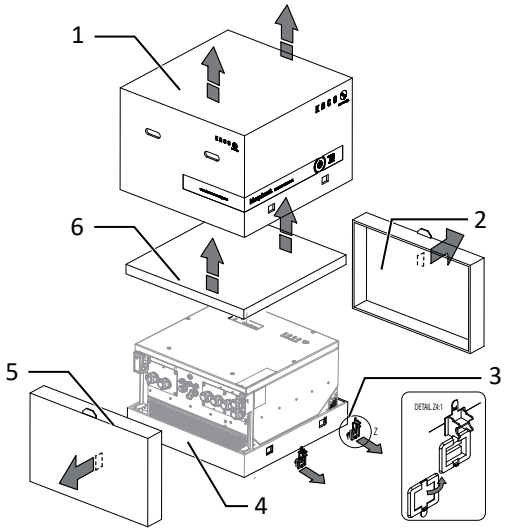

Fig. 10: Opening the package

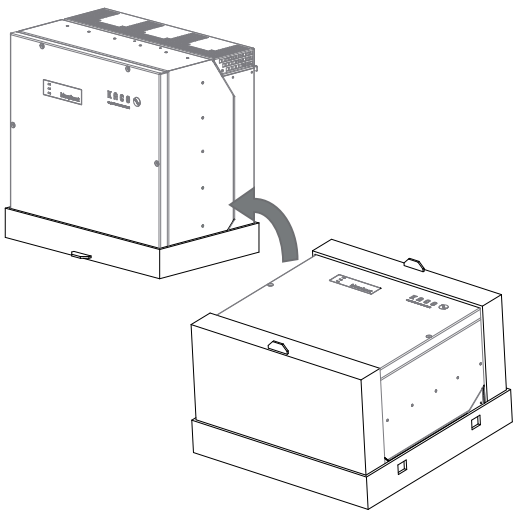

Fig. 11: Setting the device upright

Key			
1	Cover	4	Base
2	Upper side section	5	Lower side section
3	Clamp (4x)	6	Cardboard packaging with mount and mounting kit

↻ The device is transported to the installation location.

1. Remove the plastic band from the pallet and packaging.
2. Pull the clamp off the packaging.
3. Pull the hood upwards to remove it and place the cardboard packaging to one side together with the mount and accessories.

4. Set the device with base and side sections upright.
5. Remove the top side section and base from the device.

⇨ If the device is in the correct installation position: Proceed with the installation of the mount.

6.3 Fastening the mount

⚠ WARNING

Danger when using unsuitable fastening materials!

If unsuitable fastening materials are used, the device may fall and seriously injure persons in front of the device.

1. Only use fastening materials suitable for the mounting surface. Only use the supplied fastening materials for masonry and concrete.
2. Only install the device suspended in an upright position.

↻ Cardboard packaging with mount and mounting kit removed from the packaging and opened.

1. Check that the conditions and minimum room height comply with the specified dimensions.
2. Mark the hanging position on the wall surface using the enclosed template.

. **NOTE: The minimum clearances between two devices, or the device and the ceiling or floor have already been taken into account in the diagram.**

3. Fix the mount to the wall using suitable mounting fixtures from the mounting kit.

. **NOTE: Make sure that the mount is oriented correctly.**

⇨ Proceed with the installation of the device.

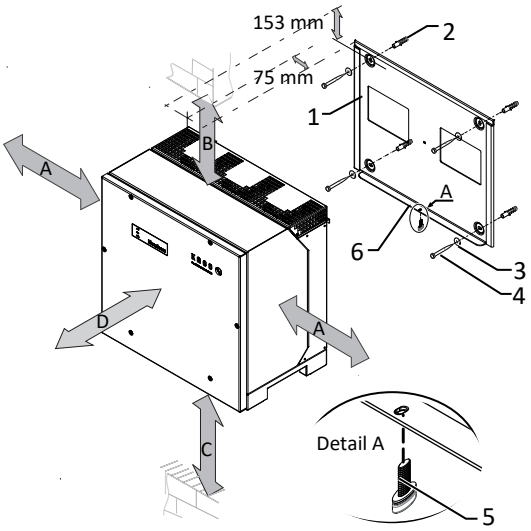

Fig. 12: Minimum clearances for wall mounting

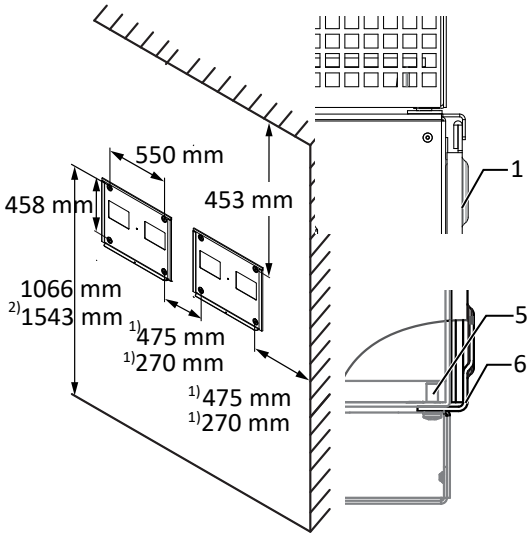

Fig. 13: Wall mounting

Key			
1	Mount	4	Screw for mounting (4x) SW 13 / [See section 6.3 Page 23]
2	Fastening anchors [S12-Ø12 mm /90 mm]	5	Screw for securing purposes (1x)
3	Lock washer	6	Bracket to store the device
A	Minimum clearance: 120 mm	1)	Minimum clearance excluding device:270 mm
	Recommended clearance: 400 mm	1)	Recommended clearance excluding device:475 mm
B	Minimum clearance: 300 mm	-	-
C	Minimum clearance: 500 mm	-	-
D	Recommended clearance: 1000 mm	2)	Recommended clearance with DC breaker:1543 mm

EN

6.4 Installing and securing the device

⚠ CAUTION

Risk of injury from improper lifting and transport.

If the device is lifted improperly, it can tilt and result in a fall.

1. The device must be transported and installed by at least 3-4 persons.
2. Always lift the device vertically using the openings provided.
3. Use a climbing aid for the chosen installation height.
4. Wear protective gloves and safety shoes when lifting and lowering the device.

NOTE

Power reduction due to heat accumulation!

If the recommended minimum clearances are not observed, the device may go into power regulation mode due to insufficient ventilation and the resulting heat build-up.

1. Observe minimum clearances and provide for sufficient heat dissipation.
2. All objects on the device housing must be removed during operation.
3. Ensure that no foreign bodies prevent heat dissipation following device installation.

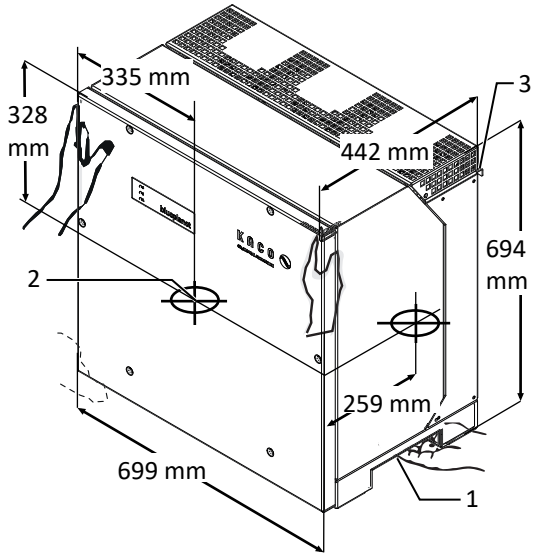

Fig. 14: Lift the device using the opening

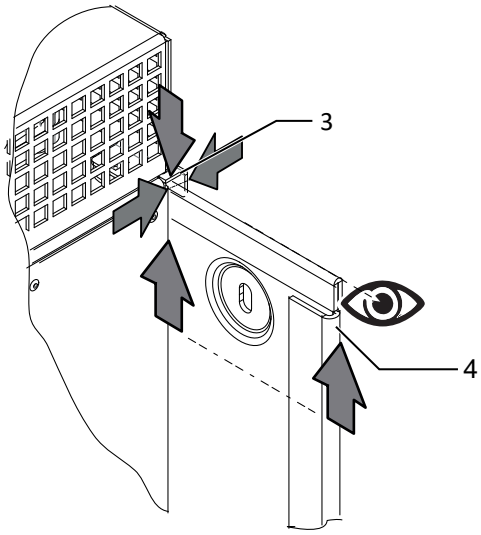

Fig. 15: Fitting the device onto the mount

Key			
1	Opening	3	Mounting bracket
2	Centre of gravity	4	Mount

Lifting and installing the device

↻ The mount has been installed.

1. Raise the device using the lower side recesses and support it on the head side. Observe the device's centre of gravity!

. **NOTE: Do not lift the device by the lid or cover!**

2. Insert the device via the mounting bracket angle into the upper support bracket. Fully place the device onto the lower angle bracket so that the rear side of the device sits flush against the bracket [See figure 13 [▶ Page 23].

3. Insert the supplied screw into the tab of the bracket and fasten the device to secure it against lifting out [T30 / 2 Nm] .

. **NOTE: Alternatively: At this point, the screw described above can be replaced by a special screw as anti-theft protection.**

⇨ Device is installed. Proceed with the electrical installation.

EN

⚠ CAUTION

Risk of damage to property as a result of condensation

During pre-assembly of the device, moisture can penetrate into the interior via the dust-protected threaded connections. The resulting condensate can cause damage to the device during installation and start-up.

✓ Keep the device closed during pre-assembly and do not open the connection area until you perform installation.

1. Seal off the screw connections using sealing covers.
2. Prior to installation, check the inner area for condensation and if necessary, allow it to dry sufficiently before installation.
3. Immediately remove any moisture from the housing.

EN

7 Installation

7.1 Opening the housing

↻ The device has been installed on the mount.
↻ Wipe any moisture off the frame of the housing cover using a cloth.

☞ Undo the 6 screws (2) and carefully remove the housing cover (1) [T_25]

☞ Take care not to damage or soil the seals and fibre optics when setting down the housing cover.

⇨ Proceed with the installation of the device.

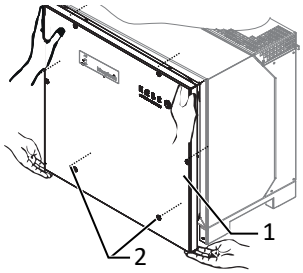

Fig. 16: Removing the housing cover

7.2 Surveying the connection area

The connection point for the AC supply is situated inside the housing. The DC input source is also connected inside the housing.

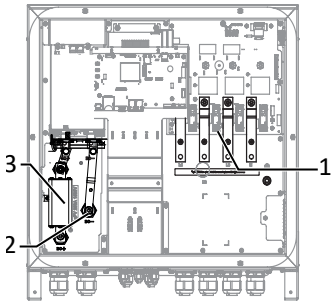

Fig. 17: Connection area M version

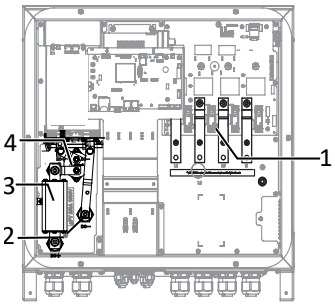

Fig. 18: Connection area L version

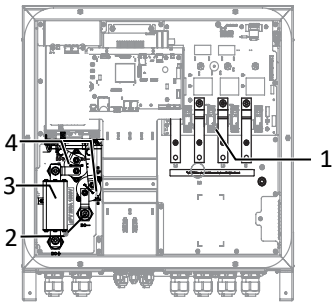

Fig. 19: Connection area XL version

Key			
1	AC connection point	3	DC fuse with connection point
2	DC connection point	4	DC load relay(for precharge unit)

7.3 Making the electrical connection

NOTE

Select the cable cross-section, fuse type and fuse value in accordance with the following master conditions

Country-specific installation standards; power rating of the device; cable length; type of cable installation; local temperatures.

NOTE

Specification of the DC fuse

Due to the fact that the device is unable to limit the short circuit current from the grid in the event of a short circuit, the AC-side fuse in the installation (on-site) provides protection against faults on the DC side.

For device safety, the max. prospective DC current is limited by the internal DC fuse in the event of an error. Specification of the DC fuse (F1):

- 250Adc nominal current
- Nominal voltage (DC) > max. battery voltage
- Breaking capacity: 30kA

Use of e.g. Bussmann EATON PV-250A-2XL-3BU-15 (1500Vdc).

EN

7.3.1 Requirement for supply lines and fuse

AC Side	
Max. conductor cross-section	240 mm² (AL or CU)
Min. cable cross-section	according to local installation standards
Cable diameter for cable fitting	16-28 mm
Length of insulation to be stripped off	Depending on the cable lug
Cable lug Ø connection bolt	Hole for M10 screw
Tightening torque	30 Nm
Connection type	Cable lug (Use a cable lug suitable for the cable material!)
Cable lug dimension b - maximum width	42 mm
Ground conductor connection	M10
Ground conductor connection tightening torque	10 Nm
Fuse protection for installation provided by customer (max. output overcurrent protection)	max. 250A
Fitting for AC connection	5x M40
Torque for cable fitting	10 Nm
DC side	
Max. conductor cross-section	240 mm² (AL or CU)
Min. cable cross-section	according to local installation standards
Cable diameter for cable fitting	16 - 28 mm
Cable lug dimension b width max.	42 mm
Length of insulation to be stripped off	Depending on the cable lug
Recommended cable type	Solar cable
Cable lug Ø connection bolt	Hole for M10 screw
Tightening torque	30 Nm
Fitting for DC connection	2x M40
Torque for cable fitting	10 Nm
Interfaces	
Cable diameter for cable fitting	8 - 17 mm
Torque for cable fitting	3 (M25) Nm
RS485 connection type	Spring-clamp terminal
RS485 terminal conductor cross-section	0,25 - 1,5 mm²
Cable diameter for cable fitting	(3x) 5 - 10 mm
Torque for cable fitting	1,5 (M16) Nm
Ethernet conductor cross-section	0,5-0,7 mm²
Ethernet connection type	RJ45
External PCU power supply connection type	Spring-clamp terminal
External PCU power supply conductor cross-section	0,25 - 1,5 mm²

7.4 Connecting the device to the power grid



⚠ WARNING

IP66 (IEC 60529) not guaranteed!

Ingress of condensation, dust or vermin can lead to short-circuiting/overheating or even failure of the device.

1. Tighten **all** cable/sealing plug/housing screw connections to the **specified torques**.
2. If cable glands are not used, the sealing plugs must be retained with the specified torques.
3. The applicable torque values are given in the respective installation steps or in the table. [See section 7.3.1 Page 27]

EN

7.4.1 Preparing the grid connection

↻ Time required for AC connection: 30 min

↻ Nominal grid voltage corresponds to the "VAC nom" value on the nameplate.

1. For improved accessibility: Unfasten the AC input plate using the 6 screws [T_30]
2. Cable glands for the AC connection and PE grounding (ground) loosen [W_46].

. **NOTE: When using metal cable glands, toothed washers must be fitted underneath to establish enclosure grounding.**

3. Remove the sealing plugs.
4. Route the AC cables through the cable glands.
5. Strip the AC cables.
6. Strip the individual wires for L1 / L2 / L3 / N (ABCD) and PE (Ground), so that the strands and insulation can be pressed into the cable lug sleeve.

. **CAUTION! Risk of fire due to chemical corrosion. Cable lugs must be suitable for the conductor material and copper busbars being used.** [4]

7. Crimp the cable lug.
8. Slide the heat-shrink tubing (not included in the scope of delivery) over the shank of the ring cable lug of the AC cable.
9. Secure the input plate using the 6 screws [T_30 / 6 Nm

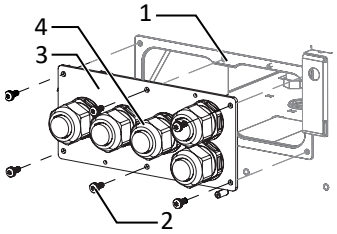

Fig. 20: Detach the AC mounting plate

1 Housing base – AC-side
2 Screws for mounting
3 Input plate
4 Cable fitting

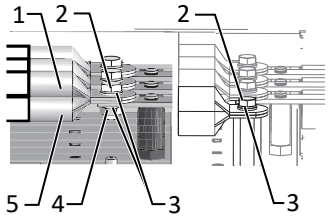

Fig. 21: Preparing the AC connection

1 Ring cable lug (top)
2 Screw
3 Lock washer
4 Nut
5 Ring cable lug (bottom)

7.4.2 Making the grid connection

↻ **4/5-pole connection, TN, TT system** is prepared.

1. Loosen nut and lock washer at the marked grounding point.
2. Lay the grounding cable onto the grounding point. Secure it with the nut and lock washer provided [W_17 / 10 Nm]. [5]
3. Place the cable lug of cores L1 / L2 / L3 / N on the busbar in accordance with the labelling and secure it with a screw, nut and lock washer (fastening elements in the scope of supply) [W_17 / 30 Nm].
4. Check secure fit of all connected cables.
5. Tighten AC cable fittings [W_46 / 10 Nm].

⇨ The device is connected to the power grid.

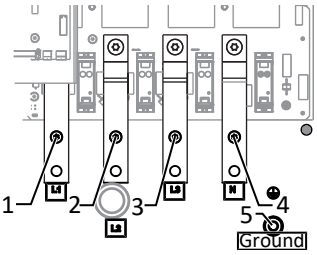

Fig. 22: AC grid connection 4/5-pole

1 L1 busbar
2 L2 busbar
3 L3 busbar
4 N busbar
5 PE earthing point

NOTE

Earthing recommendation

Observe the general earthing recommendation of the existing mains system.

[4] When using aluminium cable lugs we recommend using cable lugs with galvanic tin plating or, alternatively, AL/CU cable lugs with suitable AL/CU washers. Otherwise, the aluminium may be destroyed by the copper busbars in the presence of electrolytes (e.g. condensate).

[5] If the connection is made in a TN-C grid, connect the PEN grounding cable to the ground earthing point.

EN

NOTE

Cable cross-section sizing

If the cable resistance is high, i.e., if the cable on the grid side is long, the voltage drop across the cable increases during operation. If the terminal voltage exceeds or falls below the country-specific limit, the device switches off.

1. Ensure that the cable cross-sections are sufficiently large or that the cable lengths are short.

7.5 Connecting the battery to the device

⚠ DANGER

Danger to life due to electric shock!

When connecting the batteries and installing supply cables, electric arcs may occur, which can result in serious personal injury and property damage.

1. Insert the internal fuse before connecting the DC voltage.
2. Repair any damage to the DC cable immediately.
3. Batteries must be designed in protection class I with equipotential bonding or in protection class II with a double-insulated DC cable.

⚠ WARNING

Danger caused by reverse polarity at the DC connection.

The device does not have reverse polarity protection on the DC connection. This can lead to destruction of the device.

1. Check polarity using suitable measuring equipment before connecting the DC cable.
2. Failure to observe these warnings may result in damage to the device that is not covered by the warranty.

NOTE

Required assembly tools

For installation of the DC cables, use a torque wrench as well as an open-ended wrench for counter-resistance with the following designation and dimensions:

1. Double open-end spanner, WM 16+17, metric **short** with max. length of 160 mm (GEDORE)

⚠ WARNING

IP66 (IEC 60529) not guaranteed!

Ingress of condensation, dust or vermin can lead to short-circuiting/overheating or even failure of the device.

1. Tighten **all** cable/sealing plug/housing screw connections to the **specified torques**.
2. If cable glands are not used, the sealing plugs must be retained with the specified torques.
3. The applicable torque values are given in the respective installation steps or in the table. [See section 7.3.1 Page 27]

7.5.1 With precharge unit

NOTE

Galvanic isolation depending on device variant

Device variant L: The insulation is 1-pin.
Device variant XL: The isolation is on all pins.

EN

L & XL variant

↻ Time required for DC connection: 15 min

↻ Connection cable with 2 x 1 conductors is ready at the device.

1. For better accessibility: Loosen the DC input plate by removing the 4 screws [T_30].
2. Loosen the cable gland [W_46]
. **NOTE: When using metal cable glands, toothed washers must be installed to establish grounding of the enclosure.**
3. Remove the outer sheath from the DC cables.
4. Feed the DC cables through the cable glands into the connection area.
5. **Optional:** Slide heat-shrink tubing over the cable insulation and shrink it using a handheld heat-shrink tool after fitting the cable lugs.
6. Fit the DC cables with M10 ring cable lugs [Max. width b 42 mm].
7. Connect the negative (-) cable end to the DC- terminal according to the battery polarity [W17 / 30 Nm].
8. Connect the positive (+) cable end to the DC+ fuse holder according to the battery polarity [W16 / 30 Nm].
9. Check that all connected cables are securely fastened.
10. Ensure that the polarity is correct.
11. Secure the DC input plate using the 4 screws [T_30 / 6 Nm
12. Tighten the cable glands [W_46 / 10 Nm].

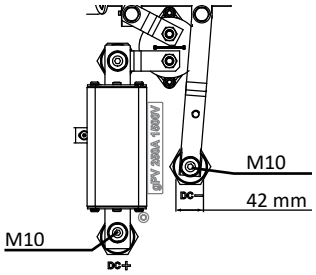

Fig. 23: DC connection L version

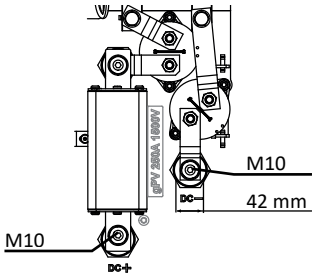

Fig. 24: DC connection XL version

7.5.2 Without precharge unit

⚠ CAUTION

Danger caused by exceeding the inrush current

The device does not have a inrush current limiter on the DC side. Exceeding the maximum permissible inrush current of 300A can lead to destruction of the device.

1. The inrush current must be limited to a max. current of 300A using external means. The DC input capacity of the device is approx. 550µF.
2. DC link may still be charged link after disconnecting the device from the battery. The limitation of the inrush current must also be ensured in this scenario.
3. Failure to observe these warnings may result in damage to the device that is not covered by the warranty.

M variant

↻ Connection cable with 2 x 1 conductors is ready at the device.

1. **For better accessibility:** Loosen the DC input plate using the 4 screws [T_30].
2. Loosen the cable gland [W_46].
. **NOTE: When using metal cable glands, toothed washers must be fitted underneath to establish enclosure grounding.**
3. Strip the outer sheath from the DC cables.
4. Route the DC cables through the cable glands into the connection area.
5. **Optional:** Slide the heat-shrink tubing over the cable insulation and, after fitting, shrink it using a handheld heat-shrink tool.
6. Fit the DC cables with an M10 ring cable lug [Max. width b. 42 mm]
7. Connect the negative (-) cable end to the DC- connection according to the polarity of the battery [W17 / 30 Nm].
8. Connect the positive (+) cable end to the DC+ fuse holder according to the polarity of the battery [W16 / 30 Nm]
9. Check that all connected cables are securely fitted.
10. Ensure that the polarity is correct and that precharging at max. 300A is ensured.
11. Secure the DC input plate using the 4 screws[T_30 / 6 Nm
12. Tighten the cable glands [W_46 / 10 Nm].

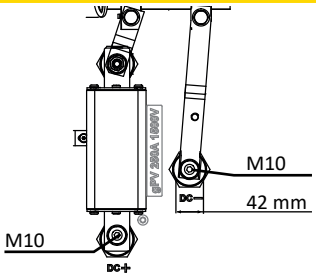

Fig. 25: DC connection M version

EN

7.6 Inserting the overvoltage protection

Installing the RS485 Surge Protection

↻ AC/DC voltage has been disconnected.
↻ Device open [See section 7.1 Page 26].

. **NOTE: Clip the RS485 surge protection base element onto the DIN rail from bottom to top at the designated position as shown in the drawing.**

1. The following color coding must be observed for the internal/external RS485 cable:
   Data A => White (WH); Data B => Blue (BU); GND => Violet (VT)
2. Connect the internal RS485 cable to the surge protection base. [See the installation instructions in the [See section 4.4 Page 19] package]

. **NOTE: If both the RS485 external input and output are used, the output of the surge protection base must be connected twice.**

3. Route the RS485 cable through the interface cable gland into the connection area.
4. Strip the outer sheath of the RS485 cable [approx. 20 mm] and strip the individual conductors [8 mm].
5. Fit wire end sleeves onto the wires and connect them to the RS485 base element in accordance with the wiring diagram [S_M3 / 0,5 Nm].
6. Connect the outgoing cable with the RS485 connector (included with the surge protection kit) to the RS485 base element and plug the RS485 connector into the RS485 socket on the communication board.
7. Secure the outgoing cable to the cable guide.
8. Insert the RS485 surge protection module into the base.
9. Ensure that the protective elements are securely seated.

⇨ Continue with the installation of the protective elements.

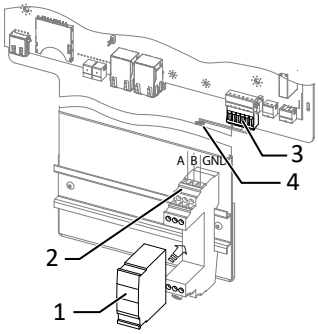

Fig. 26: Insert RS485 overvoltage protection

1 RS485 – overvoltage protection module (optional)
2 RS485 overvoltage protection base mounting on top hat rail
3 RS485 communication plug
4 Cable guide

Ethernet Surge Protection Installation

↻ Ensure that the AC/DC supply is de-energized.
↻ Device open [See section 7.1 Page 26].

1. Clip the Ethernet surge protection module onto the DIN rail from top to bottom.
2. Connect the supplied Ethernet cable to an Ethernet port on the communication board. See the installation instructions in the [See section 4.4 Page 19] package.
3. Route the Ethernet cable through the designated cable gland and plug it into the surge protection module.

⇨ Continue with the installation of the device.

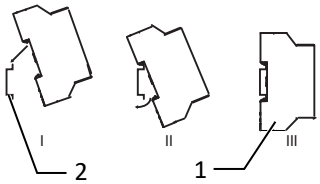

Fig. 27: Insert Ethernet overvoltage protection

1 Ethernet overvoltage protection module (optional)
2 Top hat rail

7.7 Establishing equipotential bonding

NOTE

Use of enclosure grounding

Depending on local installation regulations, it may be necessary to ground the device using a second grounding connection. The threaded stud on the underside of the device can be used for this purpose.

↻ The device has been installed on the mount.

1. Strip the insulation from the equipotential bonding cable.
2. Furnish the stripped cable with an M8 ring cable lug.
3. Lay the cable for equipotential bonding onto the grounding point and attach with an additional M8 nut and lock washer [W_13/ 10 Nm].
4. Check that the connected cable is fitted securely.

⇨ The housing is included in the equipotential bonding.

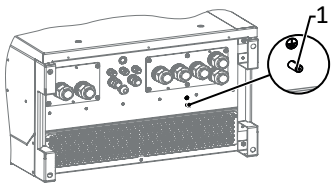

Fig. 28: Additional earthing point

1 Earthing bolt

EN

7.8 Connecting the interfaces

7.8.1 Overview

⚠ DANGER

Risk of fatal injury due to electric shock!

Severe injuries or death may result from improper use of the interface connections and failure to observe protection class III.

1. The SELV circuits (SELV: safety extra low voltage) can only be connected to other SELV circuits with protection class III.

⚠ CAUTION

Damage to the device from electrostatic discharge

Components inside the device can be damaged beyond repair by static discharge.

1. Observe the ESD protective measures.
2. Earth yourself before touching a component by touching a grounded object.

All interfaces are located on the communication circuit board (HMI board) inside the housing.

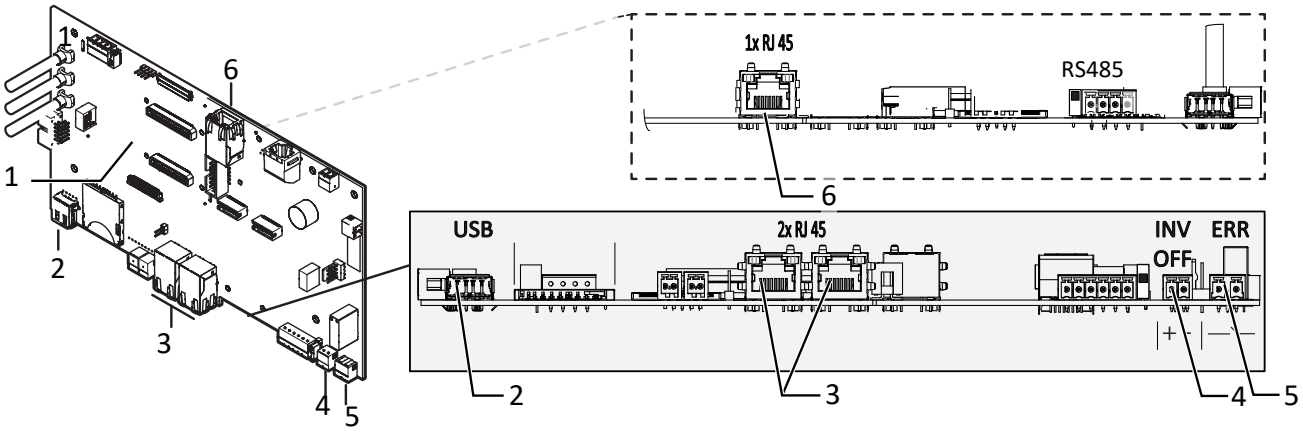

Fig. 29: Communication board (HMI)

1 Communication board	4 INV OFF – Connection for remote control devices – 24 V (+/- 20%) / 1 A (min. 15 mA)
2 USB port	5 ERR – Connection for external grid protection component (fault signal relay)
3 Ethernet for DHCP network connection	6 Ethernet – For commissioning using a static IP only ([See section 8.3.2 Page 39])

For the L and XL backup device variants, the external power supply must be connected to the control board (PCU board).

⚠ WARNING

IP66 (IEC 60529) not guaranteed!

Ingress of condensation, dust or vermin can lead to short-circuiting/overheating or even failure of the device.

1. Tighten **all** cable/sealing plug/housing screw connections to the **specified torques**.
2. If cable glands are not used, the sealing plugs must be retained with the specified torques.
3. The applicable torque values are given in the respective installation steps or in the table. [See section 7.3.1 Page 27]

All interfaces are located on the communication circuit board (HMI board) inside the housing.

For the L and XL backup device variants, the external power supply must be connected to the control board (PCU board).

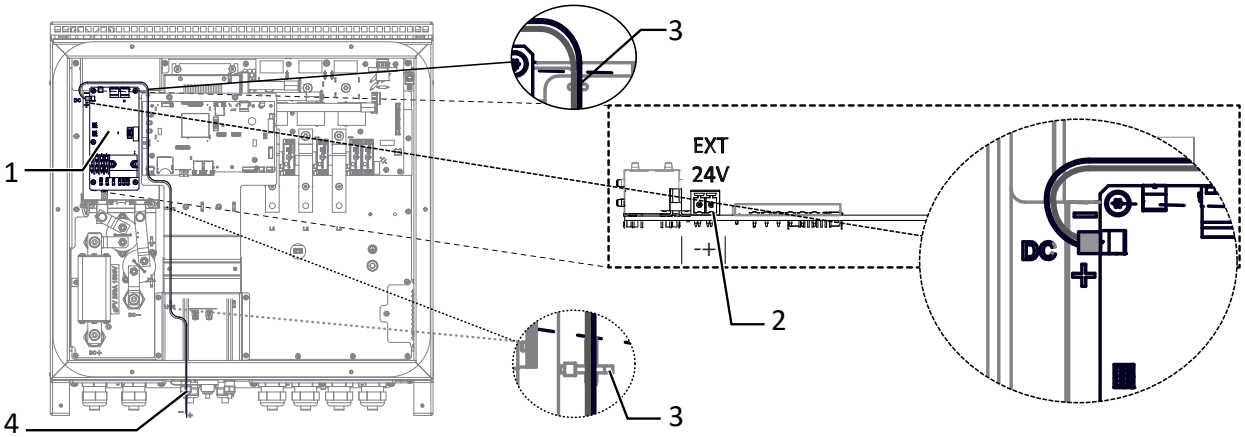

Fig. 30: Control board (PCU)

1	Control board	3	Cable tie
2	IN EXT – Connection for external power supply – 24 V (20 – 28 V DC) / 2,5 A	4	External power supply cable (not included in the scope of delivery – only required for Backup + L, XL device variants)

7.8.2 Inserting and laying the cables

⚠ DANGER

Risk of fatal injury due to electric shock!

Touching damaged insulation on the grid and battery connection leads results in severe injury or death.

1. Check the connection leads for damage.
2. All signal cables for interfaces must be correctly encased using the insulation tube provided from the cable gland up to the connection point.

↻ Time required for connecting the interface cables: 10 min

1. Observe the instructions on the recommended cable for the interface used.
2. Unfasten the cover on the cable fitting [🔧W_20].
3. Feed the signal cable into the connection area.

⇨ Signal cable inserted.

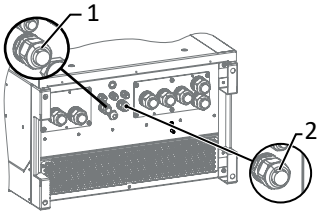

Fig. 31: Inserting signal cables

1	Cable fitting for feeding in the Ethernet cable
2	Cable fitting for feeding in the signal cable

Inserting the Ethernet cable

1. Unfasten and remove the cover on the cable fitting [🔧W_29].
2. Remove the sealing insert.
3. Pass the connection cable through the cover of the cable fitting and the sealing insert.
4. Insert the sealing insert into the cable fitting.
5. Feed the connection cables into the connection area.

⇨ Ethernet cable inserted.

7.8.3 Making the Ethernet connection

NOTE

Feed-in of the communication line

The connection plug of an RJ45 cable is larger than the opening of an M25 cable fitting when it is installed. For this reason, remove the sealing insert before installation and thread the Ethernet cable outside of the cable fitting through the sealing insert.

EN

NOTE

Note the type of network cable

Use a shielded (F/UTP or S/FTP) network cable of at least Category 6. In installations where cables run in close proximity to power conductors or in electromagnetically demanding environments, Category 6A is recommended. The maximum cable length between two devices is 100 m (328 ft). The Ethernet port supports auto-sensing — both crossover and straight-through cables with RJ45 connectors can be used.

↻ Connecting cable inside the device.

1. Plug in an Ethernet cable at one of the two Ethernet ports on the communication circuit board.
2. Check that the connecting cable is fitted securely.

⇨ Connect additional signal cables.

Connecting the device to the network

↻ Ethernet cable connected to the device.

1. Connect the Ethernet cable to the network or a computer.
2. Configure the Ethernet settings and the web server in the Settings menu.

7.8.4 Connecting the fault signal relay

The contact is designed as an N/O contact and is labelled "ERR" or "Relay" on the circuit board.

Maximum contact load	
DC	30 V / 1A

↻ Connection area cover open.

1. Loosen the cable fitting to pass the signal cable through [SW_20]
2. Thread the connection cables through the cable fitting.
3. Attach the connection cables to the terminals. [See section 7.8.1 Page 32]
4. Tighten cable fitting [SW_20 / 1,5 Nm].

. **WARNING! Ensure IP66 protection! See warning message in** [See section 7.4 Page 27]

7.8.5 Connecting the external power supply (backup – L+XL variant)

Devices with an integrated PCU (Backup L/XL) require an AC power supply. Since **the PCU is not supplied with power from the AC grid during backup operation**, an external power supply must be provided. The connection is made via “IN EXT” on the PCU control board. .

WARNING! Ensure correct polarity before connecting! The circuit board may be damaged.

Maximum contact rating	
DC	24V DC (20V DC - 28V DC) / 2,5 A

↻ Connection area cover open.

1. Loosen the cable fitting to pass the signal cable through [SW_20]
2. Thread the connection cables through the cable fitting.
3. Attach the connection cables to the terminals. [See section 7.8.1 Page 32]
4. Tighten cable fitting [SW_20 / 1,5 Nm].

. **WARNING! Ensure IP66 protection! See warning message in** [See section 7.4 Page 27]

7.8.6 Connecting external grid protection components

NOTE

The digital input of the device is intended for connection of external grid protection components.

1. Please note the corresponding application note under Downloads and Videos in the category PV accessories – powador-protect.
2. When using devices from other manufacturers or in combination with KACO inverters, interface switches as a minimum must be used for shutting down devices from other manufacturers.

EN

Connect Powador-protect

NOTE

This product has been removed from the regular sales range and is no longer available through the usual sales channels.

1. This product is available in limited quantities exclusively through our customer service for replacement purposes or for existing projects. Alternatively, a third-party device can be used for the “Inverter OFF” function.
2. This product is only suitable for 380/400 V and gridsave backup 100/120 + HV 100/120, as well as 92.0-TL3-S + 110-TL3-S.

↻ The cable to the external grid protection device is available on the device.
↻ Cover of the device has been opened.

1. Undo the cable fittings [W_20]
2. Pass the connection cable through the cable fittings.
3. Connect wire A (+) to the terminal marked "INV OFF+" on the first device via the "DO1" terminal of the protective device.
4. Connect wire B (-) to the terminal marked "INV OFF-" on the first device via the "GND" terminal of the protective device.
5. Connect the other devices to one another as follows:
   - wire A (+) to wire A (+) and wire B (-) to wire B (-).
6. Tighten cable fitting [W_20 / 1,5 Nm]
7. After commissioning: Configure the `external` Overvoltage protection Powador-protect in the menu entry Features / Functions.

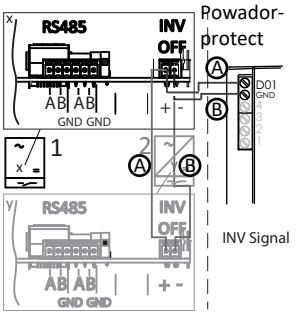

Fig. 32: Connecting the device to Powador-protect

Connecting the external device

NOTE

For the connection of 3rd party devices, a continuous voltage of max. 24 V (+/-20%) with at least 15 mA must be present for the "INV-OFF" connection.

NOTE: When an external device is used, a separate power supply is also required for this purpose. Some external devices only have a normally closed contact and do not supply any voltage.

↻ The cable to the external grid protection device is available on the device.
↻ An external power supply is available at the grid protection device.
↻ Cover of the device has been opened.

1. Undo the cable fittings [W_20]
2. Pass the connection cable through the cable fittings.
3. Connect the corresponding output of the external N/A protection to "INV_OFF+", follow the operating instructions for the external device.
4. Connect the corresponding output of the external N/A protection to "INV_OFF"-, -", follow the operating instructions for the external device.
5. Connect the other devices to one another as follows:
   - wire A (+) to wire A (+) and wire B (-) to wire B (-).
6. Tighten cable fitting [W_20 / 1,5 Nm].
7. After commissioning: Configure the `external` device Overvoltage protection in the menu entry Features / Functions.

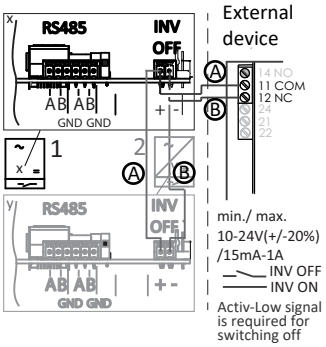

Fig. 33: Connecting the device to the external grid protection device

EN

7.9 Sealing the connection area

↻ Grid connection is prepared.

1. Lift the housing cover onto the housing and loosely tighten the fastening screws.
2. Secure the housing cover (1) by tightening all 6 screws (2) in a diagonally opposite sequence [T_25 / 5 Nm].

⇨ The device has been mounted and installed.

⇨ Put the device into operation.

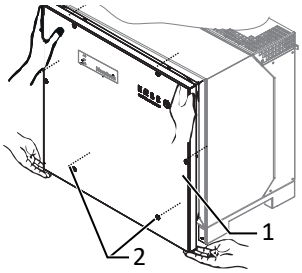

Fig. 34: Closing the housing cover

EN

8 Commissioning

8.1 Requirements



⚠ DANGER

Life-threatening voltages are present at the connections and cables inside the device even after the device has been disconnected and switched off!

Serious injury or death may result from touching the cables and/or terminals/busbars inside the device.

1. The device may only be commissioned by qualified personnel.
2. Keep unauthorized persons away from the device.

↻ The device has been mounted and electrically installed.
↻ The battery supplies a voltage above the configured start voltage.

1. Connect the grid voltage using the external circuit breakers.
2. Activate the battery and connect via the external DC isolator switch.

⇨ During initial start-up: Follow the instructions of the installation wizard.

⇨ Following an interruption in operation: Device waits for the prompt of the EMS/PMS



NOTE

Required Wi-Fi-enabled terminal device

A mobile terminal device with Wi-Fi interface is required in order to put the device into operation

The following functions are only available via the WEB interface:

1. Initial start-up
2. Setting parameters
3. Reset to factory defaults.



NOTE

Use of a suitable web browser

We recommend using an up-to-date Firefox or Chrome browser or the default browser that is available on the mobile terminal devices to configure the device via the web interface.

EN

8.2 Network topologies

NOTE

The operator is responsible for the proper network segmentation and protection of the LAN infrastructure.

The device must be operated in a **protected network environment**. Suitable network separation (e.g. by router, firewall or VLAN segmentation) must be provided between the system network and other networks, especially public or company-wide networks

Recommended network structure (example)

A typical set-up can contain the following components:

- Separate system LAN for inverters (e.g. blueplanet gridsave 92 – 150 TL3-S / blueplanet gridsave backup 100 – 165)
- Firewall or router for separation from the company network or Internet
- Optional: VPN access for secure remote access
- Deactivation of unneeded services

The device must be operated in a **restricted network environment**.

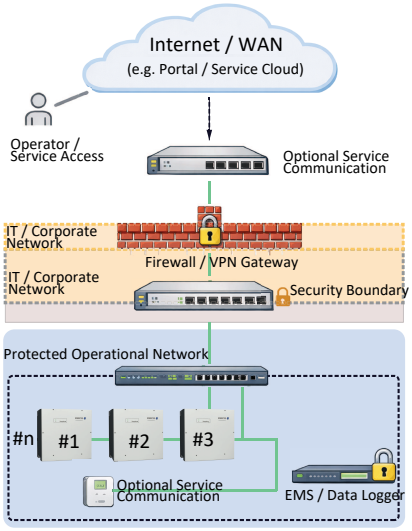

Fig. 35: Recommended network structure

Protection against unauthorised access

The LAN components and the associated cabling must be protected against **unauthorised physical and logical access**. Access to the network must be restricted to authorised persons.

8.3 Start-up options

The following table shows the commissioning variants. A detailed procedure and the applicable conditions can be found in the following subsections.

Option 1: Locally managed start-up via Wi-Fi	Installation technician connects to a KACO inverter via Wi-Fi. Installation wizard carries out start-up steps interactively.
Option 2: Locally managed LAN connection	Installation technician connects to a KACO inverter via LAN. Installation wizard carries out start-up steps interactively.
Option 3: Local start-up with pre-arranged configuration	Installation technician uses a USB memory stick that contains a pre-prepared device configuration. The device imports these settings and is then ready for operation.

8.3.1 Start-up via Wi-Fi

The following figure provides an example of the structure of a KACO device with an EMS and external network connection.

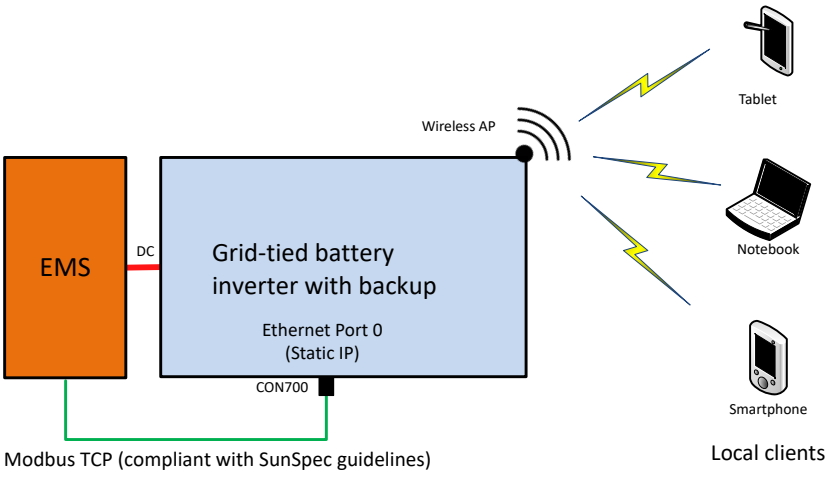

Fig. 36: Start-up via a direct Wi-Fi connection

Application

The planned network infrastructure is not yet in place.

For start-up, devices with a PCU require both an AC and a DC supply.

Required components

- WiFi-compatible notebook, tablet or smartphone (Android or iOS devices can be used).
- USB WiFi stick (KACO accessory, type: WLAN adapter Digitus 150 N micro article no.: 3013222)

Connecting to the KACO Device via WiFi

☞ Insert the USB WiFi stick into the device and connect the notebook or mobile device to the access point created by the device. The WiFi SSID corresponds to the device serial number printed on the nameplate.

☞ Access point name: <Device designation-Serial number> (e.g. "bg100-<Serial number>" or "bg165-<Serial number>")

1. Password: kacowifi
2. On the end device, open the web browser and enter the server name a) or the server address b):

☞ http:// 192.168.1.1

☞ Confirm the entry.

⇨ The device configuration page is displayed.

1. At the Login/register icon, log in as:
2. User or installer
3. Password: (assigned in step 1 [See section 9.1 Page 41])
4. If necessary, enter your access data and confirm by clicking `Login`.

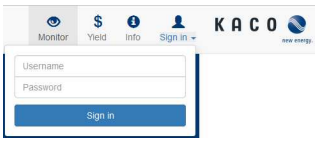

Fig. 37: Login screen

8.3.2 Start-up via LAN connection

The following figure provides an example of the structure of a KACO device with an EMS and external network connection.

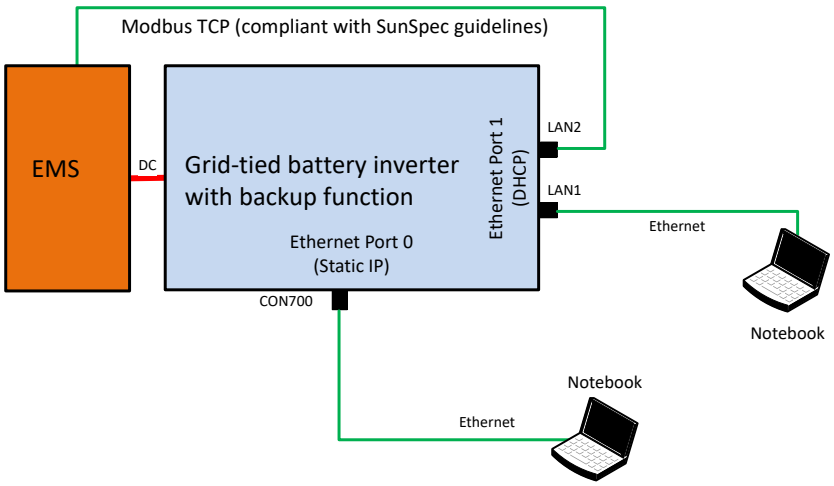

Fig. 38: Start-up via Ethernet

Application

The planned network infrastructure is not yet in place.

For start-up, devices with a PCU require both an AC and a DC supply.

Required components

- Notebook with Ethernet interface
- Ethernet cable (uncrossed patch cable)

Establishing a connection to the KACO device

1. The device must be opened in order to connect the Ethernet cable! For safety reasons, KACO therefore recommends connection via Wi-Fi.
2. The device has 3 Ethernet ports on the communication board that can be used:

- The 2 neighbouring shielded Ethernet ports are labelled LAN1 and LAN2. These ports have an internal switch and, in their factory default state, they expect to receive an IP address from a DHCP server. Consequently, these can only be used if the connected PC provides a DHCP service.
- The port labelled CON700, via which the device can be addressed with the static IP address 169.254.1.1. If you have chosen a wired solution, this option should be preferred.

. **CAUTION! Damage to the printed circuit board due to incorrect connection. Never plug the Ethernet cable into the unshielded RJ45 socket labeled "J200". Doing so may damage the printed circuit board!**

1. On the terminal device, launch the browser and enter the IP address of the device:
2. http://<Device IP address> (if LAN1 or LAN2 ports were used)
3. http://169.254.1.1 (if the port labelled CON700 was used)

⇨ Device configuration page is displayed.

8.3.3 Start-up via a USB memory stick

Application

The installation technician has saved a pre-prepared device configuration on a USB memory stick (e.g. a configuration that he has uploaded during the guided installation of a device or one that has been given to him by a third party).

Required components

- USB memory stick with pre-prepared start-up configuration file.

Procedure

1. Insert the USB flash drive into the USB port on the underside of the device.

⇨ The device checks the stored configuration and uses the LEDs on the front of the device to output a flashing code that indicates whether the configuration is valid ([See section 9.2 Page 44]).

2. If the configuration is valid, the parameters are transferred.

⇨ After the parameters have been applied and the device has restarted, the device starts operation.

EN

9 Configuration and operation

9.1 Initial start-up

During initial commissioning, the installation wizard is launched directly (provided that the device is still in its delivery state and commissioning has not yet been carried out).

The installation wizard can also be launched again at a later time in order to make changes to the original configuration.

NOTE

Using the initial installation wizard

After installation is completed, the installation wizard does not appear again when the device is restarted. You can then change the country setting only in the password-protected parameter menu. The other settings can still be changed in the Settings menu.

The installation process currently consists of multiple steps which are outlined below.

Step: Authorisation

NOTE: Before start-up, individual passwords must be assigned for "User" and "Installer" (see section 2.4.1). This access data will be needed for all future logins – keep it safe and do not save it in your browser.

↻ The installation wizard has been started or re-started.

1. Enter the password (1) in the "User password" field and repeat the password in the "Confirm user password" field.
2. Enter the password (2) in the "Installer password" field and repeat the password in the "Confirm installer password" field.

⇨ The Next button (3) jumps to the next installation step.

*) Password policy: 12 – 64 characters; at least three of the four categories: upper-case letters, lower-case letters, digits and special characters (printable ASCII characters). It is recommended that you change your password regularly.

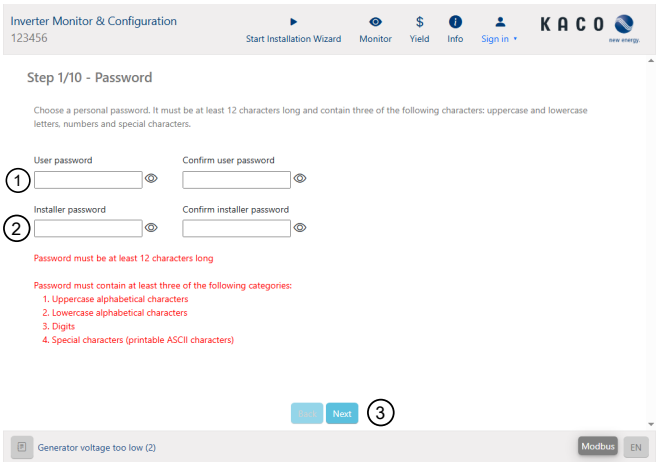

Fig. 39: Initial start-up using the installation wizard – step 1

Step: Language selection

↻ Access to the wizard has been granted.

☞ Select Menu language via the drop-down menu.

⇨ The Next button jumps to the next installation step.

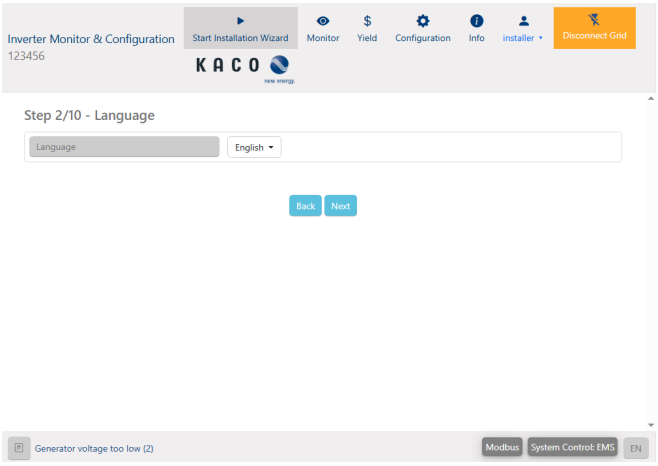

Fig. 40: Initial start-up using the installation wizard – step 2

EN

Step: Country configuration

NOTE: Selecting the country and grid type sets all country-specific grid and protection parameters and determines which certificate is valid (see section 9.4). Select the country and grid type in accordance with the grid operator's specifications at the connection point. After the following restart, the country setting can only be changed via the password-protected parameters menu (see section 9.1).

↻ A language has been selected.

1. Select the country from the "Country" drop-down menu.
2. In the "Grid" drop-down menu, select the grid type / connection guideline (e.g. "Germany VDE-AR-N 4110").
3. Check the nominal grid voltage [V] and nominal grid frequency [Hz]; adjust the nominal grid voltage if necessary (optional, section 9.4).

⇨ The Next button jumps to the next installation step.

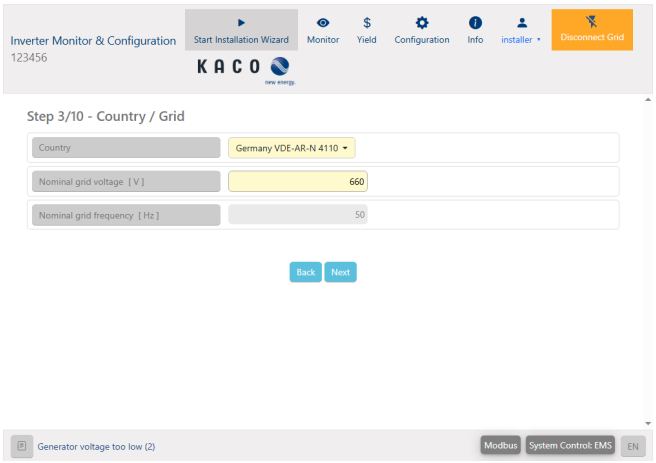

Fig. 41: Initial start-up using the installation wizard – step 3

Step: DC parallel mode

NOTE: For a power increase, several battery inverters can be operated in parallel on the DC side on one battery.

NOTE: Permitted: max. 2 battery inverters per battery (EU Declaration of Conformity); more than 2 only with authorisation from KACO new energy.

NOTE: All devices in DC parallel mode must have the same power and the same firmware version; only fail-safe batteries are allowed to be used.

↻ The country setting has been defined.

↻ The DC-side parallel wiring has been carried out in accordance with the [See section 7 Page 26].

1. Further restrictions: [See section 2.1 Page 8]
2. Activate the checkbox to permit DC parallel mode.

⇨ The Next button jumps to the next installation step.

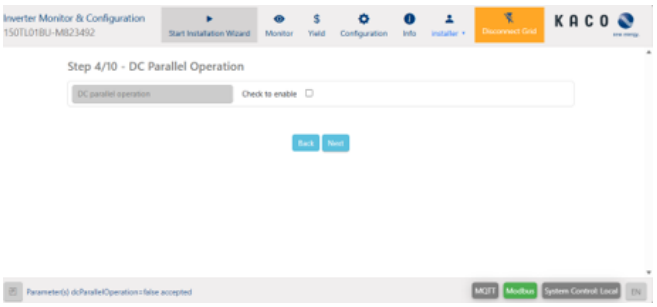

Fig. 42: Initial start-up using the installation wizard – step 4

Step: Power limitation

NOTE: The permanent limitation of the maximum active and apparent power for generation plants is agreed between the grid operator and the plant operator. Set the values in accordance with this agreement (see section 10.4.1).

↻ The country and grid type have been defined.

1. Activate the "Power limitation" checkbox to enable the power limitation.
2. Enter the maximum apparent power S_{max} – in VA (maximum value depending on the device, in accordance with section 4). Limits the device's internal power.
3. Enter the maximum active power P_{max} – as a percentage of the apparent power (1 – 100% S_{max}).

⇨ The Next button jumps to the next installation step.



Fig. 43: Initial start-up using the installation wizard – step 5

EN

Step: Network parameters

NOTE: By default, IP addresses are assigned via the plant DHCP server. If static IP addresses are used, it is no longer possible to distribute the configuration via the segment controller: The IP address would form part of the distributed configuration, meaning that all inverters in the segment would be assigned the same – conflicting – IP address. The operator is responsible for ensuring a protected, segmented network environment.

↻ The power limitation has been defined.

1. Leave DHCP activated so that the IP address, subnet mask and gateway will be obtained automatically – or deactivate “DHCP” and enter the “IP address”, “Subnet mask” and “Default gateway” manually.
2. Leave the DNS server settings activated via DHCP – or deactivate them and enter the “Primary DNS” (and, optionally, “Secondary DNS”).

⇨ The `Next` button jumps to the next installation step.

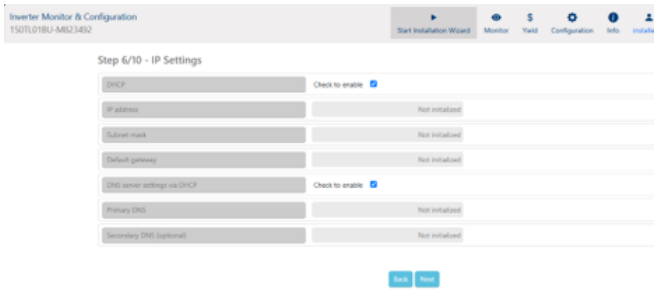

Fig. 44: Initial start-up using the installation wizard step 6

Step: Localisation

↻ Network parameters have been set.

1. Set `Date`, `time and time zone` or initiate synchronisation with the client.
2. **NOTE: An NTP server needs to be activated for synchronisation purposes** [6]
3. Select temperature unit from the drop-down menu.
4. For automatic time synchronisation, activate **NTP Server** and have the server addresses obtained via DHCP – or enter **“NTP server 1”** (and, optionally, **“NTP server 2”** as an alternative server).

⇨ The `Next` button jumps to the next installation step.

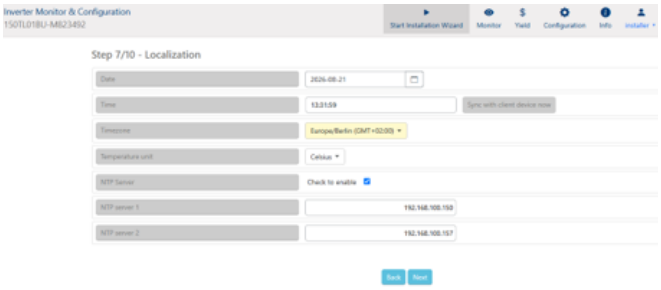

Fig. 45: Initial start-up using the installation wizard step 7

Step: Modbus

↻ Localisation completed.

1. Activate Modbus TCP to allow (read) access via Modbus TCP.
2. Define the Modbus TCP port (network port, default: 502).
3. Activate Modbus TCP write access if required. To allow this, confirm the security prompt “Do you really want to allow write access?” with the action field.

⇨ The `Next` button jumps to the next installation step.



Fig. 46: Initial start-up using the installation wizard step 8

[6] It is preferable to install this on a plant component. It is also possible to select an NTP server localized on the internet provided the device has direct access to the internet.

EN

Step: Optional parameters

NOTE: Using the plant ID, the device – in a future firmware version – can be detected automatically in the Cloud portal and assigned to the plant.

↻ Modbus has been specified.

1. Optionally, enter the device name in the “Device name” field – this is the name used to reach the device in the network.
2. Optionally, enter the plant ID in the “Plant ID” field.

⇨ The `Next` button jumps to the next installation step.

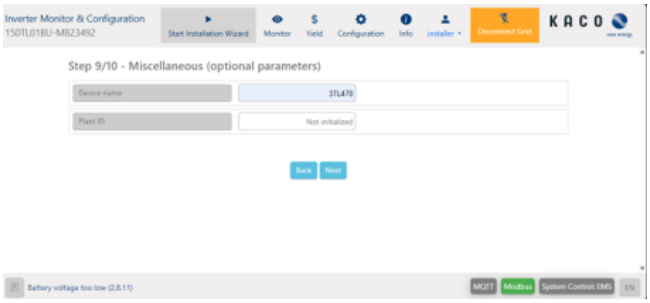

Fig. 47: Initial start-up using the installation wizard step 9

Step: Finalisation

NOTE: The device configuration has been completed successfully.

↻ All the previous installation steps have been completed.

1. In the “The setup event will be logged with the following name” field, enter a name for the log entry (set-up event).
2. Select “Finish” to set the device into operating mode.

⇨ The initial start-up is now complete. Next, define the access rights and connect the device to the grid via the user area (“Connect Grid”).

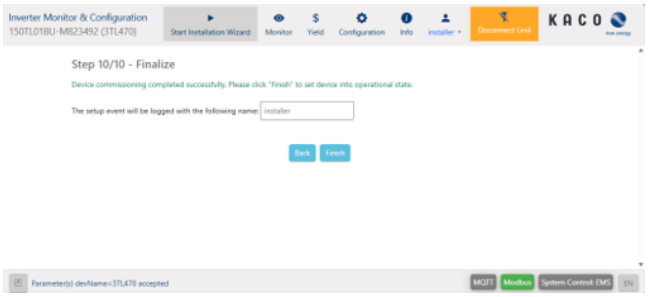

Fig. 48: Initial start-up using the installation wizard – step 10

Step: Complete the installation wizard

NOTE: Installation wizard completed: The device has been set up successfully (with timestamp and user). Three actions are available:

↻ The device was set to operating status by selecting “Finish”.

1. Create report: Generate installation report; includes a list of all relevant parameters for acceptance purposes.
2. Export settings to a file: Export the current device settings to a file. Suitable for transfer to another device in the same series – excluding device-specific parameters (e.g. static IP address).
3. Restart installation wizard: Restart the installation wizard if necessary.

⇨ The initial start-up is now complete. Define access to the device(s) and connect the device to the grid via the user area (“Connect Grid”).

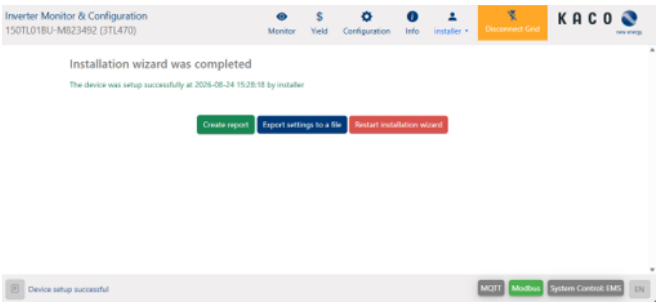

Fig. 49: Complete the initial start-up using the installation wizard

9.2 Signal elements

The 3 LEDs on the device indicate the different operating states. The LEDs can assume the following states:

 LED lights up

 LED flashes

 LED does not light up

EN

Operating state	LED status	Description
		
Start		The green "Operation" LED lights up when AC voltage is present, regardless of the DC voltage. If the LED flashes, internal communication between the components is being established. Once the LED stops flashing, the device is ready for grid feed-in. If the LED continues to flash continuously, internal communication is disrupted.
Start of grid feed-in		The green "Operation" LED lights up. The green "Grid operation" LED lights up after the country-specific waiting time* has elapsed. Ready for grid operation. The charging/discharging power is displayed via the web interface. The coupling switch / interface switch audibly closes.
Grid feed-in operation with reduced power		The green "Operation" LED lights up. The green "Grid operation" LED flashes because one of the following modes is active: internal power reduction, external power reduction, reactive power request or island operation. Ready for grid operation. The charging/discharging power is displayed via the web interface. The coupling switch / interface switch audibly closes.
No grid operation		The green "Operation" LED lights up.
Fault		No LED lights up. Fault in the device or AC/DC source
Fault		The red "Fault" LED lights up. Fault in the AC/DC source Conditional special cases: – No DC voltage is present (e.g. DC disconnect switch open) – DC voltage too low (<start voltage) – DC voltage is present (>start voltage), but the communication connection between the frontend (operating unit) and backend (control unit) is disrupted or interrupted.

The 3 LEDs also signal the **firmware update process** when a USB stick is inserted. The LEDs can assume other states for this purpose:

 LED flashes rapidly

 LED flashes slowly

 LED flashes alternating

Operating status	LED status	Description
		
Procedure in progress		The green "Operating" LED is lit when the device is ready for use. **Note**: When updating via the web server and a USB stick is inserted in parallel, the device remains inactive until the USB stick is removed or then performs a reset and restarts.
Procedure has commenced (initialisation).	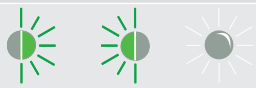	The green "Operating" LED and the green "Feed-in" LED are flashing **quickly yet alternately**.

EN

Operating status	LED status	Description
		Note: The procedure will last up to 5 min for firmware updates or up to 30 secs for parameter updates.
Process is initiated (update)		The green "Operating" LED and the green "Feed-in" LED are flashing **quickly**.
Procedure completed successfully.		The green "Operating" LED and the green "Feed-in" LED are flashing **slowly and in tandem**. **Note**: Check the new SW version via the web interface .
Fault		The red "Fault" LED is **flashing slowly**. **Note**: The procedure has not been completed successfully or a time limit has elapsed. **Important:** If the USB stick is removed during the initialisation phase, a device fault is triggered. Inserting the USB stick initiates a device re-start.
No fault		No fault present.

9.3 User interface

NOTE

Tolerance of displayed measured values

The values for the condition of the battery connected are transmitted from the EMS directly. We cannot provide any guarantee that these values are correct.

EN



Fig. 50: Monitoring interface

Area	Description
Basic layout – 1st tab	Display of the current reactive power factor Display of the current power
Basic layout – 2nd tab	Display of the AC and DC voltages
Basic layout – 3rd tab	Current measured values with export function

Tab. 3: Description of the areas

EN

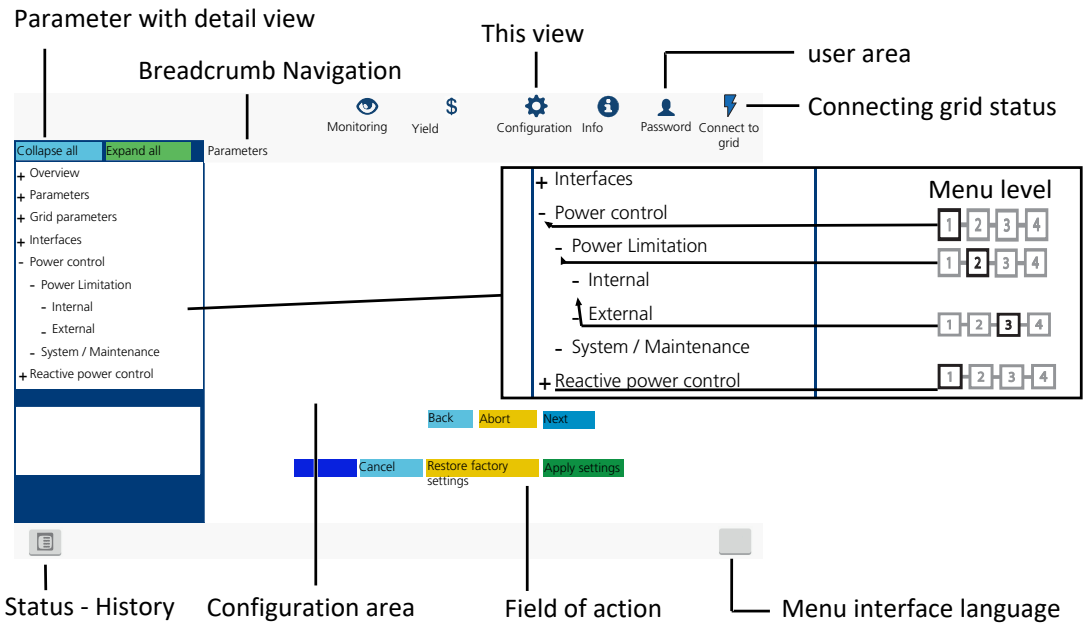

Fig. 51: Parameter configuration interface

Area	Description
Menu bar Toolbar	Menus and commands for operating the interface.
Application area	Display of parameter values, graphs or input options according to the selected view, function and parameters.
Navigation area	Display of the user level and error messages. Selection of connected interfaces. Selection of devices connected to the interface. Selection of functions according to the selected parameter.

Tab. 4: Description of the areas

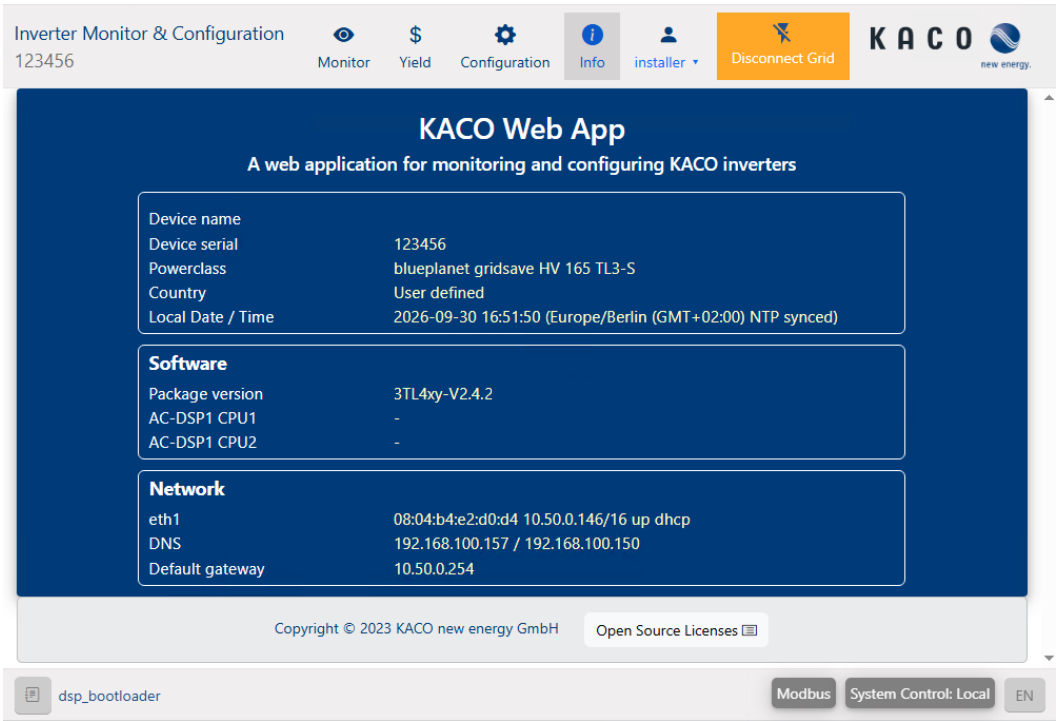

Fig. 52: Device and hardware interface

EN

Area	Description
Device	Display of the serial number, device name, grid type, local installation location and time
Software	Display of the installed firmware package
Network	Display of the current network parameters

Tab. 5: Description of the areas

9.4 Menu structure

NOTE

Use of a suitable web browser

We recommend using an up-to-date Firefox or Chrome browser or the default browser that is available on the mobile terminal devices to configure the device via the web interface.

Symbols used

1 2 3 4	Menu level (0,1,2,3)		Password-protected menu (password can be requested from KACO customer service)
	Submenu		
INSTALLER	Setting only in Installer interface	SERVICE	Setting only in Service interface
	Display		Option box
			Setting range
	Option menu		Default value
			Interval

9.4.1 Yield via web user interface

Country-spec. Settings	Level	Display/ Setting	Action in this menu/meaning
	1 2 3 4	Daily view	Displays the recorded operating data graphically. ☞ Select a day. ⇨ The web interface shows the selected data.
	1 2 3 4	Weekly view	**NOTE: Displays the recorded operating data graphically.** ☞ Select a week. ⇨ The web interface shows the selected data.
	1 2 3 4	Month display	Displays the recorded operating data graphically. ☞ Select a month. ⇨ The web interface shows the selected data.
	1 2 3 4	Yearly view	Displays the recorded operating data graphically. ☞ Select a year. ⇨ The web interface shows the selected data.
	1 2 3 4	Export / print Print PNG | PDF | JPEG | SVG | GIF	**NOTE: Opportunity to print out or save the chart.** 1. Select an output format. 2. Specify the storage location.

EN

9.4.2 Configuration via web user interface

Country-spec. Settings	Level	Display/ Setting	Action in this menu/meaning
		Overview	Input screens for basic settings
		Localization Status	1. Select the required language for the user interface. 2. Select the current date and enter the time or press the “Sync with client device now” button. 3. Select a time zone. 4. Specify the temperature unit. 5. Enter the device name. 6. Enter the plant ID. 7. Confirm the action field.
		AC Settings	Input screens for grid parameters.
		Country & Grid type	**NOTE: This option influences the country-specific operating settings of the device. Please consult KACO Service for further information.** 1. Select country and grid type. 2. Observe the note for [See section 9.4.2 Page 73]
		Nominal grid voltage & Nominal grid frequency Status	☞ Specify optional nominal grid voltage. **NOTE: The device switches off if the grid frequency deviates from the nominal grid voltage by more than 9.5Hz.** 1. Select optional nominal grid frequency. 2. Confirm the action field.
INSTALLER		Trip Settings	**NOTE: Activate shutdown according to generic parameters, frequency or voltage.**
		Generic parameters	**NOTE: Opportunity to activate standard protective shutdown**
		Trip with intentional delay Check to enable	1. If necessary, activate delayed trip-off. 2. Confirm the action field.

EN

Country-spec. Settings	Level	Display/ Setting	Action in this menu/meaning
	1 2 3 4	Frequency	**NOTE: Option to monitor frequency shutdown**
	1 2 3 4	Trip underfrequency monitoring Status	☞ Activate if necessary. **NOTE: If the grid voltage falls below 20% Un, the underfrequency monitoring is deactivated.**
	1 2 3 4	Number of trip underfrequency levels 1 – 5 / 1 / 1	☞ Specify the number of support levels.
	1 2 3 4	Trip underfrequency level 1 45 – 65 [Hz] / [Hz] / 0.01 Trip underfrequency time level 1 [ms] / [ms] / 1	**NOTE: If the grid frequency is within the deactivation range for the duration of the deactivation time, then the function is deactivated.** ☞ Define range and trip-off time.
	1 2 3 4	Trip underfrequency level 2 – 5 42.5 – 65 [Hz] / [Hz] / 0.01 Trip underfrequency time level 2 – 5 [ms] / [ms] / 1	
	1 2 3 4	Trip overfrequency monitoring Status	☞ Activate if necessary.
	1 2 3 4	Number of trip overfrequency levels 1 – 5 / 2 / 1	☞ Specify the number of support levels.
	1 2 3 4	Trip overfrequency level 1 45 – 66 [Hz] / [Hz] / 0.01 Trip overfrequency time level 1 0 – [ms] / [ms] / 1	**NOTE: If the grid frequency is within the deactivation range for the duration of the deactivation time, then the function is deactivated.** 1. Define range and trip-off time. 2. Confirm the action field.
	1 2 3 4	Trip overfrequency level 2 – 5 45– 66 [Hz] / [Hz] / 0.01 Trip overfrequency time level 2 – 5 0 – [ms] / [ms] / 1	

EN

Country-spec. Settings	Level	Display/ Setting	Action in this menu/meaning
		Voltage	**NOTE: Option to monitor the voltage shutdown**
		Trip undervoltage monitoring Status	☞ Activate if necessary.
		Number of trip undervoltage levels 1 – 5 / 2 / 1	☞ Specify the number of support levels.
		Trip undervoltage level 1 " " [% U_{nom}] / " " [% U_{nom}] / 0.1 Trip undervoltage time level 1 " " [ms] / " " [ms] / 1	☞ Define range and trip-off time.
		Trip undervoltage level 2 – 5 " " [% U_{nom}] / " " [% U_{nom}] / 0.1 Trip undervoltage time level 2 – 5 " " [ms] / " " [ms] / 1	
		Trip overvoltage monitoring Status	☞ Activate if necessary.
		Number of trip overvoltage levels 1 – 5 / 2 / 1	☞ Specify the number of support levels.
		Trip overvoltage level 1 10 – 100 [% U_{nom}] / [% U_{nom}] / 0.1 Trip overvoltage time level 1 0 – [ms] / [ms] / 1	1. Define range and trip-off time. 2. Confirm the action field.
		Trip overvoltage level 2 – 5 100 – 130 [% U_{nom}] [% U_{nom}] / 0.1 Trip overvoltage time level 2 to 5 0 – [ms] / [ms] / 1	
		10 min. average	**NOTE: Monitoring of a variation in the average voltage value of 10 minutes.** ☞ Activate if necessary.
		Monitoring 10 minute average grid voltage Status 10 minutes average 100 – 125 [% Unom] / 125.0 0,1 %	☞ Set the voltage in % via averaging..
INSTALLER		Trip Settings Backup Mode	**NOTE: Enable shutdown based on generic parameters, frequency, or voltage.**

EN

Country-spec. Settings	Level	Display/ Setting	Action in this menu/meaning
		Generic parameters	**NOTE: Opportunity to activate standard protective shut-down**
		Trip with intentional delay Check to enable	1. If necessary, activate delayed trip-off. 2. Confirm the action field.
		Frequency	**NOTE: Option to monitor frequency shutdown**
		Trip underfrequency monitoring Status	☞ Activate if necessary. **NOTE: If the grid voltage falls below 20% Un, the underfrequency monitoring is deactivated.**
		Trip underfrequency level 1 45 – 65 [Hz] / [Hz] / 0.01 Trip underfrequency time level 1 0 – [ms] / [ms] / 1	**NOTE: If the grid frequency is within the deactivation range for the duration of the deactivation time, then the function is deactivated.** ☞ Define range and trip-off time.
		Trip overfrequency monitoring Status	☞ Activate if necessary.
		Trip overfrequency level 1 45 – 65 [Hz] / [Hz] / 0.01 Trip overfrequency time level 1 0 – [ms] / [ms] / 1	**NOTE: If the grid frequency is within the deactivation range for the duration of the deactivation time, then the function is deactivated.** 1. Define range and trip-off time. 2. Confirm the action field.
		Voltage	**NOTE: Option to monitor the voltage shutdown**
		Trip undervoltage monitoring Status	☞ Activate if necessary.
		Trip undervoltage level 1 10 – [% U_{nom}] / [% U_{nom}] / 0.1 Trip undervoltage time level 1 0 – [ms] / [ms] / 1	☞ Define range and trip-off time.
		Trip overvoltage monitoring Status	☞ Activate if necessary.
		Trip overvoltage level 1 100 – [% U_{nom}] / [% U_{nom}] / 0.1 Trip overvoltage time level 1 0 – [ms] / [ms] / 1	1. Define range and trip-off time. 2. Confirm the action field.
		Island Detection	**NOTE: This is a protective function for grid-parallel operation.**
		Mode Off / ROCOF / ROCOF enhanced	**NOTE: For more information about the operating modes, see** [See section 10.5 Page 97] 1. Select the operating mode and observe the menu entries. 2. Enable password protection if required. 3. Confirm the action field.
		ROCOF	☞ Activate passive grid influence by application of a frequency.

EN

Country-spec. Settings	Level	Display/ Setting		Action in this menu/meaning
	1 2 3 4	ROCOF threshold stage 1 value ⚙ 0.1 – 6.0 [Hz / s] / 0.1 ROCOF threshold stage 2 value ⚙ 0.1 – 6.0 [Hz / s] / 0.1		☞ Define threshold for ROCOF.
		ROCOF threshold stage 1 time ⚙ 100 – 5000 [ms] / 0.1 ROCOF threshold stage 2 time ⚙ 100 – 5000 [ms] / 0.1		☞ Define time value for ROCOF.
	1 2 3 4	ROCOF enhanced		**NOTE: Active detection after exceeding the first frequency threshold.**
	1 2 3 4	ROCOF threshold stage 1 value ⚙ 0.1 – 6.0 [Hz / s] / 0.1 ROCOF threshold stage 2 value ⚙ 0.1 – 6.0 [Hz / s] / 0.1		☞ Define threshold for ROCOF.
		ROCOF threshold stage 1 time ⚙ 100 – 5000 [ms] / 0.1 ROCOF threshold stage 2 time ⚙ 100 – 5000 [ms] / 0.1		☞ Define time value for ROCOF.
	1 2 3 4	ROCOF proportionality factor ⚙ -5000 – 5000 [‰ / Hz / s] / ◦ -20 / 1 ☑ Status		1. Define the proportionality factor. 2. Confirm the action field.
	1 2 3 4	Pulse period repetition time ⚙ 40 – 6000 [ms] / ◦ 1000 [ms] / 1 [ms]		☞ Define period for detection.
	1 2 3 4	Ramp Rate Limitation		**NOTE: Opportunity to limit power in the case of an increasing and decreasing nominal power/maximum power.**
		Operation mode ☑ On | Off		☞ Select operation mode.
		Increasing gradient & Decreasing gradient ⚙ 1 – 65534 [%/min] / ◦ 65534 / 1		☞ Set gradient. This percentage relates to the nominal power/maximum power. ☞ Confirm the action field.

EN

Country-spec. Settings	Level	Display/ Setting	Action in this menu/meaning
	1 2 3 4	Connection Conditions	**NOTE: The exact connection conditions must be set according to the grid conditions.**
	1 2 3 4	Min. conn. voltage after grid mon. 10 – 110 [% Unom] / 94.8 / 0.1 & Max. conn. voltage after grid mon. 90 – 125 [% Unom] / 110.0 / 0.1	☞ Define the connection voltage range after a grid fault.
	1 2 3 4	Min. conn. frequency after grid mon. 45 – 65 [Hz] / 47.5 / 0.01 & Max. conn. frequency after grid mon. 45 – 65 [Hz] / 50.05 / 0.01	☞ Define the connection frequency range after a grid fault.
	1 2 3 4	Min. conn. voltage after grid failure 10 – 110 [% Unom] / 94.8 / 0.1 & Max conn. voltage after grid failure 90 – 125 [% Unom] / 110.0 / 0.1	☞ Define the connection voltage range after a grid fault.
	1 2 3 4	Min. conn. frequency after grid failure 45 – 65 [Hz] / 47.50 / 0.01 & Max. conn. frequency after grid failure 45 – 65 [Hz] / 50.05 / 0.01	☞ Define the connection frequency range after a grid fault.
	1 2 3 4	DC input voltage monitoring time 1000 - 1800000 [ms] / 60000 / 1000	☞ Set the DC input voltage monitoring time.
	1 2 3 4	Monitoring time PV voltage 1000 - 1800000 [ms] / 60000 / 1000 **&** Monitoring time grid voltage 1000 - 1800000 [ms] / 60000 / 1000 **&**	☞ Define the monitoring time for the grid voltage (and PV voltage).
	1 2 3 4	Waiting time after grid failure 1000 - 1800000 [ms] / 60000 / 1000 Status	1. Set the waiting time after a grid fault. 2. Optionally enable password protection. 3. Confirm the action field.

EN

Country-spec. Settings	Level	Display/ Setting	Action in this menu/meaning
	1 2 3 4	Ground fault protection	**NOTE: Possibility for monitoring a single device connected to the battery.** **NOTE: This function must not be activated in parallel operation, because an ISO measurement will be falsified by parallel devices and AFI can be falsely triggered by circulating currents.**
		Off | On	☞ Activate or deactivate earth fault monitoring.
INSTALLER	1 2 3 4	Active Power Control	**NOTE: The output power of the device can be set permanently to a lower value than the maximum output power via the active power regulation.**
	1 2 3 4	Internal	**NOTE: Option for internal power limitation as required by the grid operator to limit the maximum power rating of the system at the grid connection point. More detailed information at:** [See section 10.4.1 Page 95]
	1 2 3 4	Power Limitation Check to enable	☞ Specify the activation status.
	1 2 3 4	Maximum apparent power Slim 1000 - 125000 / [See section 4 Page 16] [VA] / 0.1 [VA]	**NOTE: The max. apparent power limits the internal power of the device.** ☞ Enter the value or set the value using the slider.
	1 2 3 4	Maximum active power Plim 1.0 – 100.0 [% Slim] / 100[% Slim] / 0.1	**NOTE: The max. active power limits the internal power of the device.** ☞ Enter the value or set the value using the slider.

EN

Country-spec. Settings	Level	Display/ Setting	Action in this menu/meaning
		External	**NOTE: The parameters set here are used if no valid external power or reactive power setpoints are received via the communication interface or if communication fails for the set fallback time.** **NOTE: A communication failure has occurred if no valid "Enable" signal or no updated external setpoint is received within the set fallback time.**
		Power Limitation ☑☰ Check to enable	☞ Specify the activation status. **NOTE: If the function is activated, external specifications for active power are taken into account and set to defined fallback values in the event of a fault.** **NOTE: If the function is deactivated, there is no automatic power fallback in the event of a communication failure**
		AC fallback active power ⚙ 0 – 100 [%Plim] / ◦ 100 [%Plim] / ◓ 1	☞ Set fallback power. **NOTE: Defines the active power to which the device reverts in the event of a communication failure.** **NOTE: If no valid external setpoint is received within the configured fallback time, the power is limited to the configured fallback power.** **NOTE: The fallback power is used taking into account other active limitations (e.g. mains-side limit values or device protection functions).**
		Fallback time ⚙ 0 – 43200 [s] / ◦ 300 [s] / ◓ 1	☞ Set the fallback time for the external power specification. **WARNING! After the set fallback time has elapsed without a valid external specification, external setpoints for cos-phi, Q and P are set to the configured fallback values (cos-phi constant, Q-constant or AC active fallback power), respectively. During the fallback time, the device operates with the last valid setpoint that was received.** **WARNING! If the fallback time is set to 0 s, external specifications are not reset (continued operation with last received setpoint).** **WARNING! The fallback time is set for each valid external telegram.**
		Fallback gradient limitation increase & Fallback gradient limitation decrease ⚙ 1 – 65534 [% Slim / min] / ◦ 65534 [% Slim / min] / ◓ 1	☞ Set the gradient limit for the transition to the fallback power. **NOTE: Limits the maximum rate of change of active power to the fallback power in the event of a power increase.** **NOTE: If the value is set to 65534, there is no separate gradient limitation at the transition to fallback power**
		Fallback settling time (3 Tau) ⚙ 120 – 36000 [ms] / ◦ 600 [ms] / ◓ 10	☞ Set the settling time in the event of an abrupt change in the fallback value.
		Output gradient limitation increase & Output gradient limitation decrease ⚙ 1 – 65534 [% Slim / min] / ◦ 65534 [% Slim / min] / ◓ 1	☞ Set maximum power increase. **NOTE: Limits the maximum rate of change for power increases in normal operation and when returning from the fallback power to external specifications.** ☞ Set gradient limitation for the fallback case. **NOTE: If the value is set to 65534, there is no separate ramp limitation for the fallback case.**

EN

Country-spec. Settings	Level	Display/ Setting	Action in this menu/meaning
	1 2 3 4	Settling time (3 Tau) ⚙ 120 – 36000 [ms] / ◦ [ms] / 10 Status	**NOTE: The displayed value refers to 3 Tau according to the current standards.** This setting only affects the display of the transient behaviour. The actual control behaviour of the device remains unchanged. 1. Specify the settling time. 2. Confirm the action field.
	1 2 3 4	Frequency Sensitive Mode (FSM)	**NOTE: Used to stabilise the grid frequency after a fault.** **NOTE: Automatically reacts to frequency deviations from the nominal value, thereby supporting grid stability and security of supply.**
	1 2 3 4	Gradient under frequency level 1 ⚙ 0 – 500 (% Pnom / Hz) ◦ 50 (% Pnom / Hz) Gradient under frequency level 2 ⚙ 0 – 500 (% Pnom / Hz) ◦ 50 (% Pnom / Hz)	☞ Gradient for calculating the active power setpoint as a function of the current frequency for underfrequency events.
		Gradient over frequency level 1 ⚙ 0 – 500 (% Pnom / Hz) ◦ 50 (% Pnom / Hz) Gradient over frequency level 2 ⚙ 0 – 500 (% Pnom / Hz) ◦ 50 (% Pnom / Hz)	☞ Gradient for calculating the active power setpoint as a function of the current frequency for overfrequency events.
	1 2 3 4	Activation threshold under frequency level 1 ⚙ 48 – 50 Hz ◦ 49.995 Hz Activation threshold under frequency level 2 ⚙ 48 – 50 Hz ◦ 49.995 Hz	☞ Frequency threshold below which (falling edge) the function or – if configured – the deliberate delay timer is activated. If the value rises above this (rising edge) and there is no configured stop frequency, the function is deactivated.
		Activation threshold over frequency level 1 ⚙ 50 – 52 Hz ◦ 50.005 Hz Activation threshold over frequency level 2 ⚙ 50 – 52 Hz ◦ 50.005 Hz	☞ Frequency threshold above which (rising edge) the function or – if configured – the deliberate delay timer is activated. If the value falls below this (falling edge), the function is deactivated.
	1 2 3 4	Activation delay time ⚙ [ms] / ◦ 0 [ms] / 1	☞ Set the control delay. **NOTE: Time delay for activating the function after the activation frequency threshold has been exceeded in the case of overfrequency events with a rising edge or underfrequency events with a falling edge.**
	1 2 3 4	Output gradient limitation increase ⚙ 0 – 65534 (%/min) ◦ 65534 (%/min) Output gradient limitation decrease ⚙ ⚙ 0 – 65534 (%/min) ◦ 65534 (%/min)	1. The rate of change of the output power is limited by the configured value when the output power is increased. 2. The rate of change of the output power when the output power is reduced is limited by the configured value.

EN

Country-spec. Settings	Level	Display/ Setting	Action in this menu/meaning
		Settling time (3 Tau) 120 – 13200 [ms] / [ms] / 10	Set the settling time in the event of an abrupt change in the rated power target value.
		Frequency response insensitivity 0 – 50 [mHz] / 10 [mHz] / 1	**NOTE: Frequency change that does not trigger a power adjustment. The insensitivity is ± the last active frequency point on the characteristic curve.** mHz define.
		P(f)	**NOTE: Activate frequency-dependent power reduction in the P(f) menu.**
Not for IL, IT		Operation mode Off | Mode 1 | Mode 2 | Mode 3	Specify the operation mode. **NOTE: Mode 1 = Hysteresis active – Limit; Mode 2 = Hysteresis inactive – Limit; Mode 3 = Hysteresis inactive – Set**
		Power reference at underfrequency Actual power | Nominal power Power reference at overfrequency Actual power | Nominal power	1. Specify control method with underfrequency. 2. Specify control method with overfrequency.
		Dynamic gradient mode On | Off	Activate dynamic gradient. **NOTE: Gradient "Feed-in/charging with over/under frequency" is not displayed.**
		Minimum frequency for dynamic gradient 40 – 50 [Hz] / 0.01 [Hz] Maximum frequency for dynamic gradient 50 – 60 [Hz] / 0.01 [Hz]	Specify dynamic gradient frequency in Hz.
		Gradient at overfrequency (feed-in) 0 – 200 (%/Hz) 40 (%/Hz) Gradient at underfrequency (feed-in) 0 – 200 (%/Hz) 40 (%/Hz)	1. Specify gradient for feed-in with overfrequency. 2. Specify gradient for feed-in with underfrequency.
		Gradient at overfrequency (charging) 0 – 200 (%/Hz) ; 40 (%/Hz) Gradient at underfrequency (charging) 0 – 200 (%/Hz) ; 40 (%/Hz)	1. Specify gradient for charging with overfrequency. 2. Specify gradient for charging with underfrequency.
		Activation threshold at underfrequency 40 – 50 [Hz] / 0.01 [Hz] Activation threshold at overfrequency 50 – 60 [Hz] 0.01 [Hz]	1. Set the frequency thresholds for activating the power limitation with undervoltage. 2. Set frequency thresholds for activating the power limitation with overvoltage.

EN

Country-spec. Settings	Level	Display/ Setting	Action in this menu/meaning
	1 2 3 4	Gradient on falling frequency ⚙ 0 – 200 [% Pref/ Hz] / ◦ 40 [% Pref/ Hz] / ◓ 1	☞ Specify gradient in the case of a decreasing frequency as a ‰ (per thousand) / minute (if mode "1" or mode "2" is active).
Not for IL, IT	1 3 4	Deactivation time ⚙ 0 – 6000000 [ms] / ◦ 0 [ms] / ◓ 1 [ms]	☞ Specify time for power reduction (if mode 1 is active).
	1 3 4	Deactivation gradient ⚙ 0 – 65534 [% Smax / min] / ◦ 10 / ◓ 1	☞ Determine the deactivation gradient.
	1 3 4	Intentional delay ⚙ 0 – 5000 [ms] / ◦ 0 [ms] / ◓ 1	☞ Set the power limitation delay.
	1 3 4	Deactivation range lower limit ⚙ 45 – 61.5 [Hz] / ◓ 0.01 & Deactivation range upper limit ⚙ 45 – 70 [Hz] / ◓ 0.01	☞ Set the lower and upper deactivation range in Hz. **NOTE: Only evaluated in mode 1.** The function is deactivated if the frequency returns to the range between the minimum and maximum deactivation threshold and remains in this range for the duration of the deactivation time.
	1 3 4	Activation delay time ⚙ [ms] / ◦ 0 [ms] / ◓ 1	☞ Set the control delay. **NOTE: Time delay for activating the function after the activation frequency threshold has been exceeded in the case of overfrequency events with a rising edge or underfrequency events with a falling edge.**
	1 3 4	Output gradient limitation increase & Output gradient limitation decrease ⚙ 1 – 65534 [% P_{lim} / min] / ◦ 65534 [% P_{lim} / min] / ◓ 1	☞ Specify the increasing and decreasing output gradient.
	1 3 4	Settling time (3 Tau) ⚙ 120 – 36000 [ms] / ◦ [ms] / ◓ 10 ☑ Status	**NOTE: The displayed value refers to 3 Tau according to the current standards.** This setting only affects the display of the transient behaviour. The actual control behaviour of the device remains unchanged. 1. Specify the settling time. 2. Confirm the action field.
	1 3 4	Deact. lim. time after fault ⚙ 0 – 1000 [s] / ◦ 0 [ms] / ◓ 1000 [s]	☞ After the end of the fault, the change in active power is limited to the set gradient for the specified time. **NOTE: Only evaluated in mode 2&3.**
	1 3 4	Deact. grad. incr. after fault & Deact. grad. decr. after fault ⚙ 0 – 65534 [% / min] / ◦ 10 [% / min] / ◓ 1	☞ Limits the change in active power after the end of the fault. **NOTE: Only evaluated in mode 3.**
	1 3 4	Deactivation delay ⚙ 0 – 500 [ms] / ◦ 0 [ms] / ◓ 1	☞ Set the control delay. **NOTE: Time delay for deactivating the function after the activation frequency threshold has been exceeded on a rising edge during overfrequency events or on a falling edge during underfrequency events.** **NOTE: Evaluated only in modes 2 & 3.**

EN

Country-spec. Settings	Level	Display/ Setting	Action in this menu/meaning
		P(U)	**NOTE: Activate voltage-dependent power reduction in the P(U) menu.**
		Operation mode Off | On	☞ Activate the control process. **Off**: Deactivates dynamic grid support using dynamic reactive current. Dynamic grid support remains active on account of immunity to interference.
		Reference power Actual power | Nominal power	☞ Select the power-dependent control method.
		Evaluated voltage Maximum phase voltage | Positive sequence voltage	☞ Select the voltage to be rated. Specifies which voltage is evaluated in a three-phase system.
		Hysteresis mode Off | On	**NOTE: Hysteresis mode affects the shutdown response of P(U).** ☞ Activate the mode.
		Deactivation gradient 0 – 65534 [%P_{mom} / min] / 65534 [% / min] / 1	☞ Set the gradients for the power limitation.
		Deactivation time 0 – 60000000 [ms] / 0 [ms] / 1000 [ms]	☞ Specify the time for voltage reduction.
		Output gradient limitation increase & Output gradient limitation decrease 1 – 65534 [% P_{lim} / min] / 65534 [% P_{lim} / min] / 1	☞ Specify the increasing and decreasing output gradient.
		Settling time (3 Tau) 120 – 180000 [ms] / [ms] / 10	☞ Set the settling time in the event of an abrupt change in the rated power target value.
		Priority mode P(f) Priority | P(U) Priority	☞ Set priority.
		Active curve 1 - 5	☞ Select active curve. **NOTE: Up to 5 characteristic curves can be configured independently and one of them can be activated for regulation each time.**
		Number of nodes 2 – 5	☞ Specify the number of nodes.
		Power 0.0 – 100.0 [% Pref] / 100 [% Pref] / 1	☞ Specify power for 1st, 5th ... node as a percentage of the maximum power.
		Voltage 80.0 – 125.0 [%Unom] / 112 / 0.1	1. Specify voltage for 1st, 5th ... node as a percentage of the maximum voltage. 2. Confirm the action field.
		Status	

EN

Country-spec. Settings	Level	Display/ Setting	Action in this menu/meaning
	2	Power Rampup	**NOTE: The power ramp allows the power to be increased gradually. For more information, see** [See section 10.4.2 Page 96]
	2	Power rampup gradient 1 – 3000 [% / min] / 10 [% / min] / 1	☞ Set the slope.
	3	Power rampup gradient charge 1 – 600 [% / min] / 10 [% / min] / 1	☞ Set increase.
	3	Rampup on every connect Rampup on first connect Rampup after grid failure Check to enable	1. Activate option. 2. Confirm the action field.
INSTALLER	2	Reactive power control	**NOTE: Activate the reactive power process in the mode menu. More detailed information at:** [See section 10.1 Page 76]
	3	Mode Specification cos-phi | Specification Q | Cos-phi(P/Plim) | Q(U) | Q(P)	1. Select a control process. 2. Confirm the action field.
	3	Cos-phi constant	**NOTE: Define the cos ϕ constant.**
	4	Cos-phi constant 0,3 – 1 / 1 / 0,001	☞ Determine the specified power factor.
	4	Power gradient increase & Power gradient decrease 1 – 65534 [% P_{lim} / min] / 65534 [% P_{lim} / min] / 1	1. Maximum change in the reactive power %P_{lim}/min in the event of a change to overexcited mode. 2. Maximum change in the reactive power %P_{lim}/min in the event of a change to underexcited mode.
	4	Settling time (3 Tau) 600 – [ms] / 600 [ms] / 10	1. Set the settling time in the event of an abrupt change in the reactive power target value (e.g. caused by a voltage jump). 2. Confirm the action field.
	3	Q constant	**NOTE: Define the Q constant.**
	4	Priority mode Q-Priority | P-Priority	☞ Set priority.
	4	Q constant 0 – 100 [% Slim] / 0 [% Slim] / 0.1	☞ Set the idle power Q to a fixed value.
		underexcited | overexcited	☞ Select the type of phase shift. **NOTE: Underexcited relates to inductive load, overexcited relates to capacitive load.**
	4	Output gradient limitation increase & Output gradient limitation decrease 1 – 65534 [% P_{lim} / min] / 65534 [% P_{lim} / min] / 1	1. Maximum change in the reactive power %P_{lim}/min in the event of a change to overexcited mode. 2. Maximum change in the reactive power %P_{lim}/min in the event of a change to underexcited mode.

EN

Country-spec. Settings	Level	Display/ Setting	Action in this menu/meaning
		Settling time (3 Tau) 600 – [ms] / 600 [ms] / 10	1. Set the settling time in the event of an abrupt change in the reactive power target value (e.g. caused by a voltage jump). 2. Confirm the action field.
		Cos-phi(P)	**NOTE: Define the cos ϕ (P).**
		Lock-In voltage 10 – 126.6 [% Unom] / 80 [% Unom] / 0.1	☞ Set the voltage above which control is activated.
		Lock-Out voltage 10 – 126.6 [% Unom] / 80 [% Unom] / 0.1	☞ Set the voltage below which control is deactivated.
		Power gradient increase & Power gradient decrease 1 – 65534 [% P_{lim} / min] / 65534 [% P_{lim} / min] / 1	1. Maximum change in the reactive power %P_{lim}/min in the event of a change to overexcited mode. 2. Maximum change in the reactive power %P_{lim}/min in the event of a change to underexcited mode.
		Settling time (3 Tau) 600 – [ms] / 600 [ms] / 10	1. Set the settling time in the event of an abrupt change in the reactive power target value (e.g. caused by a voltage jump). 2. Confirm the action field.
		Number of nodes 2 - 10	**NOTE: The maximum number of configurable nodes depends on the selected grid type.** ☞ Specify the number of nodes.
		Node 1- Node 10 Power Curve 1 0 – 100 [% Slim] / 0, 50, 100% [% Slim] / 1	☞ Power factor for 1st , 10th … node as a percentage of the maximum power. **NOTE: For the 1st node, the power must be 0%, for the last node the power must be 100%. The power values of the nodes must increase continuously.**
		Cos-phi Curve 1 0.3 – 1 [ind/cap] / 1 / 0.001	☞ Specify the cos ϕ of the node.
		overexcited | underexcited Status	☞ If a reactive power not equal to 1 is selected: Select the type of phase shift. **NOTE: Overexcited relates to a capacitive load, underexcited relates to an inductive load.** ☞ Confirm the action field.
		Q(P)	**NOTE: Define Q(P).**
		Power gradient increase& Power gradient decrease 0 – 65535 [% Slim] / 65535 [% Slim] / 1	☞ Specify the increasing and decreasing power gradient.
		Q(P) Active curve 1 - 10	☞ Select active curve. **NOTE: Up to 10 characteristic curves can be configured independently and one of them can be activated for regulation each time.**
		Settling time (3 Tau) 120 – 180000 [ms] / [ms] / 10	☞ Set the settling time in the event of an abrupt change in the rated power target value.

EN

Country-spec. Settings	Level	Display/ Setting	Action in this menu/meaning
		Number of nodes 2 - 10	**NOTE: The maximum number of configurable nodes depends on the selected grid type.** ☞ Specify the number of nodes.
		Node 1- Node 10 Power Curve 1 0 – 100 [% Slim] / 0, 50, 100% [% Slim] / 1	☞ Power factor for 1st , 10th … node as a percentage of the maximum power. **NOTE: For the 1st node, the power must be 0%, for the last node the power must be 100%. The power values of the nodes must increase continuously.**
		Q – Curve 1 0.3 – 1 [ind/cap] / 1 / 0.001	☞ Define the Q-curve for the node.
		overexcited | underexcited Status	☞ If a reactive power not equal to 1 is selected: Select the type of phase shift. **NOTE: Overexcited relates to a capacitive load, underexcited relates to an inductive load.** ☞ Confirm the action field.
		Q(U)	☞ **NOTE: Define Q(U).**
		Lock-In power 0 – 100 [% Slim] / 20 [% Slim] / 1	☞ Set the active power as a percentage of rated power above which control is activated.
		Evaluated voltage Maximum phase voltage | Positive phase sequence voltage	☞ Select the voltage to be rated. Specifies which voltage is evaluated in a three-phase system.
		Lock-Out power 0-100 [% Slim] / 5 [%Slim] / 1	☞ Set the active power as % of rated power below which control is deactivated.
		Lock-In time 0 – 60000 [ms] / 30000 [ms] / 1000 [ms] Lock-Out time 0 – 60000 [ms] / 30000 [ms] / 1 [ms]	☞ Set the length of time that the active power must remain above the lock-in / lock-out power level before control is activated.
		Dead time 0 -10,000 [ms] / 0 [ms] / 1	☞ Set the intentional delay for the start of the Q(U) function.
		Output gradient limitation increase & Output gradient limitation decrease 1 – 65534 [% P_{lim} / min] / 65534 [% P_{lim} / min] / 1	1. Maximum change in the reactive power %P_{lim}/min in the event of a change to overexcited mode. 2. Maximum change in the reactive power %P_{lim}/min in the event of a change to underexcited mode.
		Settling time (3 Tau) 600 – [ms] / 600 [ms] / 10	1. Set the settling time in the event of an abrupt change in the reactive power target value (e.g. caused by a voltage jump). 2. Confirm the action field.
		Minimum cos-phi Q1 - Minimum cos-phi Q4 0 – 1 / 0 / 0,001	☞ Enter the minimum cos ϕ factor for quadrants 1 and 4.

EN

Country-spec. Settings	Level	Display/ Setting	Action in this menu/meaning
		Voltage dead band 0 – 5 [% Uref] 0.0 0.1	☞ Set voltage dead band in %.
		Q(U) Offset (temporary) U offset -100 -100 [% Slim] / 0.0 [%Slim] / 0.1 Q offset -100 -100 [% Slim] / 0.0 [%Slim] / 0.1	☞ Set the intended Q or U offset for the function. **NOTE: The voltage offset is added to the measured voltage. Accordingly, the sign must be inverted if the curve is shifted.**
		Q minimum 0 – 100 [% Slim] / 0 [% Slim] / 0.1	☞ Set the reactive power Q to a minimum value.
		underexcited | overexcited	☞ Select the type of phase shift. **NOTE: Underexcited relates to inductive load, overexcited relates to capacitive load.**
		Q maximum 0 – 100 [% Slim] / 0 [% Slim] / 0.1	☞ Set the reactive power Q to a maximum value.
		underexcited | overexcited	☞ Select the type of phase shift. **NOTE: Underexcited relates to inductive load, overexcited relates to capacitive load.**
US, UD		Autonomous adjustment Vref Check to enable	☞ When autonomous adjustment is activated, the reference voltage of the reactive power function is adjusted to the measured voltage using a PT1 filter. This dynamically shifts the Q(U) characteristic curve.
US, UD		Time constant Vref adjustment 300 – 5000 [s] 300 s	☞ Set the time constant for adjusting the dynamic reference voltage.
		Active curve 1 – 4	☞ Select active curve. **NOTE: Up to 4 characteristic curves can be configured independently and one of them can be activated for regulation each time.**
		Priority mode Q-Priority | P-Priority	☞ Set priority for reactive power – Q or active power – P. **NOTE: When it comes to P-priority, the reactive power adjustment range is limited subject to the active power that is currently available and fed in.**
		Number of nodes 2 - 10	**NOTE: The maximum number of configurable nodes depends on the selected grid type.** ☞ Specify the number of nodes.
		Node 1- Node 10 Power / Excitation / Voltage 0 – 100 [% Slim] / [% Slim] / 0.1	☞ Set the reactive power of the node as a percentage of the maximum power.
		overexcited | underexcited Status	☞ Select the type of phase shift. **NOTE: Overexcited relates to a capacitive load, underexcited relates to an inductive load.**
		0 – 125.0 [% Unom] / [% Unom] / 0.1 [% Unom]	☞ Enter the voltage of the node in volts. **NOTE: The voltage values of the nodes must increase continuously. At voltages below the 1st node and voltages above the last node, the reactive power value of the 1st or last node is used each time.**

EN

Country-spec. Settings	Level	Display/ Setting		Action in this menu/meaning
	2	Dynamic grid support		**NOTE: The device supports dynamic grid stabilisation.** **More detailed information at:** [See section 10.3 Page 91]
		Operation mode On | Off		☞ Select a control process. **On**: Activates dynamic grid support using dynamic reactive current. **Off**: Deactivates dynamic grid support using dynamic reactive current. Dynamic grid support remains active on account of immunity to interference.
		Setting | Manual |Predefined zero current		☞ Select a control process.
		Priority – Reactive current limitation | Active current priority		☞ Select a control process.
		Constant k positive sequence dip & Constant k positive sequence swell k 0 – 10 2 0.1		☞ Set amplification factor k for the pos. sequence for drop and increase in the grid voltage.
		Constant k negative sequence dip Constant k negative sequence swell k 0 – 10 2 0.1		☞ Set amplification factor k for the neg. sequence for drop and increase in the grid voltage.
		Dead band 2 – 120 [% Uref] 10.0 0.1		☞ Set dead band in %.
		Dynamic reactive current only Off | On		**NOTE: With activated FRT mode, the pre-fault reactive current can be added.** ☞ If necessary, activate pre-fault reactive current.
		Dead band mode Mode 1 | Mode 2		☞ Select dead band mode for the active control process.
		Reference voltage 80.0 – 110.0 [% Unom] 100 0.1		☞ Set reference voltage for the active control process.
		Minimum operating voltage deactivation 0.0 – 100 [% Unom] 0.1 & Maximum operating voltage deactivation 100.0 – 125.0 [% Unom] 0.1		☞ Set voltage range for the active control process.
		Zero current activation undervoltage 0 – [%Unom] 0.1 Zero current activation overvoltage – [% Unom] 0.1		☞ Set voltage threshold for zero current mode. If one or more phase/phase or phase/neutral conductor voltages move below or above the configured threshold, the inverter changes to zero current mode. The total current is regulated to virtually zero.
		Zero current deactivation overvoltage – [% Unom] 0.1 [%]		☞ Set voltage threshold for deactivating the zero current mode in case of overvoltage.

EN

Country-spec. Settings	Level	Display/ Setting	Action in this menu/meaning
		Reactive current limitation 0 – 100 [% Imax] / 100 [% Imax] / 1	☞ Set the reactive power limitation.
		Minimum support time 1000 – [ms] / [ms] 10	☞ Set the minimum support time.
		Deactivation delay 0 – 500 [ms] / 0 [ms] / 1	☞ Set the control delay. **NOTE: Time delay for deactivating the function after the activation frequency threshold has been exceeded on a rising edge during overfrequency events or on a falling edge during underfrequency events.** **NOTE: Evaluated only in modes 2 & 3.**
		Overvoltage protection	**NOTE: Shutdown carried out within a grid cycle.**
		Transient overvoltage protection 114.8 – 127.5 [% Unom] / 127.5 / 0.1 %	1. Set the transient overvoltage protection. 2. Confirm the action field.
		External grid protection disconnection	**NOTE: Opportunity to detect the external grid protection devices**
		External Grid Protection No device | Powador-protect | third-party device	☞ Select device.
		DC Disconnection	**NOTE: If the function is deactivated, a connected Powador-protect and received signal will not trigger an interruption of the DC component.**
		DC disconnection any error	☞ Activate DC disconnection on every fault. This also disconnects the DC supply.
		Powador-protect	**NOTE: Configures the grid shutdown via a Powador protect connected to the "INV OFF" input of the device.**
		Powador-protect operation mode Auto | On | Off	↻ Auto/On: A Powador-protect is operating in the photovoltaic system and is connected to the device at the "INV OFF" input. ☞ Set the operating mode for Powador-protect. **Auto**: The device automatically detects a Powador-protect integrated into the photovoltaic system. **On**: The digital signal of the Powador-protect must be present at the digital input of the device for the device to begin feed-in. **Off**: The device does not check whether a Powador-protect is integrated into the PV plant.
		3rd party device	**NOTE: Configures the grid shutdown via a 3rd party device connected to the digital input of the device**
		3rd party device name	☞ Enter the name of the 3rd party device.
		3rd party device operation mode On | Off	☞ Select operation mode. **On:** The digital signal of the 3rd party device must be on the device's digital input so that the device does not shut down. **Off**: The device does not check whether a 3rd party device is integrated into the PV system.

EN

Country-spec. Settings	Level	Display/ Setting	Action in this menu/meaning
	2 3 4	Droop Controller	**NOTE: Option to configure droop control. The droop controller adjusts the inverter's active and reactive power output depending on frequency and voltage to ensure stable load sharing in the grid or in island operation.**
	3 4	Normalized active power gain ⚙ 0,002 – 0,05 / ◦ 0,01 / ◠ 0,001	☞ Set the gain factor for frequency-dependent active power adjustment. A higher value results in a stronger power change in response to frequency deviations.
	3 4	Filter settling time (frequency) [ms] ⚙ 100 – 2000 [ms] / ◦ 250 [ms] / ◠ 1	☞ Set the time constant of the low-pass filter for frequency measurement. A higher value smooths the measurement more and prevents rapid responses to short-term frequency fluctuations. A lower value enables a faster control response.
	3 4	Normalized reactive power gain ⚙ 0,002 – 0,05 [ms] / ◦ [ms] / ◠ 1	☞ Set the gain factor for voltage-dependent reactive power adjustment. This value determines how strongly the device responds with reactive power to voltage deviations.
	3 4	Filter settling time (voltage)[ms] ⚙ 100 – 2000 [ms] / ◦ 250 [ms] / ◠ 1	☞ Set the time constant of the low-pass filter for voltage measurement. It determines the response speed of the voltage-dependent reactive power control. A higher value dampens the control, while a lower value enables faster adjustment.
INSTALLER	1 2 3 4	DC Settings	Input masks for DC source (PV generator/battery)
	2 3 4	Extended DC voltage range ☑ Active / disabled ◦ disabled	**WARNING! Only use the function to enable the mains connection if the actual battery voltage $U_{DC,ACT}$ is lower than the minimum DC voltage $U_{DC,MIN}$, that is required for the AC mains connection.**
	3 4	Minimum battery voltage ⚙ 668/801/1002/1102 [V] / ◦ [See section 4 Page 16] / ◠ -	**NOTE: The minimum battery voltage is specified automatically in accordance with the country-specific grid code.** ☞ Displays the minimum battery voltage.
	3 4	Maximum battery voltage ◦	☞ Displays the maximum battery voltage.
	2 3 4	Iso.resistance ⚙ 100 – 2000 [kOhm] / ◦ 300 [kOhm] / ◠ 1 [kOhm]	**NOTE: The insulation resistance monitoring is disabled by default.** If enabled under See table : Configuration via web user interface [Page 69], this setting can be configured. ☞ Set the threshold at which the insulation monitoring reports a fault.
	1 2 3 4	Communication	Input screens for configuring the interfaces.
	2 3 4	Ethernet	**NOTE: Opportunity to parametrise the Ethernet interface.**
	3 4	IP Settings	**NOTE: Parametrization of network access.**
	3 4	DHCP ☑ Check to enable	☞ Activate or deactivate DHCP. **On**: Once the DHCP server becomes available, the IP address, subnet mask, gateway and DNS server are automatically applied and the aforementioned menu options are filled out. **Off**: Apply settings manually.
	3 4	IP Address	☞ Allocate a unique IPv4 address in the network.

EN

Country-spec. Settings	Level	Display/ Setting	Action in this menu/meaning
	1 2 3 4	Subnet Mask	☞ Assign a subnet mask.
	1 2 3 4	Default gateway	☞ Enter IPv4 address of the gateway.
	1 2 3 4	DNS server settings via DHCP ☑ Check to enable	☞ Activate or deactivate the DNS server from DHCP. **On**: Once the DHCP server becomes available, the IP address is automatically applied and the aforementioned menu options are filled out. **Off**: Apply settings manually.
	1 2 3 4	Primary DNS & Secondary DNS (optional)	1. Enter IPv4 address of DNS server. 2. Confirm the action field.
	1 2 3 4	Modbus	**NOTE: Opportunity to set the Modbus port.**
	1 2 3 4	Modbus TCP / UDP Modbus TCP/ RTU Activation ☑ Check to enable	☞ Allow Modbus TCP / UDP reading access.
	1 2 3 4	Modbus TCP / UDP Write access ☑ Check to enable	☞ Allow Modbus TCP write access. Enabling the write access allows system critical settings to be changed over Modbus TCP/RTU. Really enable write access? ☞ Confirm the action field.
	1 2 3 4	Modbus TCP / UDP Modbus TCP/ RTU Port	☞ Set network port.
	1 2 **3** 4	NTP	**NOTE: An NTP server receives its accurate time information from a precise time source and makes it available to other devices on the network via the NTP protocol.**
	1 2 3 4	NTP Server ☑ Check to enable	1. Obtain server addresses via DHCP or enter them under NTP Server 1&2. Activate server if necessary. 2. Confirm the action field.
	1 2 3 4	NTP server 1	☞ Enter the server address.
	1 2 3 4	NTP server 2	☞ Enter an alternative server address.
	1 2 3 4	Features / Functions	**NOTE: Input screens for advanced device functions**
	1 **2** 3 4	RCMU / optional **NOTE: The residual current monitoring unit – can only be accessed via the installation wizard**	**NOTE: Function for monitoring residual currents and insulation resistances on the DC side of the device. The integrated RCMU (also known as "AFI") measures the insulation resistance when the device starts up and continuously monitors the residual current during operation. If a fault current is detected, the AC relays are opened and the device displays Prolog status 78 "Resid. current shutdown (AFI)".**
	1 **2** 3 4	RCMU monitoring ☑ Check to enable	☞ Define the activation status of the RCMU monitoring. **NOTE: When the function is active, the residual current on the DC side is continuously monitored in accordance with IEC 62109-2. The shutdown occurs within 0.3 s for a sudden increase of 30 mA, within 0.15 s for 60 mA and within 0.04 s for 150 mA. The threshold value for the insulation resistance is set to 300 kΩ as standard and can be adjusted between 100 and 2000 kΩ.**
	1 **2** 3 4	System Control	**NOTE: Display of the values transmitted by a connected EMS. Controls the device even without EMS.** **NOTE: Default values are active after every device restart.**

EN

Country-spec. Settings	Level	Display/ Setting	Action in this menu/meaning
		Control mode ☑ EMS / local ◦ EMS / active	**NOTE: Changes only affect the selected mode.** ☞ Select EMS or Local mode. **Note:** In EMS mode, the values for Local mode are read-only. In Local mode, the values for Local mode can be changed by Service and the installer.
		Button: Reload ◦ 1 – 10 [sec] 1 [sec] ☑ Repeat: Active	☞ Displayed values: -**cyclically**: every second (default setting) or - **manually** via the Refresh button.
		Power Unit State	**NOTE: View the power unit state**
		Requested state Mode: Off, Standby, Connected	**Connection status:** see in the "SunSpec Information Model Reference KACO" document under Model- 64201 "enum16" and in the integration manual.
		Column: Local	Device reacts to the values set locally via the web interface**.**
		Column: EMS	Device reacts to the values sent by the EMS.
		Column: Active	Device shows the status of the power unit.
		Current status	System status is displayed.
		Buttons in the menu: Device control	**NOTE: Save settings for watchdog, battery limits, P and Q settings.**
		☑ Reset	☞ Reset to default value **or**
		☑ Apply and store	☞ Set value and save **or**
		☑ Apply	☞ Accept parameters for current session.
		Watchdog time	**NOTE: Possibility to monitor the entire system**
		⚙ Local / EMS / Active ◦ 30 [s]	☞ Define time for monitoring the connection.
SERVICE		Battery limits (temporary)	☞ **NOTE: Possibility of testing which battery limits are received by the EMS. This can optionally be set to detect faults.**
		Minimum discharge voltage 0.1	☞ Set minimum discharge voltage.
		Maximum discharge current 0.1	☞ Set maximum discharge voltage.
		Minimum discharge current 0.1	☞ Set minimum discharge current.
		Maximum charge voltage 0.1	☞ Set maximum charge voltage.
		Maximum charge current 0.1	☞ Set maximum charge current.
		Minimum charge current 0.1	☞ Set minimum charge current for the battery.
		Battery limits enabled ⚙ 0 / 1	☞ All set values are transferred and used with 1.
		P Setpoint	**NOTE: Define specification of the active power**
		Active power setpoint ⚙ 0 – 100 [% Pmax]/ ◦ 0 [% Pmax] 0.1	☞ Set active power setpoint.

EN

Country-spec. Settings	Level	Display/ Setting	Action in this menu/meaning
		Power gradient increase & Power gradient decrease 1 – 65534 [% P_{lim} / min] / 65534 [% P_{lim} / min / 1	1. Maximum change in the reactive power %P_{lim}/min in the event of a change to overexcited mode. 2. Maximum change in the reactive power %P_{lim}/min in the event of a change to underexcited mode.
		Settling time (3 Tau) 600 – 72000 [ms] / [ms] / 10	☞ Set the settling time in the event of an abrupt change in the reactive power target value.
		Active power enabled 0 / 1	☞ All set values are transferred and used with 1.
		Q constant	**NOTE: Define the Q constant**
		Reactive power setpoint 0 - 100 [% VarMax] / 0 [% VarMax]/ 0.0	☞ Set the reactive power Q to a fixed value
		Output gradient limitation increase & Output gradient limitation decrease 1 – 65534 [% P_{lim} / min] / 65534 [% P_{lim} / min] / 1	1. Maximum change in the reactive power %P_{lim}/min in the event of a change to overexcited mode. 2. Maximum change in the reactive power %P_{lim}/min in the event of a change to underexcited mode.
		Settling time (3 Tau) 600 – 72000 [ms] / [ms] / 10	☞ Set the settling time in the event of an abrupt change in the reactive power target value.
		Q control mode Off / 0 / 1 / Off	☞ Select reactive power specification. - 0 = no reactive power - 1 = set reactive power to a fixed value
		Reactive power enabled 0 / 1	☞ All set values are transferred and used with 1.
		Relay	**NOTE: Option to configure the fault signal relay [ERR].**
		Relay Positive logic | Negative logic inactive | active	1. Select the type of logic. 2. Select the form of activity. 3. Confirm the action field.
		DC Disconnection	**NOTE: If the function is deactivated, a connected Powador-protect and received signal will not trigger an interruption of the DC component.**
		DC disconnection any error	☞ Activate DC disconnection on every fault. This also disconnects the DC supply.
		EMS Timeout	**NOTE: The menu item is only available in the EMS in the battery.**
		Operation mode ON | OFF	☞ Switch on the function for monitoring the system.
		Time 1 – 600 [s] 30 s	☞ Specify the interruption period by which time the signal must appear.
		Service / Maintenance	**NOTE: Opportunity to perform updates, retrieve service/ parameter data and grant remote access.**

EN

Country-spec. Settings	Level	Display/ Setting	Action in this menu/meaning
	1 2 3 4	Firmware update	**NOTE: Opportunity to update the device. Parameter data are not overwritten when the firmware is updated.**
	1 2 3 4	Instant Update	1. Select and confirm the firmware update file with the "Browse..." button 2. Load the firmware with the "Upload" button. 3. Note: During the entire update process, the AC and DC supply of the inverter must be ensured. A loss of supply may damage the device. Continue with update?
	1 2 3 4	Rollback Update	**NOTE: This function restores the firmware version that was in use prior to the last update. It is not possible to downgrade to any previous firmware version.** 1. Load the previous firmware with the “Upload” button. 2. Note: During the entire update process, the AC and DC supply of the inverter must be ensured. A loss of supply may damage the device. Continue with update?
	1 2 3 4	Export Service Package	**NOTE: Opportunity to send an error log to KACO new energy.** ☞ Press the Export button and send the file to our service staff.
	1 2 3 4	Service Log	**NOTE: Display of all logged installations. You should also add all maintenance activities manually via the "Service" and "Installer" interfaces.** 1. Enter additional service activities (exception: "User" interface). 2. Export service logs, if necessary.
	1 2 3 4	Logging Management	**NOTE: Input screens for log and service data and default settings.**
	1 2 3 4	Analyze Log Data	**NOTE: All measurement data can be transferred to a USB stick by making individual and multiple selections.**
	1 2 3 4	User logs ☑ cosPhi | fac (Hz) | Iac 1 (A) | Iac2 (A) | Iac3 (A) | idc (A) | Qac (var)	1. Select a date in the calendar. 2. Select measurement data from the dropdown field. 3. Update the measurement data. 4. Move the selected measurement data to the storage device or move the data selectively.
	1 2 3 4	Parameter Management	**NOTE: Option to reset set values as well as to import and export specific parameters.**
	1 2 3 4	Factory setting	1. Compare all parameters/ country-specific parameters / network-specific parameters with basic setting value. 2. If necessary, reset parameters using the “Restore” button.
	1 2 3 4	Export Configuration	1. Exporting parameters for device-independent settings / Export all settings. 2. Select the parameters for export into a file or the plant manager.
	1 2 3 4	Import Configuration	1. Select the parameter file using the “Browse” button. 2. Import the parameters using the “Upload” button.
	1 2 3 4	Installation wizard	**NOTE:** The installation wizard is described in the chapter [See section 8.3 Page 38]. When the installation process is complete, the text: Installation wizard was completed appears

EN

Country-spec. Settings	Level	Display/ Setting	Action in this menu/meaning
	1 2 3 4	Network Statistics	**NOTE: Sent and received data packets indicator** ☞ Press Refresh.
INSTALLER	1 2 3 4	Account Management	1. Enter your Username. 2. Enter your new user-defined Password. **NOTE: The following is specific to KACO: Following initial start-up, it is necessary to** Change password
	1 2 3 4	Fan test Off / On	**NOTE: Option to test the built-in fans in test mode.** ☞ Activate test mode to log fan speed. Refresh after switching over. **NOTE:** Do not forget to deactivate test mode when you have finished.
	1 2 3 4	Reboot Device	**NOTE: Transfer safety-related parameters to a storage medium.** ☞ If necessary, re-start the device.

NOTE

Validity for associated certificate according to country settings

With regard to the selection of country settings, KACO new energy attests:

1. that the relevant certificates are only valid if the corresponding country settings have been selected.
2. that all configured grid parameters must be configured in accordance with the requirements of the grid operators.
3. that the configuration of parameters using IEEE 1547: 2003 table 1 is possible but is only permitted if it is requested by the grid operators.

NOTE

Validity of the setting values shown

Settings marked with the "" icon are dependent on the selected country and grid configuration. You can find the settings applicable to your device using the corresponding slider in the web interface.

9.5 Monitoring the device

↻ You have connected the device to your network.

1. When using a DHCP server: Activate DHCP.
2. For manual configuration (DHCP off):
3. Open the Settings/Network menu.
4. Assign a unique IP address.
5. Assign a subnet mask.
6. Assign a gateway.
7. Assign DNS server.
8. Save your settings.

EN

9.6 Performing a firmware update

NOTE

Methods for carrying out firmware updates

Depending on the installation environment, firmware updates can be installed using one of the following methods:

1. from a USB storage device containing the firmware package
2. via Ethernet
3. Before carrying out an update, please ensure that the firmware you are using is **suitable for the relevant device type**.

⚠ CAUTION

Interruption or parallel execution of software updates during an ongoing update process!

An intervention or cancellation during the update can lead to system inconsistencies, loss of function or an inoperable device. In this case, a service call or device replacement may be necessary.

✓ The software update is carried out in several phases and may include automatic system restarts. The system cannot be updated while this is in progress.

1. During the entire software update process, do not start any further updates, do not change any settings, and do not interrupt the process manually. Do not operate the system again until the update is complete.

NOTE

Ensure AC power supply during initial commissioning

Only in this operating state can all components of the device be updated to the latest firmware version.

1. Please note that devices fitted with a PCU are supplied with both AC and DC voltage.

⚠ CAUTION

Damage to the device from incorrect power supply

The update can fail if the power supply is interrupted during the update process. Parts of the software or of the device itself may be damaged.

1. Never disconnect the DC and AC power supply for or during a firmware update.
2. Do not remove the USB stick during a firmware update.

Performing a firmware update

You can upload the current firmware to the devices directly via the web interface. Refer to the menu items under "`Firmware Update`" See table : Configuration via web user interface [▶ Page 72]

The firmware can be found on the website kaco-newenergy.com under `Downloads` / `Software`.

There is the **option** of updating the firmware at the USB socket of the device. Observe the following procedure:

↻ Ensure that the power supply is available.
↻ Observe the signal elements (LEDs) and their states during the process.
↻ Observe the description of the LED states during the process. [See section 9.2 ▶ Page 44]

1. Download the firmware from the KACO website and save it to a FAT32-formatted USB flash drive.
2. Insert the USB flash drive into the USB port on the device.

⇨ If the firmware is validated, the update process starts and is indicated by the flashing status LEDs.

3. When the status LEDs "Operating" and "Feed-in" LED **flash slowly at the same time**, **remove** the USB stick.
4. After a successful update, all 3 LEDs light up briefly several times and the device restarts.
5. Remove the USB flash drive from the USB port.
6. If an error occurs, repeat the update process.

⇨ Update process completed successfully.

You can check to see if the update was successful in the menu:

EN

Displaying the firmware version

☞ Open the Information / SW version menu.

⇨ The device will display the versions and checksums of the software that is currently loaded.

9.6.1 Access to the archive folder

↻ You have already officially registered at mykaco.com. If not, please do so via the mykacocom customer portal.

1. Enter your full e-mail address and password in the login screen.
2. Now check whether you have access to the archive folder shown in the graphic.

⇨ In the archive, you will find all previous firmware and document versions as well as expired certificates for your device.

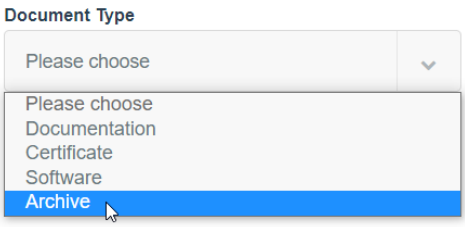

Fig. 53: Archive folder for previous documents

9.7 Access via Modbus

NOTE

Update rate of the Modbus measured values in parallel operation

The measured values provided via Modbus are transmitted with an update rate of approx. **1 second**. The values can also be filtered for stabilisation. This can result in a time delay compared to rapid changes in performance.

In **PV or storage systems with several inverters operated in parallel**, especially if control is only carried out at the **grid connection point**, this delay must be taken into account when designing the higher-level control system.

A suitable external measuring solution may need to be provided for highly dynamic control requirements.

NOTE

Required usage information for remote access

In order to make use of the Modbus functionality, we recommend using the "SunSpec-Modbus-Interface" specification we have made available for the firmware version installed on your device.

Follow the description in the document "Modbus-Protokol.pdf" in order to use the two Excel files with a high level of process reliability.

↻ Firmware version of device is identical to the specifications of the Sunspec® Modbus®.
↻ **NOTE: The device supports Modbus/TCP and the SUNSPEC models in the Excel files –** [See section 1.2 Page 4].
↻ **NOTE: For security reasons, write access must be explicitly activated.**

1. Enable the entry `Network – Modbus TCP – Operation mode` / `Network services – Modbus TCP – Operation mode` in the menu on the device or on the web interface.
2. If necessary, allow `write access`.
3. Set up the `Port` for access. [Default: `502`]

⇨ Access via Modbus enabled.

EN

10 Specifications

10.1 Reactive power control

Reactive power can be used in electrical energy supply networks to bolster the level of voltage. As such, feed-in inverters can contribute to statistical voltage stability. Reactive power brings about a voltage drop at the inductive and capacitive components of the equipment which can either bolster or reduce the level of voltage. If the generating plant draws inductive reactive power while active power is being fed in, part of the voltage swing caused by the active power feed can be compensated for by the supply of reactive power.

This reactive power mode and the respective control process are specified by the grid operator. If no control process has been specified, then the system should be operated using a reactive power specification of 0%.

10.1.1 Operating power range depending on grid voltage

The device can be operated within the respective fixed voltage range provided. The maximum apparent power is stated in the following table. In the event of undervoltage determined by the maximum continuous current subject to the grid voltage.

The following figures show the reactive power operating range subject to active power and the apparent power operating range depending on the grid voltage for various devices.

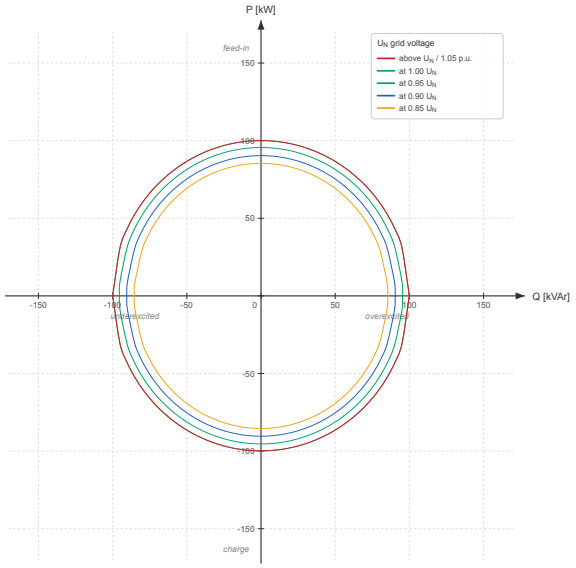

Fig. 54: P-Q Operating Range for bp gridsave backup 100 / gridsave HV 100

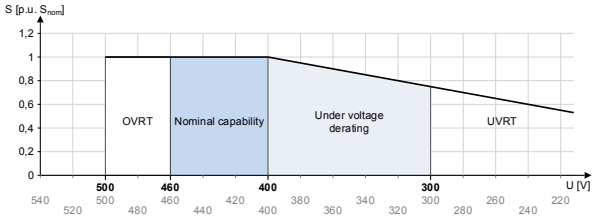

Fig. 55: Grid Voltage as a Function of Apparent Power for bp gridsave backup 100 / gridsave HV 100

EN

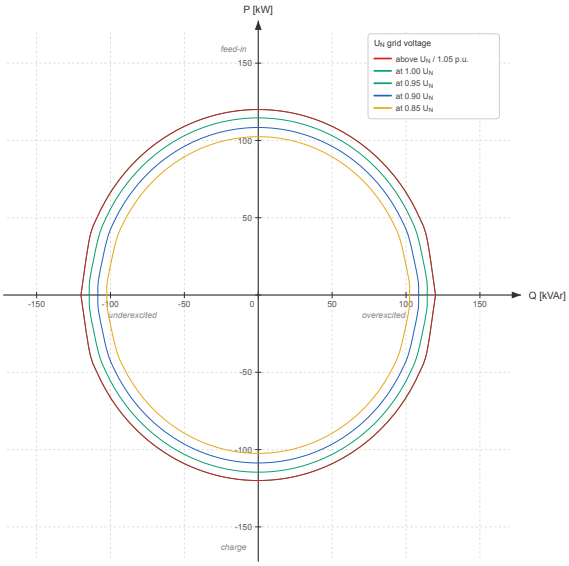

Fig. 56: P-Q Operating Range for bp gridsave backup 120 / gridsave HV 120

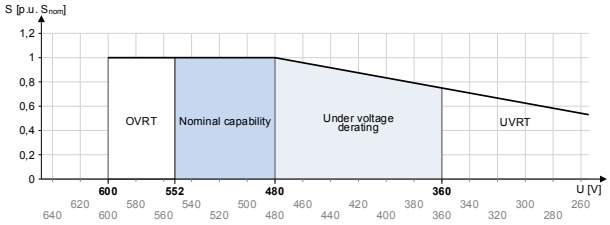

Fig. 57: Grid Voltage as a Function of Apparent Power for bp gridsave backup 120 / gridsave HV 120

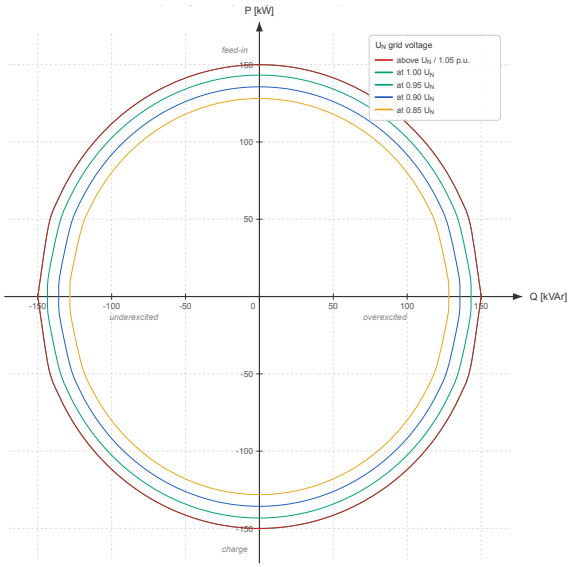

Fig. 58: P-Q Operating Range for bp gridsave backup 150 / gridsave HV 150

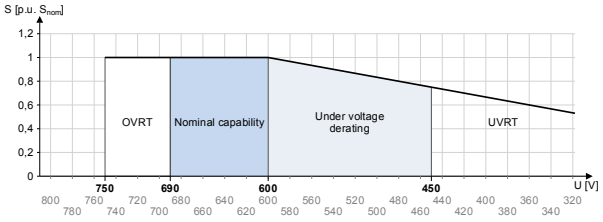

Fig. 59: Grid Voltage as a Function of Apparent Power for bp gridsave backup 150 / gridsave HV 150

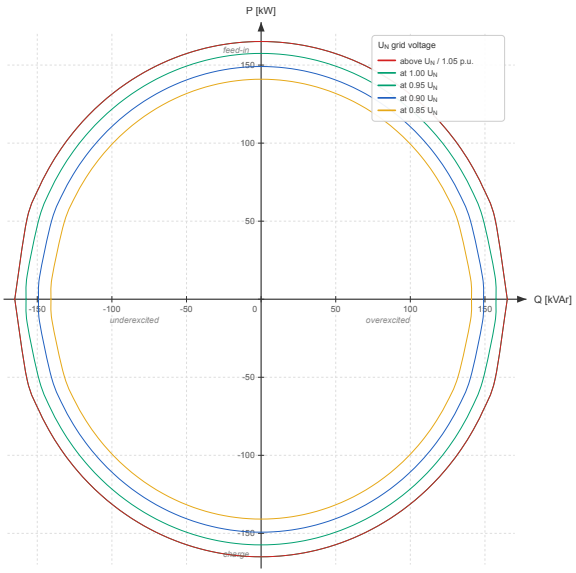

Fig. 60: P-Q Operating Range for bp gridsave backup 165 / gridsave HV 165

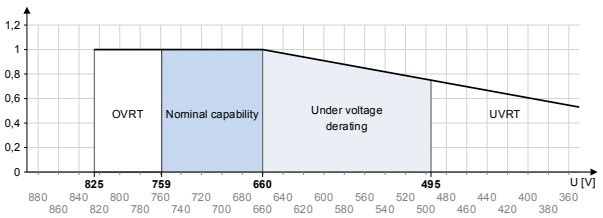

Fig. 61: Grid Voltage as a Function of Apparent Power for bp gridsave backup 165 / gridsave HV 165

EN

10.1.2 Dynamics and accuracy

In all control methods the specified target value at the inverter's connection terminals is adjusted using a stationary deviation of the reactive power of maximum 2% S_N. This maximum deviation always relates to the specified value as reactive power.

If the power factor cos ϕ is specified in the control method, then the deviation relates to the reactive power value brought about by the current power level.

The transient response of the control methods is determined by a PT-1 filter. In this case, the settling time corresponds to 3 Tau, or in other words, achieving approx. 99% of the final value for a PT-1 filter. Subject to the control method selected, there are also other parameters that determine dynamic behaviour.

10.1.3 Reactive power functions

The following functions for controlling the reactive power are implemented in the devices listed above:

- cos ϕ constant
- Q constant
- cos ϕ (P)
- Q(U) 10 nodes

NOTE: Reactive power is prioritised in the basic setting in all methods, but this can also be deactivated accordingly. The priority can be selected when using the Q const. and the Q(U) mode. The maximum possible active power that can be fed in is reduced in line with the P-Q operating range when the maximum grid power is reached.

Model	Parameter	Scaling factor	R/RW	Area	Description
126.	ModEna	ModEna	RW	⚙ 0 / 1	The reactive power method selected in the device can only be activated/deactivated indirectly via Sunspec.
123.	VArMaxPct Q constant	VArPCt_SF	RW	⚙ 0-100 [$\%_{Smax}$]	Setpoint of the reactive power can be adjusted depending on the set maximum apparent power.
123.	VArPct_RvrtTms Timeout		RW	⚙ 0 – 1000 [s]	Specifies the time after which the inverter, if it does not receive a new reactive power specification, reverts to the previously applicable reactive power procedure. If the Timeout is set to 0 seconds, the transmitted reactive power specification is permanently retained, even in the event of a communication timeout. Note: when the device is restarted, the timeout is reset to the default value.

cos φ(P)

In the cos ϕ (P) operating mode, the setpoint value of cos ϕ and the setpoint for the reactive power derived from it are continuously calculated depending on the actual power level. This function ensures that grid support is provided by the reactive power when a significant voltage boost is anticipated due to a high feed level. In this case, a characteristic curve is specified which can be used to configure up to 10 nodes, value pairs for active power and cos ϕ. The active power is entered as a % in relation to the set maximum apparent power Slim. Other parameters allow you to limit functionality and to limit activation to certain voltage ranges.

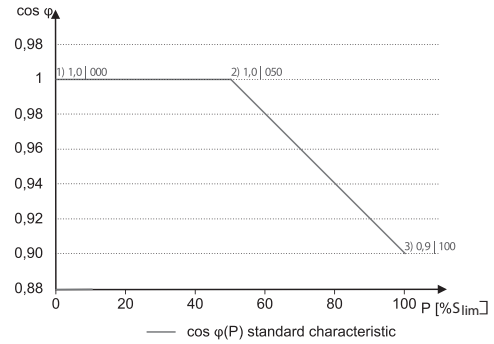

Fig. 62: cos ϕ (P) standard characteristic curve with 3 nodes

Q(U) 10 nodes

When it comes to Q(U) with 10 nodes, the reactive power target value is calculated continuously as a function of the grid voltage. This function ensures that grid support is provided by the reactive power as soon as the voltage actually deviates from the target voltage. In this case, a characteristic curve is specified which can be used to configure up to 10 nodes, value pairs for voltage and reactive power. Other parameters allow you to limit functionality and to limit activation to certain voltage ranges as well as parametrise the transient response.

The positive phase sequence voltage is used to calculate the reactive power target value for three-phase devices.

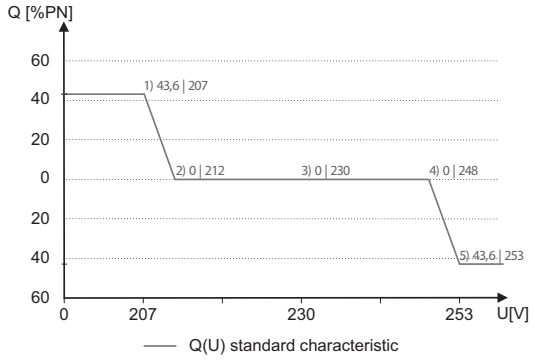

Fig. 63: Q(U) standard characteristic curve with 5 nodes

Q(P) 10 nodes

When it comes to mode Q(P), the nominal value of the reactive power is continuously calculated depending on the active power. In this mode, a characteristic curve is specified which can be used to configure up to 10 nodes, consisting of value pairs for power and reactive power. The function enables the transient response to be parametrised.

The zero sequence power is used to calculate the reactive power target for three-phase units.

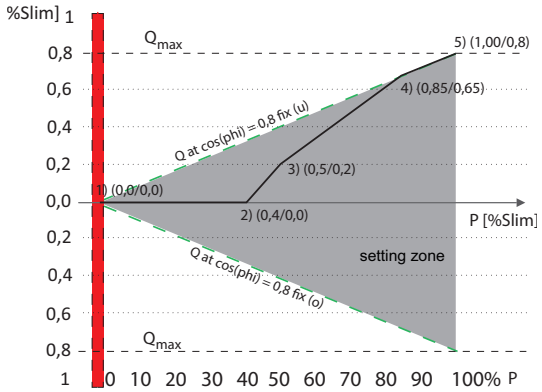

Fig. 64: Q(P) standard characteristic curve with 5 nodes

EN

10.1.4 Parameters for reactive power control

Country-spec. Settings	Menu level	Display/ Setting	Action in this menu/meaning
		Mode ☑☰ Specification cos-phi | Specification Q | Cos-phi(P/Plim) | Q(U) | Q(P)	Select the active method for reactive power control and define the parameters in the respective method.
		Cos-phi constant	
		Cos-phi constant ⚙ 0,3 – 1 / ◦ 1 / ◓ 0,001	Specified power factor.
		☑☰ Overexcited | underexcited	Reactive power mode: Under-excited relates to inductive load, over-excited relates to capacitive load.
		Power gradient increasing & power gradient decreasing ⚙ 1 – 65534 [% P_{lim}/min] / ◦ 65534 [% P_{lim}/min] / ◓ 1	Maximum change in the reactive power %P_{lim}/min in the event of a change to overexcited mode. **NOTE: The gradient is overlaid with the settling time.**
		Settling time ⚙ 1000 – 120000 [ms] / ◦ 1000 [ms] / ◓ 10	Determines the dynamic behaviour in the event of a change in the cos ϕ set value. With a reactive power change, the cos ϕ is changed according to a PT-1 characteristic curve with a settling time of 3 Tau.
		Q constant	
		Q constant ⚙ 0 – 100 [% Slim] / ◦ 0 [% Slim] / ◓ 0.1	Set as a percentage of the maximum reactive power.
		☑☰Underexcited | overexcited	Reactive power mode: Under-excited relates to inductive load, over-excited relates to capacitive load.
		Output gradient increase & Output gradient decrease ☑☰ increasing | decreasing ⚙ 1 – 65534 [% P_{lim}/min] / ◦ 65534 [% P_{lim}/min] / ◓ 1	In addition to configuring the dynamic behaviour using the setting time corresponding to a first-order filter, the reactive power setting can be determined by a maximum gradient – this means the maximum change in the reactive power per time period. Maximum change in the reactive power %P_{lim}/min in the event of a change to overexcited mode **NOTE: The gradient is overlaid with the settling time.**
		Settling time ⚙ 1000 – 120000 [ms] / ◦ 1000 [ms] / ◓ 10	Determines the dynamic behaviour in the event of a change in the Q target value. With a change of the reactive power or the lock-in and lock out voltage, the Q is changed according to a PT-1 characteristic curve with a settling time of 3 Tau.
		Cos-phi(P)	
		Lock-in voltage 10 – 126,6 [% Unom] / ◦ 80 [% Unom] / ◓ 1 [0.1]	Set the voltage above which control is activated.
		Lock-out voltage ⚙ 10 – 126,6 [% Unom] / ◦ 80 [%Unom] / ◓ 0.1	Set the voltage below which control is deactivated.

EN

Country-spec. Settings	Menu level	Display/ Setting	Action in this menu/meaning
		Power gradient increasing & power gradient decreasing ⚙ 1 – 65534 [% P_{lim}/min] / ◦ 65534 [% P_{lim}/min] / ⏠ 1	Maximum change in the reactive power %P_{lim}/min in the event of a change to overexcited mode. **NOTE: The gradient is overlaid with the settling time.**
		Settling time ⚙ 1000 – 120000 [ms] / ◦ 5000 [ms] ⏠ 10	Determines the dynamic behaviour in the event of a change in the cos ϕ set value. With a change of the active power or the lock-in and lock out voltage, the cos ϕ is changed according to a PT-1 characteristic curve with a settling time of 3 Tau.
		Number of nodes ⚙ 2 – 10	Specify the number of nodes for the cos ϕ/(p/pn) characteristic curve.
		1st node … 10th node ⚙ 0V - Max. voltage in continuous operation	Power of the node as a percentage of the maximum power. For the 1st node, the power must be 0%; for the last node, the power must be 100%. The power values of the nodes must increase continuously. Note: Storage inverters only for feed-in operation
		⚙1 – 0,3 / ◦ 1 / ⏠ 0.001	Reactive power of the node as a percentage of the maximum power.
		⚙ Overexcited | underexcited	Reactive power mode: Under-excited relates to inductive load, over-excited relates to capacitive load.
		Q(P) 10 nodes	
		Power gradient increasing & power gradient decreasing ⚙ 1 – 65,534 [% S_{lim}/min] / ◦ 65,534 [% S_{lim}/min] / ⏠ 1	The rate of change of the output when the output power is increased is limited by the configured value. The rate of change of the output when the output power is decreased is limited to the configured value. **NOTE: The gradient is overlaid with the settling time.**
		Settling time ⚙ 200 – 60000 [ms] / ◦ 6000 [ms] ⏠ 1	Sets the dynamic behaviour in the event of a change in the Q target value. With a change in the active power, the Q target value is changed according to a PT-1 characteristic curve with a settling time of 3 Tau.
		Number of nodes ⚙ 2 – 10	Specify the number of nodes for the Q(P) characteristic curve.
		1st node … 10th node ⚙ 0V - Max. voltage in continuous operation	Power of the node as a percentage of the maximum power. For the 1st node, the power must be 0%; for the last node, the power must be 100%. The power values of the nodes must increase continuously. Note: Storage inverters only for feed-in operation
		⚙1 – 0,3 / ◦ 1 / ⏠ 0.001	Reactive power of the node as a percentage of the maximum power.
		⚙ Overexcited | underexcited	Reactive power mode: Under-excited relates to inductive load, over-excited relates to capacitive load.
		Q(U) 10 nodes	
		Lock-in power ⚙ 0 – 100 [% S_{lim}] / ◦ 20 [% S_{lim}] / ⏠ 1	Power threshold, function is activated if limit value is exceeded.
		Lock-out power ⚙ 0 – 100 [% S_n] / ◦ 5 [% S_n] / ⏠ 1	Power threshold, function is activated if limit value is undershot.

EN

Country-spec. Settings	Menu level	Display/ Setting	Action in this menu/meaning
		Lock-In time ⚙ 0 – 60000 [ms] / ◦ 30000 [ms] / ◓ 1000 [ms]	Length of time that the active power must remain below the lock-in power level before control is deactivated.
		Lock-Out time ⚙ 0 – 60000 [ms] / ◦ 30000 [ms] / ◓ 1000 [ms]	Length of time that the active power must remain below the lock-out power level before control is deactivated.
		Downtime ⚙ 0-10000 [ms] / ◦ 0 [ms] / ◓ 1	If the voltage switches from a characteristic curve section with Q=0 to a characteristic curve section with Q≠0 under active control, then the reactive power setting process is delayed by the set dead time. Once the dead time has expired, the control circuit is no longer subject to a delay and the set setting time determines the transient behaviour.
		Output gradient increase & Output gradient decrease ☑ increasing | decreasing ⚙ 1 – 65534 [% P_{lim}/min] / ◦ 65534 [% P_{lim}/min] / ◓ 1	In addition to configuring the dynamic behaviour using the setting time corresponding to a first-order filter, the reactive power setting can be determined by a maximum gradient – this means the maximum change in the reactive power per time period.
			Maximum change in the reactive power %P_{lim}/min in the event of a change to overexcited mode **NOTE: The gradient is overlaid with the settling time.**
		Settling time ⚙ 1000 – 120000 [ms] / ◦ 2000 [ms] ◓ 10	Settling time in the event of an abrupt change in the reactive power target value (e.g. caused by a voltage jump). The transient behaviour corresponds to a first-order filter (PT-1) with setting time = 3 Tau. **NOTE: The settling time is overlaid with the increasing and decreasing gradient.**
		Min. cos-phi Q1 - Min. cos-phi Q4 ⚙ 0 – 1 / ◦ 0 / ◓ 0,001	In the event of a significant voltage deviation, the maximum reactive power adjustment range can be limited by a minimum cos ϕ in order to prevent an excessive reactive power supply and, as a result, a significant reduction in the maximum active power that can be fed in.
		Q1	Minimum cos ϕ in overexcited operating mode (in-feed).
		Q4	Minimum cos ϕ in underexcited operating mode (in-feed).
		Q2	Minimum cos ϕ in overexcited operating mode (charge).
		Q3	Minimum cos ϕ in underexcited operating mode (charge).
		Voltage dead band ⚙ 0 – 5 [% Uref] ◦ 0.0 ◓ 0.1	The control is activated above this voltage.
		Q(U) Offset (temporary) U offset ⚙ -100 -100 [% Slim] / ◦ 0.0 [%Slim] / ◓ 0.1 Q offset ⚙ -100 -100 [% Slim] / ◦ 0.0 [%Slim] / ◓ 0.1	Power threshold, function is activated if limit value is exceeded.
	1 2 3 4	Q minimum ⚙ 0 – 100 [% Slim] / ◦ 0 [% Slim] / ◓ 0.1	☞ Set the reactive power Q to a minimum value.
		⚙ Underexcited | overexcited	☞ Select the type of phase shift. **NOTE: Underexcited relates to inductive load, overexcited relates to capacitive load.**

EN

Country-spec. Settings	Menu level	Display/ Setting	Action in this menu/meaning
		Q maximum 0 – 100 [% Slim] / 0 [% Slim] / 0.1	☞ Set the reactive power Q to a maximum value.
		Underexcited | overexcited	☞ Select the type of phase shift. **NOTE: Underexcited relates to inductive load, overexcited relates to capacitive load.**
US, UD		Autonomous adjustment Vref	The autonomous adjustment of the reference voltage enables a dynamic reactive power function. As a result, the reference voltage of the Q(U) characteristic curve is dynamically adjusted to the grid voltage via a PT1 filter.
US, UD		Time constant Vref adjustment 300 – 5000 [s] 300 s	The time constant defines the control speed at which the reference voltage of the Q(U) characteristic curve is equalised to the grid voltage.
		Priority mode Q-priority | P-priority	P-priority can be selected as an alternative to the standard setting Q-priority. When it comes to P-priority, the reactive power adjustment range is limited subject to the limited apparent power of the inverter and the active power that is currently available and fed in.
		Active curve 1 – 4 / curve 1 TMP / curve 2 / curve 3 / curve 4	Up to four characteristic curves can be configured independently and one of them can be activated for regulation each time.
		Number of nodes 2 – 10	Specify the number of nodes for the Q(U) characteristic curve.
		1st node … 10th node **Power** | Voltage | Excitation 0 – 100 [% S_{lim}] / 43.6 [% S_{lim}] / 0.1	Power of the node as a percentage of the maximum power. For the 1st node, the power must be 0%; for the last node, the power must be 100%. The power values of the nodes must increase continuously.
		Power | **Voltage** | Excitation 0 – 125 [% S_{lim}] / 43.6 [% U_{nom}] / 0.1	Voltage of the node in volts The voltage values of the nodes must increase continuously. At voltages below the 1st node and voltages above the last node, the reactive power value of the 1st or last node is used each time.
		Power | Voltage |**Excitation** Overexcited | underexcited	Reactive power mode: Under-excited relates to inductive load, over-excited relates to capacitive load.

10.2 Active power regulation

Dynamics / accuracy

In all of the control methods described below the specified target value at the inverter's connection terminals is adjusted using a stationary deviation of the reactive power of maximum 2% S_N.

The transient response of the control methods is determined by a PT-1 filter. In this case, the settling time corresponds to 3 Tau, or in other words, achieving approx. 99% of the final value for a PT-1 filter. Subject to the control method selected, there are also other parameters that determine dynamic behaviour.

Methods for active power regulation

Methods for regulating the active power of feed-in inverters may be necessary for local management of load flows, for voltage stability in the distribution network and for ensuring the stability of the interconnected grid.

The device makes use of the following functions in order to regulate the active power. These are described in the following section:

– P target value (MPPT(communication))

EN

- P limit (communication)
- P(U) (characteristic curve) [See section 10.2.1 Page 84]
- P(f) (characteristic curve) [See section 10.2.2 Page 85]

10.2.1 Voltage-dependent power reduction P(U)

If it is not possible to compensate adequately for increase in voltage in the upstream distribution network by intake on reactive power, it may be necessary to curtail the active power. In this case, P(U) control is available for making optimum use of the capacity of the upstream grid.

P(U) control reduces the active power that is fed in as a function of the grid voltage using a prescribed characteristic curve as a basis. P(U) control is implemented as an absolute power limit. The actual power of the inverter may vary freely below this limit due to a possible fluctuation in the available power or the target value, but at no time increases above the absolute power limit.

[See figure 65 [Page 84] and [See figure 66 [Page 84] are two examples of configuration. In figure 1 without hysteresis, the function is activated as soon as the voltage exceeds the configured voltage of data point 1 (dp1). The power limit follows the characteristic curve, a straight line between dp1 and dp2. The function is deactivated as soon as the voltage falls below dp1. In [See figure 66 [Page 84], the function is activated as soon as the voltage exceeds the configured voltage of dp2. In this case, dp1 does not result in activation of the function because the power limit remains at 100%. The power limit follows the characteristic curve, a straight line between dp2 and dp3. However, because hysteresis is activated, the power limit is not increased when the voltage drops. The function is deactivated as soon as the voltage falls below dp1.

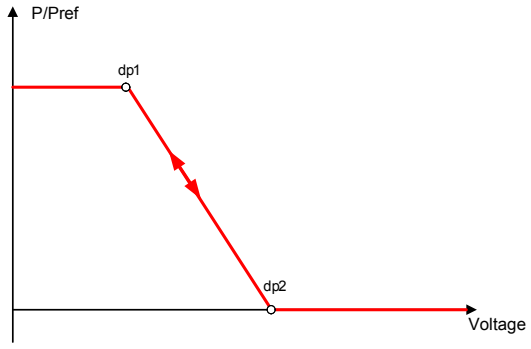

Fig. 65: Example characteristic curve without hysteresis

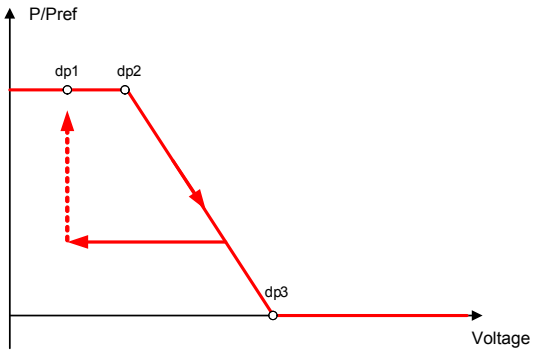

Fig. 66: Example characteristic curve with hysteresis and a deactivation threshold below the activation threshold

In the case of storage inverters, the function is only available in discharge/grid feed-in mode, not in battery charging mode.

10.2.1.1 Parameters for P(U)

Country-spec. Settings	Menu level	Display/ Setting	Action in this menu/meaning
	1 2 3 4	Operation mode ☑☰ Off | On	☞ Activate the control process. **Off**: Deactivates dynamic grid support using dynamic reactive current. Dynamic grid support remains active on account of immunity to interference.
		Reference power ☑☰ Actual power | Nominal power	Specifies the power reference for the characteristic curve. 100 % here corresponds to the nominal power or the actual power at the time the function was activated, the time when the voltage passes the configured node.
	1 2 3 4	Evaluated voltage ☑☰ Maximum phase voltage | Positive sequence voltage	☞ Select the voltage to be rated. Specifies which voltage is evaluated in a three-phase system.

EN

Country-spec. Settings	Menu level	Display/ Setting	Action in this menu/meaning
		Hysteresis mode Off | On	**Off:** In non-hysteresis mode, the active power is increased immediately with dropping voltage. **On:** In hysteresis mode, the power is not increased with dropping voltage. .
		Deactivation gradient 0 – 65534 [% / min] / 100 [% / min] / 1	If the available power is above the actual output at the time of deactivation, the power increase back to the maximum power is limited. The limitation is implemented by an absolute power limitation that increases with a continuous gradient up to the maximum power. The actual power of the inverter may vary freely below this limit due to a possible fluctuation in the available power or the target value, but at no time increases above the absolute power limit.
		Deactivation time 0 – 6000000 [ms] / 100 [ms] 1	Only evaluated with activated hysteresis mode: Monitoring time during which the voltage must remain below the lowest configured node before the function is deactivated.
		Output gradient limitation increase & Output gradient limitation decrease 1 – 65534 [% / min] / 65534 [% / min] / 1	Specifies the dynamic response on changing the active power for power increase. With a voltage change, the active power is changed with the specified gradient. The gradient is overlaid with the settling time. Specifies the dynamic response on changing the active power for power decrease. With a voltage change, the active power is changed with the specified gradient. The gradient is overlaid with the settling time.
		Settling time 1000 – 120000 [ms] / 2000 [ms] / 10 [ms]	Determines the dynamic behaviour in the event of a change in the active power set value. With a voltage change, the active power is changed according to a PT-1 characteristic curve with a settling time of 3 Tau. **Note:** The settling time is overlaid with the increasing and decreasing gradient.
		Active curve 1 - 5	Select active curve. **NOTE: Up to 5 characteristic curves can be configured independently and one of them can be activated for regulation each time.**
		Number of nodes 2 - 5 Power 0.0 – 100.0 [% P_{ref}] / 100.0 [% P_{ref}] / 0.1 Voltage 80.0 – 126.0 [% U_{nom}] / 112.0 [% U_{nom}] / 0.1	up to 5 support points definable The power value of the first and last value pair is also used as the maximum or minimum active power value that is valid across the limits of the characteristic curve.

10.2.2 P(f)

Adjusting the active power P(f) in the event of overfrequency and underfrequency

Feed-in inverters must assist with frequency stability in the grid. If the grid frequency leaves the normal tolerance range (e.g. ±200 mHz), then the grid will be in a critical state. In the event of overfrequency, there is a generation surplus, in the event of underfrequency, there is a generation deficit.

EN

Power storage systems must adapt their feed-in power relative to the frequency deviation. In the event of overfrequency, the power adjustment is determined by a maximum feed-in limit, in the event of underfrequency, by a maximum charging limit. The actual power of the inverter may vary freely below this limit due to a possible fluctuation in the available power or the target value, but at no time increases above the absolute power limit.

$$P_{max-limit} = P_M + \Delta P$$

Fig. 67: Equation 1

$$\Delta P = g \cdot P_{ref} \cdot (f_1 - f)$$

Fig. 68: Equation 2

Equation 1 [See figure 67 [▶ Page 86] defines the maximum limit with ΔP relevant to 2 [See figure 68 [▶ Page 86], P_M the current power at the time of activation and P_{ref} the configured reference power.

$$\Delta P = \frac{1}{s} \times \frac{(f_1 - f)}{fn} \times Pref$$

Fig. 69: Equation 3

$$g = \frac{1}{s \cdot f_n}$$

Fig. 70: Equation 4

In some standards, the power adjustment is specified by a drop (s) instead of a gradient (g), as shown in equation 3 [See figure 69 [▶ Page 86]. The drop s can be transformed into a gradient g in accordance with equation 4 [See figure 70 [▶ Page 86].

The frequency f remains above the activation threshold f_1 during an overfrequency incident. Consequently, the expression (f_1 – f) is negative and ΔP corresponds to a reduction in the feed-in power or an increase in the charging capacity. The frequency f remains below the activation threshold f_1 during an underfrequency incident. Consequently, the expression (f_1 – f) is positive and ΔP corresponds to an increase in the feed-in power or an reduction in the charging capacity.

Depending on the operating point of the inverter at the time of activation, the configured power reference and the configured gradient, the inverter may switch from charging to feed-in mode in the event of underfrequency or from feed-in to charging mode in the event of overfrequency ().

The measurement accuracy of the frequency is greater than 10 mHz.

The specific mode of operation of the function is specified by the grid operator or the pertinent standards or the grid connection guidelines. The configurability of the function makes it possible to satisfy a wide variety of standards and guidelines. Certain configuration options are not available in some country settings because the pertinent standards or grid connection guidelines prohibit adjustments.

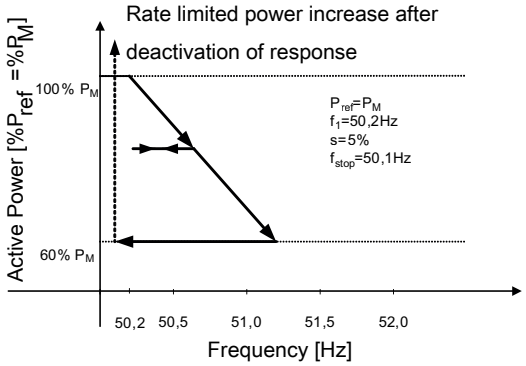

Fig. 71: Example behaviour with hysteresis (mode 1)

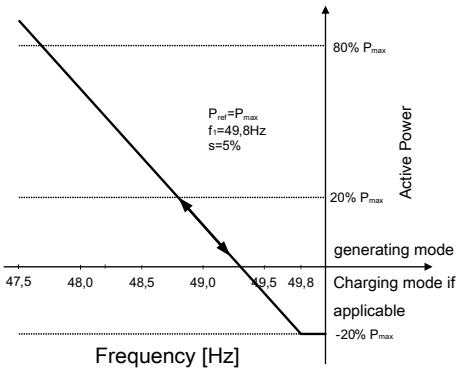

Fig. 72: Example behaviour without hysteresis (mode 2) At the time of activation, the inverter is in charging mode at 20% charging capacity.

EN

10.2.2.1 Parameters for P(f)

Country-spec. Settings	Menu level	Display/ Setting	Action in this menu/meaning
		P(f) operation mode ☑☰ Off | Mode 1 | Mode 2 | Mode 3	Activate or deactivate function. **Mode 1:** With hysteresis activated – Limit **Mode 2:** Without hysteresis activated – Limit **NOTE: In mode 1 & 2, the power below or above the characteristic curve (depending on over- or underfrequency) is adjusted via a Pset command. Plim can also limit the power with an active P(f) characteristic curve.** **Mode 3:** Without hysteresis activated – Set **NOTE: In mode 3, the pre-fault power is stored and the power moves along this characteristic curve.**
		Power reference mode with overfrequency ☑☰ Actual power | Nominal power Power reference mode with underfrequency ☑☰ Actual power | Nominal power	**Power reference with overfrequency:** Power reference for power adjustment as in equation 2 and equation 3 for overfrequency incidents. **Power reference with underfrequency:** Power reference for power adjustment as in equation 2 and equation 3 for overfrequency incidents.
	1 2 3 4	Dynamic gradient mode ☑☰ On | Off	☞ Activate dynamic gradient. **NOTE: Gradient "Feed-in/charging with over/under frequency" is not displayed.**
		Gradient at underfrequency – feed-in ⚙ 0 – 200 (%/Hz) / ◦ 40 (%/Hz) / ◠ 1 Gradient at overfrequency – feed-in ⚙ 0 – 200 (%/Hz) / ◦ 40 (%/Hz) / ◠ 1	**Gradient at underfrequency (feed-in):** Determines the active power adjustment in accordance with equation 2 and equation 3, subject to the frequency. Gradient for underfrequency incidents if the incident begins in feed-in mode. **Gradient at overfrequency (feed-in):** Determines the active power adjustment in accordance with equation 2 and equation 3, subject to the frequency. Gradient for overfrequency incidents if the incident begins in feed-in mode.
		Gradient at overfrequency – charging ⚙ 0 – 200 (%/ P_{ref} / Hz) ; ◦ 40 (% P_{ref} /Hz) / ◠ 1 [Hz] Gradient at underfrequency – charging ⚙ 0 – 200 (%/Hz) ; ◦ 40 (% P_{ref} / Hz) / ◠ 1 [Hz]	**Gradient at overfrequency (charging):** Determines the active power adjustment in accordance with equation 2 and equation 3, subject to the frequency. Gradient for overfrequency incidents if the incident begins in charging mode. **Gradient at underfrequency (charging):** Determines the active power adjustment in accordance with equation 2 and equation 3, subject to the frequency. Gradient for underfrequency incidents if the incident begins in charging mode.
		Gradient ⚙ 0 – 200 (%/Hz) ◦ 66 (%/Hz)	Determines the active power adjustment in accordance with [See figure 68 [▶ Page 86] and [See figure 69 [▶ Page 86], subject to the frequency.

EN

Country-spec. Settings	Menu level	Display/ Setting	Action in this menu/meaning
		Maximum dynamic gradient frequency ⚙ 50.22 – 70.5 [Hz] 🖴 0.01 [Hz] Minimum dynamic gradient frequency ⚙ 45 – 50 [Hz] 🖴 0.01 [Hz]	**Dynamic gradient maximum frequency:** If dynamic gradient mode is activated, the gradient is calculated in order to guarantee a linear power adjustment and reach the maximum charging power if the frequency rises to the maximum configured frequency. **Dynamic gradient minimum frequency:** If dynamic gradient mode is activated, the gradient is calculated in order to guarantee a linear power adjustment and reach the maximum feed-in power if the frequency drops to the minimum configured frequency.
		Activation threshold at underfrequency ⚙ 40 – 50 [Hz] / ◦ 40 [Hz] / 🖴 0.01 Activation threshold at overfrequency ⚙ 50 – 60 [Hz] / ◦ 50.02 [Hz] / 🖴 0.01	**Activation threshold (f1) underfrequency:** Determines the frequency threshold for activating the function in case of underfrequency incidents. The active power adjustment is activated if the frequency falls below the configured value and mode 1 or 2 is activated. In mode 2, the function is deactivated if the frequency rises above the configured value. **Activation threshold (f1) overfrequency:** Determines the frequency threshold for activating the function in case of overfrequency incidents. The active power adjustment is activated if the frequency rises above the configured value and mode 1 or 2 is activated. In mode 2, the function is deactivated if the frequency falls below the configured value.
		Threshold Area lower limit [Hz] ⚙ 40 – 50 [Hz] / ◦ 47.5 [Hz] / 🖴 0.01	Only evaluated in mode 1. The function is deactivated if the frequency returns to the deactivation range and remains in this range for the duration of the deactivation time.
		Threshold Area upper limit [Hz] ⚙ 50 – 60 [Hz] / ◦ 50.5 [%/Hz] / 🖴 0.01	
		P(f) deactivation time ⚙ 0 – 6000000 [ms] / ◦ 0 [ms] / 🖴 1	Only evaluated in mode 1. The function is deactivated if the frequency returns to the range between the minimum and maximum deactivation threshold and remains in this range for the duration of the deactivation time.
		Deact. lim. time after fault ⚙ 0 – 1000 [s] / ◦ 0 [ms] / 🖴 1000 [s]	Only evaluated in mode 2&3. After the end of the fault, the change in active power is limited to the set gradient for the specified time.
		Deact. grad. incr. after fault & Deact. grad. decr. after fault ⚙ 0 – 65534 [% / min] / ◦ 10 [% / min] / 🖴 1	Specifies the dynamic response on changing the active power for power increase and power decrease. Any change in active power is limited to the set value for the set duration.

EN

Country-spec. Settings	Menu level	Display/ Setting	Action in this menu/meaning
		P(f) intentional delay ⚙ 0 – 5000 [ms] / ◦ 0 [ms] / 🖳 1	The activation of the function based on the activation threshold is delayed by the configured time. Note 1: This function is regarded as critical for the stability of the transmission grid and is therefore prohibited by several national grid connection regulations. Note 2: This function is stipulated as a requirement by some domestic grid connection directives in order to prevent any negative impact on island detection. However, P(f) has no negative impact on KACO's enhanced island detection.
		Output gradient limitation increase & Output gradient limitation decrease ⚙ 0 – 65534 [% / min] / ◦ 65534 [% / min] / 🖳 1	Specifies the dynamic response on changing the active power for power increase and decrease. With a voltage change, the active power is changed with the specified gradient. **Note:** The gradient is overlaid with the settling time.
		P(f) deactivation gradient ⚙ 0 – 65534 [%S_{max} / min] / ◦ 10 [% S_{max} / min] / 🖳 1	If the available power is above the actual output at the time of deactivation, the power increase back to the maximum power is limited. The limitation is implemented by an absolute power limitation that increases with a continuous gradient up to the maximum power. The actual power of the inverter may vary freely below this limit due to a possible fluctuation in the available power or the target value, but at no time increases above the absolute power limit.

10.2.3 Frequency-sensitive mode (FSM)

The primary goal of the FSM is immediately to stabilise the mains frequency at its nominal value (e.g. 50 Hz or 60 Hz) directly after a fault. This rapid response prevents large frequency dips or increases that could lead to cascade failures, widespread blackouts, or damage to the network infrastructure and connected devices.

While a generic P(f) (power-frequency) function is typically a basic requirement for most grid-connected generation units, FSM is a commercialised and often more responsive implementation of this frequency-dependent control. In contrast to the pure P(f) function, FSM enables participants to offer their frequency control capabilities on the market.

The implemented P(f) function has the same control characteristics, but a different priority. It must be possible for both functions to be activated simultaneously.

The FSM works as a completely automatic and local process. It is activated by a deviation of the grid frequency from its nominal value, with participating generation units (such as power plants or renewable energy sources with grid-forming capabilities) and controllable consumption units initiating the response.

Specifically, this means: If the grid frequency drops – a clear indicator that consumption is exceeding generation – these units automatically increase their power output or reduce their consumption. If, on the other hand, the frequency rises, which indicates excess generation, the units automatically reduce their power output or increase their consumption.

This reaction is not random, but is typically proportional to the frequency deviation – a property known as "droop control". This proportional mechanism prevents overcorrection and allows the frequency to stabilise at a new, slightly shifted value until slower secondary control mechanisms can take over. Activation typically takes place within a few seconds of the frequency deviation being detected.

After activation, the device must adjust the active power with a configurable gradient g [1/Hz] relative to P_{nom}:

$$P_{target} = P_{set} + \Delta P$$

$$\Delta P = g \times |P_{nom}| \times (f_{act} - f)$$

Fig. 73: Equation

- Where:
- P_{ref} is always P_{nom} for this function
- The gradient can be configured independently for overfrequency and underfrequency events.
- With battery inverters, the gradients must NOT be configured independently for charging and feed-in mode.

EN

– A power increase (absolute value) is only required if primary power is available and the inverter conditions (e.g. temperature, battery state of charge) permit an increase.
– Up to 2 frequency thresholds (for overfrequency and underfrequency) can be configured, each with an associated gradient.

Configurable dynamics

The dynamics of the function can be configured as follows:

☞ Input low-pass filter

The input value of the function (e.g. voltage, frequency, power) is filtered by a 1st order low-pass filter (optional: 2nd order filter).

☞ Output power gradient

The rate of change of a function output (e.g. Pmax, Qset) is limited to a value %/time. The % value refers to the nominal value of the relevant variable (e.g. Pnom for Pset or Snom for Qset). Two parameters can be configured: one for increase and one for reduction.

NOTE: The time functions are necessary to adapt the response behaviour to various dynamic requirements of different network operators.

☞ Dynamic dead band

The network operator can specify the dead band as a dynamic dead band around the measured frequency value, which corresponds to a fixed dead band with tracking filter.

Priority	Control command	Description
1 (highest)	Power limitation (power control)	Absolute power limitation by the grid operator. Takes priority over power increase by FSM. Used for generation limiting.
2	Extended power limitation	Extended absolute power limitation. Also takes priority over FSM.
3	Power setpoint	Active system setpoint. FSM is added to this setpoint. Used for active system control.
4 (lowest)	FSM	Frequency-supporting measure. Is added to the power setpoint.

Tab. 6: Hierarchy between power control and FSM

10.2.3.1 Parameters for FSM

Country-spec. Settings	Menu level	Display/ Setting	Action in this menu/meaning
	1 2 3 4	Gradient under frequency level 1 ⚙ 0 – 500 (% Pnom / Hz) ◦ 50 (% Pnom / Hz) Gradient under frequency level 2 ⚙ 0 – 500 (% Pnom / Hz) ◦ 50 (% Pnom / Hz)	Defines the slope of the active power-frequency characteristic in the underfrequency range. The gradient indicates the percentage of the nominal power by which the active power output is adjusted per Hertz of frequency deviation. Level 1 and level 2 enable the configuration of a two-stage characteristic curve with different slopes. If the underfrequency activation threshold is undershot, the inverter regulates the active power according to the configured gradient.
		Gradient over frequency level 1 ⚙ 0 – 500 (% Pnom / Hz) ◦ 50 (% Pnom / Hz) Gradient over frequency level 2 ⚙ 0 – 500 (% Pnom / Hz) ◦ 50 (% Pnom / Hz)	Defines the slope of the active power-frequency characteristic in the overfrequency range. The function is similar to the underfrequency gradient, but here the active power is reduced when the overfrequency activation threshold is exceeded. Two levels allow a step-by-step linear characteristic curve with a different drop rate in different frequency ranges.

EN

Country-spec. Settings	Menu level	Display/ Setting	Action in this menu/meaning
	1 2 3 4	Activation threshold under frequency level 1 48 – 50 Hz 49.995 Hz Activation threshold under frequency level 2 48 – 50 Hz 49.995 Hz	Frequency threshold for activating the active power adjustment for underfrequency events. The function is activated on a falling edge (frequency falls below the threshold value). The function is deactivated if there is a rising edge (frequency rises above the threshold value) and no configured stop frequency. Level 2 defines a second threshold value for the transition to the second characteristic curve level.
		Activation threshold over frequency level 1 50 – 52 Hz 50.005 Hz Activation threshold over frequency level 2 50 – 52 Hz 50.005 Hz	Frequency threshold for activating the active power adjustment for overfrequency events. The function is activated on a rising edge (frequency exceeds the threshold value). The function is deactivated on a falling edge (frequency falls below the threshold value). The combination of level 1 and level 2 defines the transition points of the two-stage characteristic curve.
	1 2 3 4	Activation delay time 0 – 5000 [ms] / 0 [ms] / 1	Time delay between exceeding the activation threshold and the start of active power adjustment. Prevents a reaction to short-term frequency transients. The timer starts with a rising edge for overfrequency events or with a falling edge for underfrequency events relative to the activation threshold.
	1 2 3 4	Output gradient limitation increase 0 – 65534 (%/min) 65534 (%/min) Output gradient limitation decrease 0 – 65534 (%/min) 65534 (%/min)	1. The rate of change of the output power is limited by the configured value when the output power is increased. 2. The rate of change of the output power when the output power is reduced is limited by the configured value.
	1 2 3 4	Settling time (3 Tau) 120 – 13200 [ms] / 120 [ms] / 10	Time constant for the transient behaviour in the event of sudden changes in the nominal power setpoint. The value corresponds to three times the filter time constant (3τ), after which approx. 95% of the new setpoint is reached. Determines the dynamics of the power control when FSM is activated.
	1 2 3 4	Frequency response insensitivity 0 – 50 [mHz] / 10 [mHz] / 1	Dead band around the last active frequency point on the characteristic curve. Frequency changes within this band (±) do not trigger a power adjustment. Prevents constant readjustment in the event of minor frequency fluctuations during stationary operation and thus reduces the mechanical and thermal load on the system.

10.3 Dynamic grid support

A generation plant's ability to remain immune to voltage drops and voltage spikes in the supply system is a key element in establishing a reliable energy supply. Immunity to interference ensures that brief disruptions do not result in a loss of generation capacity in a larger range of an interconnected grid. Grid support by a fast feeding of residual current also limits the spatial extent of the incident.

With its dynamic grid support by way of immunity, the device has this characteristic. The ability to remain on the grid is particularly relevant. The protective settings also determine the device's ability to remain on the grid or not. Protective settings take the upper hand over the capacity of immunity to interference.

10.3.1 Dynamic grid support by way of immunity to interference

Voltage drop above the limit curve (see figure below) can be overcome without the need for shutdown from the grid. The feed-in power remains constantly within the limits of the maximum continuous current of the inverter.

EN

If a reduction in power occurs, the power is brought back up to the pre-fault level within 100 ms of the voltage returning.

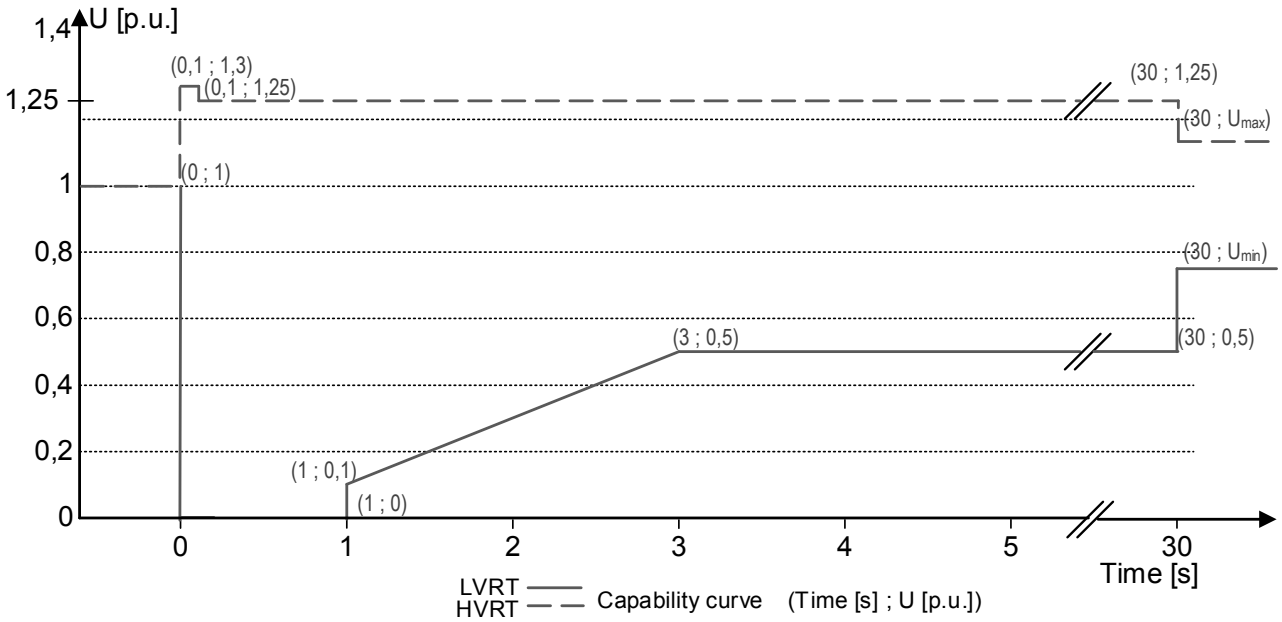

Fig. 74: Immunity to interference characteristic curve relative to the nominal voltage

10.3.2 Dynamic grid support using a fast feeding of residual current

When dynamic grid support using a fast feeding of residual current is activated, then residual current is fed in in addition to the immunity to interference properties against drops and spikes described above.

The inverter adapts its current feed as soon as a drop or spike incident occurs in order to bolster the grid voltage. The support takes place in the event of voltage drop in the form of overexcited reactive current (corresponds to a capacitive load), in the event of voltage spike in the form of overexcited reactive current (corresponds to an inductive load). In the reactive current priority mode, the effective current is reduced to the extent necessary to comply with the limits of the maximum continuous current of the inverter.

A dip or swell is detected if either the normal operating voltage range setting is exceeded by at least one phase-phase or phase-PE voltage, or if a voltage jump in the positive or negative sequence component greater than the dead band setting occurs. The magnitude of the voltage jump of the positive and negative sequence corresponds to the difference between the pre-fault voltage and the actual voltage based on the reference voltage. The pre-fault voltage is calculated as a 50-periods mean value.

$$\Delta u = \frac{U - U50per}{Uref}$$

Fig. 75: Formula no. 1

The reactive current is adapted using a response time of <20 ms and a setting time of <60 ms after the incident has occurred. Responses to changes in the voltage during the incident or to the voltage recovery at the end of the incident take place with the same dynamic.

The formula for calculating the dynamic reactive current that is fed for the positive or negative phase sequence voltage is:

$$I_b = \Delta u * k * I_{max}$$

Fig. 76: Formula no. 2, depending on the continuous current Imax of the inverter

For the positive and negative phase sequence voltage, *Δu* equates to the difference between the pre-fault voltage and the current voltage based on the max. reference voltage. The pre-fault voltage is calculated as a 1-min mean value.

$$\Delta u = \frac{U - U1min}{Uref}$$

Fig. 77: Formula no. 3

On account of the definition of a voltage jump in EN 50549-2 and in VDE-AR-N 4120 and VDE-AR-N 4110, it is typically the case that another voltage jump is detected when the incident is at an end, when the fault is rectified and when the voltage returns to a normal state. The result of this is that in an active operation mode a dynamic grid support using a fast

feeding of residual current remains active even after the incident has passed and that reactive current is fed in according to the formulae (2) and (3). Dynamic grid support using fast feeding of residual current is then deactivated after a configured minimum support time, usually 5 s.

$$I = (\Delta u_1 - tb) * k * I_{max}$$

Fig. 78: Formula no. 4

10.3.3 Parameters for dynamic grid support

Country-spec. Settings	Menu level	Display/ Setting	Action in this menu/meaning
		Dynamic grid support	**NOTE: The device supports dynamic grid stabilisation. More detailed information at:** [See section 10.3 Page 91]
		Operation mode – On | Off Setting | Manual |Predefined zero current	**Setting: Manual** All parameters can be configured independently. **Setting: Predefined zero current** Dynamic grid support active on account of immunity to interference and zero current feed-in. During a voltage incident, the current in the inverter is reduced to zero. All parameters are pre-configured, only the activation threshold for zero current has to be configured.
		Priority – Reactive current limitation | Active current priority	**Priority: Reactive current priority** Dynamic grid support active on account of immunity to interference and fast feeding of residual current. The inverter feeds additional reactive current according to the formulae (2) and (4). **Priority: Effective current priority** Dynamic grid support active on account of immunity to interference and fast feeding of active current with dynamic reactive current. The inverter feeds in as much active power as available. If, as a result of this, the maximum continuous current is not achieved, the inverter supplies additional reactive current according to the formulae (2) and (4) up to the limit of continuous current.
		Zero current undervoltage threshold Zero current threshold over voltage 0 – 80 [% Unom] / 10 [% Unom] / 0.1 108 – 129 [% Unom] / 125 [% Unom] / 0.1	If one or more phase/phase or phase/neutral conductor voltages move above the configured threshold, the inverter changes to zero current mode. The total current is regulated to virtually zero.
		Reference voltage 80 – 110 [% Unom] / 100 [% Unom] / 0.1 [Unom]	Nominal value of the phase/neutral conductor voltage used as a reference voltage for formula (1) and (3). Adjustable in the range from level 1 undervoltage protection to level 1 overvoltage protection.
		Constant k negative sequence dip Constant k negative sequence swell k 0 – 10 / 2 / 0.1	Amplification factor for the negative sequence used in the calculation of the reactive current using formulae (2) and (4). Can be configured independently for drops and spikes.

EN

Country-spec. Settings	Menu level	Display/ Setting	Action in this menu/meaning
		Constant k positive sequence dip & Constant k positive sequence swell ⚙ k 0 – 10 / ◦ 2 / ◓ 0.1	Amplification factor for the positive sequence used in the calculation of the reactive current according to Equations (2) and (4). Can be configured independently for voltage dips and voltage swells.
		Dead band ⚙ 2 – 120 [% Uref] / ◦ 10.0 [% Uref] / ◓ 0.1	Dynamic grid support through fast feeding of residual current activated in the case of voltage events with a voltage change greater than the dead band.
		Reference voltage 80 – 110.0 [% Unom] / ◦ 100 [% Unom] / ◓ 0.1 & Minimum operating voltage activation 45 – 125.0 [% Unom] / ◦ 80 [% Unom] / ◓ 0.1 & Maximum operating voltage activation 45 – 125.0 [% Unom] ◦ 80 [% Unom] / ◓ 0.1	Dynamic grid support via fast feeding of residual current is activated on voltage events with at least one phase/phase or phase/neutral conductor voltage outside the configured normal operating voltage range. Dynamic grid support via fast feeding of residual current is deactivated when the voltage returns to the reference operating voltage range.
		Dynamic reactive current only ☑☰Off | On	**Standard**: The reactive current according to the formulae (2) and (4) is fed as **additional** reactive current. The means that sum of the pre-fault and additional reactive current is fed in. **Only dynamic:** The reactive current according to the formulae (2) and (4) is fed in as absolute reactive current. This means that regardless of the reactive current before the voltage event, only the reactive current according to the formulae (2) and (4) is fed in during the voltage event.
		Dead band mode Mode 1 | Mode 2	**Mode 1**: When calculating the reactive current, the value of the dead band is not subtracted from the amount of voltage change. As such, formula (2) applies to overvoltage and undervoltage incidents. **Mode 2:** When calculating the reactive current, the value of the dead band is subtracted from the amount of voltage change. For overvoltage and undervoltage events, formula (4) therefore applies: $I = (\Delta u_1 - tb) * k * I_{max}$
		Reactive current limitation ⚙ 0 – 100 [% Imax] / ◦ 100 [% Imax] / ◓ 1	The reactive power component of the fast feeding of residual current is limited to permit a defined proportion of active power components.
		Minimum support time ⚙ 1000 – 15000 [ms] / ◦ 5000 [ms] ◓ 10	If due to a voltage jump in accordance with formula (1) and the configured dead band is activated, the dynamic grid support is deactivated via fast feeding of residual current after the minimum support time elapses.

EN

10.4 Other grid-supporting functions that are effective in the case of active power

10.4.1 Permanent power gradient limitation

The maximum active and apparent power to be installed for a generation plant is agreed between the grid operator and plant operator. The device capacity of a plant can be set to the exact agreed value using the S_{lim} and P_{lim} settings. To ensure that the load on the devices in the plant is uniform, we recommend distributing the performance reduction evenly across all devices.

Some grid connection rules insist that the agreed reactive power be supplied from every operating point of the plant without a reduction in the actual active power. Because KACO devices have the full P-Q operating range, a reduction in the active power is, however, required during operation at maximum active power because an apparent power reserve is not available. By adjusting P_{lim}, the maximum active power can be restricted in order to establish an apparent power reserve and ensure that the agreed reactive power can be delivered from any active power operating point. The graphic shows the appropriate P-Q operating range with a required example active power of 48% of the maximum apparent power of the plant or 43% of the maximum active power of the plant.

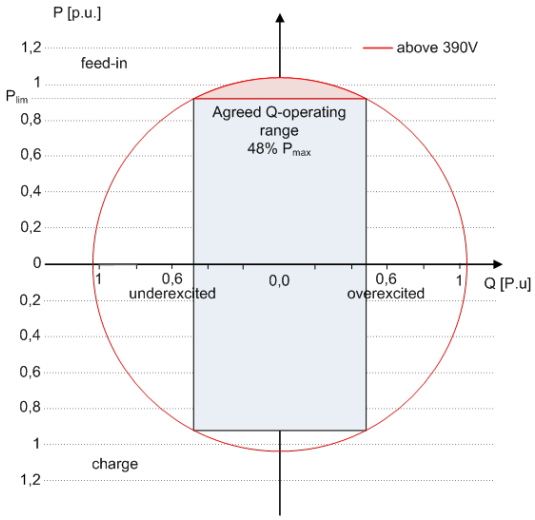

Fig. 79: P-Q operating range with limited active power (Qmax=Smax≠Pmax) Storage inverter

The power reduction parameters can be adjusted in SunSpec model DID123. During this process, you should also check whether internal and/or external power reduction is active.

Internal power limitation	Parameters for external power limitation	Parameters for power limitation
Status = active	Status = active	Parameters in SunSpec model 123:
Maximum apparent power S_{lim}= **92000 VA**		"WMaxLimPct" = 50% P_{lim} (**approx. 36800 W**) "WMaxLimPct_RvrtTms" = **60s**
Maximum active power P_{lim}= **80% (approx. 73600 W)**	AC fallback active power Pfb = **75%** P_{lim} **(approx. 55200 W)**	"WMaxLimPct_RmpTms" = **2s** "WMaxLim_Ena" = **1**
	PT1 settling time = 1s	

Tab. 7: Sample parameters for power limitation

If the ramp time "WMaxLimPct_RvrtTms" in the SunSpec model is specified as 0 s, then the internal output gradient is used. Otherwise, the set value will be used.

Irrespective of the communication protocol used, the settling time "WMaxLim_Ena" is used in order to transfer the new power value. Otherwise, the internally configured value will be used.

The additional ramp time "WMaxLimPct_RmpTms" specifies the jump time from a power value to the new power value.

The following formulae are used to calculate the gradient $S_{lim/min}$:

$$\text{GradientWattPerMin} = \frac{\left(\frac{WMaxLimPct}{100} \times Plim - Pactual\right)}{WMaxLimPct_{RmpTms}} \times 60 \times \frac{100}{Slim}$$

$$\text{GradientWattPerMin} = \frac{\left(\frac{50\%}{100} \times 36800\,W - 55200\,W\right)}{2\,s} \times 60 \times \frac{100}{92000\,VA}$$

EN

$$\mathbf{GradientWattPerMin} = -600\ \%\ \boldsymbol{Slim}\ \boldsymbol{/min}$$

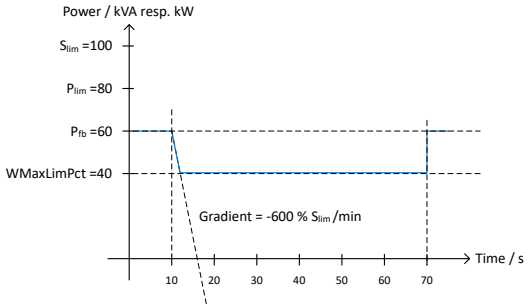

Fig. 80: Power gradient according to sample parameters and calculation

The following formulae are used to calculate the Q filter parameter and cos ϕ gradient:

$$\mathbf{GradientVArPerMin} = \frac{\left(\frac{VArMaxPct}{100} \times Slim - Qactual\right)}{VArPct_RmpTms} \times 60 \times \frac{100}{Slim}$$

Fig. 81: Formula for calculating the Q filter parameter

$$\mathbf{GradientVArPerMin} = \frac{\left(\frac{VArMaxPct}{100} \times Slim - Qactual\right)}{OutPFSet_RmpTms} \times 60 \times \frac{100}{Slim}$$

Fig. 82: Formula for calculating the cos ϕ gradient (internal power gradient)

10.4.1.1 Parameters for permanent power limitation

Country-spec. Settings	Menu level	Display/ Setting	Action in this menu/meaning
		Power limitation ☑ Check activation	Activate or disable the power limitation.
		Maximum apparent power (S_{lim}) 1000 – S_{max} [VA]	The apparent power is limited globally to the configured value in VA. As soon as S_{lim} has been configured, all of the active and reactive power control values will use S_{lim} as 100% instead of S_{max}.
		Maximum active power (P_{lim}) 1 – 100 [% S_{lim}]	Active power is limited globally to the configured value in % S_{lim}.

10.4.2 Soft start up / power ramp-up limiting

A soft start-up function is available to prevent the grid from being negatively impacted by a sudden increase in feed-in power from the inverters.

When the inverter is activated or switched on, the increase in power is restricted by the set gradient. It is possible to configure whether the soft start-up should occur every time the device is switched on, only upon initial start-up each day or only upon start-up after the device has been switched off by grid protection. Due primarily to the fact that there is the risk that many plants could increase their power levels simultaneously after they have been switched off by grid protection, a soft start-up is usually only required for start-up after a device has been switched off by grid protection.

The soft start up is implemented by an absolute power limitation that increases with a continuous gradient up to the maximum power. The actual power of the inverter may vary freely below this limit due to a possible fluctuation in the available power or the target value, but at no time increases above the absolute power limit.

EN

10.5 Advanced islanding detection

NOTE

Limitation During Backup Operation

During **backup operation**, the device intentionally establishes a local island grid (grid-forming operation); **islanding detection** is intentionally **disabled** by the EMS in this operating mode. In this case, galvanic isolation from the public utility grid is ensured by the externally installed Disconnect I (grid protection).

Observe the information in [See section 2.2 Page 9] and [See section 4.5 Page 19].

Due to decentralized generation and energy storage, there is a possibility that a disconnected section of the grid may remain energized as an unintentional island because of a local balance between load and generation. Detecting unintentional islanding during grid-parallel operation is an important protective function of grid-connected units and serves to prevent damage to equipment and ensure the safety of personnel.

Several dangers exist due to the structure and the operation of the distribution grid:

- In case of maintenance work in a distribution grid, personnel may be placed in danger if the deactivated part of the grid remains live as an island. This is especially the case if not all safety rules are followed.
- If fast auto-reclosure is used in a distribution grid and the deactivated part of the grid remains live as an island, reclosure will likely happen during phase displacement which might cause damage to rotating machinery on the grid.
- In the event of a fault in a medium voltage grid, the faulty grid section is disconnected. If the fault is high-impedance, the isolated section remains live as an island. Depending on the type of fault – particularly in the case of a transformer fault – there is a risk of making contact with dangerous medium voltage, and in some circumstances even on low-voltage equipment.

Especially for the last example very fast disconnection of the units connected to the grid is necessary, to cause the collapse of the inadvertent island formation. At the same time any detection method may cause false tripping. The industry is therefore in constant research to develop methods that are fast and reliable and at the same time reliably prevent false tripping.

Methods of Islanding Detection

The advanced islanding detection system uses a strategy for reliable detection of islanding based on the different characteristics of an interconnected grid and an island grid, ensuring fast and reliable detection while avoiding false trips.

An interconnected grid is dominated by rotating machines; consequently, the frequency is proportional to the active power balance and the voltage is proportional to the reactive power balance. An island grid, by contrast, behaves like a resonant circuit; consequently, the frequency is proportional to the reactive power balance and the voltage is proportional to the active power balance. The active islanding detection method recognizes this difference by monitoring the behavior of the grid: It observes the natural fluctuation of the grid frequency and injects a minimal amount of reactive power proportional to the rate of change of frequency. At the moment an unintentional island is formed, a positive feedback loop is created, allowing the device to detect the changed condition and disconnect from the grid. In the event of unintentional islanding, the device disconnects within a few hundred milliseconds, well below 1000 ms.

- The number of devices connected in parallel does not affect the reliability of this function.
- The method minimizes the impact on the distribution grid.
- Under normal operating conditions, there are no observable effects on harmonic distortion, flicker, or grid stability.

This detection method is combined with a two-stage monitoring of the passive Rate of Change of Frequency (ROCOF). If the grid ROCOF exceeds the configured trip threshold (Stage 1) for the configured trip time, the device switches to zero-current mode. If the ROCOF exceeds the trip threshold (Stage 2) for the configured trip time, the device shuts down. In the event of unintentional islanding, the island is disconnected immediately. If the grid stabilizes again—for example, because the ROCOF event was caused by a short disturbance—the device behaves according to the active stage: In Stage 1, it resumes normal operation after a few hundred milliseconds; in Stage 2, after shutdown, the configured reconnection conditions apply.

EN

11 Maintenance and troubleshooting

11.1 Visual inspection

Check the product and cables for externally visible damage and, if applicable, check the operating status indicator. If any damage is found, notify your installer. Repairs may only be carried out by a qualified electrician.

⚠ DANGER

Dangerous voltage due to two operating voltages

Severe injuries or death may occur if the cables and/or terminals/busbars in the device are touched. The discharge time of the capacitors is up to 5 minutes.

1. Only appropriately qualified electricians authorised by the mains supply network operator are permitted to open and maintain the device.
2. Before opening the device: Disconnect the AC and DC sides and wait at least 5 minutes.

NOTE

There are components in the housing of the device which may only be repaired by the customer service team.

1. Do not attempt to repair faults that are not described here (in the chapter on troubleshooting and fault rectification). Contact our Customer Service department. Only carry out maintenance activities that are described here.
2. Log each maintenance activity in the "Service" menu item: "Service Log" (exception: "User" interface) [See section 9.4.2 Page 50]
3. The device should be checked for proper operation by a qualified electrician at regular intervals and if you experience problems, you should always contact the system manufacturer's Service department.

11.2 Routine check

The maintenance measures listed in this chapter must be carried out at regular intervals in order to maintain the performance and service life of the device.

11.2.1 Routine check

No.	Category	Inspection Point	Description	Intervall Standard	Intervall Harsh Environment*	Criticality / Comment	Chapter-Ref.
1	Visual inspection	Enclosure, cables, connections and status indicator	The enclosure, cables, electrical connections and status indicator shall be visually inspected for externally visible damage.	12 months	6 months	medium	[See section 7 Page 26]
2	Visual Inspection	Contamination / Air Pathways	Inspect air inlets and outlets for dust, plant debris, insects, and deposits.	12 months	3 months	high / For agri-PV, consider increased contamination from mowing and soil cultivation.	[See section 11.3 Page 100]
3	Cooling	Fan function	Check internal and external fans for function, noise, and plausible operating behavior.	12 months	6 months	high	[See section 11.3 Page 100]
4	Electrical	AC Connection	Check tightness, heating, corrosion, mechanical stress, and cable lugs.	12 months	6 months	high	[See section 7.4 Page 27]

EN

No.	Category	Inspection Point	Description	Intervall Standard	Intervall Harsh Environment*	Criticality / Comment	Chapter-Ref.
5	Electrical	DC Connection / Strings	Inspect DC connections and cable condition.	12 months	6 months	high	Connecting the PV generator to the device
6	Electrical	Equipotential Bonding / Grounding	Inspect grounding and equipotential bonding connections.	12 months	6 months	high	[See section 7.7 Page 31]
7	Protection	Surge Protection	Check SPD status and condition of surge protection devices.	12 months	6 months	high	Replacing overvoltage protection
8	Operation	Fault Messages / Events	Review active and historical messages as well as service notifications.	6 months	3 months	high	Event messages
9	Operation	Plausibility of Operating Values	Verify plausibility of temperatures, status, feed-in, voltages, and currents	6 months	3 months	high	[See section 9.4 Page 49]
10	Grid behavior	Pset vs. Actual Power	Compare setpoint/actual power and check response to power curtailment.	12 months	6 months	high	[See section 10.2 Page 83]
11	Grid behavior	Reactive Power behavior	Verify plausibility of Q control / cos ϕ / Q(U) based on operating data.	12 months	6 months	high	[See section 10.1 Page 76]
12	Grid behavior	Derating behavior	Inspect and document thermal / voltage-related derating.	12 months	6 months	medium	Extended technical Data
13	Communication	Ethernet / RS485 / Remote Access	Check communication, logger / SCADA, and remote access.	12 months	6 months	medium	[See section 8.2 Page 38]
14	Software	Firmware Version	Check firmware version and assess update requirements.	12 months	6 months	medium	[See section 9.3 Page 46]
15	Service	Back Up Log Data	Export and archive service and event logs.	12 months	6 months	medium	[See section 9.4.2 Page 50]
16	Service	Back Up Parameter Set	Export / document parameter set.	12 months	6 months	medium	[See section 9.4.2 Page 50]
17	Documentation	Document Maintenance	Document anomalies, corrective actions, and spare parts.	12 months	6 months	medium	[See section 9.4.2 Page 50]

*) Harsh environment: Sandy locations, coastal proximity (< 500 m), high humidity, industrial environments with dust and/or gas exposure, continuously elevated ambient temperature > 45°C.

EN

11.3 Cleaning

11.3.1 Cleaning the housing

⚠ CAUTION

Risk of damage to the device during cleaning!

1. Do not use compressed air or high-pressure cleaners.
2. Use a vacuum cleaner or a soft brush to remove dust from the fan cover and from the top of the device on a regular basis.
3. Remove dust from the ventilation inlets if necessary.

11.3.2 Cleaning the heat sink

NOTE

Refer to our service and guarantee conditions on our homepage.

✓ The cleaning intervals must be adapted to the environmental conditions of the installation site.

1. In sandy environments, we recommend cleaning the heat sinks and fans every three months.

↻ Cleaning the heat sink requires the fan to be removed.
↻ Switch off the device and secure it against restart.
↻ Keep a suitable brush ready for cleaning.

1. Remove the hood and fan [See section 11.4 Page 101].
2. Clean the free space between the cover and the heat sink using suitable brushes.
3. Clean the heat sink with a suitable brush.

. **NOTE: Do not use any aggressive cleaning agents and ensure that no other components come into contact with fluids.**

⇨ Cleaning completed – if necessary, remount the fans.

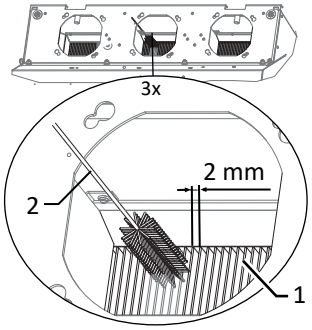

Fig. 83: Cleaning cooling fins from above

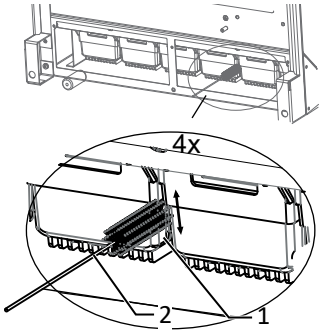

Fig. 84: Cleaning cooling fins from below

1 Heat sink / space between heat sink
2 Brush (max. wire diameter 2 mm)

EN

11.4 Replacing the fan

Removing cover

↻ Ensure that the device is completely free of AC/DC voltage.

1. Loosen screws which fasten the cover on both sides [🔧_T20]
2. Lift the cover on both sides and press it out of the mounting clips.
3. Place the cover to one side.

⇨ Proceed with cleaning or dismantling the fans.

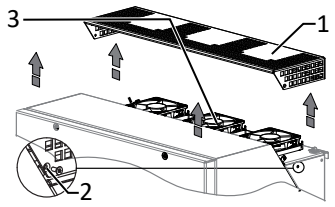

Fig. 85: Remove the cover

1 Cover
2 Screw for fixing
3 Mounting clips
4 Fan

Dismounting the fan

↻ Replace fan time requirement: (10 min each fan) 30 min
↻ It has been ensured that there is no AC/DC voltage present.
↻ **DANGER! Risk of injury from starting fans: If the device is not completely disconnected from the voltage source, the fan may start up unexpectedly and sever or injure limbs. This may also cause damage to the fan and impair the functionality of the device.**
↻ Cover hood for fans removed.

1. Wait until the 3 fans have stopped rotating.
2. Rotate the defective fan through approx. 10° in the clockwise direction and remove it carefully using the collar.
3. Release the interlock and remove the connector plug from the inside of the housing.
4. Remove the fan.
5. If necessary, clean the heat sink from above.

⇨ Install the replacement fan.

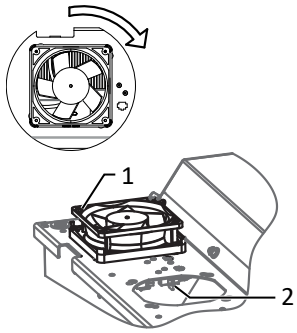

Fig. 86: Dismounting the fan

1 Fan
2 Connector plug

Fitting the fan

↻ You have removed the defective fan.

1. Plug in the connector plug of the new fan at the connection socket provided within the housing and check the interlock.
2. Insert the replacement fan into the collar holder.
3. Screw in the fan anti-clockwise by about 10°.
4. If necessary, insert another fan.

⇨ Fit the cover back in place.

Removing the interior fan

↻ Ensure that the device is completely free of AC/DC voltage.
↻ **DANGER! Risk of injury from starting fans: If the device is not completely disconnected from the voltage source, the fan may start up unexpectedly and sever or injure limbs. This may also cause damage to the fan and impair the functionality of the device.**
↻ Remove the housing cover. [See section 7.1 Page 26]

1. Wait until the interior fan is no longer turning.
2. Loosen the fastening screw from the circuit board.
3. Move the interior fan to the front area.
4. Unlock the power supply to the connector.
5. Detach the fan grille from the housing.
6. Remove dust and dirt particles from the housing.

⇨ Install the replacement fan.

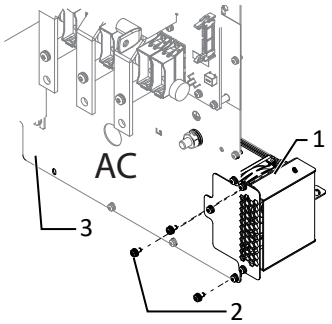

Fig. 87: Removing the interior fan

1 Interior fan
2 Fastening
3 Board

EN

Fitting the interior fan

NOTE: If an internal fan fails, an error message is displayed and the device limits its output to a maximum of 50% of the maximum possible output, unlike an external fan.

↻ You have removed the interior fan.

1. Slide the collar with the fan lengthways off the housing and lift it out.
2. Carefully pull the connected fan off the collar.
3. Press the replacement fan into the collar holder.
4. Plug the connector plug of the interior fan into the connection socket provided and check that it is locked.
5. Insert the collar with the fan into the housing and check that it is firmly seated.
6. Mount the fan grille on the housing.
7. Mount the ventilating plate on the board.

⇨ Interior fan successfully replaced.

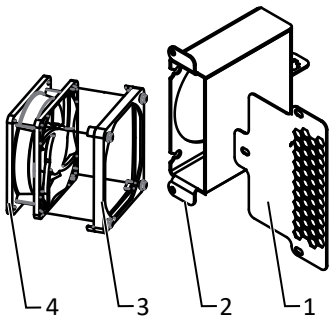

Fig. 88: Disconnecting the interior fan

1 Fan grille
2 Housing
3 Collar
4 Fan

Putting on cover

↻ Fan proficiently installed and area of the cover cleared of foreign matter.

1. Place the cover on the mounting clips from both sides and press in carefully.
2. Insert the fastening screws into the cover on both sides and tighten them [_T20 / 2 Nm].

⇨ Proceed with the start-up of the device [See section 8 Page 37].

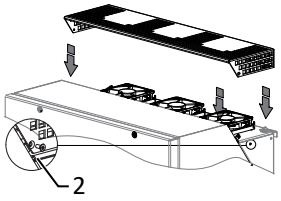

Fig. 89: Putting on cover

2 Screw for fixing

11.5 Shutting down for maintenance

NOTE: Shutdown sequence

1. If possible, shut down the device via EMS.
2. Switch off the grid voltage by turning off the external circuit breakers.
3. Enable the DC side via the external DC switch.

⇨ After shutdown, wait 5 minutes before opening the device.

11.6 Replace DC fuse

↻ Device is free of DC voltage.

. **NOTE: Do not damage or remove the side insulator fastening!**

1. Loosen and remove [W17] the DC fuse (F1) at the upper and lower lock nuts by bracing the support bolt [W35].
2. Insert the new specified DC fuse in the intended position and secure it [W17 / 5 Nm] with the lock nuts by bracing the support bolt [W35].
3. DC fuse replaced. Continue connecting the battery.

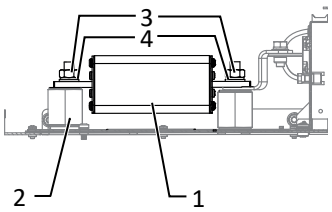

Fig. 90: Replace DC fuse

EN

11.7 Troubleshooting

11.7.1 Procedure



⚠ DANGER

Lethal voltages are still present in the connections and cables of the device even after the device has been switched off and disconnected!

Severe injuries or death may occur if the cables and/or terminals/busbars in the device are touched.

1. If a fault occurs, notify an appropriately authorised and qualified electrician or KACO new energy GmbH Service.
2. The operator can only carry out actions marked with a B.

11.7.2 Rectifying the cause

B = Operator's responsibility; E = The indicated work may only be carried out by an authorised electrician! ; K = The indicated work may only be carried out by a service employee of KACO new energy GmbH!

Fault	Possible cause	Explanation/remedy	from
The LEDs do not light up	Grid voltage not available	› Check whether the DC and AC voltages are within the permitted limits (see Technical Data)	E
		› Notify KACO Service.	E
The device stops charging or discharging the battery shortly after being switched on.	Defective circuit-breakers in the device	If the circuit-breakers are defective, the device will recognize this during the self-test.	K
		› Ensure that there is sufficient battery power.	E
		› If the coupling switch is defective, have it replaced by KACO Service.	
		› Notify KACO Service.	
Device is active but not connected to the grid. A grid fault is displayed on the status LED.	Charging or discharging has been interrupted due to a grid fault.	Due to a grid fault (over/undervoltage, over/underfrequency), the device stops the charging or discharging process and disconnects from the grid for safety reasons.	E
The grid fuse trips.	The grid fuse capacity is too low.	Select the capacity of the device's backup fuse to be somewhat higher than the maximum feed-in current (see the "Installation" section).	E
		› Contact the grid operator if the grid failure continues to occur.	E
The grid fuse trips.	Hardware damage on the device.	If the grid fuse trips immediately when the device goes into feed-in mode (after the start-up period is complete), the device's hardware is probably damaged.	
		› Contact KACO Service to test the hardware.	E
		› No action.	
Device is active but not connected to the grid.	Battery voltage too low; grid voltage or battery voltage unstable.	The battery voltage is too low to connect to the grid. The device checks the grid parameters before the feed-in process. The length of time it takes to switch back on again differs from country to country, depending on applicable standards and regulations, and may be several minutes. The starting voltage may be set incorrectly.	
		› Adjust starting voltage in the Parameter menu.	E
		Please inform your system manufacturer in order to test the EMS.	

EN

Fault	Possible cause	Explanation/remedy	from
The device is not feeding the maximum power into the grid	Particular ambient conditions.	The device has reduced its power due to the temperature inside the device being too high. Check the fans and ensure the cooling fins are unobstructed. Note the technical data.	
		› Ensure sufficient cooling of the device.	B
		› Remove any foreign bodies which are present on the unit.	B
		› Clean the cooling fins	E
	DC fuse defective	If the DC breaker trips immediately when the device is connected to the battery, there may be hardware damage present.	B, E

Tab. 8: Troubleshooting

11.8 Messages

Many event messages indicate a fault in the grid. They are not operational faults of the device. The triggering levels are defined in standards, e.g. VDE0126-1-1. The device shuts down if the values exceed or fall below the approved levels.

Fault LED (red)	Status	Explanation	LED
	FS (fault status)	– Fault signal relay has been tripped.	On
		– Feed-in was ended due to a fault.	
	OS (operating status)	– The fault relay releases again.	Off
		– The device feeds back into the grid again after a country-specific time period.	

NOTE

Status & fault messages

An overview of all existing status and fault messages can be found in the corresponding integration manual, which can be obtained from our KACO sales team (pv-projects.kaco.de@siemens.com).

EN

12 Decommissioning and dismantling

12.1 Switching off the device



⚠ WARNING

Risk of burns caused by hot housing components

Housing components can become hot during operation.

1. During operation, only touch the housing cover on the device.

1. Switch off the device on the external DC isolator switch.
2. Use a clip-on ammeter to check that there is no AC and DC voltage present.

⇨ Ensure that the device is completely free of voltage.

⇨ Device can be uninstalled.

12.2 Disconnecting connections

12.2.1 AC connection

↻ Device is free of AC/DC voltage.

↻ Housing cover removed and put to one side.

1. Detach cables (L1/L2/L3/N) from the AC connection terminal [🔧W_17].
2. Detach the PE line from the earthing bolt [🔧W_17].
3. Loosen the cable fitting and pull the cables out through the cable fitting [🔧W_46].

. **NOTE: If the AC line does not fit through the cable glands due to the cable lug size, cut off the AC line on the cable lug.**

4. Place protective caps on the ends of the AC cables.

12.2.2 DC connection

↻ Ensure that the device is completely free of AC/DC voltage.

1. Detach the DC cables on the DC+ and DC- terminals [🔧W_17 (M, L, XL)]
2. Unfasten the cable fitting and pull the DC line through the cable fitting [🔧W_46]

12.3 Uninstalling the device



⚠ DANGER

Dangerous voltage due to two operating voltages

Severe injuries or death may occur if the cables and/or terminals/busbars in the device are touched. The discharge time of the capacitors is up to 5 minutes.



1. Only appropriately qualified electricians authorised by the mains supply network operator are permitted to open and maintain the device.
2. Before opening the device: Disconnect the AC and DC sides and wait at least 5 minutes.

↻ The device is switched off and a check has been performed to ensure that it is de-energised.

↻ AC cable disconnected [See section 12.2.1 Page 105].

↻ DC connection disconnected [See section 12.2.2 Page 105].

1. Undo the cable fitting for Ethernet cables [🔧W_29].
2. Disconnect the plug from the communication circuit board.
3. Remove the interface cables from the device.
4. Insert the sealing plug in all open cable fittings.

⇨ The device has been uninstalled. Proceed with removal.

12.4 Removing the device

↻ Device has been switched off and uninstalled.

1. Remove the screw that prevents the device from being detached from the mount.
2. Use the lateral openings and lift the device off the mount.

⇨ Device removed. Proceed with the packaging process.

EN

12.5 Packaging the device

↻ Device has been uninstalled.

1. If possible, always pack the device in the original packaging. If this is no longer available, an alternative is to use equivalent packaging.
2. You must be able to close the box completely and it must be able to accommodate the weight and size of the device.

12.6 Storing the device

NOTE

Risk of damage to property as a result of condensation

Faulty storage can form condensate in the device and impair the device functioning (e.g. storage outside the ambient conditions or temporary relocation from a cold to a hot environment).

1. Prior to installation, check the inner area for condensation and if necessary, allow it to dry sufficiently before installation.
2. Store in accordance with the technical data > [See section 4.3 Page 18]

↻ Device packaged.

1. Keep the device in its original packaging.
2. The packaging containing the device must not be tilted over or turned upside down.
3. Store the device at a dry location, in accordance with the ambient temperature range [See section 4.3 Page 18].
4. If the device has been stored for 6 months or longer, it must be completely inspected and tested by specialists before it can be put into operation.

13 Disposal



⚠ CAUTION

Risk to the environment if disposal is not carried out in the correct manner

For the most part, both the device and the corresponding transport packaging are made from recyclable raw materials.

Device: Do not dispose of faulty devices or accessories together with household waste. Ensure that the old devices and any accessories are disposed of in a proper manner.

Packaging: Ensure that the transport packaging is disposed of properly.

EN

14 Service and warranty

If you need help solving a technical problem with KACO products, please contact our service hotline.

Please have the following information ready so that we can help you quickly and efficiently:

- Device name / serial number
- Date of installation / Start-up report
- Fault message shown by the status LEDs / Description of the fault / Did you notice anything unusual? / What has already been done to analyse the fault?
- Error code
- Consignment identification / Delivery address / Contact person (with telephone number)
- Information about the accessibility of the installation site

You can find the following items and other information at our website Kaco-newenergy:

- our current warranty conditions,
- a complaint form,
- a form for registering your device. Please register your device without delay. In this manner, you can assist us in providing you with the quickest service possible.

EN

15 Appendix

15.1 EU Declaration of Conformity (EN)

Manufacturer's name and address	KACO new energy GmbH Werner-von-Siemens-Allee 1 74172 Neckarsulm, Germany
Product description	Grid-tied battery inverter with backup function

Modules *[KACO art. no.]*	BLUEPLANET GRIDSAVE BACKUP 100 IIGM	[1002350]
	BLUEPLANET GRIDSAVE BACKUP 100 IIGL	[1002351]
	BLUEPLANET GRIDSAVE BACKUP 100 IIGXL	[1002352]
	BLUEPLANET GRIDSAVE BACKUP 120 IIKM	[1002353]
	BLUEPLANET GRIDSAVE BACKUP 120 IIKL	[1002354]
	BLUEPLANET GRIDSAVE BACKUP 120 IIKXL	[1002355]
	BLUEPLANET GRIDSAVE BACKUP 150 IIPM (600V)	[1002356]
	BLUEPLANET GRIDSAVE BACKUP 150 IIPL (600V)	[1002357]
	BLUEPLANET GRIDSAVE BACKUP 150 IIPXL (600V)	[1002358]
	BLUEPLANET GRIDSAVE BACKUP 165 IIQM (660V)	[1002410]
	BLUEPLANET GRIDSAVE BACKUP 165 IIQL (660V)	[1002412]
	BLUEPLANET GRIDSAVE BACKUP 165 IIQXL (660V)	[1002413]
Type designation *[KACO Art. No.]* **Without backup function!**	BLUEPLANET GRIDSAVE HV 100 IIGM	[1002442]
	BLUEPLANET GRIDSAVE HV 100 IIGL	[1002443]
	BLUEPLANET GRIDSAVE HV 100 IIGXL	[1002444]
	BLUEPLANET GRIDSAVE HV 120 IIKM	[1002445]
	BLUEPLANET GRIDSAVE HV 120 IIKL	[1002446]
	BLUEPLANET GRIDSAVE HV 120 IIKXL	[1002447]
	BLUEPLANET GRIDSAVE HV 150 IIPM	[1002448]
	BLUEPLANET GRIDSAVE HV 150 IIPL	[1002449]
	BLUEPLANET GRIDSAVE HV 150 IIPXL	[1002450]
	BLUEPLANET GRIDSAVE HV 165 IIQM	[1002451]
	BLUEPLANET GRIDSAVE HV 165 IIQL	[1002452]
	BLUEPLANET GRIDSAVE HV 165 IIQXL	[1002453]

15.2 Standards & directives

The above-mentioned devices comply with **Directive 2014/35/EU** of the European Parliament and of the Council of 26 February 2014 (Low Voltage Directive), **Directive 2014/30/EU** of the European Parliament and of the Council of 26 February 2014 (EMC guideline) and **Directive 2011/65/EU** of the European Parliament and of the Council of 8 June 2011 (RoHS Directive).

The devices conform to the following standards:

2014/35/EU	Safety of the device
"Directive relating to electrical equipment designed for use within certain voltage limits"	EN 62109-1:2010 EN 62109-2:2011
2014/30/EU	Interference immunity

EN

"Directive relating to electromagnetic compatibility"	EN IEC 61000-6-2:2019 EN 62920:2017 + A11:2020 + A1:2021 Class A Emitted interference EN IEC 61000-6-4:2019 EN 55011:2016 + A1:2017 + A11:2020 + A2:2021 group 1, Class A EN 62920:2017 + A11:2020 + A1:2021 Class A Secondary effects on the grid EN 61000-3-11:2000 EN IEC 61000-3-11:2019 EN 61000-3-12:2011+A1:2024
2011/65/EU	RoHS
"Directive on the restriction of the use of certain hazardous substances in electrical and electronic equipment"	EN IEC 63000:2018 (Technical documentation for the assessment of electrical and electronic equipment with regard to the restriction of hazardous substances)

The types mentioned above are therefore labelled with the CE mark.

Unauthorised modifications to the supplied devices and/or any use of the devices that is contrary to their intended use render this Declaration of Conformity null and void.

This Declaration of Conformity is issued under the sole responsibility of KACO new energy GmbH.

3017245-01-261009

The text and figures reflect the current technical state at the time of printing. Subject to technical changes. No liability for printing errors.

KACO new energy.

Werner-von-Siemens-Allee 1 · 74172 Neckarsulm · Germany · Tel. +49 7132 896-0 · info@kaco-newenergy.de · www.kaco-newenergy.de