SUNPOWER

SPR-3301f-1 / SPR-3801f-1 / SPR-6501f-1 / SPR-7501f-1 / SPR-10001f-1 / SPR-11401f-1 / SPR-11401f-3 / SPR-12001f-3



(USA) **Operating Instructions**

Inverter for grid-connected photovoltaic systems

42,0426,0090,EA 022010

DMS # 001-67202 Rev.**

Dear reader,

Introduction

Thank you for the trust you have placed in our company and congratulations on buying this high-quality SunPower product. These instructions will help you familiarize yourself with the product. Reading the instructions carefully will enable you to learn about the many different features your SunPower product has to offer. This will allow you to make full use of its advantages.

Please also note the safety rules to ensure greater safety when using the product. Careful handling of the product will repay you with years of safe and reliable operation. These are essential prerequisites for excellent results.

IMPORTANT SAFETY INSTRUCTIONS SAVE THESE INSTRUCTIONS

General

These operating instructions contain important instructions for the SunPower SPR-f that must be followed during installation and maintenance of the inverter.

The SunPower SPR-f is designed and tested according to international safety requirements, but as with all electrical and electronic equipment, certain precautions must be observed when installing and/or operating the SunPower SPR-f.
To reduce the risk of personal injury and to ensure the safe installation and operation of the SunPower SPR-f, you must carefully read and follow all instructions and safety instructions in these operating instructions.

Electrical installations

All electrical installations must be carried out in accordance with the National Electrical Code, ANSI/NFPA 70, and any other codes and regulations applicable to the installation site.

For installations in Canada, the installations must be done in accordance with applicable Canadian standards.

Contents

Safety rules 9

General Information **15**

Protection of Persons and Equipment 17
Safety 17
Protection of Persons and Equipment 17
Galvanic isolation 17
Monitoring the Grid 17
Information on "field adjustable trip points" 18
FCC compliance 18
Ground fault detector / interrupter 18
Standards and regulations 18
Declaration of conformity 18
The SunPower SPR-f in the photovoltaic system 19
General 19
Tasks 19
Converting DC to AC Current 19
Fully Automatic Operational Management 20
Display function and data communication 20
System upgrade 20
Forced Ventilation 20
Power derating 21

Installation and Startup **23**

SunPower SPR-f installation and connection 25
Safety 25
SunPower SPR-f construction 25
Connection diagram 26
Overview 26
Choosing the Location 27
Choosing the location in general 27
Choosing a Location for Inside Installation 28
Choosing a location for outdoor installation 28
SunPower SPR-f connection options 29
Connection Options 29
Knockouts on the SunPower SPR-f 31
General 31
Knockouts for wire inputs 31
SunPower SPR-f installation 33
General 33
Assembling the wall bracket 33
Recommended screws for wall bracket assembly 33
Attaching the wall bracket - mounting height 33
Attaching the wall bracket to a concrete or brick wall 34

Attaching the wall bracket to a wooden wall 34
Attaching the wall bracket to a metal carrier 35
Lifting the Inverter 35
Installing the inverter 36
Installation of several inverters 37
Connecting the SunPower SPR-f to the public grid (AC) 38
Overview of available grids 38
Monitoring the Grid 40
Systems with more than one inverter 41
AC-side terminals and grounding terminals 41
Cross section of AC wires 42
Safety 43
Connecting the SunPower SPR-f to the public grid (AC) 44
Connecting grounding electrode wire 45
Recommendation for the AC-side overcurrent protection 45
Additional external AC and/or DC disconnect 46
Connecting solar module strings to the SunPower SPR-f (DC) 47
General information about solar modules 47
Safety 47
DC terminals 48
Polarity reversal of solar module strings 48
Overview 48
Solar Module Ground at Positive Pole: Connecting Solar Module Strings 49
Solar Module Ground at Positive Pole 49
Wire cross section of solar module strings 50
Solar Module Ground at Positive Pole: Connecting Solar Module Strings 50
Criteria for the Proper Selection of String Fuses 54
DC disconnect requirements 54
General 54
Criteria for the proper selection of string fuses 54
Effects of Using Underrated Fuses 54
Fuse recommendations 55
Application example 55
Solar Module Ground at Negative Pole: Connecting Solar Module Strings 56
Solar Module Ground at Negative Pole 56
Wire cross section of solar module strings 57
Solar module ground at negative pole: Connecting solar module strings 57
Criteria for the Proper Selection of String Fuses 62
DC disconnect requirements 62
General 62
Criteria for the proper selection of string fuses 62
Effects of Using Underrated Fuses 62
Fuse recommendations 63
Application example 63
Closing the inverter 64
Closing the inverter 64
Opening the SunPower SPR-f for service/maintenance 64
Commissioning 65
Factory pre-set configuration 65

Requirements for start-up operation 65
Commissioning 65
Selecting the grid 66
Setting the inverter for solar module ground at negative pole 69
Startup phase during startup operation 71

Operation **73**

Product description SunPower SPR-f 75
Controls and Indicators 75
Display 76
Operating Status LED 77
Startup Phase and Grid Feed-in Mode 79
Startup phase 79
Test procedure 79
Operation of Feeding Energy into the Grid 80
Navigation in the Menu Level 81
Activating display illumination 81
Accessing the Menu Level 81
The Display Modes 82
Display modes 82
Selecting a display mode 82
Overview of display values 83
Display Values in "Now" Display Mode 84
Selecting the "Now" Display Mode 84
Display values in the ‘Now’ display mode 84
"N.A." - display value not available 86
Display values in the Day / Total display modes 87
General 87
Selecting "Day / Total" display modes 87
Display values in the ‘Day / Total’ display modes 88
"N.A." - display value not available 89
The Setup Menu 90
Presetting 90
Accessing the Setup Menu 90
Scrolling through Menu Items 91
Menu Items in the Setup Menu 92
STANDBY 92
CONTRAST 93
LIGHT MODE 93
CASH 93
CO2 94
YIELD 94
IG no. 95
DAT COM 95
STATE PS 95
VERSION 96
Setting and Displaying Menu Items 97
Setting Menu Items - General 97

Application example: setting the currency and rate 98

Troubleshooting and Maintenance **101**

Status Diagnosis and Troubleshooting 103
Displaying Status Codes 103
Normal Operation Status Codes 103
Total failure 103
Status codes on SunPower SPR-f with several power stage sets 104
Class 1 Status Codes 105
Class 2 Status Codes 107
Class 3 status codes 108
Class 4 status codes 110
Class 5 status codes 119
Customer Service 123
Maintenance 124
Safety 124
General 124
Operation in Dusty Environments 125
Opening the SunPower SPR-f for service/maintenance 125
Replacing String Fuses 126
Safety 126
Preparation 126
Replacing string fuses 127
Finally... 128
Replacing GFDI fuse 130
Safety 130
Preparation 130
Replacing GFDI fuse 131
Finally... 132

Appendix **133**

Technical Data 135
SunPower SPR-3301f-1 UNI 135
SunPower SPR-3801f-1 UNI 137
SunPower SPR-6501f-1 UNI 139
SunPower SPR-7501f-1 UNI 141
SunPower SPR-10001f-1 UNI 143
SunPower SPR-11401f-1 UNI 145
SunPower SPR-11401f-3-208/240 Delta 147
SunPower SPR-12001f-3-277 WYE 149
Field adjustable trip points 151
Relevant Standards and Directives 152
Relevant standards and directives 152
Grid Failure 152

Safety rules

Safety Rules Explanation

DANGER! Indicates an imminently hazardous situation which, if not avoided, will result in death or serious injury.

WARNING! Indicates a potentially hazardous situation which, if not avoided, will result in death or serious injury.

CAUTION! Indicates a potentially harmful situation which, if not avoided, may result in minor and moderate injury or property damage.

NOTE! Indicates a risk of flawed results and possible damage to the equipment.

IMPORTANT! Indicates tips for correct operation and other particularly useful information. It does not indicate a potentially damaging or dangerous situation.

If you see any of the symbols depicted in the "Safety rules," special care is required.

General

The device is manufactured using state-of-the-art technology and according to recognized safety standards. If used incorrectly or misused, however, it can cause

- injury or death to the operator or a third party,
- damage to the device and other material assets belonging to the operator,
- inefficient operation of the device

All persons involved in commissioning, maintaining and servicing the device must

- be suitably qualified,
- have knowledge of and experience in dealing with electrical installations and
- read and follow these operating instructions carefully

The operating instructions must always be at hand wherever the device is being used. In addition to the operating instructions, attention must also be paid to any generally applicable and local regulations regarding accident prevention and environmental protection.

All safety and danger notices on the device

- must be kept in a legible state
- must not be damaged/marked
- must not be removed
- must not be covered, pasted or painted over

For the location of the safety and danger notices on the device, refer to the section headed "General" in the operating instructions for the device.

Before switching on the device, remove any faults that could compromise safety.

Your personal safety is at stake!

Utilization in Accordance with "Intended Purpose"



The device is to be used exclusively for its intended purpose.

Utilization for any other purpose, or in any other manner, shall be deemed to be "not in accordance with the intended purpose." The manufacturer shall not be liable for any damage resulting from such improper use.

Utilization in accordance with the "intended purpose" also includes

- carefully reading and obeying all the instructions and all the safety and danger notices in the operating instructions
- performing all stipulated inspection and servicing work
- installation as specified in the operating instructions

The following guidelines should also be applied where relevant:

- Regulations of the power supply company regarding energy fed into the grid
- Instructions from the solar module manufacturer

Environmental Conditions



Operation or storage of the device outside the stipulated area will be deemed as "not in accordance with the intended purpose." The manufacturer is not responsible for any damages resulting from unintended use.

For exact information on permitted environmental conditions, please refer to the "Technical data" in the operating instructions.

Qualified Service Engineers



The servicing information contained in these operating instructions is intended only for the use of qualified service engineers. An electric shock can be fatal. Do not perform any actions other than those described in the documentation. This also applies to those who may be qualified.



All cables and leads must be secured, undamaged, insulated and adequately dimensioned. Loose connections, scorched, damaged or inadequately dimensioned cables and leads must be immediately repaired by authorized personnel.



Maintenance and repair work must only be carried out by authorized personnel.

It is impossible to guarantee that externally procured parts are designed and manufactured to meet the demands made on them, or that they satisfy safety requirements. Use only original replacement parts (also applies to standard parts).

Do not carry out any modifications, alterations, etc. without the manufacturer's consent.

Components that are not in perfect condition must be changed immediately.

Safety Measures at the Installation Location

When installing devices with openings for cooling air, ensure that the cooling air can enter and exit unhindered through the vents. Only operate the device in accordance with the degree of protection shown on the rating plate.

Data Regarding Noise Emission Values



The inverter generates a maximum sound power level of < 80 dB(A) (ref. 1 pW) when operating under full load in accordance with IEC 62109-1.

The device is cooled as quietly as possible with the aid of an electronic temperature control system, and depends on the amount of converted power, the ambient temperature, the level of soiling of the device, etc.

It is not possible to provide a workplace-related emission value for this device, because the actual sound pressure level is heavily influenced by the installation situation, the power quality, the surrounding walls and the properties of the room in general.

EMC device classifications



Devices with emission class A:

- are only designed for use in an industrial setting
- can cause line-bound and radiated interference in other areas

Devices with emission class B:

- satisfy the emissions criteria for residential and industrial areas. This is also true for residential areas in which the energy is supplied from the public low voltage grid.

EMC device classification as per the rating plate or technical data.

EMC Measures



In certain cases, even though a device complies with the standard limit values for emissions, it may affect the application area for which it was designed (e.g., when there is sensitive equipment at the same location, or if the site where the device is installed is close to either radio or television receivers). If this is the case, then the operator is obliged to take appropriate action to rectify the situation.

Grid Connection

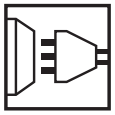

High-performance devices (> 16 A) can affect the voltage quality of the grid because of a high output current in the main supply.

This may affect a number of types of device in terms of:

- connection restrictions
- criteria with regard to maximum permissible mains impedance *)
- criteria with regard to minimum short-circuit power requirement *)

*) at the interface with the public grid

see Technical Data

In this case, the operator or the person using the device should check whether or not the device is allowed to be connected, where appropriate through discussion with the power supply company.

Electrical Installations



Electrical installations must only be carried out according to relevant national and local standards and regulations.

Protective Measures against ESD



Danger of damage to electrical components from electrical discharge. Suitable measures should be taken to protect against ESD when replacing and installing components.

Safety Measures in Normal Operation



Only operate the device when all protection devices are fully functional. If the protection devices are not fully functional, there is a risk of

- injury or death to the operator or a third party,
- damage to the device and other material assets belonging to the operator,
- inefficient operation of the device

Any safety devices that are not functioning properly must be repaired by authorized personnel before the device is switched on.

Never bypass or disable protection devices.

Safety Symbols



Devices with the CE marking satisfy the essential requirements of the low-voltage and electromagnetic compatibility directives. (Further details can be found in the appendix or the chapter entitled "Technical data" in your documentation.)

Disposal



Do not dispose of this device with normal domestic waste! To comply with the European Directive 2002/96/EC on Waste Electrical and Electronic Equipment and its implementation as national law, electrical equipment that has reached the end of its life must be collected separately and returned to an approved recycling facility. Any device that you no longer require must be returned to your dealer, or you must locate the approved collection and recycling facilities in your area. Ignoring this European Directive may have potentially adverse affects on the environment and your health!

Backup

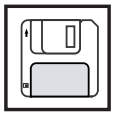

The user is responsible for backing up any changes made to the factory settings. The manufacturer accepts no liability for any deleted personal settings.

Copyright



Copyright of these operating instructions remains with the manufacturer.

Text and illustrations are technically correct at the time of going to print. The right to make modifications is reserved. The contents of the operating instructions shall not provide the basis for any claims whatsoever on the part of the purchaser. If you have any suggestions for improvement, or can point out any mistakes that you have found in the operating instructions, we will be most grateful for your comments.

General Information

Protection of Persons and Equipment

Safety

WARNING! An electric shock can be fatal. Danger from grid voltage and DC voltage from solar modules.

- The connection area should only be opened by a licensed electrician.
- The separate power stage set area should only be disconnected from the connection area after first being disconnected from the grid power.
- The separate power stage set area should only be opened by trained service personnel.

Never work with live wires! Prior to all connection work, make sure that the AC and DC wires are not charged.

WARNING! If the equipment is used or tasks are carried out incorrectly, serious injury or damage may result. Only qualified personnel are authorized to install your inverter and only within the scope of the respective technical regulations. It is essential that you read the "Safety regulations" chapter before commissioning the equipment or carrying out maintenance work.

Protection of Persons and Equipment

The design and function of the inverter offer a maximum level of safety, both during installation as well as operation.

The inverter provides operator and equipment protection through:

a) galvanic isolation
b) monitoring the grid

Galvanic isolation

The inverter is equipped with a high frequency transformer that ensures galvanic isolation between the DC side and the grid, thus ensuring the highest possible safety.

Monitoring the Grid

Whenever conditions in the electric grid are inconsistent with standard conditions (for example, grid switch-off, interruption), the inverter will immediately stop operating and interrupt the supply of power into the grid.

Grid monitoring is carried out using:

- Voltage monitoring
- Frequency monitoring
- Monitoring islanding conditions

Information on "field adjustable trip points"

The inverter is equipped with field adjustable trip points. For further information, please contact SunPower Corp. technical support at the following e-mail address: techsupport@sunpowercorp.com.

FCC compliance



This device complies with Part 15 of the FCC Rules. Operation is subject to the following conditions:
(1) This device may not cause harmful interference, and
(2) This device must accept any interference received, including interference that may cause undesired operation.

Ground fault detector / interrupter

The inverter is equipped with a ground fault detection and interruption (GFDI) circuit as required by UL 1741 and the National Electrical code. Depending on the system configuration either the PV array's negative or positive conductor is connected to the grounding system in the inverter. If a ground fault occurs in the DC wiring, the inverter disconnects from the grid.

Standards and regulations

Your inverter complies with the requirements for the following standards "Inverters, converters and controllers for use in independent power systems":

- UL1741-2005
- IEEE 1547-2003
- IEEE 1547.1
- ANSI / IEEE C62.41
- C22.2 No. 107.1-01 (Sep. 2001)

The ground-fault detection and interruption is in compliance with NEC 690 building code requirements.

Declaration of conformity

Relevant declarations of conformity can be found in the appendix to these operating instructions.

The SunPower SPR-f in the photovoltaic system

General

The solar inverter is the highly complex link between the solar modules and the public grid.

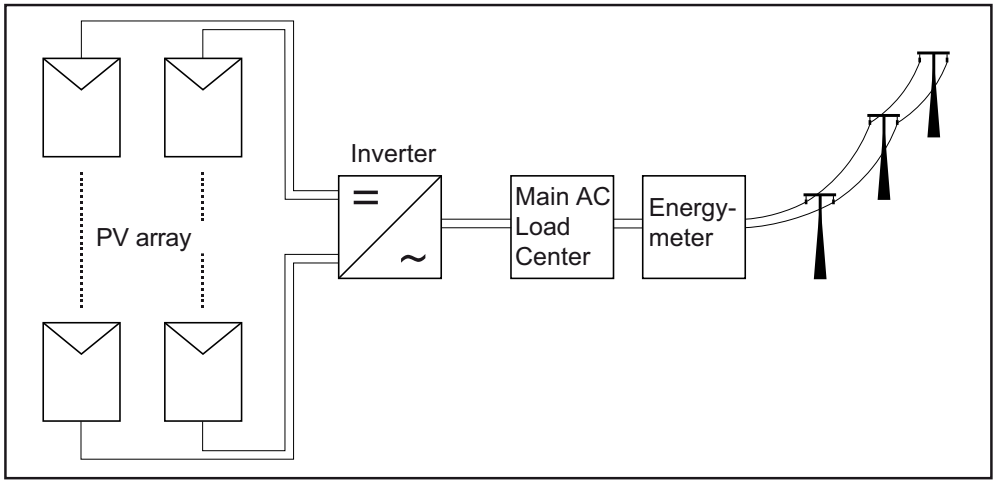

Tasks

The main tasks of the inverter include:

- Converting DC to AC current
- Fully automatic operational management
- Display function and data communication

Converting DC to AC Current

The inverter transforms the direct current generated by the solar modules into alternating current. This alternating current is fed into your home system or into the public grid and synchronized with the voltage that is used there.

IMPORTANT! The inverter has been designed exclusively for use in grid-connected photovoltaic systems. It cannot generate electric power independently of the grid.

Fully Automatic Operational Management

The inverter is fully automatic. Starting at sunrise, as soon as the solar modules generate enough power, the automatic control unit starts monitoring voltage and frequency. As soon as there is a sufficient level of irradiance, your solar inverter starts feeding energy to the grid.

The inverter control system ensures that the maximum possible power output is drawn from the solar modules at all times.
This function is called MPPT (Maximum Power Point Tracking).

As dusk starts and there is no longer sufficient energy available to feed power into the grid, the inverter unit shuts down the grid connection completely and stops operating. All settings and recorded data are saved.

Display function and data communication

The display on the inverter is the interface between the inverter and the operator. The design of the display is geared towards simple operation and making system data available as long as the inverter operates.

The inverter is equipped with a basic logging function to monitor minimum and maximum data on a daily and a cumulative basis. These values are shown on the display.

A wide range of data communication products allows for many possibilities of recording and viewing data.

System upgrade

The inverter is designed for various system upgrades, e.g.:

- Upgrades that enable the inverter to communicate with external system upgrades as well as other inverters
- Datalogger (when using a PC to record and manage data from your photovoltaic system), includes Datalogger and a modem interface

Forced Ventilation

The inverter's temperature-controlled, variable-speed fan with ball-bearing support provides:

- optimal inverter cooling
- efficiency increases
- cooler components, thus improving service life
- least possible energy consumption and lowest possible noise level
- weight reduction due to a reduction of the cooling element surface

Power derating

Should there be insufficient heat dissipation in spite of the fan operating at maximum speed (for example, inadequate heat transfer away from the heat sinks), the power will be derated to protect the inverter when the ambient temperature reaches approx. 40 °C and above.

Derating the power reduces the output of the inverter for a short period sufficient to ensure that the temperature will not exceed the permissible limit. Your inverter will remain ready for operation as long as possible without any interruption.

Installation and Startup

SunPower SPR-f installation and connection

Safety

WARNING! An electric shock can be fatal. Danger from grid voltage and DC voltage from solar modules.

- The connection area should only be opened by a licensed electrician.
- The separate power stage set area should only be disconnected from the connection area after first being disconnected from the grid power.
- The separate power stage set area should only be opened by trained service personnel.

Never work with live wires! Prior to all connection work, make sure that the AC and DC wires are not charged.

WARNING! If the equipment is used or tasks are carried out incorrectly, serious injury or damage may result. Only qualified personnel are authorized to install your inverter and only within the scope of the respective technical regulations. It is essential that you read the "Safety regulations" chapter before commissioning the equipment or carrying out maintenance work.

SunPower SPR-f construction

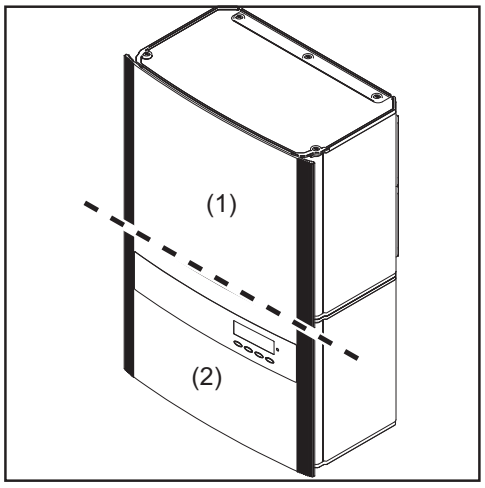

The power stage set and the connection area are separated from each other for delivery.

(1) Power stage set(s)

(2) Connection area

Connection diagram

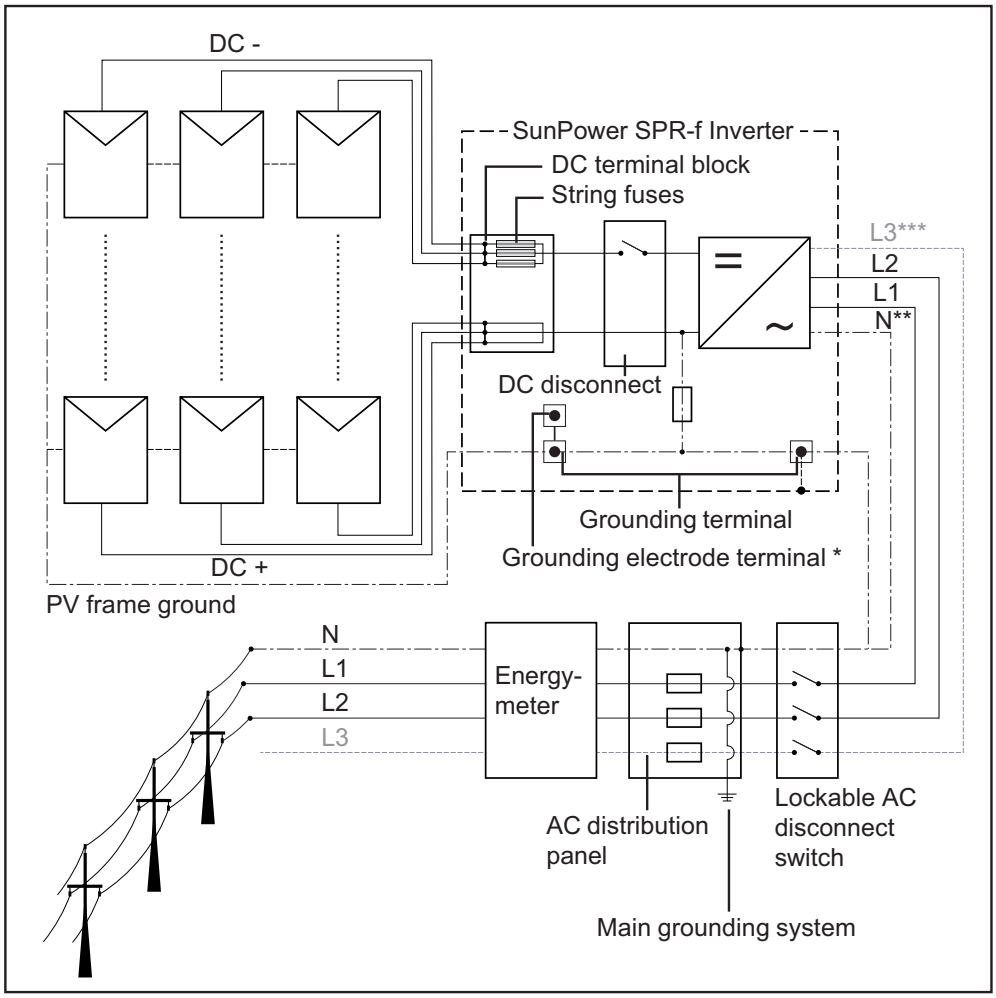

* may be required by local authorities

** may be required depending on grid configuration

*** depending on inverter type

Overview

‘SunPower SPR-f installation and connection’ contains the following sections:

- Choosing the location
- SunPower SPR-f connection options
- Knockouts on the SunPower SPR-f
- SunPower SPR-f installation
- Connecting the SunPower SPR-f to the public grid (AC)
- Connecting solar module strings to the SunPower SPR-f (DC)
- Attaching power stage sets and closing the SunPower SPR-f

Choosing the Location

Choosing the location in general

Please note the following criteria when choosing a location for the inverter:

Only vertical installation
Max. ambient temperatures: -4 °F / +122 °F (-20 °C / +50 °C)
Relative humidity: 0 - 95 %
For use at altitudes above sea level: up to 6561 ft. (2000 m)

- Keep a minimum distance of 8 in. (20 cm) between each inverter or anything to the right or left of the inverters such as walls or DC and AC disconnects.
  For optimal airflow and cooling efficiency in hot climates, the manufacturer recommend a distance of 10 - 12 in. (25 - 30 cm).
- When installing more than one inverter, keep a distance of 12 in. (30 cm) between each inverter.

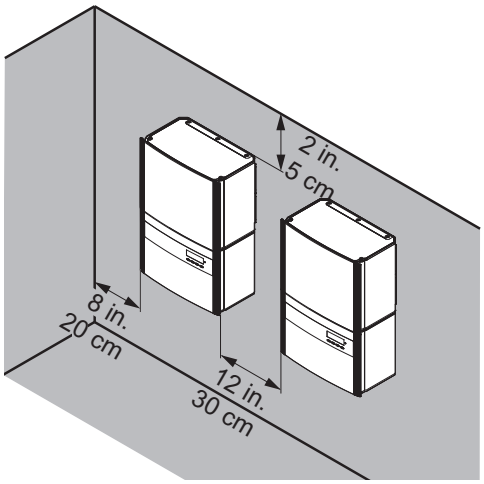

Keep a minimum distance under the inverter corresponding to the ‘NEC 110.26 for code compliant disconnect location.’
The air flow direction within the inverter is from right to left (cold air intake on right, hot air exit on left).
When installing the inverter in a switch panel cabinet (or similar closed environment), it is necessary to make sure that the hot air that develops will be discharged by forced ventilation.
The inverter is designed for installation both indoors and outdoors.

Choosing a Location for Inside Installation

During certain operation phases the inverter may produce a slight noise. For this reason it should not be installed in an occupied living area.

Do not install the inverter in:

- areas with large amounts of dust
- areas with large amounts of conducting dust particles (e.g., iron filings)
- areas with corrosive gases, acids or salts
- areas where there is an increased risk of accidents, e.g., from farm animals (horses, cattle, sheep, pigs, etc.)
- stables or adjoining areas
- storage areas for hay, straw, chaff, animal feed, fertilizers, etc.
- storage or processing areas for fruit, vegetables or winegrowing products
- areas used in the preparation of grain, green fodder or animal feeds
- greenhouses

Choosing a location for outdoor installation

NEMA 3R protection means that the inverter is not susceptible to water spray from any direction.
However, the manufacturer recommends, if possible, that the inverter not be exposed to direct moisture or to a direct water jet (e.g., from sprinklers).

In order to protect the display, the inverter should not be exposed to direct sunlight. Ideally, the inverter should be installed in a protected location, e.g., near the solar modules or under a roof overhang.

Do not install the inverter:

- where it can be exposed to ammonia, corrosive gasses, acids or salts (e.g., fertilizer storage areas, vent openings of livestock stables, chemical plants, tanneries)

SunPower SPR-f connection options

Connection Options

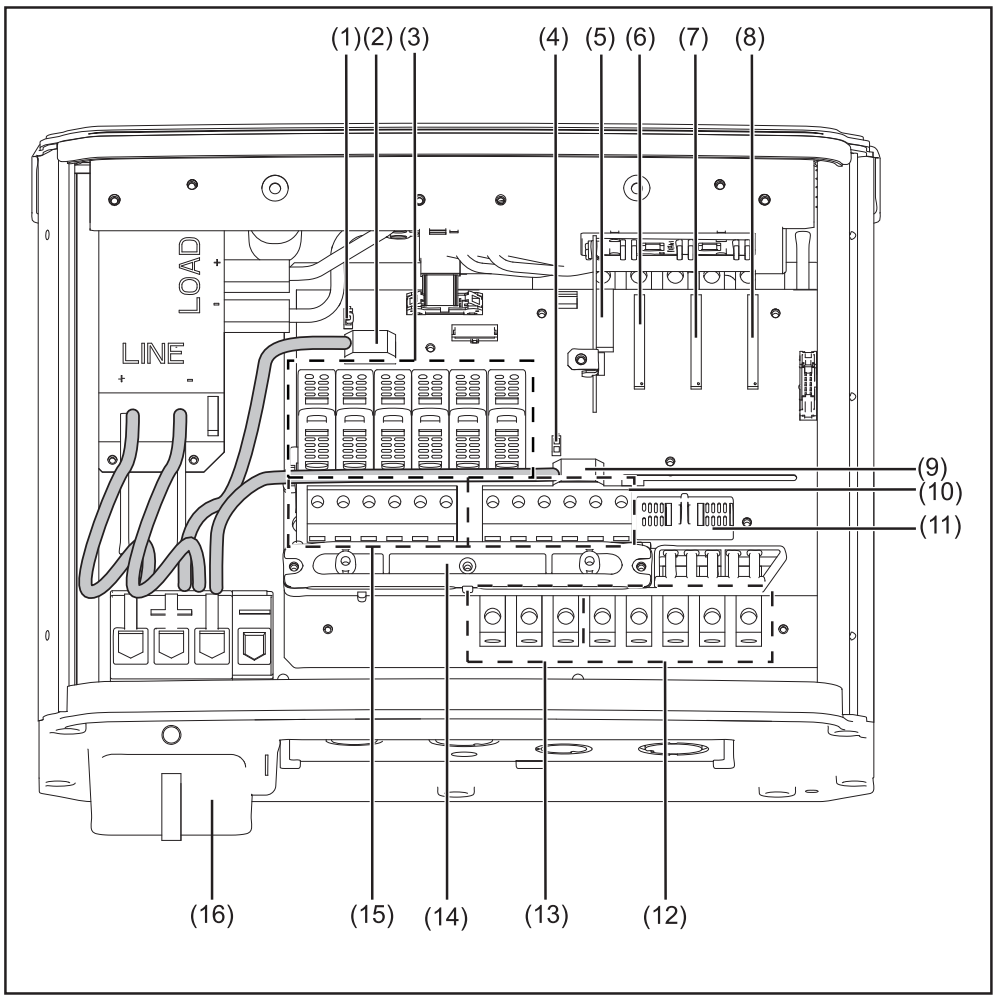

Item	Description
(1)	Jumper slot SMON
(2)	DC- main switch wire
(3)	6 x fuse holder with fuse cover, for stringfuses
(4)	Jumper slot SMOFF
(5)	Plug-in card (IG Brain)
(6)	Open card slot for an option card
(7)	Open card slot for an option card
(8)	Plug-in card NL-MON Only at SunPower SPR-12001f-3-277WYE: Open card slot for an option card
(9)	DC+ main switch wire
(10)	6 DC+ terminals
(11)	Fuse holder with fuse cover, for GFDI-fuse

Item	Description
(12)	AC-side terminals
(13)	3 x grounding terminals
(14)	Strain relief for solar module strings
(15)	6 DC- terminals
(16)	DC main switch

Knockouts on the SunPower SPR-f

General

The inverter contains several knockouts of different sizes. When knocked out, the openings are used for the inputs of various wires.

Knockouts for wire inputs

Knockouts on the left-hand side

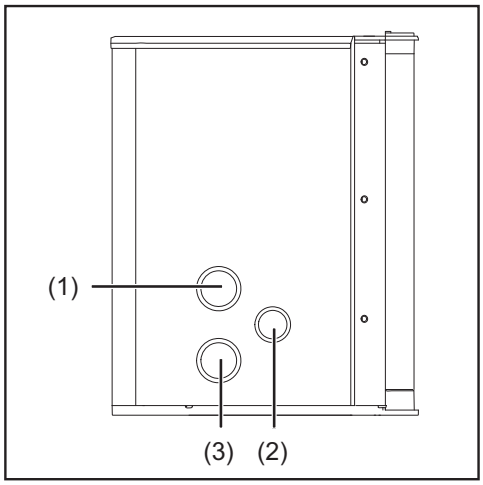

Knockouts on the right-hand side

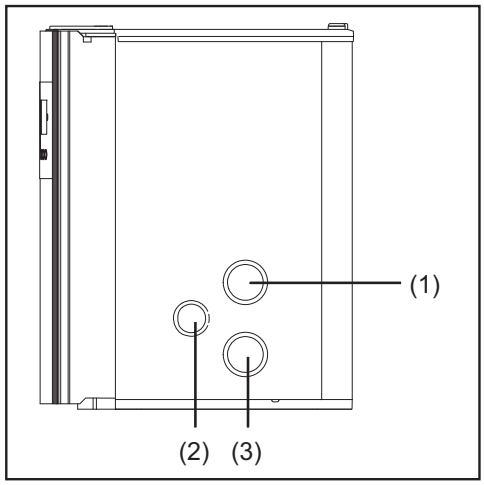

Knockouts on the underside and on the backside

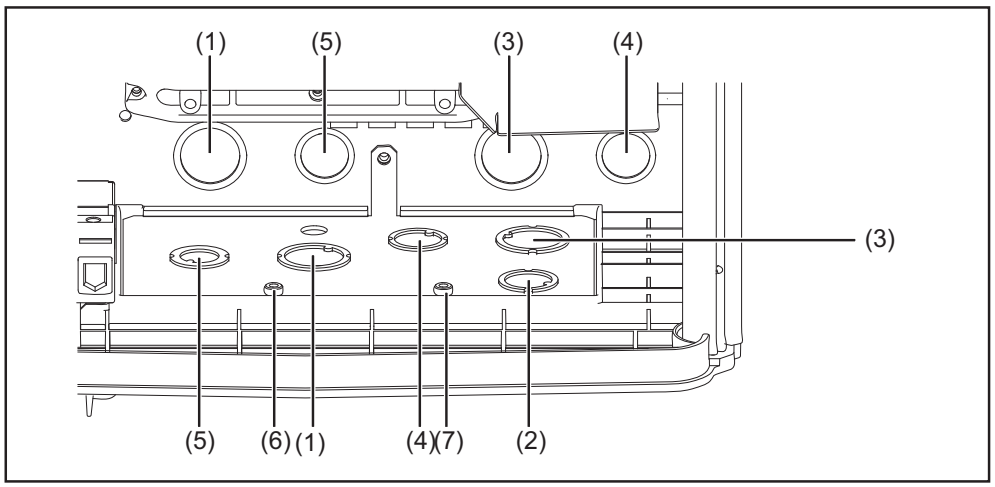

Item	Description
(1)	Knockout, diameter 3/4 in. / 1 in. e.g., for DC wire, surge arrester
(2)	Knockout, diameter 1/2 in. / 3/4 in. only for data wires
(3)	Knockout, diameter 3/4 in. / 1 in. e.g., for AC wire, surge arrester

Item	Description
(4)	Knockout, diameter 1/2 in. / 3/4 in. e.g., for AC wire, surge arrester
(5)	Knockout, diameter 1/2 in. / 3/4 in. e.g., for DC wire, surge arrester
(6)	FTX 25 fixing screw
(7)	FTX 25 fixing screw

NOTE! When using back wire inputs:

- seal enclosure as per NEMA 3R before outside operationn

NOTE!

- The larger knockouts should only be removed from the outside in.
- The smaller knockouts should be removed from the inside out.
- Only remove the number of knockouts required for the available wire inputs.

CAUTION! Danger of damaging the plastic base when removing the knockouts on the bottom.

- Before removing, remove the 3 fixing screws (6) and (7)
- Remove the metal insert from the plastic base
- Remove the required knockouts
- Replace the metal insert into the plastic base
- Secure the metal insert using the 3 fixing screws (6) and (7)

SunPower SPR-f installation

General

IMPORTANT! Depending on the surface, different dowels and screws may be required for installing the wall bracket. These dowels and screws are not part of the scope of delivery for the inverter. The installer is responsible for selecting the proper dowels and screws.

NOTE! The inverter is designed only for a vertical installation position.

Assembling the wall bracket

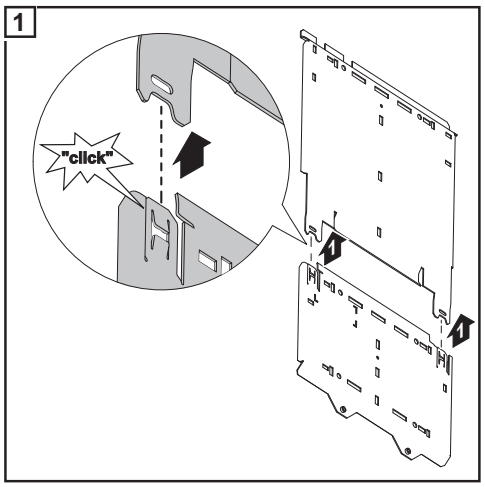

Recommended screws for wall bracket assembly

In most cases, you should use 1/4 in. or 5/16 in. stainless steel or aluminum screws capable of supporting 55 lbs. (SunPower SPR-3301f / SPR-3801f), 81 lbs. (SunPower SPR-6501f / SPR-7501f), or 110 lbs. (SunPower SPR-10001f / SPR-11401f / SPR-12001f) of inverter weight.

Attaching the wall bracket - mounting height

IMPORTANT! Keep a minimum distance under the inverter corresponding to the ‘NEC 110.26 for code compliant disconnect location'. If the DC disconnect is to be code compliant, it must be readily accessible (NEC 690.14 (B) (1)).
The DC disconnect is in the lower left part of the inverter. Also, the cut out segment marked (*) in the following drawings represents the placement of the inverter display. Use this to ensure a comfortable display height for easy reading.

Attaching the wall bracket to a concrete or brick wall

IMPORTANT! The cut out segment marked (*) represents the placement of the inverter display. Use this to ensure a comfortable display height for easy reading.

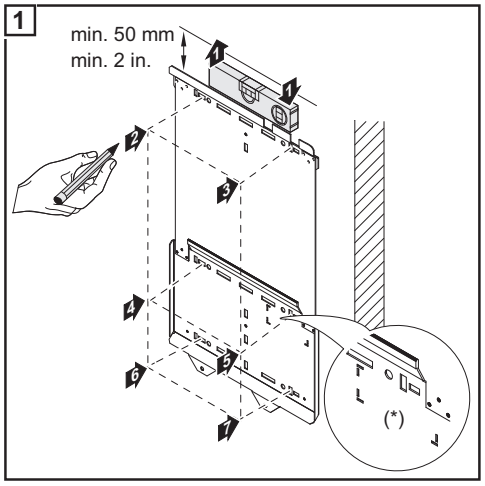

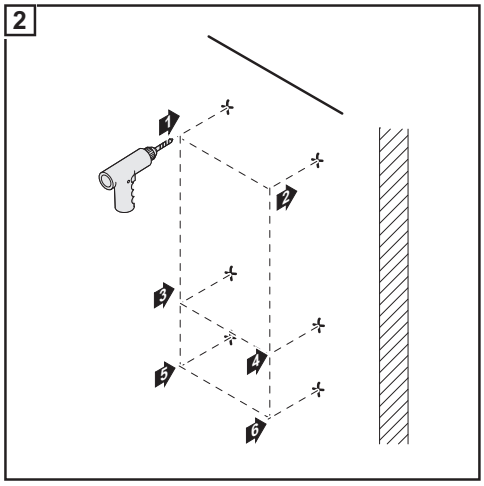

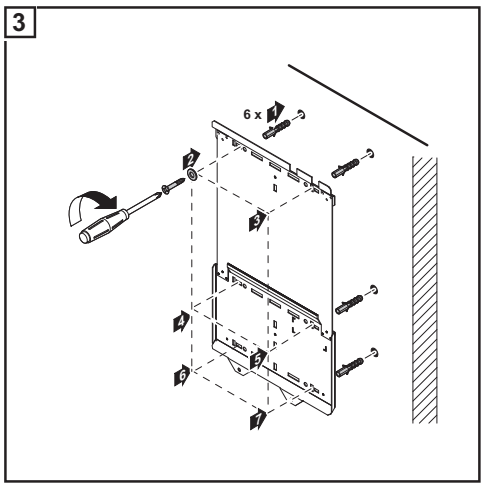

Attaching the wall bracket to a wooden wall

IMPORTANT! The cut out segment marked (*) represents the placement of the inverter display. Use this to ensure a comfortable display height for easy reading.

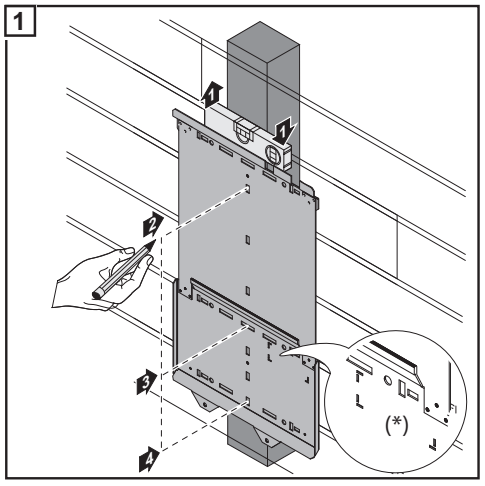

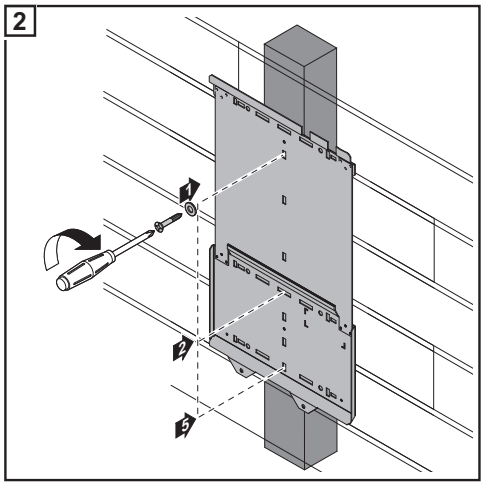

Attaching the wall bracket to a metal carrier

IMPORTANT! The cut out segment marked (*) represents the placement of the inverter display. Use this to ensure a comfortable display height for easy reading.

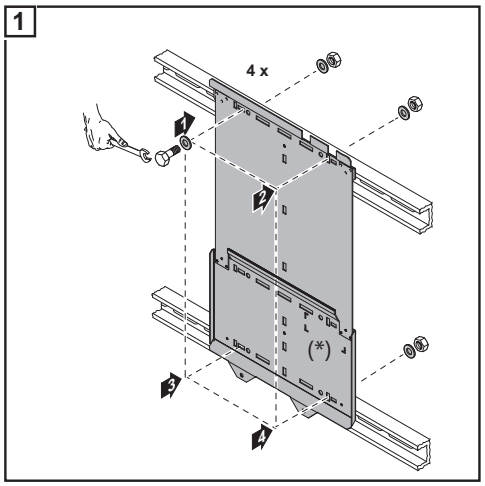

NOTE! When installing using a metal carrier, the inverter should not be exposed to rainwater or water spray at the back. Ensure proper rainwater or spray water protection.

Lifting the Inverter

SunPower Corporation recommends using a commercially-available vacuum lifting pad for flat surfaces to lift the connection area and power stage set.

IMPORTANT!

- The vacuum lifting pads must be designed for the weight of the connection area and power stage set.
- Follow all safety instructions from the vacuum lifting pad manufacturer.
- Vacuum lifting pads are not part of the scope of delivery for the inverter.

Weight information for the connection area and power stage set:

Inverter	Connection area	Power stage set
SunPower SPR-3301f-1	24 lbs.	31 lbs.
SunPower SPR-3801f-1	24 lbs.	31 lbs.
SunPower SPR-6501f-1	24 lbs.	57 lbs.
SunPower SPR-7501f-1	24 lbs.	57 lbs.
SunPower SPR-10001f-1	26 lbs.	84 lbs.
SunPower SPR-11401f-1	26 lbs.	84 lbs.
SunPower SPR-11401f-3	26 lbs.	84 lbs.
SunPower SPR-12001F-3	26 lbs.	84 lbs.

Installing the inverter

NOTE! For inverter assembly, please ensure that:

- the wall bracket is fixed securely to the wall
- the connector is hung and fixed to the wall bracket
- the power stage set is hung on the wall bracket and fixed to the connector

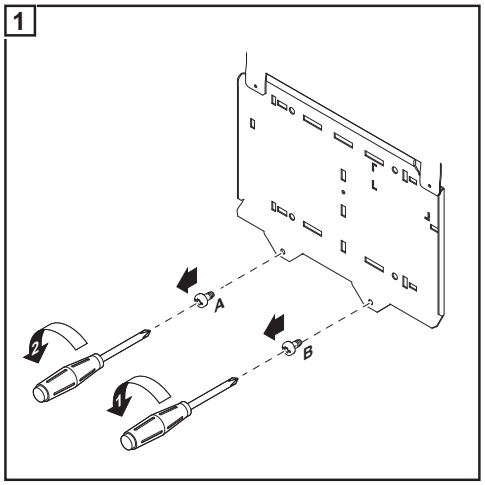

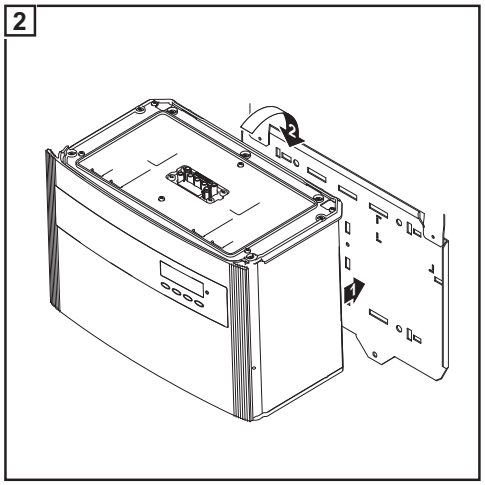

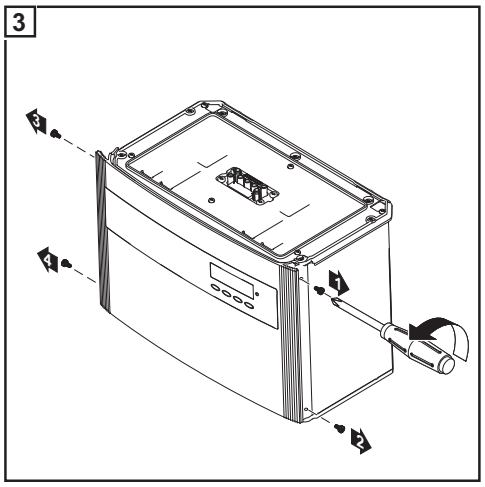

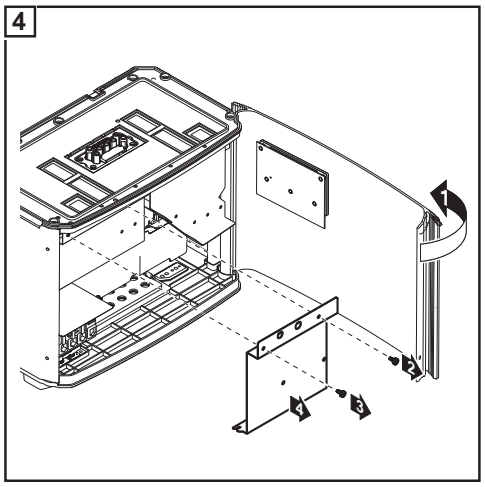

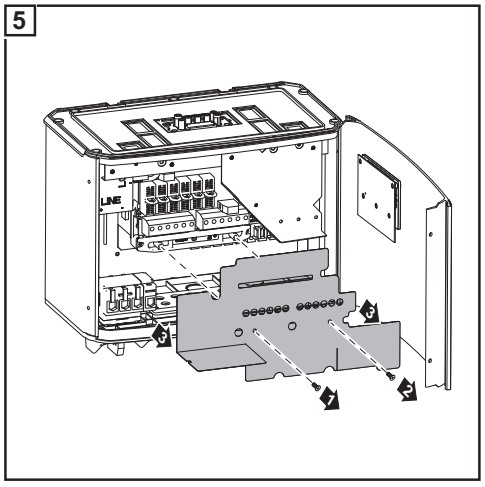

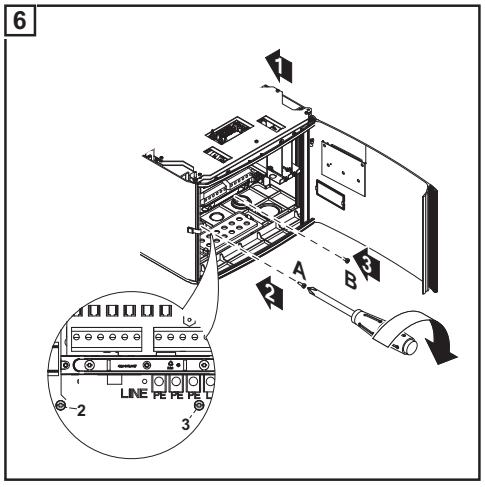

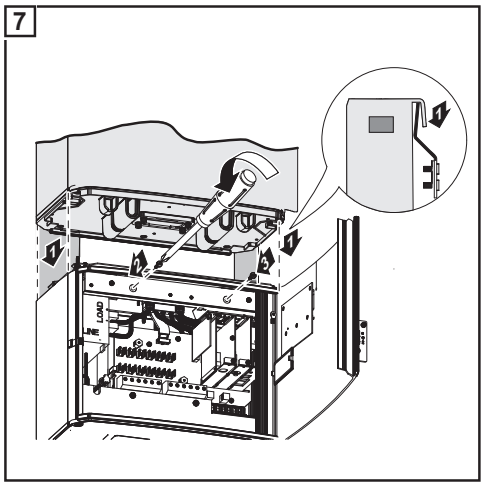

For mounting the power stage set to the connection area use the screws from the plastic bag affixed to the wall bracket.

Installation of several inverters

Several inverters can be easily installed and connected next to each other using the side knockouts on the inverter, e.g.:

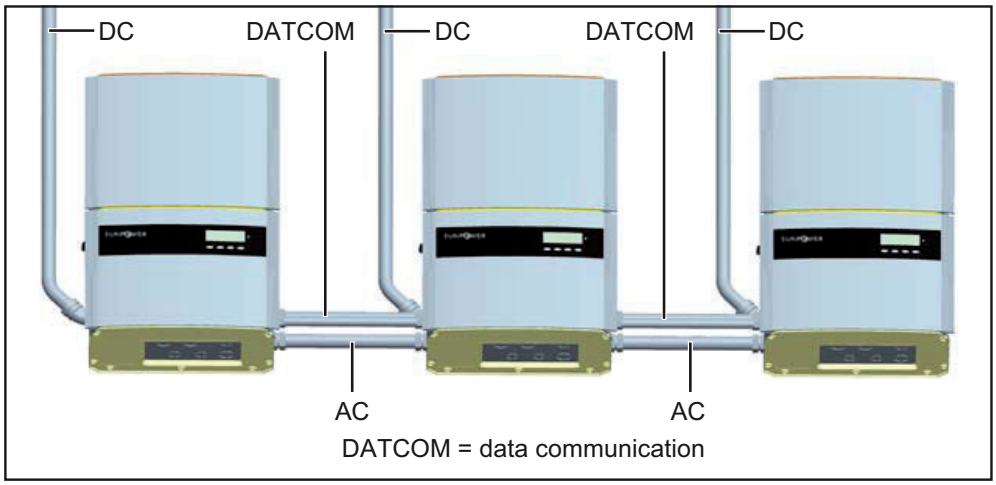

NOTE! All electrical installations must be carried out in accordance with the National Electrical Code, ANSI/NFPA 70, and any other codes and regulations applicable to the installation site.

For installations in Canada, the installations must be done in accordance with applicable Canadian standards.

Connecting the SunPower SPR-f to the public grid (AC)

Overview of available grids

Inverters can be connected to the following grids:

Grid	Inverter
208 V Delta 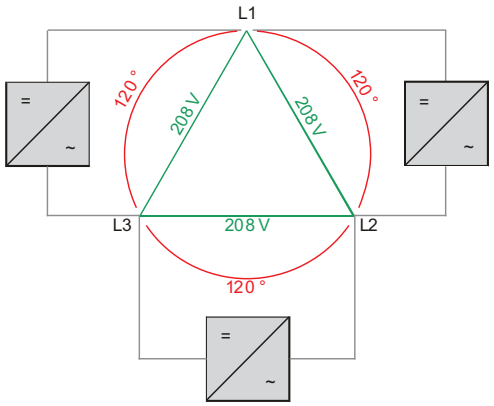	SunPower SPR-3301f SunPower SPR-3801f SunPower SPR-6501f SunPower SPR-7501f SunPower SPR-10001f SunPower SPR-11401f-1 SunPower SPR-11401f-3-208/240
208 V Delta: 120 V WYE 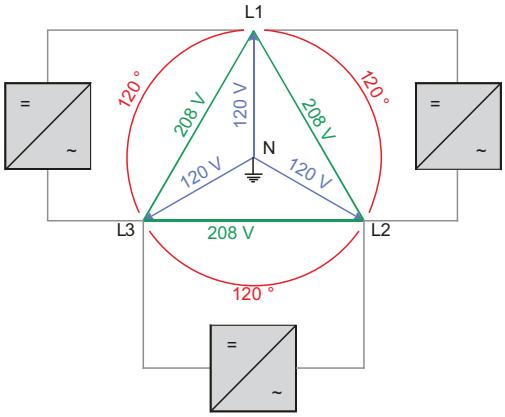	SunPower SPR-3301f SunPower SPR-3801f SunPower SPR-6501f SunPower SPR-7501f SunPower SPR-10001f SunPower SPR-11401f-1 SunPower SPR-11401f-3-208/240

Grid	Inverter
240 V Delta 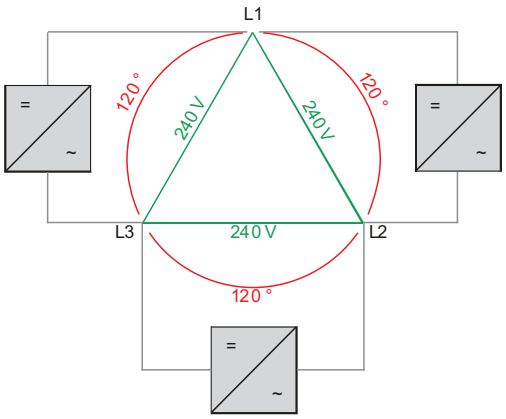	SunPower SPR-3301f SunPower SPR-3801f SunPower SPR-6501f SunPower SPR-7501f SunPower SPR-10001f SunPower SPR-11401f-1 SunPower SPR-11401f-3-208/240
240 V: 120 V Stinger 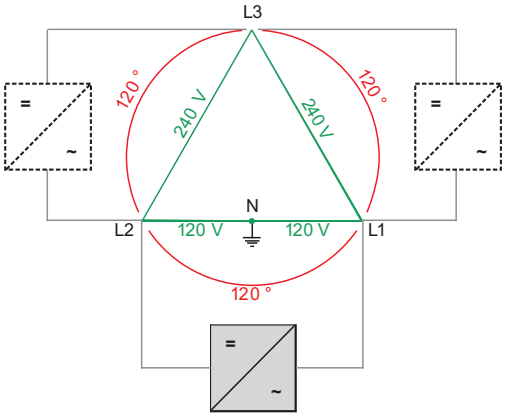	SunPower SPR-3301f SunPower SPR-3801f SunPower SPR-6501f SunPower SPR-7501f SunPower SPR-10001f SunPower SPR-11401f-1
240 V: 120 V Split phase 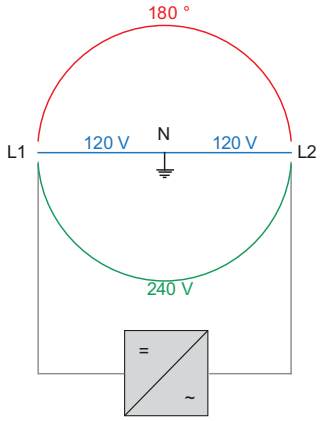	SunPower SPR-3301f SunPower SPR-3801f SunPower SPR-6501f SunPower SPR-7501f SunPower SPR-10001f SunPower SPR-11401f-1

Grid	Inverter
480 V Delta: 277 V WYE 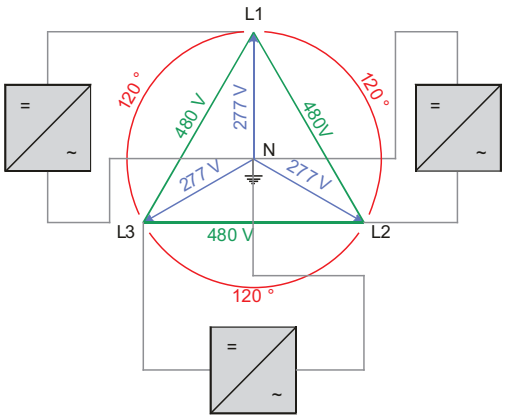	SunPower SPR-3301f SunPower SPR-3801f SunPower SPR-6501f SunPower SPR-7501f SunPower SPR-10001f SunPower SPR-11401f-1 SunPower SPR-12001f-3-277WYE
480 V Delta 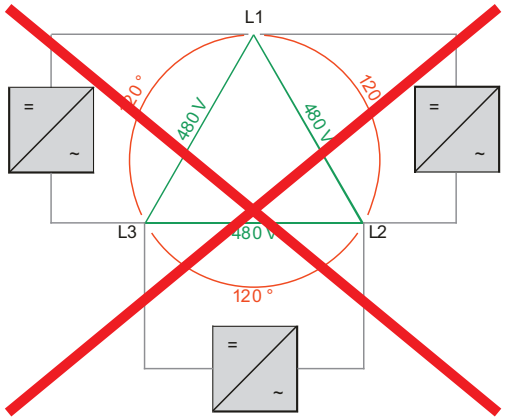	**NOTE!** Do not connect SunPower SPR-f inverters to the 480 V Delta grid.

Monitoring the Grid

IMPORTANT! The resistance in the leads to the AC-side connection terminals must be as low as possible for optimal functioning of grid monitoring.

Systems with more than one inverter

For larger photovoltaic systems, it is possible to connect several inverters in parallel without any problems. To ensure symmetrical feeding, connect the inverters uniformly to all 3 phases.

NOTE! The inverter is designed to be connected to three-phase systems. Utilities generally allow up to 6 kVA of unbalance, but check with your utility and try to balance the installation.

Connect the SunPower SPR-f to the grid as follows:

208 V / 240 V:
- SunPower SPR-f No. 1, No. 4, No. 7, ... to L1 and L2
- SunPower SPR-f No. 2, No. 5, No. 8, ... to L2 and L3
- SunPower SPR-f No. 3, No. 6, No. 9, ... to L1 and L3

277 V:
- SunPower SPR-f No. 1, No. 4, No. 7, ... to L1 and N
- SunPower SPR-f No. 2, No. 5, No. 8, ... to L2 and N
- SunPower SPR-f No. 3, No. 6, No. 9, ... to L3 and N

AC-side terminals and grounding terminals

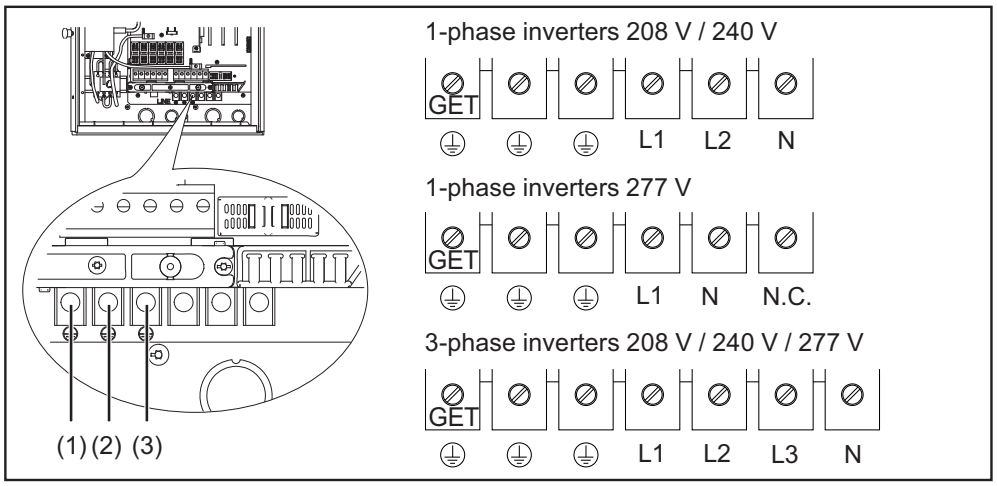

The terminals are designed for the following terminal connections:

Grounding terminals:

(1)	Grounding Electrode Terminal (GET) A grounding electrode terminal may be required depending on local regulations.
(2)	Grounding of photovoltaic components (e.g., solar module frames) The ground for photovoltaic components such as solar module frames must be connected at the grounding terminals. The size of the wire usually corresponds to the largest wire in the DC system.

(3)	Grid grounding / Grounding conductor The inverter must be connected via the grounding terminal to the AC grid grounding.

NOTE!

- Use copper wires for all grounding cables
- Use only solid or stranded wire. Do not use fine stranded wire.
- See NEC section 250 for correct grounding.

AC-side terminals:

L1	= Phase conductor L1
L2	= Phase conductor L2
L3	= Phase conductor L3
N	= Neutral conductor N

NOTE! The neutral conductor is not bonded to ground internally.

NC	= Not connected

Max. wire cross section AWG 4

Cross section of AC wires

WARNING! An electric shock can be fatal. Inadequately sized electrical components can cause serious injuries to persons and damage to (or loss of) property.

- All electrical installations must be carried out in accordance with the National Electrical Code, ANSI/NFPA 70, and any other codes and regulations applicable to the installation site.
- For installations in Canada, the installations must be done in accordance with applicable Canadian standards.
- Use minimum AWG 14 to maximum AWG 4, min. 167°F (75°C), copper wire for all AC wiring connections to the inverter. Voltage drop and other considerations may dictate larger size wires be used.
- Use only solid or stranded wire. Do not use fine stranded wire.

Minimum cross section of AC wires (for an ambient temperature of 122 °F / 50 °C):

SunPower SPR-f	AC wire 208 V	AC wire 240 V	AC wire 277 V
SPR-3301f	AWG 12	AWG 12	AWG 14
SPR-3801f	AWG 12	AWG 12	AWG 12

SunPower SPR-f	AC wire 208 V	AC wire 240 V	AC wire 277 V
SPR-6501f	AWG 10	AWG 10	AWG 12
SPR-7501f	AWG 8	AWG 8	AWG 10
SPR-10001f	AWG 6	AWG 6	AWG 8
SPR-11401f-1	AWG 4	AWG 4	AWG 4
SPR-11400f-3-208/240	AWG 8	AWG 8	-
SPR-12000f-3-277	-	-	AWG 12

Safety

Only an authorized electrician is permitted to connect this inverter to the public grid.

WARNING! An electric shock can be fatal. Danger from grid voltage and DC voltage from solar modules.

- The connection area should only be opened by a licensed electrician.
- The separate power stage set area should only be disconnected from the connection area after first being disconnected from the grid power.

Never work with live wires! Prior to all connection work, make sure that the AC and DC wires are not charged.

CAUTION! Danger of damaging the inverter due to an overload of the grid neutral conductor.

- Do not connect 2-phase and 3-phase devices to one phase
- Never operate multiphase devices in one phase

CAUTION! Danger of damaging the inverter from improperly connected terminals. Improperly connected terminals can cause thermal damage to the inverter and may cause a fire. When connecting the AC and DC cables, make sure that all terminals are tightened securely using the proper torque.

Connecting the SunPower SPR-f to the public grid (AC)

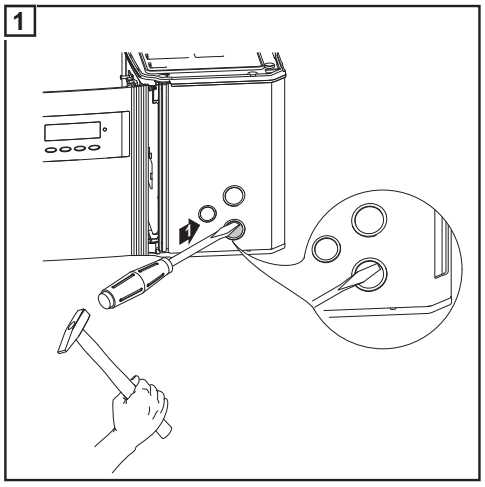

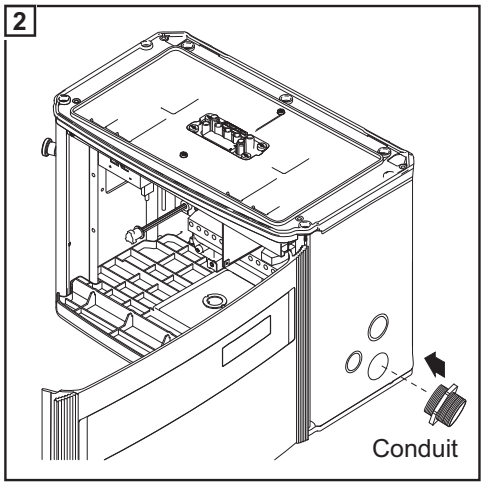

NOTE! Use only water tight conduit fittings and conduits. Conduit fittings and conduits are not part of the scope of supply for the inverter.

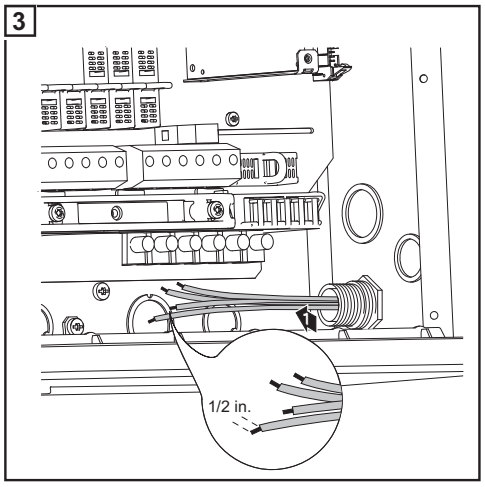

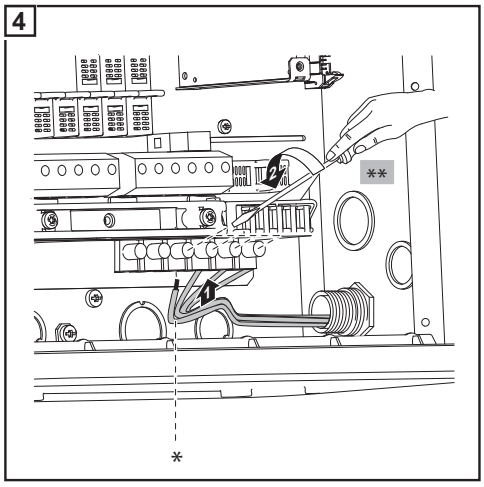

* Connect grid grounding / grounding conductor to the right grounding terminal

** Tightening torque:
Stranded wires 1.25 ft. lb.
Solid wires 0.81 ft. lb.

Connect the AC wires to the AC-side terminals depending on the grid and phase quantity of the inverter:

1 phase - 208 V / 240 V

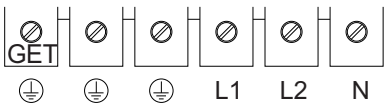

1 phase - 277 V

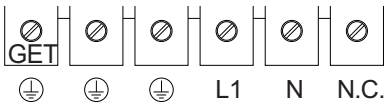

3 phases - 208 V / 240 V / 277 V

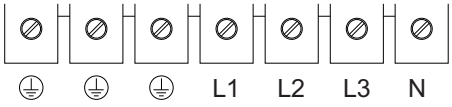

GET:
Grounding Electrode Terminal

N.C.:
Not connected

NOTE! Form a min. 4 in. wire loop using all wires.

Connecting grounding electrode wire

If the photovoltaic system requires a grounding electrode, it should be connected as follows:

1

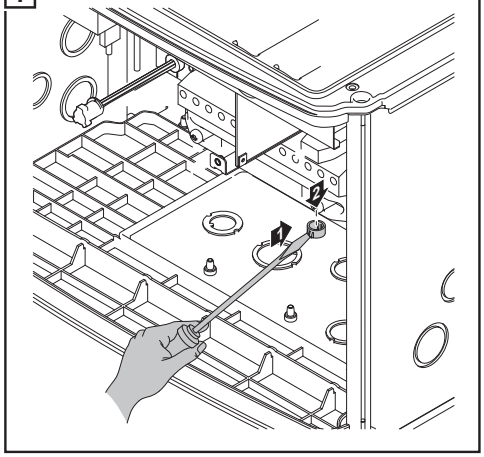

2

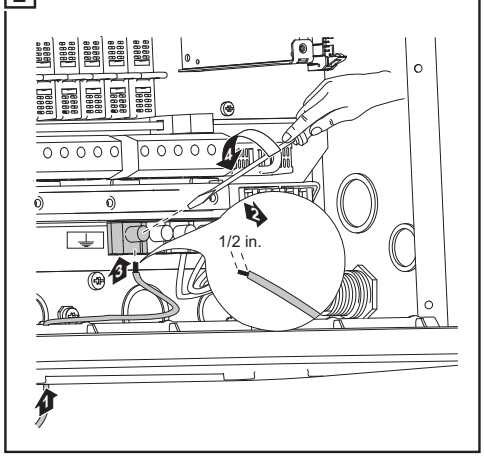

Tightening torque:
Stranded wires 1.25 ft. lb.
Solid wires 0.81 ft. lb.

NOTE! Form a min. 4 in. wire loop using all wires.

Recommendation for the AC-side overcurrent protection

NOTE! To reduce the risk of fire, connect only to a circuit provided with branch circuit overcurrent protection in accordance with the National Electrical Code, ANSI / NFPA 70, at a MAXIMUM of:

SunPower SPR-f	Overcurrent protection		
	208 V	240 V	277 V
SPR-3301f	20 A	20 A	15 A
SPR-3801f	25 A	25 A	20 A
SPR-6501f	40 A	35 A	30 A
SPR-7501f	45 A	45 A	40 A
SPR-10001f	60 A	60 A	45 A

SunPower SPR-f	Overcurrent protection		
	208 V	240 V	277 V
SPR-11401f-1	70 A	60 A	60 A
SPR-11400f-3-208/240	40 A	35 A	-
SPR-12000f-3-277	-	-	20 A

Additional external AC and/or DC disconnect

Depending on the installation, an additional external AC and/or DC disconnect may be required if the inverter is installed in a location not easily accessible to utility or fire personnel. Contact your local authorities for additional information.

Connecting solar module strings to the SunPower SPR-f (DC)

General information about solar modules

In order to select suitable solar modules and get the most efficient use out of the inverter, please note the following points:

- The open circuit voltage of the solar modules increases as the temperature decreases (assuming constant irradiance). The open circuit voltage should never rise above 600 V at a temperature of 14 °F (-10 °C) and an irradiance of 1000 W/m².

  If the open circuit voltage exceeds 600 volts, the inverter may be damaged, and all warranty rights will become null and void.
- More exact data for sizing the solar array for the particular location can be obtained using suitable calculations tools.

Safety

WARNING! An electric shock can be fatal. Danger from grid voltage and DC voltage from solar modules.

- The connection area should only be opened by a licensed electrician.
- The separate power stage set area should only be disconnected from the connection area after first being disconnected from the grid power.
- The separate power stage set area should only be opened by trained service personnel.

Never work with live wires! Prior to all connection work, make sure that the AC and DC wires are not charged.

The DC main switch is only used to switch off power to the power stage set. When the DC main switch is turned off, the connection area is still energized.

CAUTION! Danger of damaging the inverter due to improperly connected terminals. Improperly connected terminals can cause thermal damage to the inverter and may cause a fire. When connecting the AC and DC cables, make sure that all terminals are tightened securely using the proper torque.

DC terminals

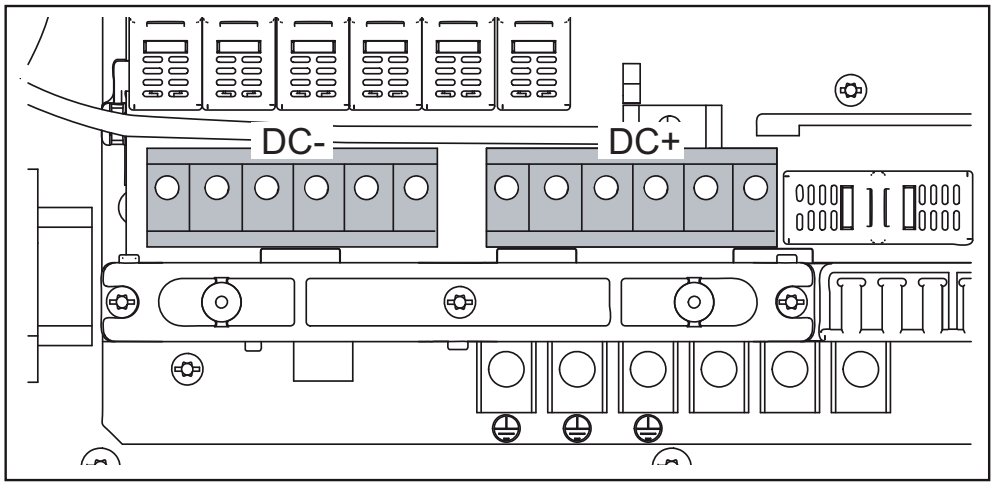

Polarity reversal of solar module strings

The SunPower SPR-f comes standard with string fuses. The reverse polarity of an individual solar module string can cause damage to the inverter and cause an inverter fire.

CAUTION! Risk of damage and fire to inverter due to reverse polarity of solar module strings when using string fuses.

Reverse polarity of solar module strings can lead to an unacceptable overload to a string fuse being used. This can cause a strong arc, which can lead to an inverter fire.

When using string fuses, always make sure that the polarity is correct before connecting the individual solar module strings.

Overview

'Connecting solar module strings to the SunPower SPR-f (DC)' includes the following sections:

- Solar module ground at positive pole: Connecting solar module strings
- Criteria for the proper selection of string fuses
- Solar module ground at negative pole: Connecting solar module strings
- Criteria for the proper selection of string fuses

Solar Module Ground at Positive Pole: Connecting Solar Module Strings

Solar Module Ground at Positive Pole

The inverter is designed for a solar module ground at the positive pole. The solar module ground in the inverter is carried out via a fuse.

Solar module ground at positive pole with fuse:

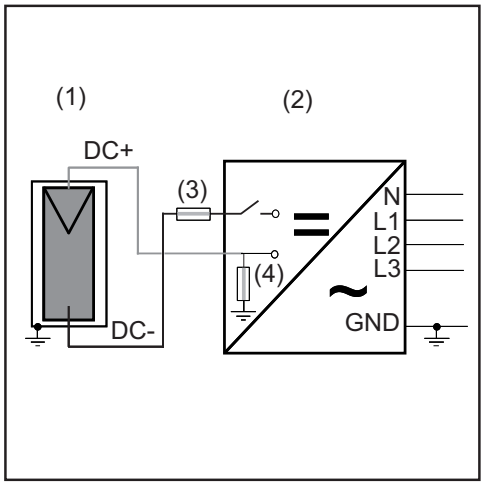

(1) Solar module
(2) Inverter
(3) String fuse
(4) Fuse for the solar module ground

N Neutral conductor
L1 Phase conductor L1
L2 Phase conductor L2
L3 Phase conductor L3
GND Ground

WARNING! An electric shock can be fatal. Normally grounded conductors may be ungrounded and energized when a ground fault is indicated. The ground fault has to be repaired before operation is resumed.

NOTE! Do not connect the ground to the positive DC line at any point! This is already done within the inverter. If positive DC lines are connected to the DC terminals or prior to this to the ground, this will circumvent the GFDI protection system, preventing your inverter from properly detecting a fault current.

In addition, turning the DC disconnect to the OFF/open circuit condition will not disconnect the array from ground, as it only disconnects the DC negative.

The SunPower Corporation recommends a fuse with 1 A and dimensions of 0.39 x 1.50 in (10 x 38 mm) for the solar module ground.
The inverter comes supplied with a corresponding fuse in the fuse holder for the solar module ground.

IMPORTANT! The following steps are necessary only if a solar module ground at the positive pole is required to protect the solar modules.

Wire cross section of solar module strings

WARNING! An electric shock can be fatal. Inadequately sized electrical components can cause serious injuries to persons and damage to (or loss of) property.

- All electrical installations must be carried out in accordance with the National Electrical Code, ANSI/NFPA 70, and any other codes and regulations applicable to the installation site.
- For installations in Canada, the installations must be done in accordance with applicable Canadian standards.
- Use minimum AWG 14, min. 167 °F (75 °C), copper wire for all grounding wires (see NEC table 250.122).
- Use minimum AWG 14 to maximum AWG 6, min. 167°F (75°C), copper wire for all DC wiring connections to the inverter. Voltage drop and other considerations may dictate larger size wires be used.
- Use only solid or stranded wire. Do not use fine stranded wire.

NOTE! To ensure an effective strain relief device for solar module strings, only use cable cross sections of the same size.

Solar Module Ground at Positive Pole: Connecting Solar Module Strings

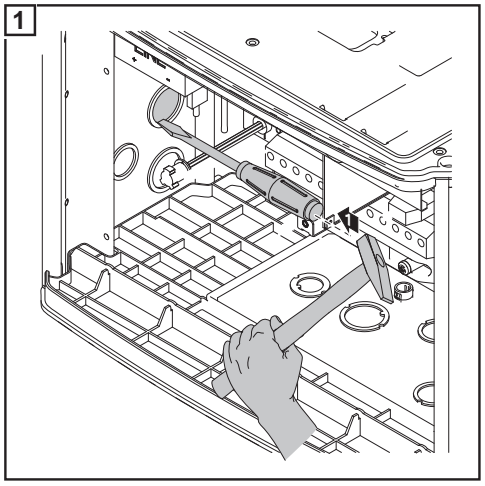

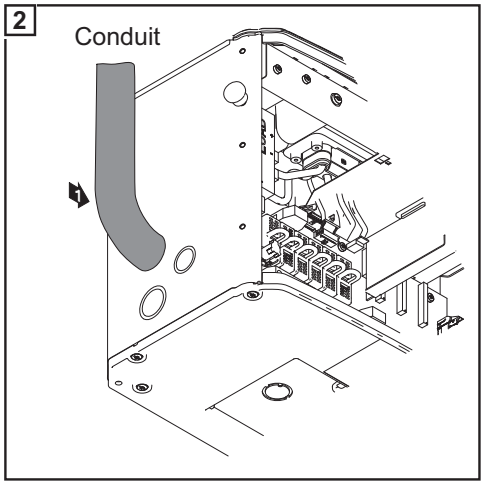

NOTE! Use only water tight conduit fittings and conduits. Conduit fittings and conduits are not part of the scope of supply for the inverter.

3

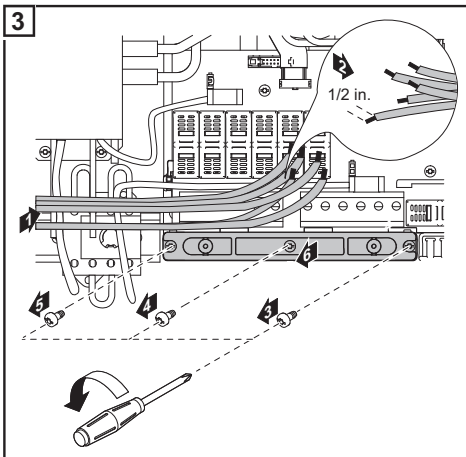

4

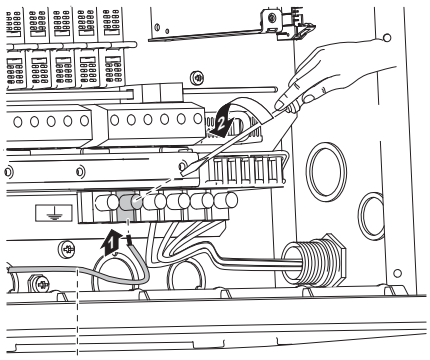

* Wire for solar module grounding

Tightening torque::
Stranded wires 1.25 ft. lb.
Solid wires 0.81 ft. lb.

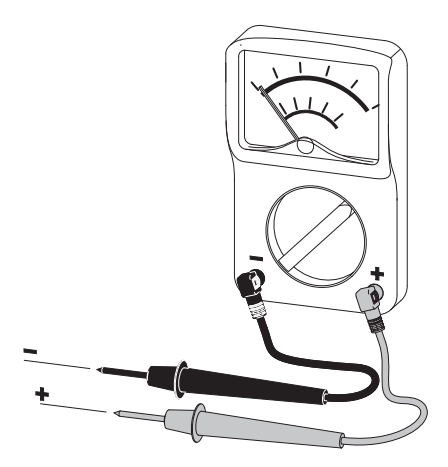

NOTE! Connecting the DC wiring with the wrong polarity may cause damage to the inverter. Check both the polarity and the open circuit voltage!

The DC Voltage must not exceed 600 V, regardless of temperature.

CAUTION! Danger of damaging the inverter by overload.

- Only connect a maximum of 20 A to an individual DC terminal.
- Connect the DC+ and DC- cables to the correct DC+ and DC- terminals on the inverter.

5

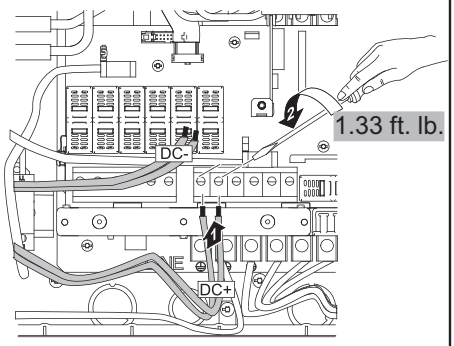

Tightening torque for solid and stranded wires

6

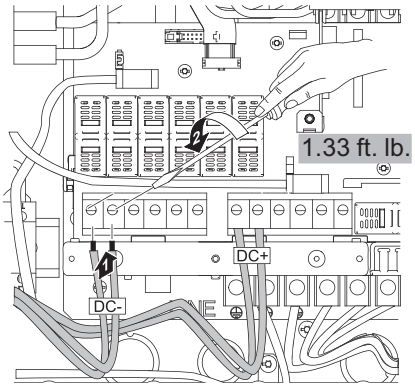

Tightening torque for solid and stranded wires

NOTE! Form a min. 4 in. wire loop using all wires.

7

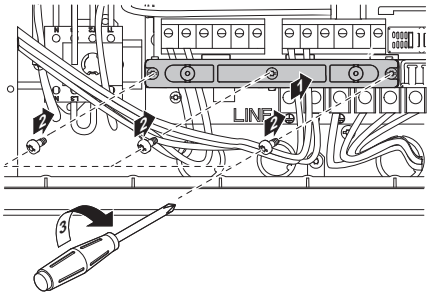

8

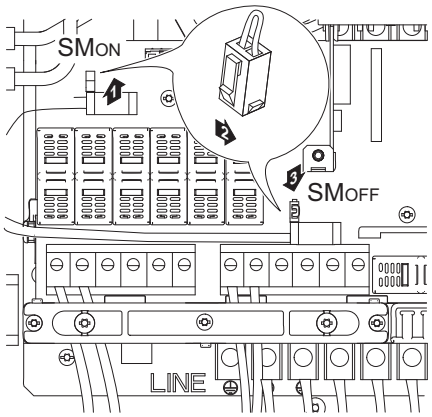

IMPORTANT!

- Set the jumper from the 'SM_{ON}' position to the 'SM_{OFF}' position for correct measurement results
- Check the polarity and voltage of the solar module strings: the voltage should be a max. of 600 V, the difference between the individual solar module strings should be a max. of 10 V.

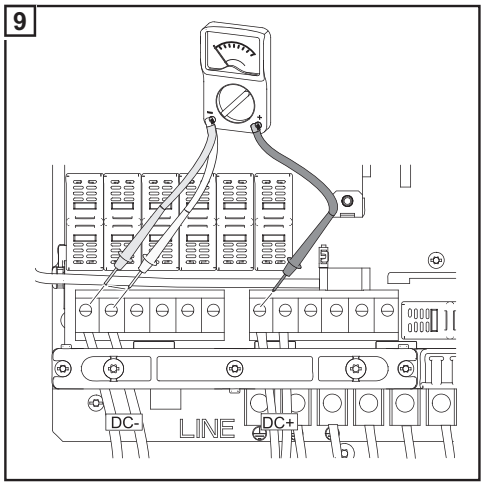

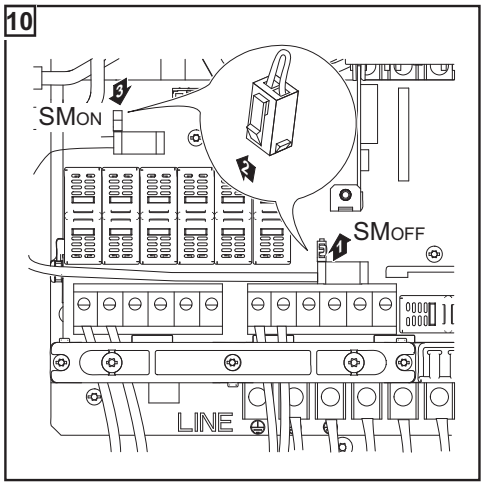

IMPORTANT! The inverter comes standard with 6 string fuses in the fuse holders.

- Insert string fuses only with fuse covers into the fuse holders.
- Do not operate the inverter without fuse covers.
- Follow all solar module safety instructions.

WARNING! An electric shock can be fatal. Danger from DC voltage from solar modules. Fuse covers are for installation purposes only. They offer no protection against contact.

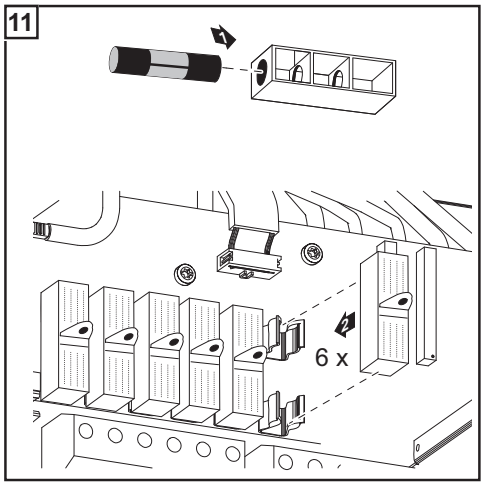

For more information on the string fuses, see the section ‘Criteria for the proper selection of string fuses.’

Criteria for the Proper Selection of String Fuses

DC disconnect requirements

NEC 690.15-18 allows the use of fuse holders as a suitable means of disconnecting PV arrays for servicing.
Additional DC disconnects external to the inverter may be required by the local authority having jurisdiction.

General

The use of string fuses in the inverter also adds fuse protection to the solar modules.
A crucial factor for the fuse protection of solar modules is the maximum short circuit current I_{sc} of the respective solar module.

Criteria for the proper selection of string fuses

The following criteria must be fulfilled for each solar module string when using fuse protection:

- $I_N > 1.56 \times I_{SC}$
- $I_N < 2.00 \times I_{SC}$
- $V_N >/= 600$ V DC
- Fuse dimensions: Diameter 0.41 x 1.38 - 1.50 in. (10.3 x 35 -38 mm)

I_N Nominal current rating of fuse

I_{SC} Short circuit current for standard test conditions (STC) according to solar module data sheet

V_N Nominal voltage rating of fuse

NOTE! The string fuse size must not be greater than the maximum fuse size rating of the PV module as provided on the PV module manufacturers data sheet. If no maximum fuse size is indicated, please contact the PV module manufacturer.

Effects of Using Underrated Fuses

In underrated fuses, the nominal current value is less than the short circuit current of the solar module.
Effect:
The fuse may trip in intensive lighting conditions.

Fuse recommendations

NOTE! Only select fuses suitable for a voltage of 600 V DC.

You should only use the following fuses, which have been tested by manufacturer, to ensure problem-free fuse protection:

- Littelfuse KLKD fuses
- Cooper Bussmann PV fuses

The manufacturer shall not be liable for any damage or other incidents resulting from the use of other fuses. In addition, all warranty claims are forfeited.

Application example

Example: Maximum short circuit current (I_{SC}) of the solar module = 5.75 A

According to the criteria for selecting the correct fuse, the fuse must have a nominal current greater than 1.56 times the short circuit current:
5.75 A x 1.56 = 8.97 A

The fuse that should be selected according to the ‘Fuses’ table:
KLK D 9 with 9.0 A and 600 V AC / DC

Solar Module Ground at Negative Pole: Connecting Solar Module Strings

Solar Module Ground at Negative Pole

The inverter is designed for a solar module ground at the positive pole, but it can also be converted for a ground at the negative pole.
The solar module ground in the inverter is carried out via a fuse.

Solar module ground at negative pole via fuse:

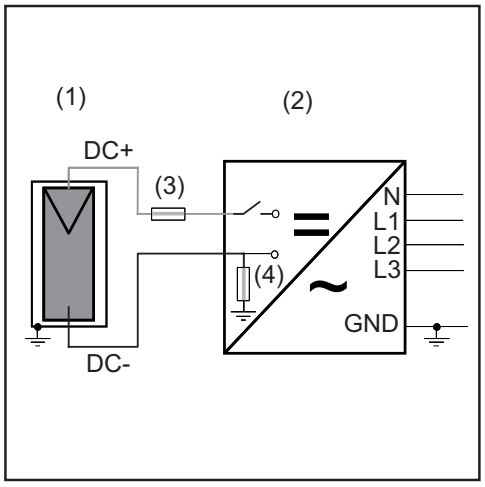

(1) Solar module
(2) Inverter
(3) String fuse
(4) Fuse for the solar module ground

N Neutral conductor
L1 Phase conductor L1
L2 Phase conductor L2
L3 Phase conductor L3
GND Ground

WARNING! An electric shock can be fatal. Normally grounded conductors may be ungrounded and energized when a ground fault is indicated. The ground fault has to be repaired before operation is resumed.

NOTE! Do not connect the ground to the negative DC line at any point! This is already done within the inverter. If negative DC lines are connected to the DC terminals or prior to this to the ground, this will circumvent the GFDI protection system, preventing your inverter from properly detecting a fault current.

In addition, turning the DC disconnect to the OFF/open circuit condition will not disconnect the array from ground, as it only disconnects the DC positive.

The SunPower Corporation recommends a fuse with 1 A and dimensions of 10 x 38 mm for the solar module ground.
A corresponding fuse is installed in the fuse holder for the solar module ground upon delivery.

IMPORTANT! The following steps are necessary only if a solar module ground at the negative pole is required to protect the solar modules.

Wire cross section of solar module strings

WARNING! An electric shock can be fatal. Inadequately sized electrical components can cause serious injuries to persons and damage to (or loss of) property.

- All electrical installations must be carried out in accordance with the National Electrical Code, ANSI/NFPA 70, and any other codes and regulations applicable to the installation site.
- For installations in Canada, the installations must be done in accordance with applicable Canadian standards.
- Use minimum AWG 14, min. 167 °F (75 °C), copper wire for all grounding wires (see NEC table 250.122).
- Use minimum AWG 14 to maximum AWG 6, min. 167°F (75°C), copper wire for all DC wiring connections to the inverter. Voltage drop and other considerations may dictate larger size wires be used.
- Use only solid or stranded wire. Do not use fine stranded wire.

NOTE! To ensure an effective strain relief device for solar module strings, only use cable cross sections of the same size.

Solar module ground at negative pole: Connecting solar module strings

1

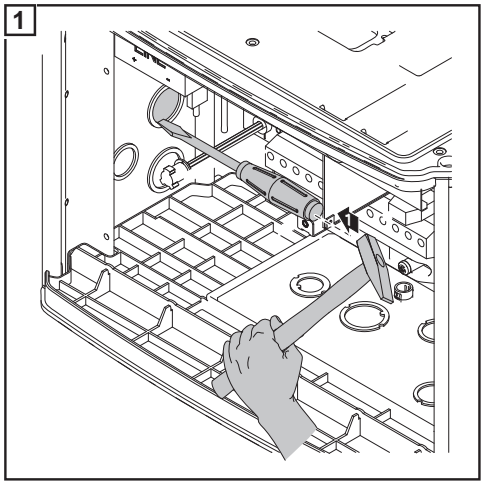

2

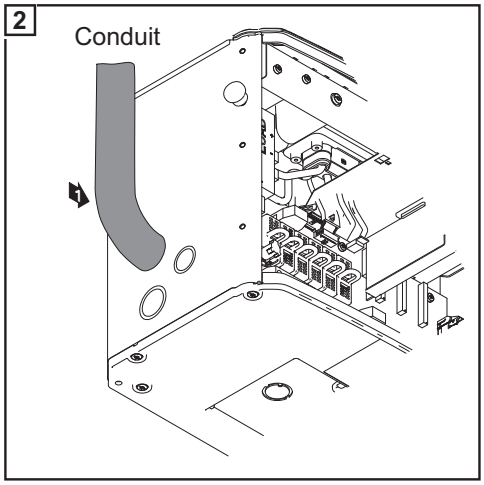

3

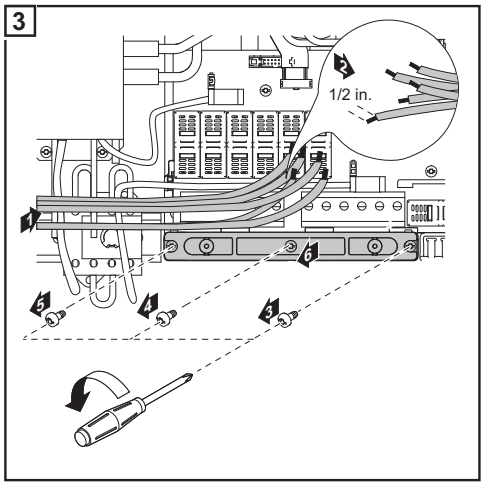

4

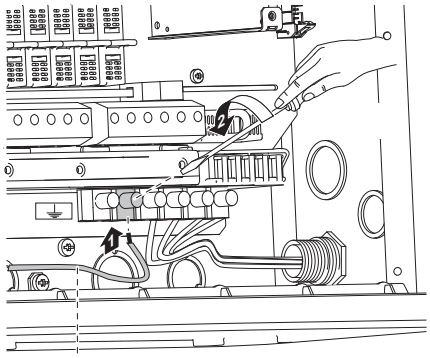

Tightening torque
Stranded wires 1.25 ft. lb.
Solid wires 0.81 ft. lb.

5

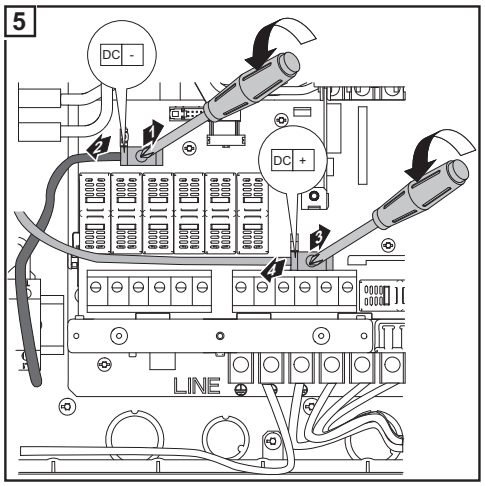

After disconnecting the DC main switch cable:

- Connect the DC+ cable to the DC- connection as per step 6
- Connect the DC- cable to the DC+ connection as per step 6
- Identify the reversed polarity as per steps 7 and 8 with (+) and (-).

6

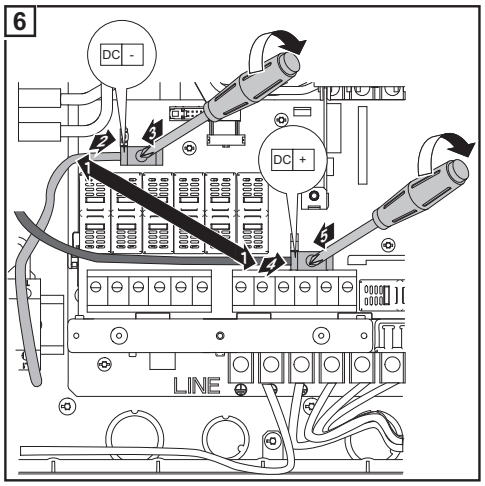

7

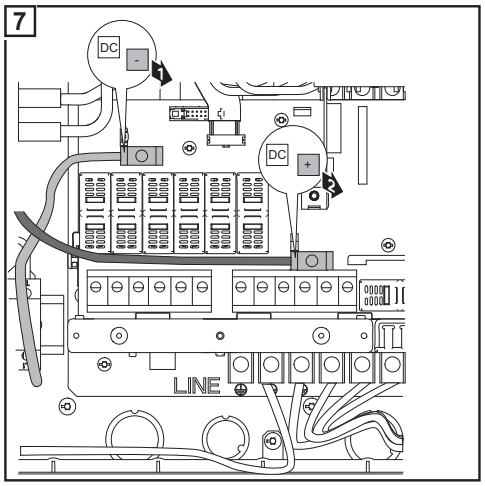

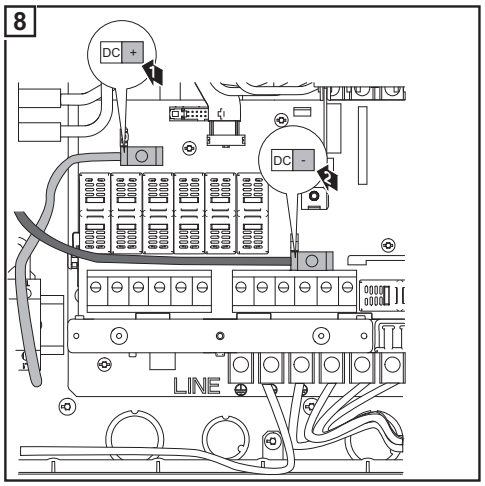

IMPORTANT! Additional to changing polarity of the DC main switch wires the inverter must be set for a solar module ground at the negative pole according to section "Commissioning" (Setting the inverter for solar module ground at negative pole) at commissioning.

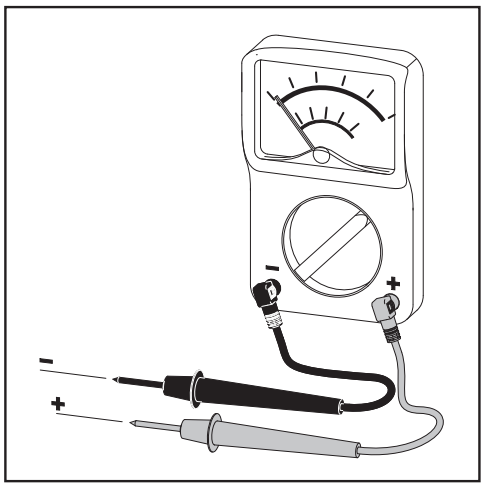

NOTE! Connecting the DC wiring with the wrong polarity may cause damage to the inverter. Check both the polarity and the open circuit voltage.

The DC Voltage must not exceed 600 V, regardless of temperature.

CAUTION! Danger of damaging the inverter by overload.

- Only connect a maximum of 20 A to an individual DC terminal.
- Connect the DC+ wire to the left connection of the inverter's DC terminals.
- Connect the DC- wire to the right connection of the inverter's DC terminals.
- Identify the reversed polarity as per step 11 with (+) and (-).

9

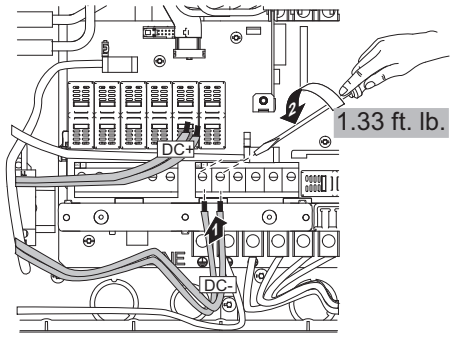

Tightening torque for solid and stranded wires

10

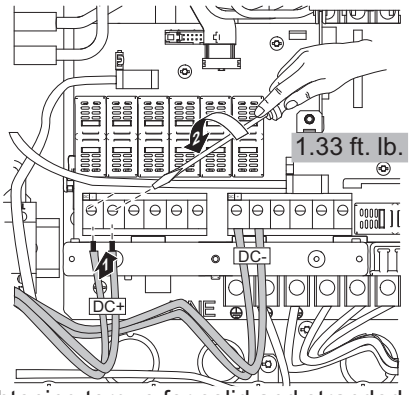

Tightening torque for solid and stranded wires

11

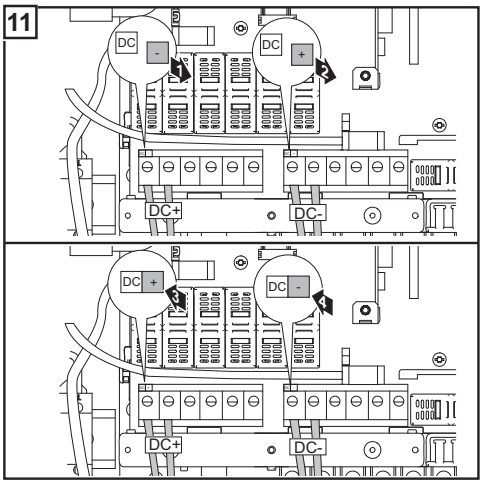

12

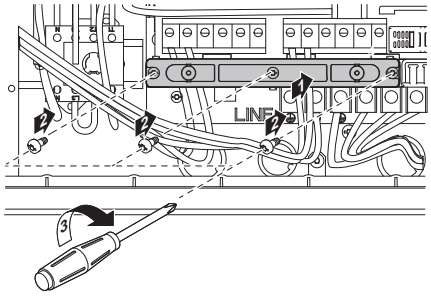

IMPORTANT!

- Set the jumper from the 'SMON' position to the 'SMOFF' position for correct measurement results
- Check the polarity and voltage of the solar module strings: the voltage should be a max. of 600 V, the difference between the individual solar module strings should be a max. of 10 V.

13

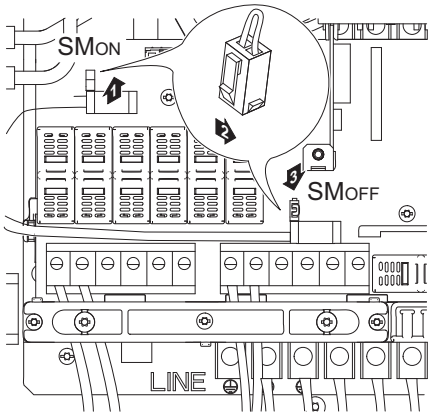

14

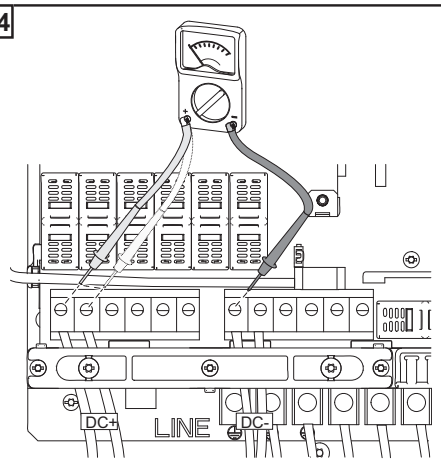

15

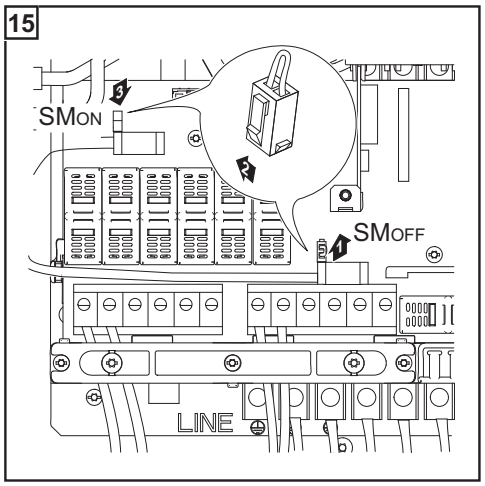

IMPORTANT! The inverter comes standard with 6 string fuses in the fuse holders.

- Insert string fuses only with fuse covers into the fuse holders.
- Do not operate the inverter without fuse covers.
- Follow all solar module safety instructions.

WARNING! An electric shock can be fatal. Danger from DC voltage from solar modules. Fuse covers are for installation purposes only. They offer no protection against contact.

16

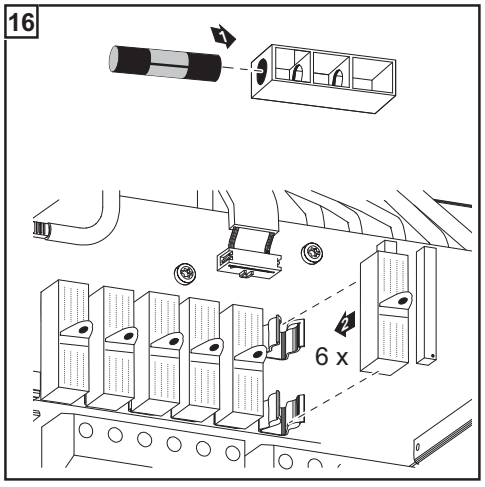

For more information on the string fuses, see the section "Criteria for the proper selection of string fuses."

Criteria for the Proper Selection of String Fuses

DC disconnect requirements

NEC 690.15-18 allows the use of fuse holders as a suitable means of disconnecting PV arrays for servicing.
Additional DC disconnects external to the inverter may be required by the local authority having jurisdiction.

General

The use of string fuses in the inverter also adds fuse protection to the solar modules.
A crucial factor for the fuse protection of solar modules is the maximum short circuit current I_{sc} of the respective solar module.

Criteria for the proper selection of string fuses

The following criteria must be fulfilled for each solar module string when using fuse protection:

- $I_N > 1.56 \times I_{SC}$
- $I_N < 2.00 \times I_{SC}$
- $V_N >/= 600$ V DC
- Fuse dimensions: Diameter 0.41 x 1.38 - 1.50 in. (10.3 x 35 -38 mm)

I_N Nominal current rating of fuse

I_{SC} Short circuit current for standard test conditions (STC) according to solar module data sheet

V_N Nominal voltage rating of fuse

NOTE! The string fuse size must not be greater than the maximum fuse size rating of the PV module as provided on the PV module manufacturers data sheet. If no maximum fuse size is indicated, please contact the PV module manufacturer.

Effects of Using Underrated Fuses

In underrated fuses, the nominal current value is less than the short circuit current of the solar module.
Effect:
The fuse may trip in intensive lighting conditions.

Fuse recommendations

NOTE! Only select fuses suitable for a voltage of 600 V DC.

You should only use the following fuses, which have been tested by manufacturer, to ensure problem-free fuse protection:

- Littelfuse KLKD fuses
- Cooper Bussmann PV fuses

The manufacturer shall not be liable for any damage or other incidents resulting from the use of other fuses. In addition, all warranty claims are forfeited.

Application example

Example: Maximum short circuit current (I_{SC}) of the solar module = 5.75 A

According to the criteria for selecting the correct fuse, the fuse must have a nominal current greater than 1.56 times the short circuit current:
5.75 A x 1.56 = 8.97 A

The fuse that should be selected according to the ‘Fuses’ table:
KLK D 9 with 9.0 A and 600 V AC / DC

Closing the inverter

Closing the inverter

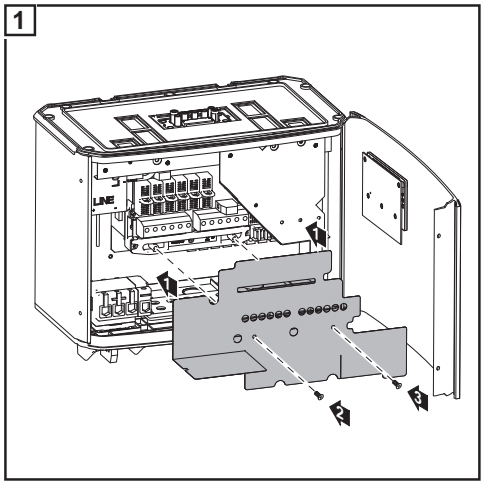

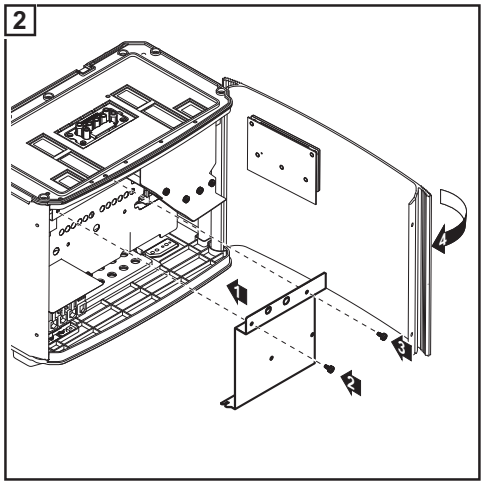

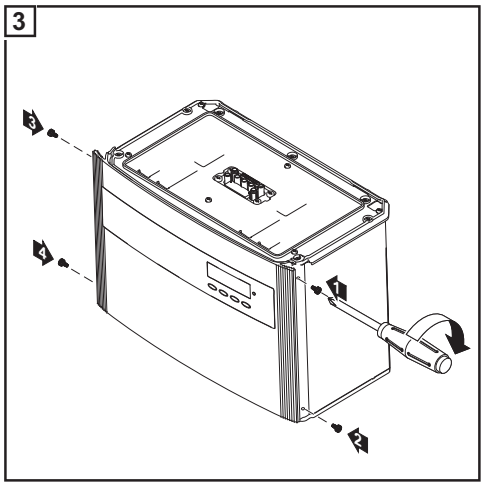

Opening the SunPower SPR-f for service/maintenance

Procedure for opening the inverter for service or maintenance:

1. Disconnect AC and DC supply from the inverter
2. Open the connection area
3. Turn off DC main switch
4. Allow the capacitors to discharge (5 minutes)
5. Remove metal covers
6. Remove the plastic dividers
7. Remove string fuses
8. Disconnect DC wires
9. Disconnect AC wires

Commissioning

Factory preset configuration

The inverter has been pre-configured in the factory and is ready for operation. You only have to set the available power grid for startup.

To change your inverter settings, please see section ‘The setup menu’ in the chapter ‘Operation.’

Requirements for start-up operation

- Inverter connected to the public grid (AC)
- Inverter connected to solar modules (DC)
- 3 plastic dividers inserted
- 2 metal covers mounted
- Power stage set mounted

NOTE! Do not operate the inverter without fuse covers.

Commissioning

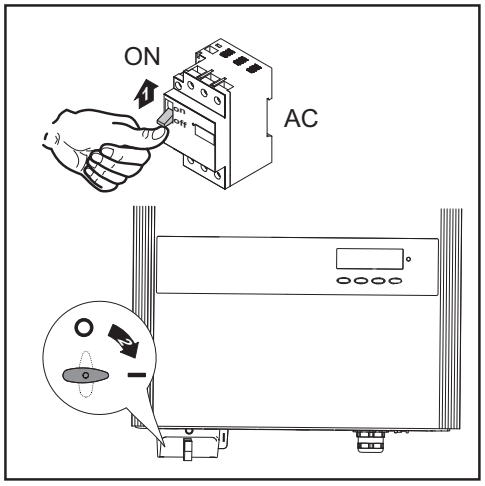

1 Turn on AC disconnect

2 Flip DC main switch to position - 1 -

As soon as the photovoltaic modules produce sufficient power, the Operating Status LED lights up orange.

The orange LED indicates that the feed-in mode of the inverter will begin shortly.

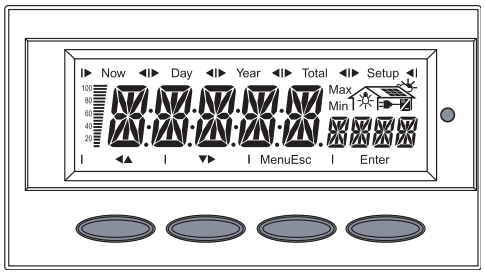

The screen displays the startup phase.

- Segment test
  All display elements light up for about one second.

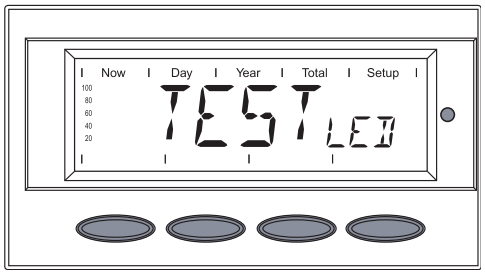

- The inverter goes through a master check list for several seconds.
  The display shows ‘TEST’ and indicates the respective component that is being tested (for example, ‘LED’).

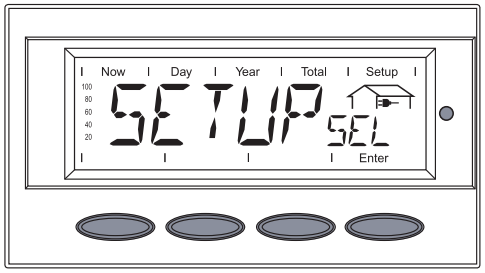

- The grid selection phase begins: 'SETUP SEL' is shown.

3 Press the ‘Enter’ key

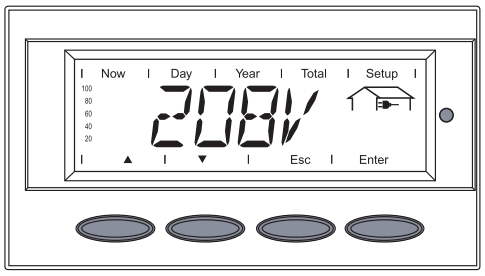

The first grid selection option is shown (e.g., 208 V).

4 Select the grid

Selecting the grid

Several grid selection options are displayed depending on the product type (see also section 'Connecting the SunPower SPR-f to the public grid’).

1 Use the ‘Up’ and ‘Down’ keys to select the desired grid:
▲ ▼

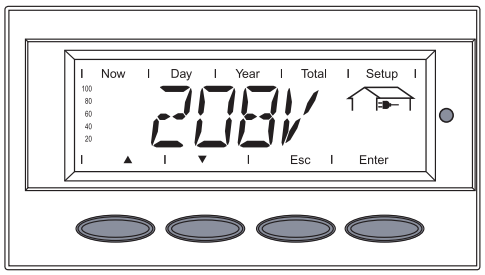

Grid voltage 208 V Delta
No neutral conductor in the system
Neutral conductor monitoring is deactivated

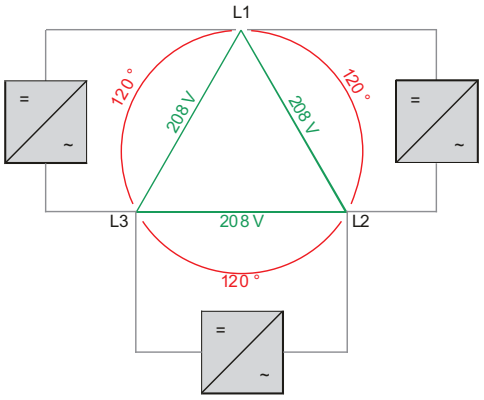

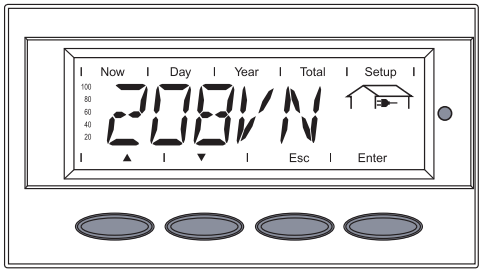

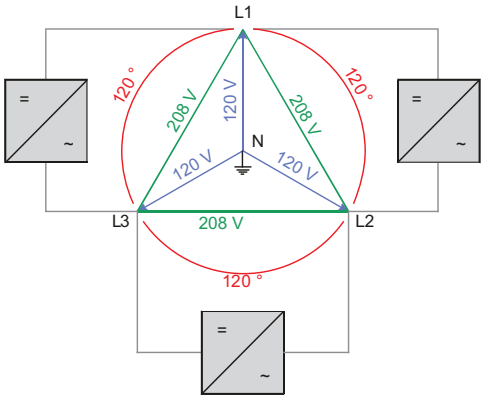

Grid voltage 208 V Delta: 120 V WYE
Neutral conductor available in the system
Neutral conductor monitoring is activated

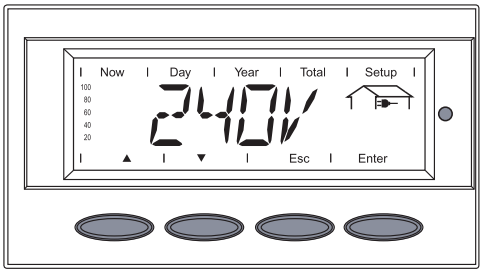

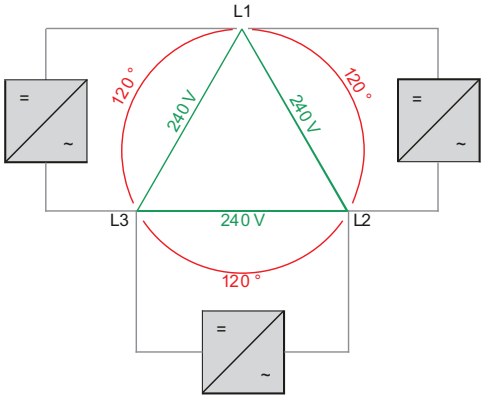

Grid voltage 240 V Delta
No neutral conductor in the system
Neutral conductor monitoring is deactivated

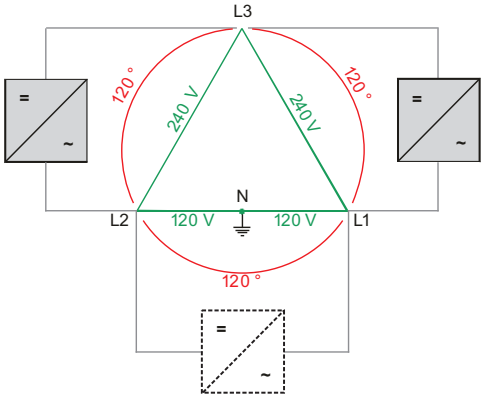

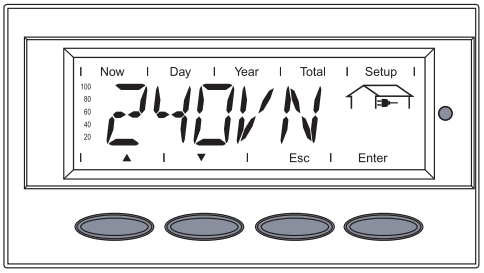

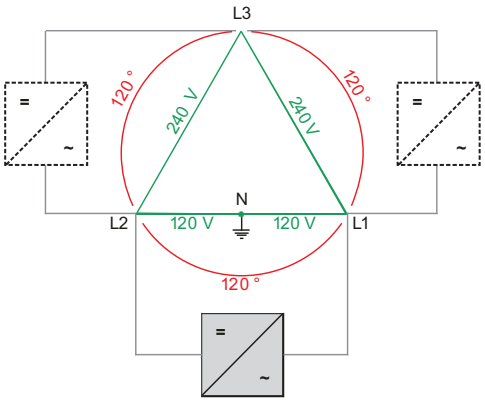

Grid voltage 240 V: 120 V Stinger
Neutral conductor available in the system
Neutral conductor monitoring is activated

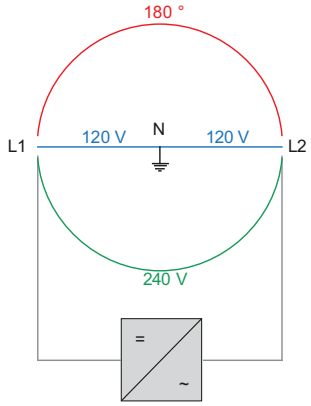

Grid voltage 240 V: 120 V Split Phase
Neutral conductor available in the system
Neutral conductor monitoring is activated

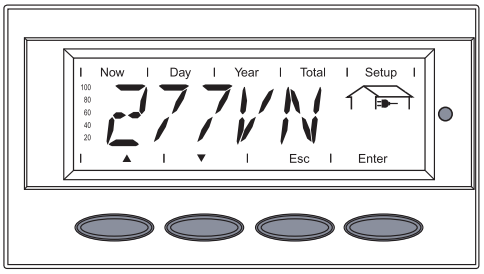

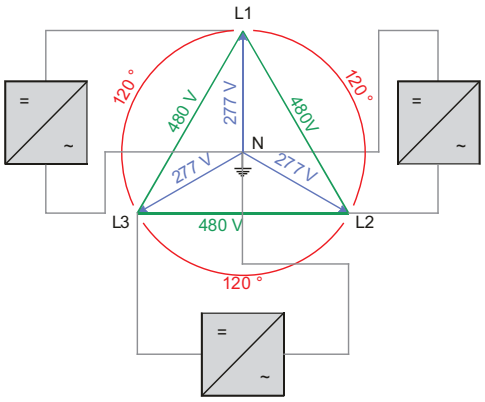

Grid voltage 480 V Delta: 277 V WYE
Neutral conductor available in the system
Neutral conductor monitoring is activated

2 Press the 'Enter' key 2x to confirm your grid selection (or use the 'Esc' key to return to grid selection)

The startup phase restarts with the segment test.

Setting the inverter for solar module ground at negative pole

NOTE! After the inverter is switched on, the corresponding grounding method must be set in the "Basic Service" menu if a solar module ground at the negative pole is required.

The following 5-digit access code must be entered to access the "Basic Service" menu: 22742.

1 Confirm any status codes displayed by pressing the "Enter" key

2 Press the "Menu" key

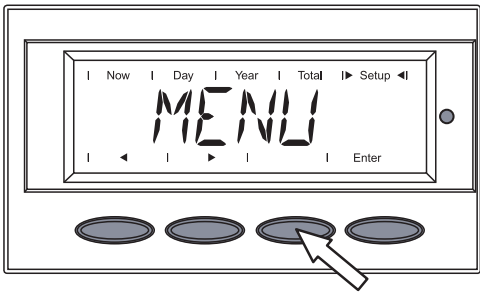

"Menu" is shown.

3 Select the "Setup" mode using the "Left" or "Right" keys ◀ ▶

4 Press the unoccupied "Esc" key 5 x

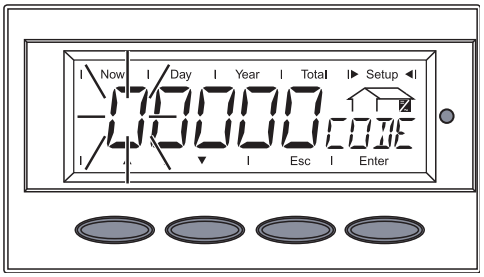

"CODE" is displayed, the first digit flashes.

5 Enter the access code 22742: Use the "Up" and "Down" keys to select a value for the first digit of the access code ▲ ▼

6 Press the "Enter" key

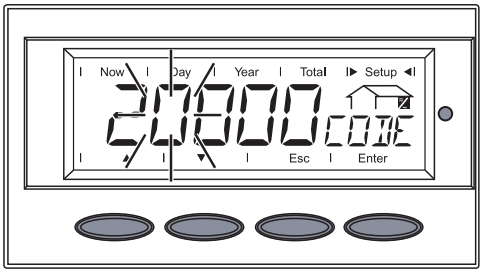

The second digit flashes.

7 Repeat steps 5 and 6 for the second, third, fourth and fifth digit of the access code until ...

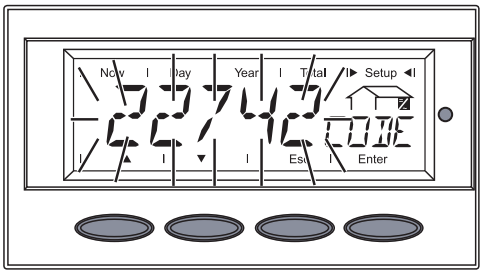

... the access code flashes.

8 Press the "Enter" key

The inverter is now in the "Basic Service" menu, the first parameter is displayed:

- "MIXMODE" for multiphase inverters
- "DCMODE" for one-phase inverters

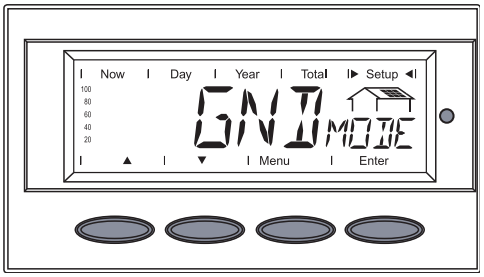

9 Use the "Up" or "Down" keys to select the "GNDMODE" parameter
▲ ▼

10 Press the "Enter" key

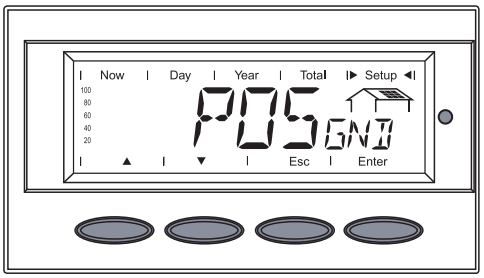

The set grounding method is displayed.

11 Use the "Up" and "Down" keys to select the grounding method:
▲ ▼

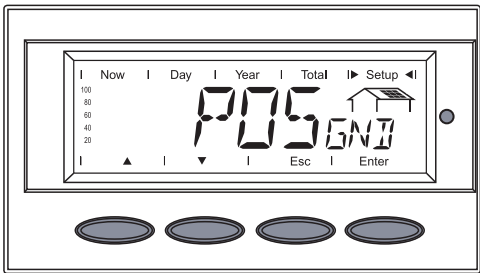

POS = solar module ground at positive pole (factory setting)

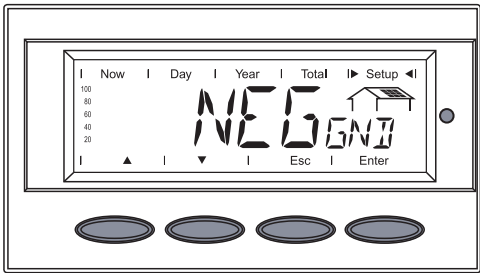

NEG = solar module ground at negative pole

12 Press the "Enter" key to apply the required grounding method

13 Press the "Esc" key to exit the "Basic Service" menu

Startup phase during startup operation

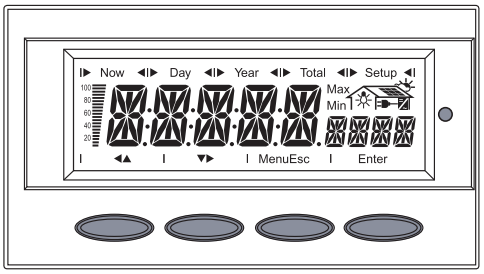

- Segment test
  All display elements light up for about one second.

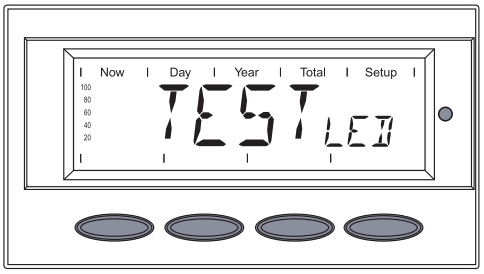

- The inverter goes through a master check list for several seconds.
  The display shows ‘TEST’ and indicates the respective component that is being tested (for example, ‘LED’)

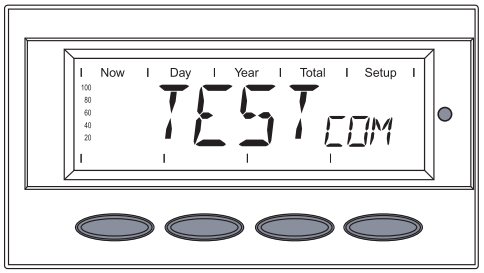

- ‘TEST COM’ is shown.

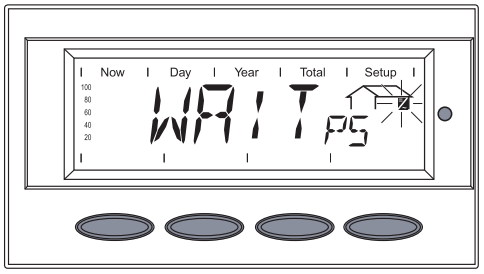

- Synchronization with grid:
  ‘WAIT PS’ is displayed, the inverter icon flashes: the inverter is waiting for all power stage sets in the network to be on stand-by. This procedure takes place dependent on the DC voltage.

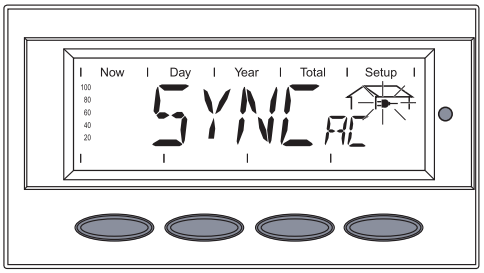

- Next, the display shows ‘SYNC AC,’ the grid icon flashes.

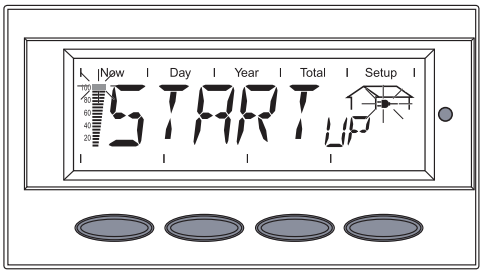

- Startup test:
  Before the inverter starts feeding energy into the grid, the conditions of the grid are tested in detail in accordance with local regulations. The display shows ‘START UP.’

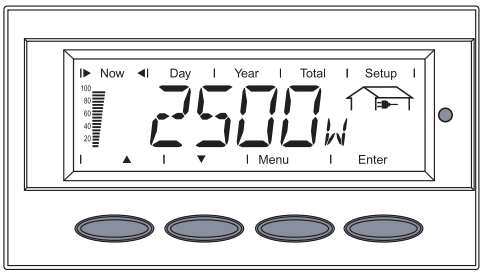

- Operation of feeding energy into the grid:
  After selecting the grid and when the tests are concluded, the inverter starts feeding energy into the grid.
  The display shows the present power feeding into the grid.
  The Operating Status LED lights up green, and the inverter starts operating.

IMPORTANT! For more information about the startup phase, please see the chapter 'Operation', section 'Product description SunPower SPR-f' (Startup phase, Test procedure).

Operation

Product description SunPower SPR-f

Controls and Indicators

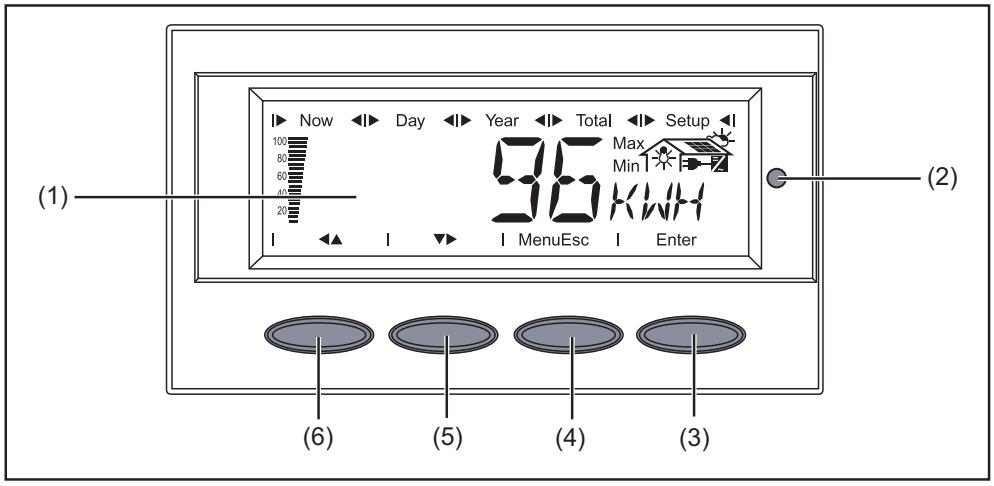

Item	Function
(1)	Display for displaying values, settings and menus
(2)	Operating Status LED for displaying the operating status
(3)	"Enter" key for confirming a selection
(4)	"Menu / Esc" key for scrolling through menu options for exiting the Setup menu
(5)	"Down/Right" key depending on the selection: for navigating down for navigating right
(6)	"Left/Up" key depending on the selection: for navigating left for navigating up

Display

The display unit's power is supplied via the safety-low voltage of the solar modules, which means that the display unit can be used in the daytime.

IMPORTANT! The inverter display is not a calibrated measuring instrument. A slight inaccuracy of a few percent is intrinsic to the system. A calibrated meter will be needed to make calculations for the power supply company.

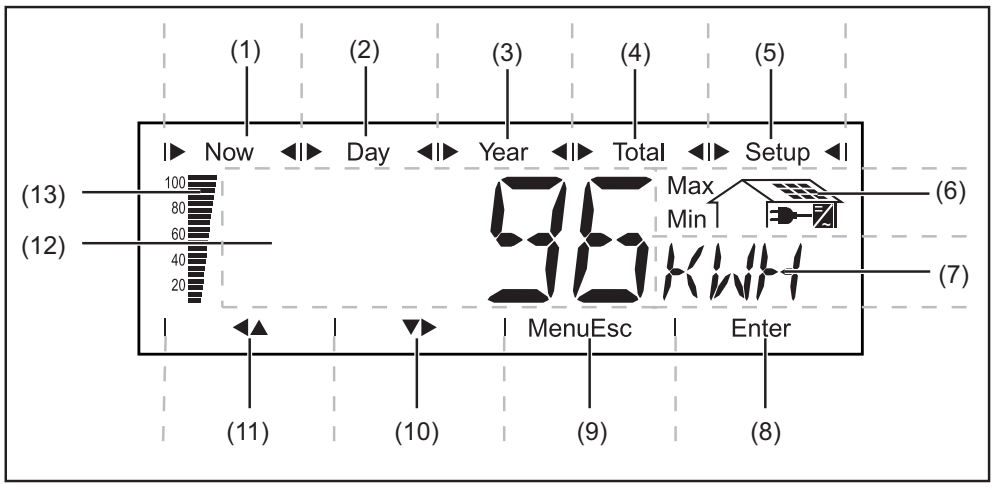

Item	Function
(1)	Icons for the "Now" display mode
(2)	Icons for the "Day" display mode
(3)	Icons for the "Year" display mode
(4)	Icons for the "Total" display mode
(5)	Icons for the "Setup" display mode
(6)	Icons for operating conditions

Max — The value shown represents the maximum value within the period of observation (depending on which display mode is selected).

Min — The value shown represents the minimum value within the period of observation (depending on which display mode is selected).

Important The minimum and maximum values displayed do not represent the absolute extreme values, because data is recorded only at two-second intervals.

... appears when values are displayed which are directly associated with the solar modules

Item	Function
	... appears when values are displayed which are directly associated with the public grid
	... appears with data readings that are directly related to the inverter
(7)	Range for display unit for displaying the applicable measuring unit
(8)	Icon for the "Enter" key
(9)	Icons for the "Menu/Esc" key
(10)	Icons for the "Down/Right" key
(11)	Icons for the "Left/Up" key
(12)	Range for display value for displaying the value
(13)	Output bar (not active during setup) indicates the output power fed into the grid at a given moment - regardless of the display mode chosen. The screen displays % of the maximum possible output power of your solar inverter

Operating Status LED

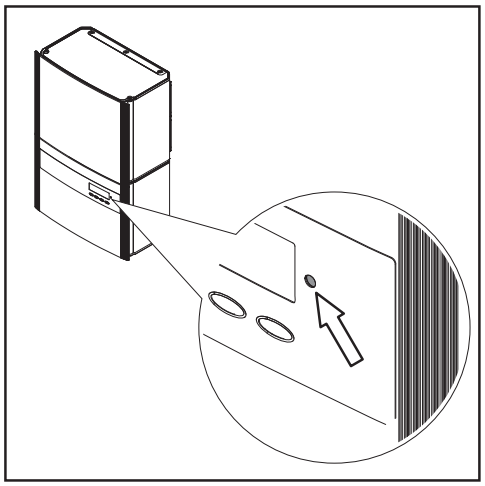

Position of Operating Status LED on the inverter

Depending on the operating status, the Operating Status LED assumes different colors:

Operating Status LED	Explanation
Steady green	The LED stays lit after the automatic startup phase of the inverter as long as power is being fed into the grid. It indicates problem-free operation of the photovoltaic system.

Operating Status LED	Explanation
Flashing green	The photovoltaic system is working correctly, a status code is on the display. When a status code is shown, rectify the relevant condition by going to the "Maintenance and Service" chapter, "Status Diagnosis and Troubleshooting" section. The status code can be acknowledged by pressing the "Enter" key.
Steady orange	The inverter enters an automatic startup phase as soon as the solar modules are delivering sufficient power after sunrise.
Flashes orange	A warning is shown on the display or the inverter has been set to standby operation in the Setup menu (= manual shutoff of operation). The next day, operation will resume automatically. During the time the LED flashes orange, operation can be resumed manually at any time (see section "The Setup Menu")
Steady red	General status: the respective status code is shown on the screen
Remains dark	There is no connection to the solar modules, no solar module power due to darkness.

A list of most status codes, the corresponding status information, their status causes and repair measures can be found in the chapter "Troubleshooting and Maintenance," section "Status Diagnosis and Troubleshooting."

Startup Phase and Grid Feed-in Mode

Startup phase

The inverter carries out a self test after being turned on automatically. Then a test of the public grid is carried out. This test takes five minutes. During the startup sequence the illumination of the Operating Status LED is yellow.

Test procedure

1. Segment test
   All display elements light up for about one second

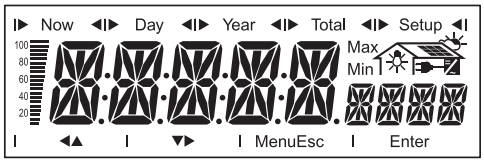

2. Self test of essential inverter components
   - The inverter goes through a master check list for several seconds
   - The display shows ‘TEST’ and indicates the respective component that is being tested (for example, ‘LED’)



3. Synchronization with grid:
   - ‘WAIT PS’ is displayed, the inverter icon flashes: The inverter is waiting for all power stage sets in the network to be on stand-by. This procedure takes place dependent on the DC voltage

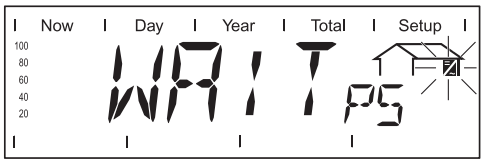

   - Next, the display shows ‘SYNC AC,’ the grid icon flashes.

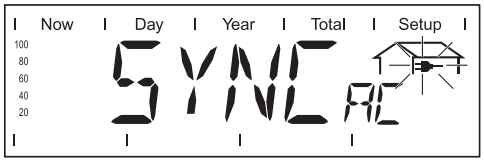

4. Startup test
   - Before the inverter starts feeding energy into the grid, the conditions of the grid are tested in accordance with local regulations.

- The display shows ‘START UP.’

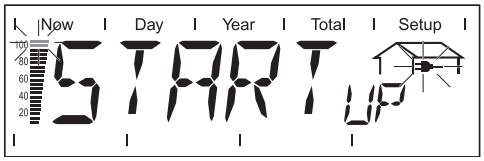

The startup test takes five minutes. The time elapsed is indicated by a bar shrinking from the top down.

Whenever two scale divisions stop flashing and disappear, 1/10 of the total duration of the test is over.

Operation of Feeding Energy into the Grid

- Once the tests have been completed, the inverter starts feeding power into the grid.
- The display shows the present power feeding into the grid.
- The Operating Status LED lights up green, and the inverter starts operating.

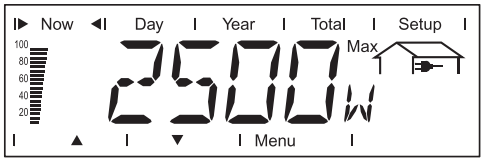

Navigation in the Menu Level

Activating display illumination

1 Press any key

The display illumination is activated.

If no key is pressed for 30 seconds, the display backlight goes out (provided that the display illumination is set to automatic in the Setup menu).

The Setup menu also offers a choice between a permanently lit or permanently dark display.

Accessing the Menu Level

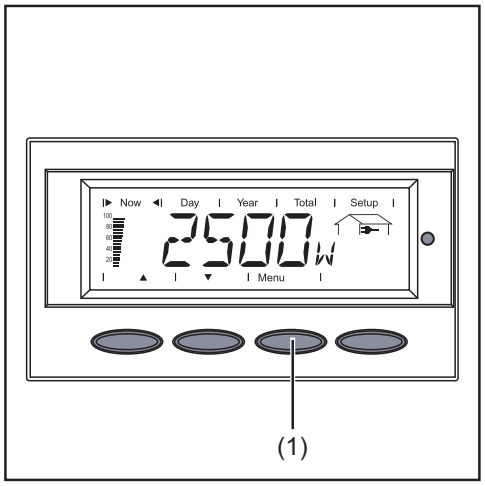

1 Press the "Menu" key (1)

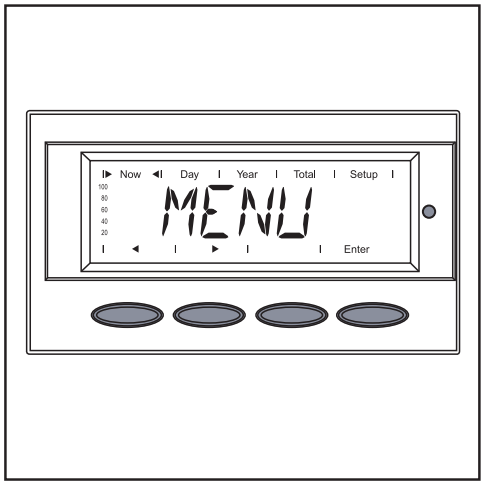

"Menu" will appear on the display

The inverter is now in the menu level.

From the menu level you can

- set the desired display mode
- access the Setup menu

The Display Modes

Display modes

"Now" display mode ..... shows current data

"Day" display mode ..... shows data for the current day

"Total" display mode ..... shows data since your inverter first started operating

Selecting a display mode

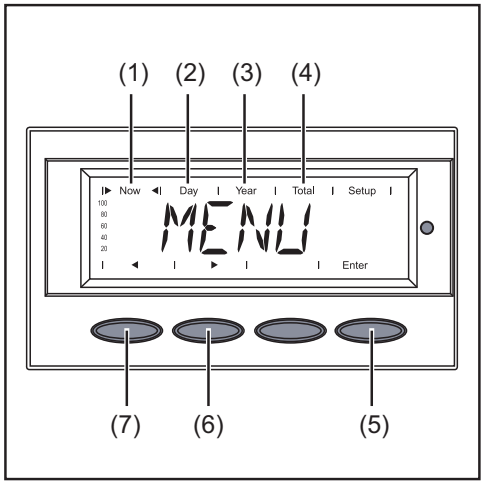

1. Access the menu level
2. Use the "left" (7) or "right" (6) keys to select your preferred display mode (1) - (4)
   ◀ ▶
3. Press "Enter" (5)

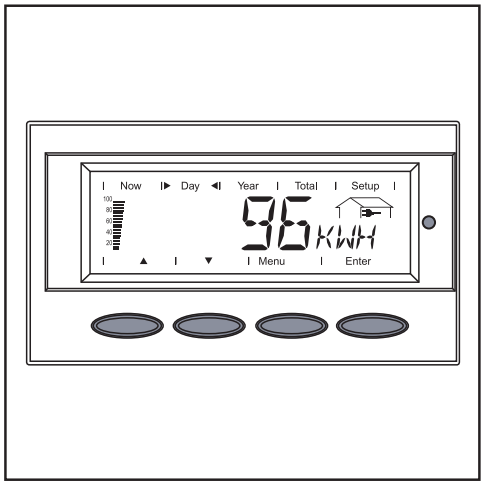

The selected display mode is shown, e.g., "Day" display mode.

IMPORTANT! The "Year" menu item is not available.

Overview of display values

Display mode	Icon	Unit	Optional	Display value
"Now"		W	-	Output power
		V	-	AC grid voltage
		A	-	Output current
		Hz	-	Grid frequency
		V	-	Solar module voltage
		A	-	Solar module current
		-	-	GFDI Status
		-	-	NLMON Communication
		HH:MM	x	Time
"Day"		kWh / MWh	-	Output energy
"Total"		Currency	-	Yield
		kg / T	-	CO_2 reduction
		W	-	Maximum output power
		V	-	Maximum grid voltage
		V	-	Minimum grid voltage
		V	-	Maximum solar module voltage
		HH:MM	-	Operating hours of the inverter

x Optional
If the required option card is not available, "N.A." (not available) is displayed.

Display Values in "Now" Display Mode

Selecting the "Now" Display Mode

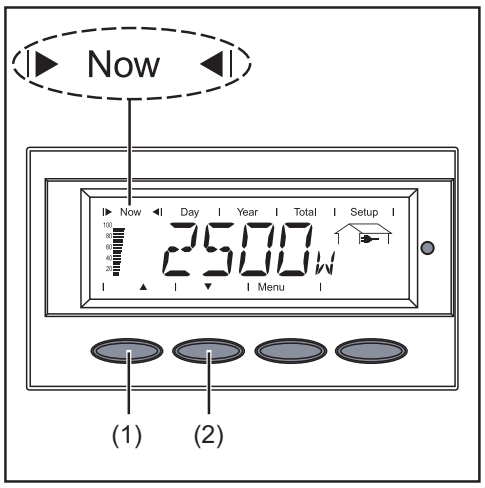

1 Select the "Now" display mode

The first display value in the "Now" display mode appears

2 Use the "Down" (2) key to scroll to the next display value

Scroll back using the "Up" key (1)

Display values in the 'Now' display mode

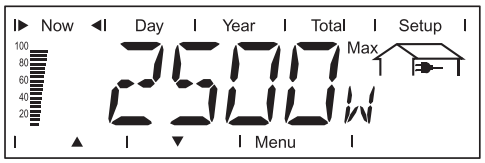

Output power
power supplied to grid at the particular moment (watts)

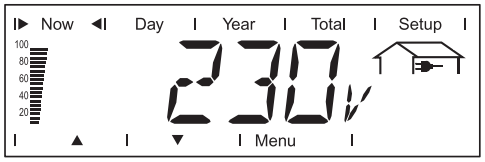

Grid voltage
External conductor voltage (volts)

The "Enter" key is active for multi-phase inverters.

For example, phase voltage for phase L1:

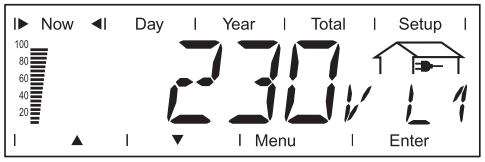

- The phase voltage can be displayed by pressing the "Enter" key.
- The phase voltage of the other phases can be displayed by pressing the "Up" and "Down" keys.
- You can return to the menu level by pressing the "Menu" key.

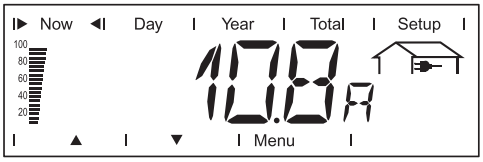

Output current
current supplied to the grid at the particular moment (amperes)

The "Enter" key is active for multi-phase inverters.

- The phase current can be displayed by pressing the "Enter" key.
- The phase current of the other phases can be displayed by pressing the "Up" and "Down" keys.
- You can return to the menu level by pressing the "Menu" key.

For example, phase current for phase L3:

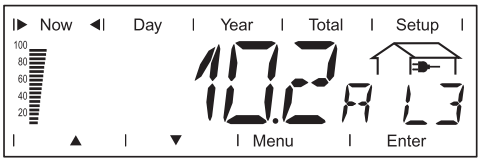

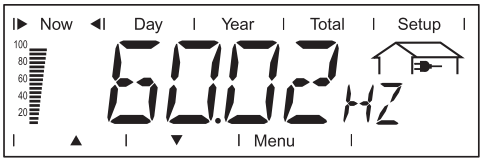

Grid frequency
(hertz)

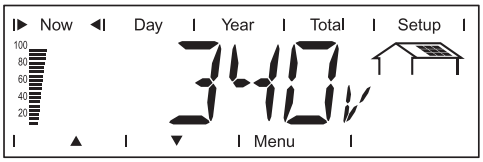

Solar module voltage
voltage of the solar modules at the moment of data display (volts)

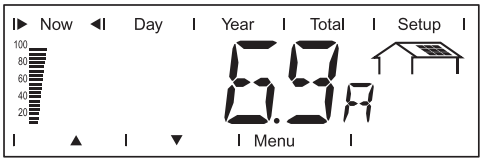

Solar module current
current supplied by solar modules at the moment of data display (amperes)

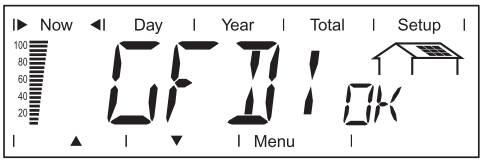

GFDI status
If there is no ground fault in the system, ‘GFDI OK’ is displayed

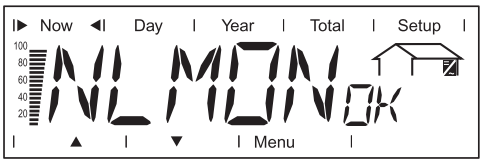

NL-MON communication
When there is communication with the ‘NL-MON’ plug-in card, ‘NLM-ON OK’ is displayed

"N.A." - display value not available

The display "N.A." indicates that the display value is not available. The icon and the unit of the display value are also shown on the display along with "N.A." (not available).

Example: unavailable display value for solar module temperature

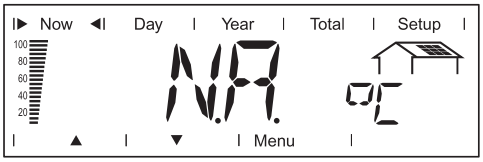

Display values in the Day / Total display modes

General

For the inverter, the day begins when it switches on. If the DC supply line is disconnected, the following parameters within the ‘Day’ display mode will be re-set after repeating the start-up:

- yield (currency can be selected)
- CO_2 reduction (lbs.)
- maximum output power (watts)
- maximum grid voltage (volts)
- minimum grid voltage (volts)
- operating hours of the inverter

Selecting "Day / Total" display modes

First display value in the "Day" display mode:

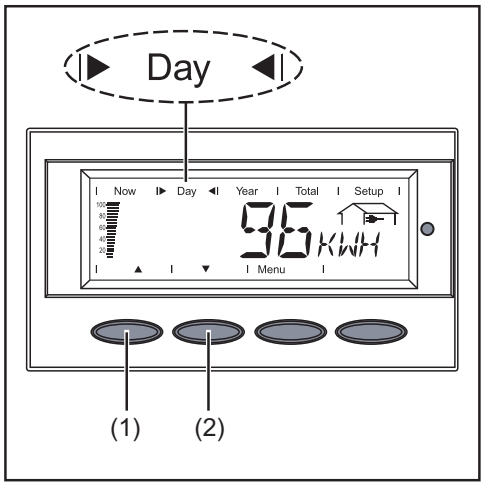

First display value in the "Total" display mode:

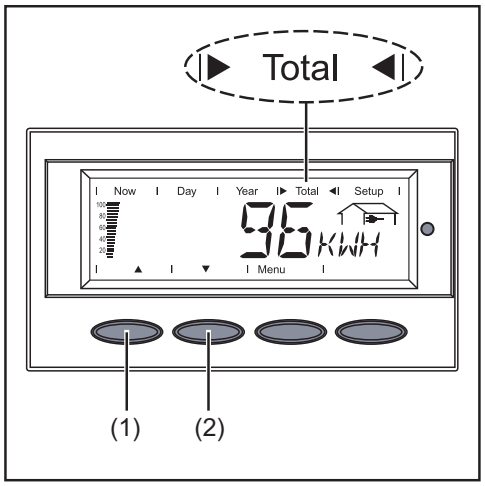

1 Select the "Day" or "Total" display mode

The first display value appears in the selected display mode.

2 Use the "Down" key (2) to scroll to the next display value

use the "Up" key (1) to scroll back

Display values in the ‘Day / Total’ display modes

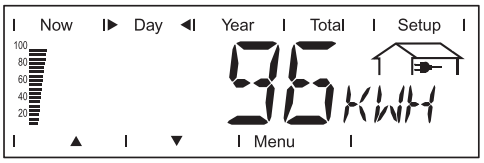

Output energy
energy supplied during the monitored period (kWh / MWh)

Due to the variety of different monitoring systems, there can be deviations between the readings of other metering instruments as compared to the readings from the inverter. For determining the energy supplied to the grid, only the readings of the calibrated meter supplied by the electric utility company are relevant.

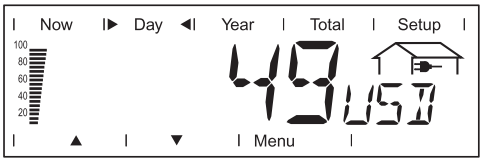

Yield
money earned during the monitored period (set currency and price per kWh in setup menu)

As was the case for the output energy, readings may differ from those of other instruments.

‘The Setup menu’ section describes how to set the currency and rate for the energy supplied. The factory setting depends on the respective country-specific setting.

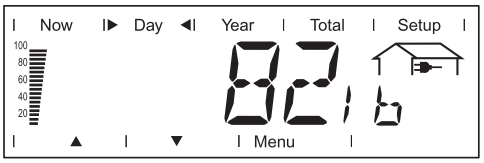

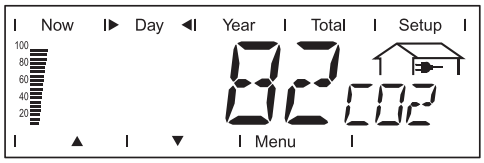

CO2 reduction
CO2 emissions saved during the monitored period
(lb / T; T = tons)
The area for unit display switches between ‘lb’ or ‘T’ and ‘CO2.’

The CO2 meter gives an indication of CO2 emissions that would be released during the generation of the same amount of electricity in a combustion power plant.
The factory setting for this is 1.3 lb/kWh.

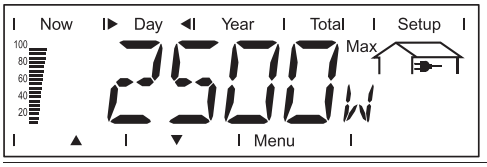

Maximum output power
highest output power (W) during the observation period

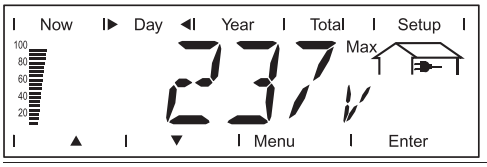

Maximum grid voltage
highest reading of grid voltage (V) during observation period

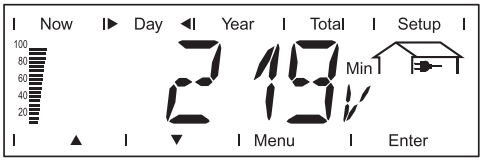

Minimum grid voltage
lowest reading of grid voltage (V) during observation period

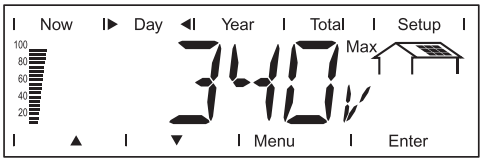

Maximum solar module voltage
highest reading of solar module voltage (V) during the observation period

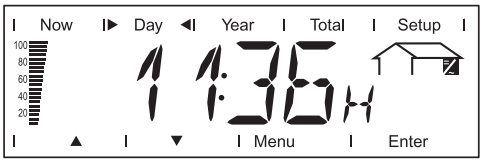

Operating hours
indicates how long the inverter has been operating
(HH:MM)

Duration of operation is shown in hours and minutes up to 999 h and 59 min (display: ‘999:59’). After that only full hours are displayed.

Although the inverter does not operate during the night, all sensor data are recorded around the clock.

"N.A." - display value not available

The display "N.A." indicates that the display value is not available. The icon and the unit of the display value are also shown on the display along with "N.A." (not available).

Example: unavailable display value for solar module temperature

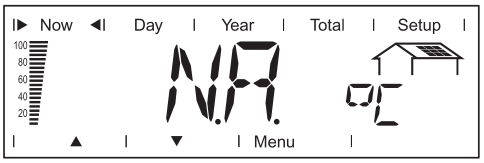

The Setup Menu

Presetting

The inverter is pre-configured and ready to use. No manual control is necessary for feeding the power it generates into the grid.

The setup menu allows easy readjustment of the inverter's preset parameters to your needs.

Accessing the Setup Menu

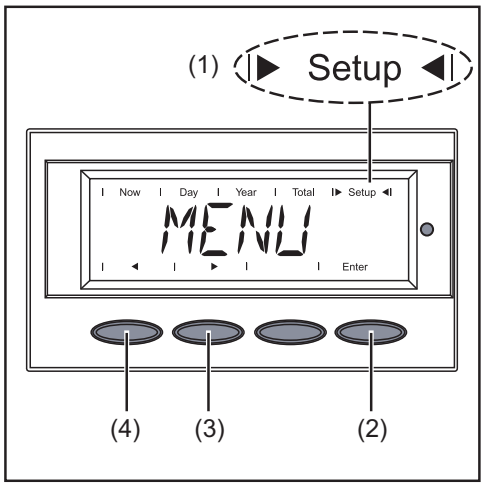

1. Switch to the menu level (press the "Menu" key)
2. Select the "Setup" (1) mode using the "Left" (4) or "Right" (3) keys
3. Press "Enter" (2)

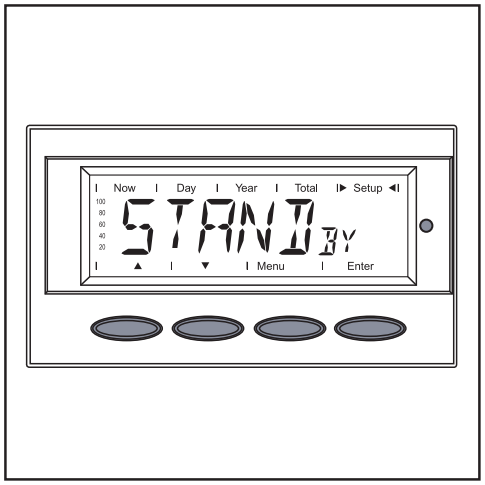

The Setup Menu’s first menu item "STANDBY" is shown.

Scrolling through Menu Items

Example: "STANDBY" menu item

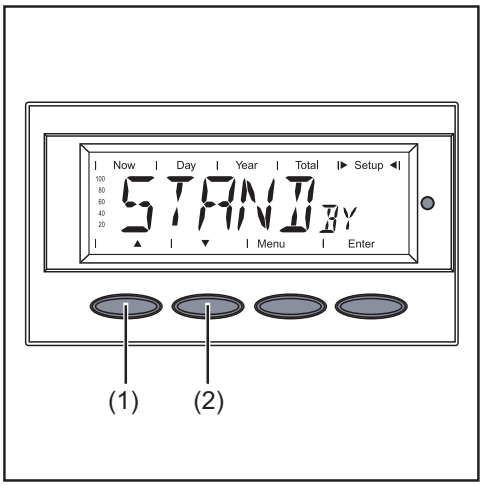

Example: "CONTRAST" menu item

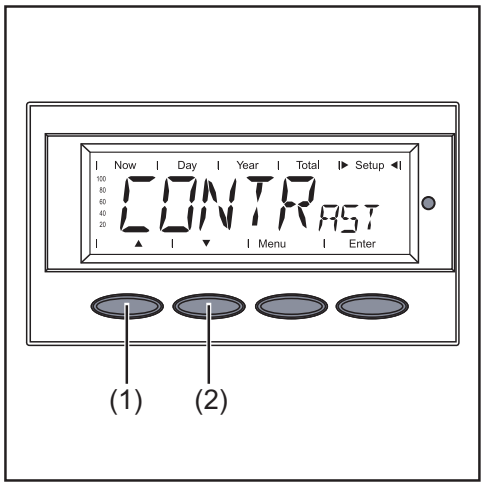

1 Access the Setup menu

2 Scroll through the available menu items using the "Up" (1) and "Down" (2) keys

Menu Items in the Setup Menu

STANDBY

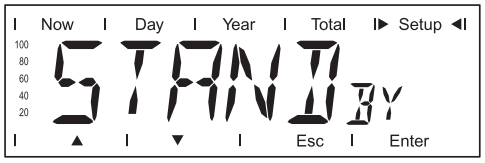

Manual activation / deactivation of Standby operation using the "Enter" key

Unit	-
Setting range	Enter
Factory setting	Automatic operation of feeding energy into the grid (Standby deactivated)

- The power electronics are switched off in standby mode. No power is fed into the grid.
- The Operating Status LED flashes orange.
- The orange flashing Operating Status LED stops at dusk.
- After the subsequent sunrise, the power supply operation into the grid is resumed automatically (after completion of the startup phase the LED is illuminated green).
- Grid supply operation can be resumed at any time whenever the LED is flashing orange (deactivate "STANDBY").

If the Standby mode is activated by pressing the "Enter" key, the display alternates between "STANDBY" and "Enter:"

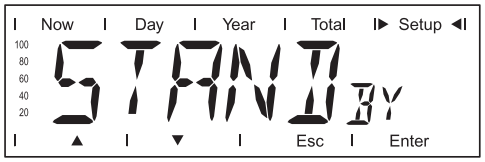

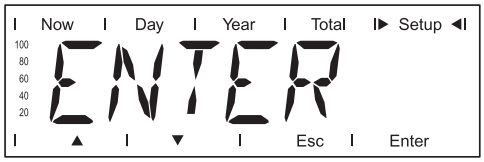

To maintain Standby operation:

- Press the "Esc" key

To end Standby operation:

- Press the "Enter" key

CONTRAST

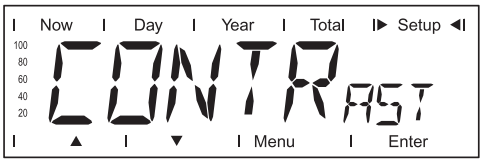

Contrast setting on LCD display

Unit	-
Setting range	0 - 7
Factory setting	7

Since contrast depends on temperature, it may be necessary to adjust the "CONTRAST" menu item when ambient conditions change.

LIGHT MODE

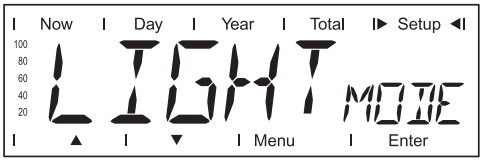

Initial setting for display illumination.

Unit	-
Setting range	AUTO / ON / OFF
Factory setting	AUTO

AUTO:	The display illumination will stop 30 seconds after the last time a key has been pressed.
ON:	The display will remain illuminated whenever power is supplied to the grid.
OFF:	The display illumination will be permanently off.

IMPORTANT! The "LIGHT MODE" setting only relates to the display's background illumination. The LCD display will still remain on during operation. Its energy consumption is less than one mW (1/1000 W).

CASH

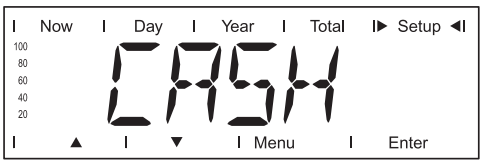

Setting of currency and rate for invoicing the energy supplied

Unit	-
Display area	Currency / Charge rate/kWh
Factory setting	USD

CO2

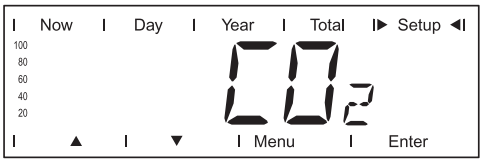

Setting of CO2 reduction factor

Unit	lb/kWh, T/kWh
Setting range	00,01 - 99,99
Factory setting	1.3

YIELD

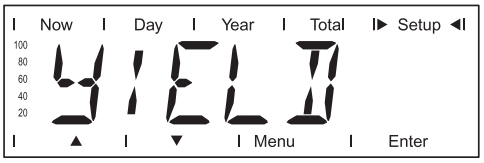

Setting

- an OFFSET value for the total energy display
- a measurement correction value for the Day, Year and Total energy display

Setting range	OFF SET / CALI.

OFF SET

Preset value for the output energy, added to the actual output energy (e.g., transfer value upon replacement of the inverter) and the SI prefix

Unit	Wh / kWh / MWh
Setting range	5-digit + k... / M...
	1 kWh = 1000 Wh 1 MWh = 1000000 Wh
Factory setting	0

CALI.

Preset correction value, so that the data shown on the inverter display corresponds to the calibrated data shown on the electric meter

Unit	%
Setting range	-5.0 - +5.0 in increments of 0.1
Factory setting	0

IG no.

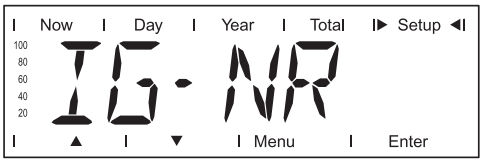

Number setting (address) of the inverter in a setup comprising multiple solar inverters linked together

Unit	-
Setting range	01 - 99 (100th inverter = 00)
Factory setting	1

IMPORTANT! Each inverter must be assigned its own address when connecting several inverters in a data communications system.

DAT COM

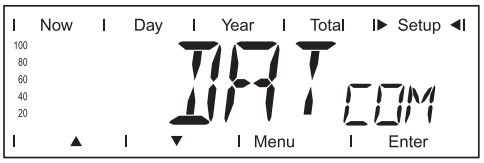

Data connection check

Unit	-
Setting range	OK COM or ERROR COM displays
Factory setting	-

STATE PS

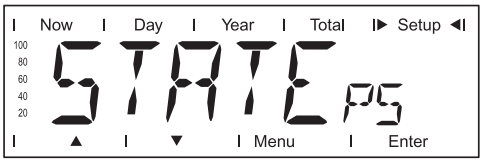

Status display of power stage sets; the last error that has occurred can be displayed

IMPORTANT! Due to the low level of irradiance early in the morning and in the evening, the status codes 306 (power low) and 307 (DC low) are displayed routinely at these times of day. These status messages do not indicate any kind of fault.

VERSION

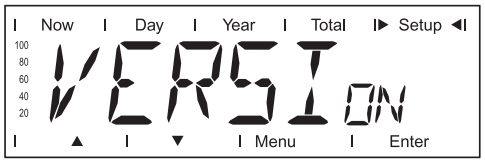

displays the version number and serial number of the electronic components (e.g., IG Brain, power stage sets, display, country setup)

Unit	-
Display area	MAIN CTRL / LCD / PS (PS00, PS01, PS02) / SETUP
Factory setting	-
MAINCTRL	Version information of the IG Brain unit (inverter controller)
LCD	Version information of the display
PS	Version information of the power stage sets (PS00 - max. PS02)
SETUP	Display of the currently set country setup You can display the current country setup (2 - 3 letters) by pressing the ‘Enter’ key, e.g., ‘US’ for USA country setup; You can exit the country setup display by pressing ‘Esc’

Setting and Displaying Menu Items

Setting Menu Items - General

1 Access the Setup menu

2 Use the "Up" or "Down" keys to select the desired menu item

▲ ▼

3 Press the "Enter" key

The first digit of a value to be set flashes:

4 Use the "Up" and "Down" keys to select a value for the first digit

▲ ▼

5 Press the "Enter" key

The second digit of the value flashes.

6 Repeat steps 4 and 5 until ...

the entire value flashes.

7 Press the "Enter" key

8 Repeat steps 4 - 6 for units or other values to be set until the unit or value flashes.

9 Press the "Enter" key to save and apply the changes.

Press the "Esc" key to not save the changes.

The currently selected menu item is displayed.

The available settings are displayed:

4 Use the "Up" and "Down" keys to select the desired setting

▲ ▼

5 Press the "Enter" key to save and apply the selection.

Press the "Esc" key to not save the selection.

The currently selected menu item is displayed.

Application example: setting the currency and rate

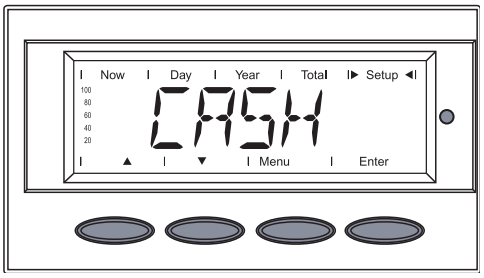

1 Select the ‘CASH’ menu item

2 Press the ‘Enter’ key

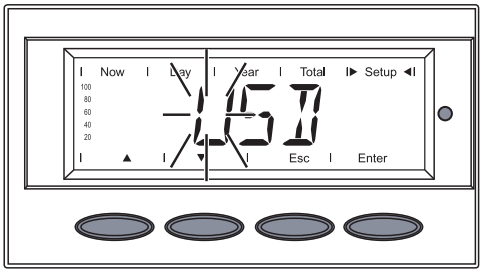

The currency is display, factory setting = ‘USD’;
The first character flashes.

3 Use the ‘Up’ and ‘Down’ keys to select a letter for the first character
▲ ▼

4 Press the ‘Enter’ key

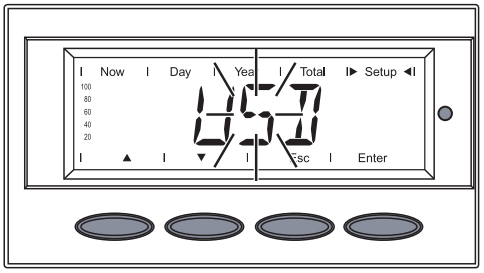

The second character flashes.

5 Use the ‘Up’ and ‘Down’ keys to
▲ ▼
select a letter for the second character

6 Press the ‘Enter’ key

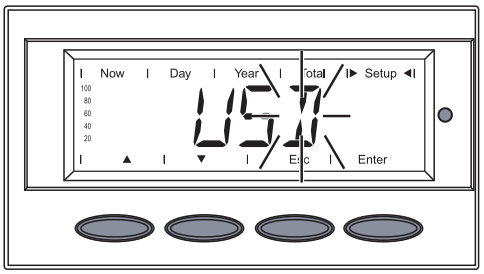

The third character flashes.

7 Use the ‘Up’ and ‘Down’ keys to select a letter for the third character
▲ ▼

8 Press the ‘Enter’ key

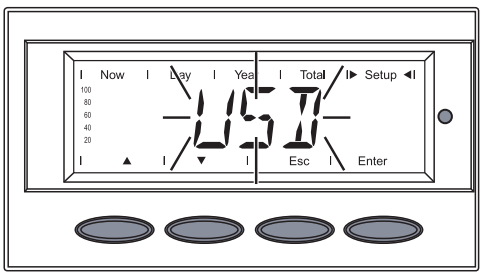

The set currency flashes.

9 Press the ‘Enter’ key

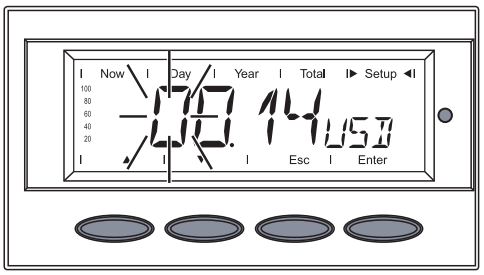

The rate for energy supplied is now displayed in kWh / currency, factory setting = 0.14 USD / kWh;
The first digit flashes.

10 Use the ‘Up’ and ‘Down’ keys to select a value for the first digit (e.g., 0)
▲ ▼

11 Press the ‘Enter’ key

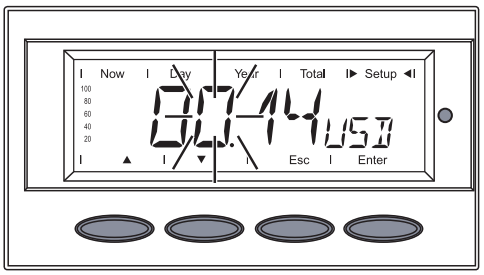

The second digit flashes.

12 Use the ‘Up’ and ‘Down’ keys to select a value for the second digit (e.g., 0)
▲ ▼

13 Press the ‘Enter’ key

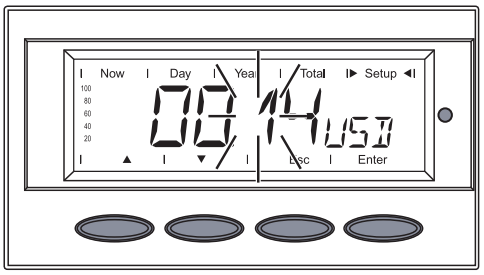

The first digit after the decimal point flashes.

14 Use the ‘Up’ and ‘Down’ keys to select a value for the first digit after the decimal point (e.g., 4)
▲ ▼

15 Press the ‘Enter’ key

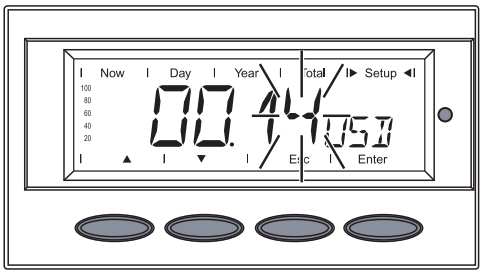

The second digit after the decimal point flashes.

16 Use the ‘Up’ and ‘Down’ keys to select a value for the second digit after the decimal point (e.g., 8)
▲ ▼
The values that can be set range from 00.01 to 99.99.

17 Press the ‘Enter’ key

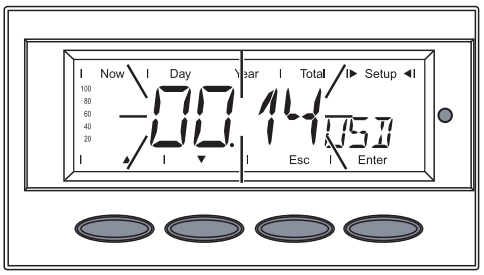

The set rate for energy supplied flashes.

18 Press the ‘Enter’ key

The currency and the rate for supplied energy are now accepted.

19 Press the ‘Esc’ key to exit the ‘CASH’ menu item

Troubleshooting and Maintenance

Status Diagnosis and Troubleshooting

Displaying Status Codes

Your inverter is equipped with a self diagnostic system that automatically identifies a large number of possible operation issues by itself and displays them on the screen. This enables you to know immediately if there are any malfunctions in the inverter, the photovoltaic system or any installation or operating errors.

Whenever the self diagnostic system has identified a particular issue, the respective status code is shown on the screen.

IMPORTANT! Status codes may sometimes appear briefly as a result of the control response from the inverter. If it subsequently continues to operate normally, there has not been a system error.

Normal Operation Status Codes

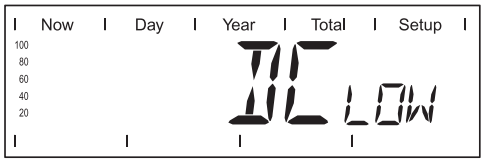

The open circuit voltage of the solar modules is too low.

As soon as the open circuit voltage exceeds 265 V, the inverter starts synchronizing with the grid (display shows "SYNC AC").

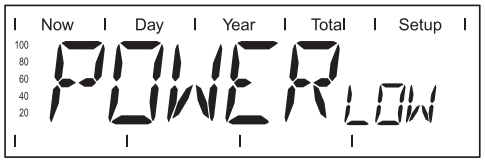

The total power output of the solar modules is insufficient.

After a short time the inverter resumes grid synchronization (display shows "SYNC AC").

Total failure

If the display remains dark for a long time after sunrise:

- Check the open circuit voltage of the solar modules at the connections of inverter:

  Open circuit voltage < 265 V ... Error in the photovoltaic system

  Open circuit voltage > 265 V ... may indicate a basic fault in the inverter. In this case, notify a trained service technician.

Status codes on SunPower SPR-f with several power stage sets

A special status diagnostic is run if an error occurs in an inverter with several power stage sets.

It is also possible to call up state messages even if there is no actual error in existence. This form of status polling may be found in the section ‘The Setup menu.’

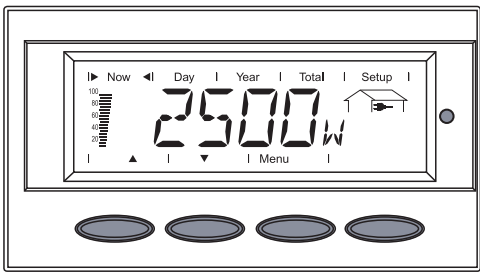

Display in normal operation

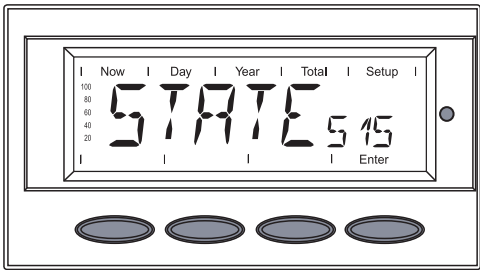

When there is an error in one of the two power stage sets, the display flashes between ‘STATE’ and the corresponding status message (e.g., ‘STATE 515’)

and

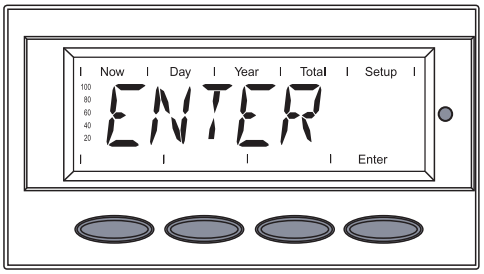

‘ENTER’

- Press the ‘Enter’ key twice

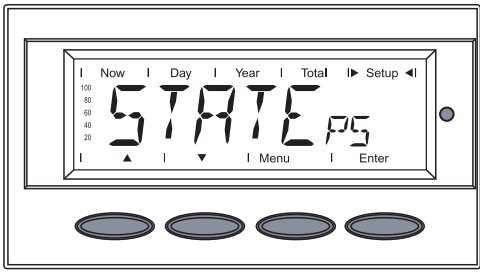

- The status display of the power stage sets appears (‘STATE PS’)
- Press the ‘Enter’ key

Class 1 Status Codes

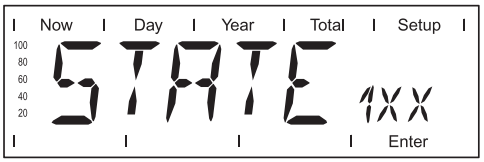

Class 1 status codes are typically temporary. Their cause lies in the public grid.

The initial response of the inverter is to disconnect itself from the grid. The grid is subsequently checked for the stipulated monitoring period. If after the end of this period no further defect is identified, your inverter resumes operating and feeding power into the grid.

IMPORTANT! The 2nd position x defines the exact network point for the following status codes:

0 = several / all 3 phases
1 = L1
2 = L2
3 = L3

1x2

AC voltage too high

Behavior	Grid conditions are thoroughly tested and as soon as they are again within the permissible range, the inverter will resume feeding power into the grid.
Remedy	Check grid connections and fuses Should the status code persist, you should contact your system installer

1x3

AC voltage too low

Behavior	Grid conditions are thoroughly tested and as soon as they are again within the permissible range, the inverter will resume feeding power into the grid.
Remedy	Check grid connections and fuses Should the status code persist, you should contact your system installer

1x5

AC frequency too high

Behavior	Grid conditions are thoroughly tested and as soon as they are again within the permissible range, the inverter will resume feeding power into the grid.

Remedy	Check grid connections and fuses Should the status code persist, you should contact your system installer

1x6

AC frequency too low

Behavior	Grid conditions are thoroughly tested and as soon as they are again within the permissible range, the inverter will resume feeding power into the grid.
Remedy	Check grid connections and fuses Should the status code persist, you should contact your system installer

1x7

No AC grid detected

Behavior	Grid conditions are thoroughly tested and as soon as they are again within the permissible range, the inverter will resume feeding power into the grid.
Remedy	Check grid connections and fuses Should the status code persist, you should contact your system installer

108

Islanding detected

Behavior	Grid conditions are thoroughly tested and as soon as they are again within the permissible range, the inverter will resume feeding power into the grid.
Remedy	Should the status code persist, you should contact your system installer

109

General grid error

This error is always displayed first for grid errors. After reviewing all power stage sets, the grid error is specified in more detail: 1x1 / 1x4 or the display remains at "109" (e.g., when 2 phases report "104" and one phase "101")

Behavior	Grid conditions are thoroughly tested and as soon as they are again within the permissible range, the inverter will resume feeding power into the grid.

Remedy	Check grid connections and fuses Should the status code persist, you should contact your system installer

Class 2 Status Codes

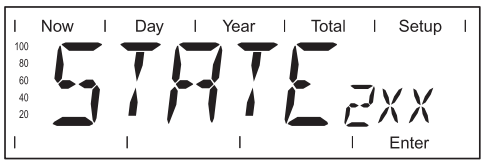

Status codes of class 2 are typically temporary. Their cause lies in the grid.

The first reaction of the inverter is to disconnect from the grid. Subsequently, the grid will be checked for the duration of the observation period stipulated. If after the end of this period no further defect is identified, the inverter resumes operating and feeding power into the grid.

IMPORTANT! The 2nd position x defines the exact network point for the following status messages:
0 = several / all 3 phases
1 = L1
2 = L2
3 = L3

2x2

Grid voltage exceeds admissible limits

Behavior	As soon as the grid voltage has returned to admissible range, the inverter resumes feeding power into the grid.
Remedy	Check grid voltage; if the status code persists you should contact your electrical contractor

2x3

Grid voltage below admissible limits

Behavior	As soon as the grid voltage has returned to admissible range, the inverter resumes feeding power into the grid.
Remedy	Check grid voltage, if the status code persists you should contact your electrical contractor

207

No grid voltage detected

Behavior	As soon as the grid conditions have returned to admissible range, the inverter resumes feeding power into the grid.
Remedy	Check grid connections and fuses; if the status code does not disappear you should contact your electrical contractor

Class 3 status codes

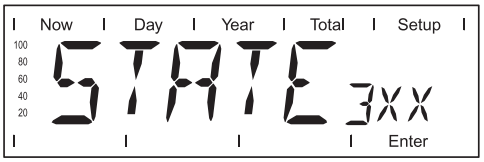

Class 3 comprises status codes that may appear during feed-in operation and that do not cause a permanent interruption of the operation of feeding power into the grid.

After automatic disconnection from the grid and waiting for its conditions to return to those stipulated, your inverter will try to resume feed-in operation.

301

Overcurrent (AC)

Description	Short interruption of power feeding into the grid due to overcurrent. The inverter returns to the startup phase.
Remedy	Fault is rectified automatically If this status code keeps recurring, contact your system installer

302

Overcurrent (DC)

Description	Short interruption of power feeding into the grid due to overcurrent. The inverter returns to the startup phase.
Remedy	Fault is rectified automatically If this status code keeps recurring, contact your system installer

303

Over-temperature buck converter

Description	Short interruption of power feeding into the grid due to over-temperature. The inverter returns to the startup phase.
Remedy	Fault is rectified automatically If this status code keeps recurring, contact your system installer

304

Over-temperature cooling element

Description	Short interruption of power feeding into the grid due to over-temperature. The inverter returns to the startup phase.
Remedy	Fault is rectified automatically If this status code keeps recurring, contact your system installer

305

No power transfer to grid possible

Description	Continual interruption of grid feed operation
Remedy	Should the status code persist, you should contact your system installer

'POWER LOW' (306)

Intermediate circuit voltage has dropped below permissible threshold value for feed in.
This error is shown on the inverter in plain text.

Description	Short interruption of power feeding into the grid. The inverter returns to the startup phase.
Remedy	Fault is rectified automatically If this status code keeps recurring, contact your system installer

'DC LOW' (307)

DC input voltage is too low for feed in.
This error is shown on the inverter in plain text.

Description	Short interruption of power feeding into the grid. The inverter returns to the startup phase.

Remedy	Fault is rectified automatically If this status code keeps recurring, contact your system installer

308

Intermediate circuit voltage too high.

Description	Short interruption of power feeding into the grid. The inverter returns to the startup phase.
Remedy	Fault is rectified automatically If this status code keeps recurring, contact your system installer

Class 4 status codes

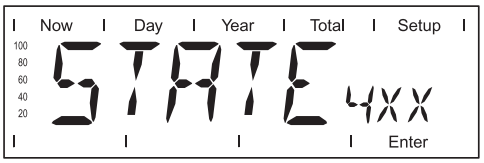

Class 4 status codes may require the intervention of a trained service technician.

401

No internal communication with power stage set

Description	The inverter will automatically attempt to connect again and, if possible, resume feeding power into the grid
Remedy	Check grid connections and fuses If status code persists: contact a trained service technician

402

Communication with EEPROM not possible

Description	The inverter will automatically attempt to connect again and, if possible, resume feeding power into the grid.
Remedy	If status code persists: contact a trained service technician

403

EEPROM faulty

Description	The inverter will automatically attempt to connect again and, if possible, resume feeding power into the grid.
Remedy	If status code persists: contact a trained service technician

406

One or both temperature sensors are defective

Description	The inverter disconnects from the grid for safety reasons.
Remedy	If status code persists: contact a trained service technician

407

Temperature sensor at cooling element defective

Description	The inverter disconnects from the grid for safety reasons.
Remedy	If status code persists: contact a trained service technician

408

Direct current feed in

Description	The inverter disconnects from the grid for safety reasons.
Remedy	If status code persists: contact a trained service technician

412

The "fixed voltage" setting has been selected instead of MPP voltage operation and the voltage is set to a value that is too low, or the DC voltage exceeds allowable limits.

Description	Fixed voltage lower than the current MPP voltage.
Remedy	Remove excess solar modules so DC voltage fits within inverter limits If the status code persists: contact a trained service technician

413

Control problems

Description	The inverter briefly disconnects from the grid, if AC voltage or frequency are out of range.
Remedy	If status code persists: contact a trained service technician

414

EEPROM faulty

Description	Memory deleted
Remedy	If status code persists: contact a trained service technician

416

Communication with IG Brain not possible.

Description	The Operating Status LED lights up orange, then the inverter attempts a restart.
Remedy	If status code persists: contact a trained service technician

417

Two power stage sets have the same PC board number

Description	The inverter stops feeding power into the grid, the display shows a critical error via a red Operating Status LED
Remedy	If status code persists: contact a trained service technician

419

Two or more power stage sets with an identical software serial number detected.

Description	The inverter stops feeding power into the grid, the display shows a critical error via a red Operating Status LED
Remedy	If status code persists: contact a trained service technician

421

PC board number has been set incorrectly

Description	The inverter stops feeding power into the grid, the display shows a critical error via a red Operating Status LED.
Remedy	If status code persists: contact a trained service technician

425

Communication with the power stage set is not possible

Description	The Operating Status LED lights up orange, then the inverter attempts a restart.
Remedy	If status code persists: contact a trained service technician

431

All power stage sets are in boot mode.

Description	The inverter stops feeding power into the grid, the display shows a critical error via a red Operating Status LED.
Remedy	Update firmware using Bootloader

Switches between SLAVE / DC LOW or SLAVE / POWER LOW (439)

The MPP master power stage set is switched off because of an error in a slave power stage set (in the balance mode).

Description	The inverter stops feeding power into the grid, the display shows a critical error via a red Operating Status LED.
Remedy	If status code persists: contact a trained service technician

442

No phase master for a phase

Description	The inverter stops feeding power into the grid, the display shows a critical error via a red Operating Status LED.

Remedy	If status code persists: contact a trained service technician

443

Energy transfer not possible

Description	The inverter stops feeding power into the grid, the display shows a critical error via a red Operating Status LED.
Remedy	If status code persists: contact a trained service technician

445

Invalid power stage set configuration

Description	The inverter stops feeding power into the grid, the display shows a critical error via a red Operating Status LED.
Remedy	If status code persists: contact a trained service technician

446

Internal communication error with the NL-MON plug-in card

Description	The inverter will automatically attempt to connect again and, if possible, resume feeding power into the grid
Remedy	Check grid connections and fuses; If status code persists: contact a trained service technician

447

The NL-MON plug-in card has interrupted grid monitoring

Description	The inverter will automatically attempt to connect again and, if possible, resume feeding power into the grid
Remedy	If status code persists: contact a trained service technician

448

The neutral conductor N is not connected

Description	The inverter disconnects from the grid for safety reasons.
Remedy	If status code persists: contact a trained service technician

450

The monitoring of the power stage set main processor ‘Guard’ is active

Description	The inverter stops feeding power into the grid, the display shows a critical error via a red Operating Status LED.
Remedy	If status code persists: contact a trained service technician

451

The EEPROM Guard Control is defective

Description	The inverter stops feeding power into the grid, the display shows a critical error via a red Operating Status LED.
Remedy	If status code persists: contact a trained service technician

452

Communication between ‘Guard’ and the digital signal processor (DSP) has been interrupted

Description	The inverter stops feeding power into the grid, the display shows a critical error via a red Operating Status LED.
Remedy	If status code persists: contact a trained service technician

453

Error in grid voltage recording

Description	The inverter stops feeding power into the grid, the display shows a critical error via a red Operating Status LED.
Remedy	If status code persists: contact a trained service technician

454

Error in grid frequency recording

Description	The inverter stops feeding power into the grid, the display shows a critical error via a red Operating Status LED.
Remedy	If status code persists: contact a trained service technician

455

Reference power source for AC measurement is operating outside of tolerances

Description	The inverter stops feeding power into the grid, the display shows a critical error via a red Operating Status LED.
Remedy	If status code persists: contact a trained service technician

456

Error during anti-islanding test

Description	The inverter stops feeding power into the grid, the display shows a critical error via a red Operating Status LED.
Remedy	If status code persists: contact a trained service technician

457

Grid relay stuck

Description	The inverter stops feeding power into the grid, the display shows a critical error via a red Operating Status LED.
Remedy	If status code persists: contact a trained service technician

460

Reference power source for the digital signal processor (DSP) is operating outside of tolerances

Description	The inverter stops feeding power into the grid, the display shows a critical error via a red Operating Status LED.
Remedy	If status code persists: contact a trained service technician

461

Error in DSP data memory

Description	The inverter stops feeding power into the grid, the display shows a critical error via a red Operating Status LED.
Remedy	If status code persists: contact a trained service technician

464

Display error

The software and/or hardware versions of the display and IG Brain are not compatible.

Description	The inverter stops feeding power into the grid, the display shows a critical error via a red Operating Status LED.
Remedy	Update firmware using Bootloader

465

Display error

The UI command sent from the IG Brain is not recognized by the present display version.

Description	The inverter stops feeding power into the grid, the display shows a critical error via a red Operating Status LED.
Remedy	If status code persists: contact a trained service technician

466

Display error

The display was not detected.

Description	The inverter stops feeding power into the grid, the display shows a critical error via a red Operating Status LED.

Remedy	Check the display for damage, connect display, check ribbon wire for damage, check IG Brain for damage If status code persists: contact a trained service technician

467

The display has not received a start command from the IG Brain for longer than 6 s.

Description	The inverter will automatically attempt to connect again and, if possible, resume feeding power into the grid.
Remedy	If status code persists: contact a trained service technician

469

Output choke connected to wrong poles

Description	The inverter stops feeding power into the grid, the display shows a critical error via a red Operating Status LED.
Remedy	Properly connect output choke If status code persists: contact a trained service technician

470

The buck converter relay does not open at high DC voltage

Description	The inverter stops feeding power into the grid, the display shows a critical error via a red Operating Status LED.
Remedy	Check system configuration If status code persists: contact a trained service technician

472

Ground fault detected

Description	Inverter is blocked from feeding energy into the grid.
Remedy	Replace GFDI fuse.

Class 5 status codes

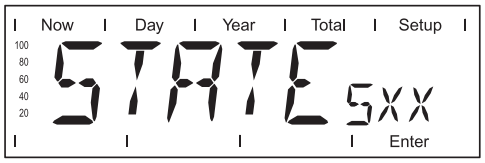

Class 5 status codes generally do not impair the operation of feeding power into the grid. They will be displayed until the service code is acknowledged by pressing a key (the inverter, however, continues working normally in the background).

- press any key
- error message disappears

501

One of the two fans is defective

Description	Low power generation because the temperature in the unit is too high.
Remedy	If status code persists: contact a trained service technician

504

No Solar Net communication possible

Description	Inverter address issued twice.
Remedy	Change inverter address (section: ‘The Setup menu’)
Description	The Solar Net components required are in the inverter: However, communication is still not currently possible.
Remedy	Status code will disappear after changing the inverter address

505

EEPROM faulty

Description	Data from the Setup menu are lost.
Remedy	Remedied automatically

506

EEPROM faulty

Description	Data from the ‘Total’ menu are lost.

Remedy	Remedied automatically

507

EEPROM faulty

Description	Data from the ‘Day’ / ‘Year’ menu are lost.
Remedy	Remedied automatically

508

Inverter address incorrect

Description	Address for data communication is no longer saved.
Remedy	Set address again

509

24h no feed in

Description	Example: solar modules covered with snow
Remedy	Example: remove snow from solar modules

510

EEPROM faulty

Description	SMS settings were restored to default.
Remedy	If necessary, reconfigure SMS

511

EEPROM faulty

Description	Sensor card settings were restored to default
Remedy	If necessary, reconfigure metering channels

512

Too many power stage sets in the system

Description	Too many power stage sets have been detected in the system.
Remedy	If status code persists: contact a trained service technician

513

Power stage set in boot mode

Description	One or more power stage sets cannot be activated because they are in boot mode.
Remedy	Update power stage set firmware

514

No communication with one of the power stage sets

Description	Warning message from one of the power stage sets, second power stage set working normally
Remedy	If status code persists: contact a trained service technician

515

Faulty plug connections

Description	Temperature sensor on cooling element faulty or not connected properly.
Remedy	If status code persists: contact a trained service technician

516

Status codes present for one of the power stage sets

Description	It is not possible to activate all power stage sets
Remedy	Carry out analysis. For more information, see the ‘The setup menu’ section. If status code persists: contact a trained service technician

517

Change of master has taken place

Description	Transformer not connected / not plugged in Bridge short-circuit Detection of intermediate circuit voltage damaged
Remedy	Check possible errors referred to in ‘Description.’ If status code persists: contact a trained service technician

550

String fuse defective.

Description	One or more string fuses are defective.

Remedy	Test string fuses and replace any that are defective

550

Jumper set incorrectly

Description	The jumper on the C-Box PC board was not reset to the ‘SMon’ position after the solar module strings were checked
Remedy	Set the jumper on the C-Box PC board to the ‘SMon’ position

553

Phase master deactivated due to frequently occurring errors

Description	A reintegration of the power stage set into the Mix network will be attempted at a later time.
Remedy	If status code persists: contact a trained service technician

554

NL-Mon EEPROM error

Description	Default set switch off limits were restored automatically.
Remedy	System-specific changes in the ‘Advanced’ service menu have to be redone; If status code persists: contact a trained service technician

558

Feature deactivated (e.g., inverter control via the Power Control Box option)

Description	A feature had to be deactivated (e.g., after component replacement). The status message is no longer displayed after the next DC disconnect.
Remedy	Confirm error, update firmware using Bootloader, if required (The inverter will also operate problem-free without updating the firmware)

Customer Service

IMPORTANT! Please contact your SunPower dealer or a trained service partner if

- an error appears frequently or for a long period of time
- an error appears that is not listed in the tables

Maintenance

Safety

WARNING! An electric shock can be fatal. Danger from grid voltage and DC voltage from solar modules.

- The connection area should only be opened by a licensed electrician.
- The separate power stage set area should only be disconnected from the connection area after first being disconnected from the grid power.
- The separate power stage set area should only be opened by trained service personnel.

Never work with live wires! Prior to all connection work, make sure that the AC and DC wires are not charged.

The DC main switch is used only to switch off power to the power stage set. When the DC main switch is turned off, the connection area is still energized.

These servicing instructions are for use by qualified personnel only. To reduce the risk of electric shock, do not perform any servicing other than that specified in the operating instructions.

WARNING! An electric shock can be fatal. Danger from residual voltage from capacitors.

You must wait until the capacitors have discharged. Discharge takes 5 minutes.

General

The inverter is designed so that it does not require additional maintenance. However, there are a few points to keep in mind during operation to ensure that the inverter functions optimally.

Operation in Dusty Environments

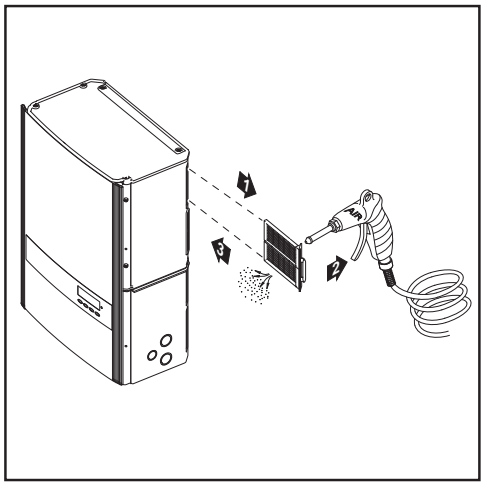

When operating the inverter in extremely dusty environments:
Remove the fan cover and clean the integrated fly screen as required

Opening the SunPower SPR-f for service/maintenance

Procedure for opening the inverter for service or maintenance:

1. Disconnect AC and DC supply from the inverter
2. Open the connection area
3. Turn off DC main switch
4. Allow the capacitors to discharge (5 minutes)
5. Remove metal covers
6. Remove the plastic dividers
7. Remove string fuses
8. Disconnect DC wires
9. Disconnect AC wires

Replacing String Fuses

Safety

WARNING! An electric shock can be fatal. Danger from grid voltage and DC voltage from solar modules.

- The connection area should only be opened by a licensed electrician.
- Never work with live wires! Prior to all connection work, make sure that the AC and DC wires are not charged.
- The DC main switch is used only to switch off power to the power stage set. When the DC main switch is turned off, the connection area is still energized.

These servicing instructions are for use by qualified personnel only. To reduce the risk of electric shock, do not perform any servicing other than that specified in the operating instructions.

WARNING! An electric shock can be fatal. Danger from residual voltage from capacitors.

You must wait until the capacitors have discharged. Discharge takes 5 minutes.

Preparation

NOTE! Disconnected AC and DC supply from the inverter.

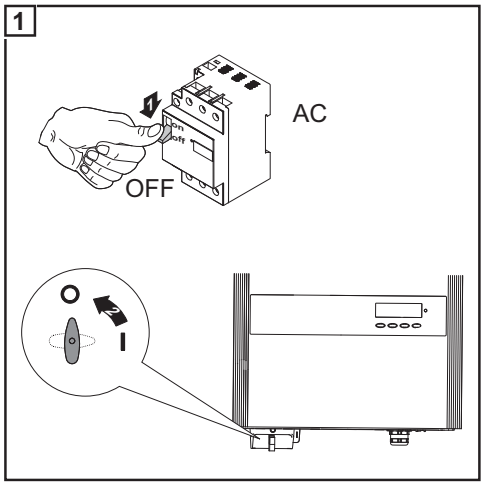

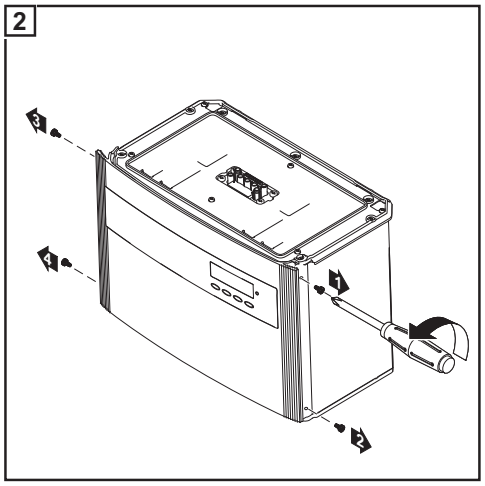

3

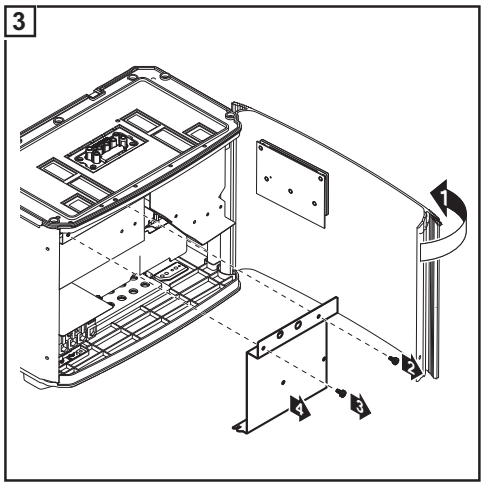

4

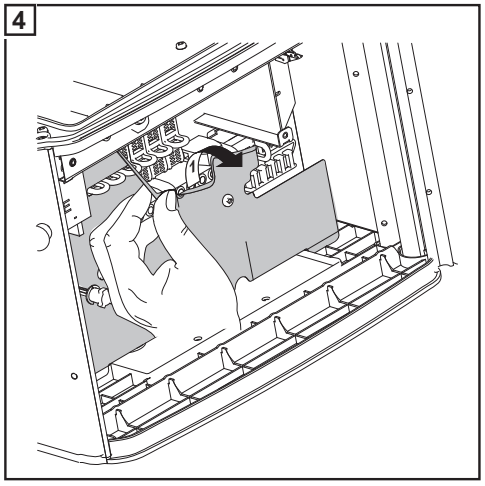

Lift up plastic dividers in the area of thestring fuses

Replacing string fuses

WARNING! An electric shock can be fatal. Danger from DC voltage from solar modules.

- Never remove a fuse while it is under load.
- Fuse covers are for installation purposes only. They offer no protection against contact.

1 Test the fuse holder at the terminal for continuity

NOTE! Only use fuses for solar modules that meet the criteria for the proper selection of string fuses.

Fuse data: Diameter 0.406 x 1.378 - 1.496 in. (10.3 x 35 - 38 mm), 600 V DC

2

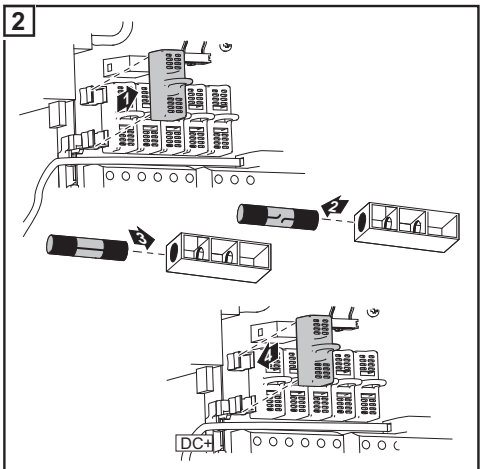

3 After replacing the fuse:

- Find out and correct the cause for the defective fuse

Finally...

1

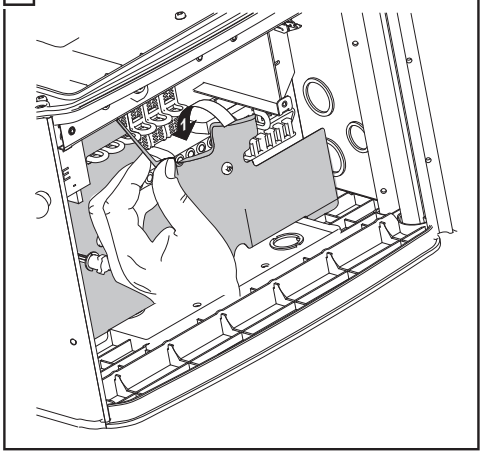

Return plastic dividers to their proper position.

IMPORTANT! Make sure that the plastic dividers are underneath any data communication wires that are present.

2

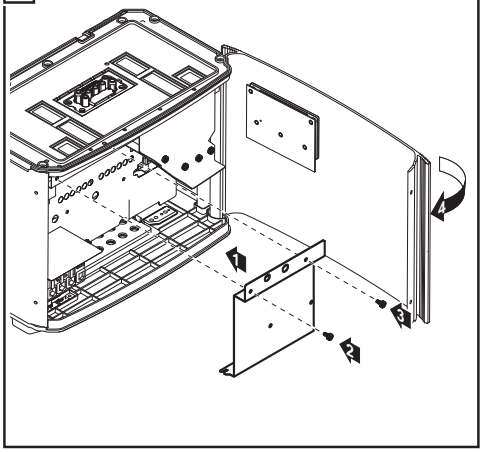

3

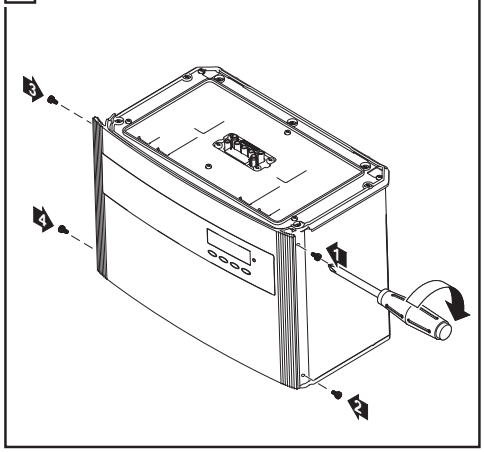

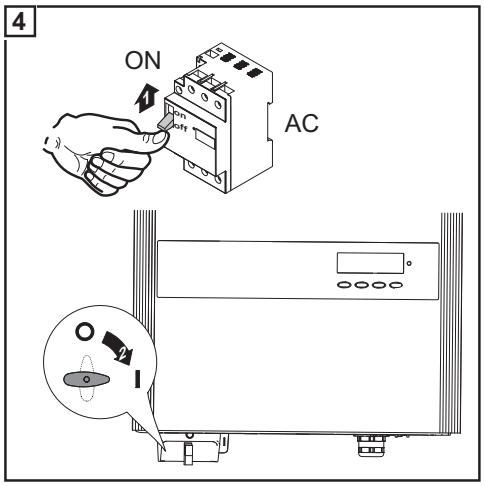
4
ON
AC
O
I

Replacing GFDI fuse

Safety

WARNING! An electric shock can be fatal. Danger from grid voltage and DC voltage from solar modules.

- The connection area should only be opened by a licensed electrician.
- Never work with live wires! Prior to all connection work, make sure that the AC and DC wires are not charged.
- The DC main switch is used only to switch off power to the power stage set. When the DC main switch is turned off, the connection area is still energized.

These servicing instructions are for use by qualified personnel only. To reduce the risk of electric shock, do not perform any servicing other than that specified in the operating instructions.

WARNING! An electric shock can be fatal. Danger from residual voltage from capacitors.

You must wait until the capacitors have discharged. Discharge takes 5 minutes.

WARNING! An electric shock can be fatal. Normally grounded conductors may be ungrounded and energized when a ground fault is indicated. The ground fault has to be repaired before operation is resumed.

Preparation

NOTE! Disconnect AC and DC supply from the inverter.

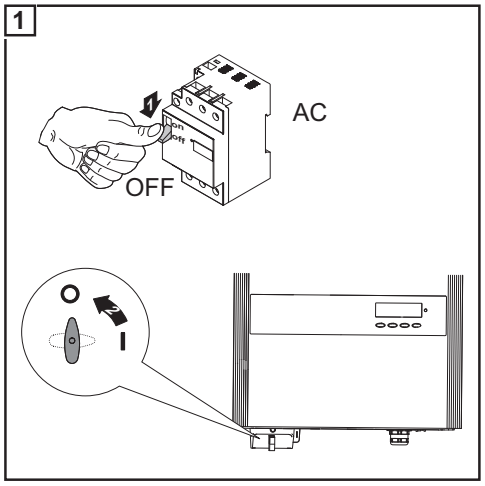

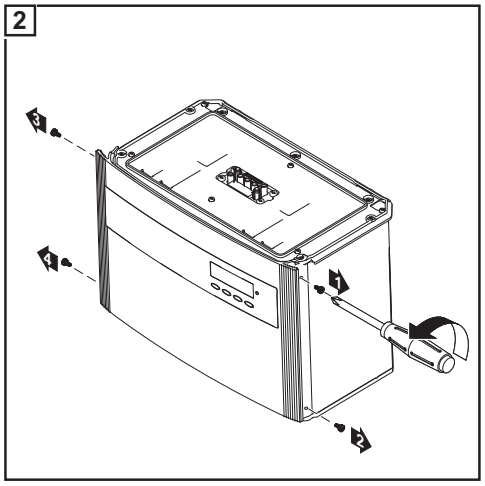

3

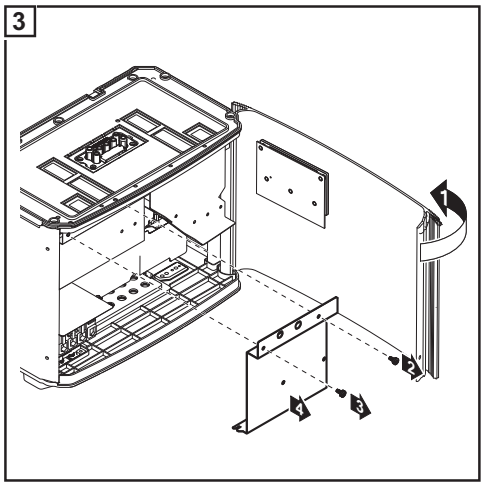

4 If present, disconnect data communication wire from the option cards.

Replacing GFDI fuse

WARNING! An electric shock can be fatal. Danger from DC voltage from solar modules.

- Never remove a fuse while it is under load.
- Fuse covers are for installation purposes only. They offer no protection against contact.

1 Test the fuse holder at the terminal for continuity

NOTE! Only use fuses that comply with the following data for the GFDI fuse:

Diameter 0.406 x 1.378 - 1.496 in. (10.3 x 35 - 38 mm), 1 A, 600 V DC

2

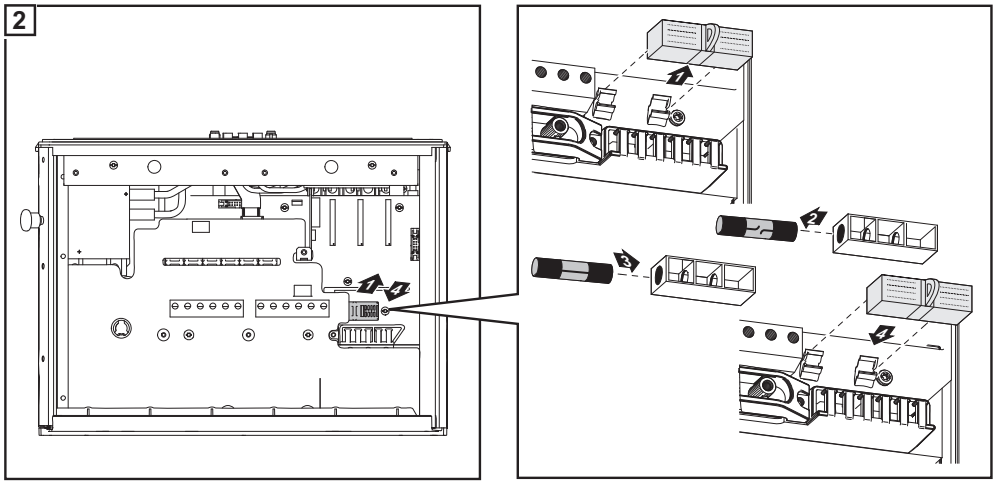

3 After replacing the fuse:

- Find out and correct the cause for the defective fuse

Finally...

1 Connect available data communication wire to the option cards.

IMPORTANT! Make sure that the plastic dividers are underneath any data communication wires that are present.

2

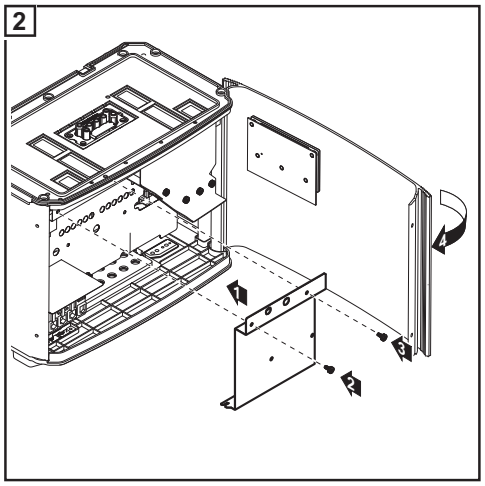

3

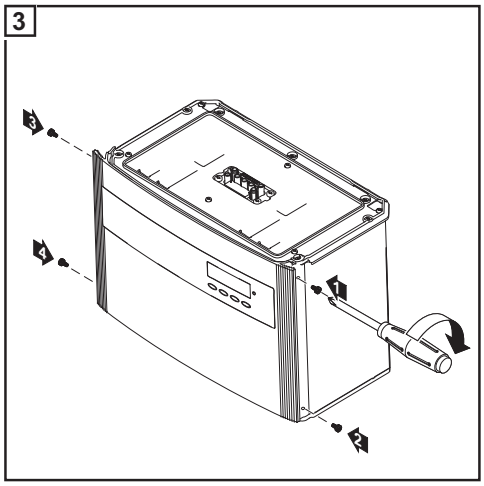

4

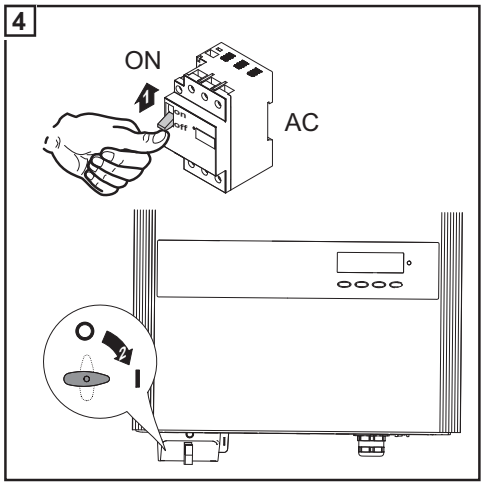

Appendix

Technical Data

SunPower SPR-3301f-1 UNI

Input data

Recommended PV power	2800 - 3800 Wp
MPP voltage range	230 - 500 V DC
Max. input voltage (at 1000 W/m² / 14 °C in an open circuit)	600 V DC
Nominal input voltage	390 V
Nominal input current	9.1 A
Max. input current	15.4 A
Max. array short circuit current	19.3 A

Output data

Nominal output power (Pnom)		3300 W
Pnom at +122 °F (50 °C)		3300 W
Max. output power		3300 W
Nominal AC output voltage		208 V / 240 V / 277 V
Grid voltage tolerance		+10 / -12 %
Operating AC voltage range default	at 208 V	183 - 229 V
	at 240 V	211 - 264 V
	at 277 V	244 - 305 V
Adjustment range for voltage	at 208 V	105 - 248 V
	at 240 V	121 - 287 V
	at 277 V	140 - 324 V
Voltage trip limit accuracy		1 % of nominal value
Voltage clearing times		0.016 - 4.25 s
Nominal output current	at 208 V	15.9 A AC
	at 240 V	13.8 A AC
	at 277 V	11.9 A AC
Number of phases		1
Maximum output current	at 208 V	18.0 A
	at 240 V	15.6 A
	at 277 V	13.5 A
Maximum continuous utility backfeed current *		0 A
Synchronization in-rush current *		0 A
Maximum output fault current / duration		346 A / 3.24 µs
Nominal output frequency		60 Hz
Operating frequency range		59.3 - 60.5 Hz

Adjustment range for frequency	57.0 - 60.48 Hz
Frequency trip limit accuracy	0.05 Hz
Frequency clearing times	0.016 - 300 s
Harmonic distortion	< 3 %
Power factor cos phi	1

* assured by electrical design of the inverter

General data

Maximum efficiency		96.2 %
CEC efficiency	at 208 V	95.5 %
	at 240 V	95.5 %
	at 277 V	96.0 %
Night consumption		< 1.5 W
Consumption during operation		8 W
Cooling		Controlled forced ventilation
Degree of protection		NEMA 3R
Unit dimensions w x h x d		17.09 x 26.50 x 9.84 in. 434 x 673 x 250 mm
Power stage set weight		31 lbs. 14 kg
Connection area weight		24 lbs. 11 kg
Shipping dimensions w x h x d		20.28 x 31.10 x 14.37 in. 515 x 790 x 365 mm
Shipping weight		59 lbs. 27 kg
Permissible ambient temperature (with 95% rel. humidity)		-4 °F - +131 °F - 20 °C - +55 °C
Zulässige Lagertemperatur (with 95% rel. humidity)		-4 °F - +149 °F - 20 °C - +65 °C

Safety equipment

Ground fault protection	internal GFDI (Ground Fault Detector/Interrupter)
Islanding protection	integrated
Protection against reverse polarity	integrated
Over temperature	output power derating / active cooling

SunPower SPR-3801f-1 UNI

Input data

Recommended PV power	3200 - 4400 Wp
MPP voltage range	230 - 500 V DC
Max. input voltage (at 1000 W/m² / 14 °C in an open circuit)	600 V DC
Nominal input voltage	390 V
Nominal input current	10.5 A
Max. input current	17.8 A
Max. array short circuit current	22.2 A

Output data

Nominal output power (P_{nom})		3800 W
P_{nom} at +122 °F (50 °C)		3800 W
Max. output power		3800 W
Nominal AC output voltage		208 V / 240 V / 277 V
Grid voltage tolerance		+10 / -12 %
Operating AC voltage range default,	at 208 V	183 - 229 V
	at 240 V	211 - 264 V
	at 277 V	244 - 305 V
Adjustment range for voltage,	at 208 V	105 - 248 V
	at 240 V	121 - 287 V
	at 277 V	140 - 324 V
Voltage trip limit accuracy		1 % of nominal value
Voltage clearing times		0.016 - 4.25 s
Nominal output current	at 208 V	18.3 A AC
	at 240 V	15.8 A AC
	at 277 V	13.7 A AC
Number of phases		1
Maximum output current	at 208 V	18.5 A
	at 240 V	18.0 A
	at 277 V	15.6 A
Maximum continuous utility backfeed current *		0 A
Synchronization in-rush current *		0 A
Maximum output fault current / duration		346 A / 3.24 µs
Nominal output frequency		60 Hz
Operating frequency range		59.3 - 60.5 Hz
Adjustment range for frequency		57.0 - 60.48 Hz
Frequency trip limit accuracy		0.05 Hz
Frequency clearing times		0.016 - 300 s
Harmonic distortion		< 3 %

Power factor cos phi	1

* assured by electrical design of the inverter

General data

Maximum efficiency		96.2 %
CEC efficiency	at 208 V	95.0 %
	at 240 V	95.5 %
	at 277 V	96.0 %
Night consumption		< 1.5 W
Consumption during operation		8 W
Cooling		Controlled forced ventilation
Degree of protection		NEMA 3R
Unit dimensions w x h x d		17.09 x 26.50 x 9.84 in. 434 x 673 x 250 mm
Power stage set weight		31 lbs. 14 kg
Connection area weight		24 lbs. 11 kg
Shipping dimensions w x h x d		20.28 x 31.10 x 14.37 in. 515 x 790 x 365 mm
Shipping weight		59 lbs. 27 kg
Permissible ambient temperature (with 95% rel. humidity)		-4 °F - +131 °F - 20 °C - +55 °C
Permissible storage temperature (with 95% rel. humidity)		-4 °F - +149 °F - 20 °C - +65 °C

Safety equipment

Ground fault protection	internal GFDI (Ground Fault Detector/Interrupter)
Islanding protection	integrated
Protection against reverse polarity	integrated
Over temperature	output power derating / active cooling

SunPower SPR-6501f-1 UNI

Input data

Recommended PV power	5500 - 7500 Wp
MPP voltage range	230 - 500 V DC
Max. input voltage (at 1000 W/m² / 14 °C in an open circuit)	600 V DC
Nominal input voltage	390 V
Nominal input current	17.9 A
Max. input current	30.4 A
Max. array short circuit current	38.0 A

Output data

Nominal output power (P_{nom})		6500 W
P_{nom} at +122 °F (50 °C)		6500 W
Max. output power		6500 W
Nominal AC output voltage		208 V / 240 V / 277 V
Grid voltage tolerance		+10 / -12 %
Operating AC voltage range default,	at 208 V	183 - 229 V
	at 240 V	211 - 264 V
	at 277 V	244 - 305 V
Adjustment range for voltage,	at 208 V	105 - 248 V
	at 240 V	121 - 287 V
	at 277 V	140 - 324 V
Voltage trip limit accuracy		1 % of nominal value
Voltage clearing times		0.016 - 4.25 s
Nominal output current	at 208 V	31.3 A AC
	at 240 V	27.1 A AC
	at 277 V	23.5 A AC
Number of phases		1
Maximum output current	at 208 V	35.5 A
	at 240 V	30.8 A
	at 277 V	26.6 A
Maximum continuous utility backfeed current *		0 A
Synchronization in-rush current *		0 A
Maximum output fault current / duration		462 A / 125 µs
Nominal output frequency		60 Hz
Operating frequency range		59.3 - 60.5 Hz
Adjustment range for frequency		57.0 - 60.48 Hz
Frequency trip limit accuracy		0.05 Hz
Frequency clearing times		0.016 - 300 s
Harmonic distortion		< 3 %

Power factor cos phi	1

* assured by electrical design of the inverter

General data

Maximum efficiency		96.2 %
CEC efficiency	at 208 V	95.0 %
	at 240 V	95.5 %
	at 277 V	96.0 %
Night consumption		< 1.5 W
Consumption during operation		14 W
Cooling		Controlled forced ventilation
Degree of protection		NEMA 3R
Unit dimensions w x h x d		17.09 x 38.11 x 9.84 in. 434 x 968 x 250 mm
Power stage set weight		57 lbs. 26 kg
Connection area weight		24 lbs. 11 kg
Shipping dimensions w x h x d		20.28 x 42.72 x 14.37 in. 515 x 1085 x 365 mm
Shipping weight		90 lbs. 41 kg
Permissible ambient temperature (with 95% rel. humidity)		-4 °F - +131 °F - 20 °C - +55 °C
Permissible storage temperature (with 95% rel. humidity)		-4 °F - +149 °F - 20 °C - +65 °C

Safety equipment

Ground fault protection	internal GFDI (Ground Fault Detector/Interrupter)
Islanding protection	integrated
Protection against reverse polarity	integrated
Over temperature	output power derating / active cooling

SunPower SPR-7501f-1 UNI

Input data

Recommended PV power	6350 - 8600 Wp
MPP voltage range	230 - 500 V DC
Max. input voltage (at 1000 W/m² / 14 °C in an open circuit)	600 V DC
Nominal input voltage	390 V
Nominal input current	20.7 A
Max. input current	35.1 A
Max. array short circuit current	43.8 A

Output data

Nominal output power (P_{nom})		7500 W
P_{nom} at +122 °F (50 °C)		7500 W
Max. output power		7500 W
Nominal AC output voltage		208 V / 240 V / 277 V
Grid voltage tolerance		+10 / -12 %
Operating AC voltage range default,	at 208 V	183 - 229 V
	at 240 V	211 - 264 V
	at 277 V	244 - 305 V
Adjustment range for voltage,	at 208 V	105 - 248 V
	at 240 V	121 - 287 V
	at 277 V	140 - 324 V
Voltage trip limit accuracy		1 % of nominal value
Voltage clearing times		0.016 - 4.25 s
Nominal output current	at 208 V	36.1 A AC
	at 240 V	31.3 A AC
	at 277 V	27.1 A AC
Number of phases		1
Maximum output current	at 208 V	37.0 A
	at 240 V	35.5 A
	at 277 V	30.7 A
Maximum continuous utility backfeed current *		0 A
Synchronization in-rush current *		0 A
Maximum output fault current / duration		462 A / 125 µs
Nominal output frequency		60 Hz
Operating frequency range		59.3 - 60.5 Hz
Adjustment range for frequency		57.0 - 60.48 Hz
Frequency trip limit accuracy		0.05 Hz
Frequency clearing times		0.016 - 300 s
Harmonic distortion		< 3 %

Power factor cos phi	1

* assured by electrical design of the inverter

General data

Maximum efficiency		96.2 %
CEC efficiency	at 208 V	95.0 %
	at 240 V	95.5 %
	at 277 V	96.0 %
Night consumption		< 1.5 W
Consumption during operation		14 W
Cooling		Controlled forced ventilation
Degree of protection		NEMA 3R
Unit dimensions w x h x d		17.09 x 38.11 x 9.84 in. 434 x 968 x 250 mm
Power stage set weight		57 lbs. 26 kg
Connection area weight		24 lbs. 11 kg
Shipping dimensions w x h x d		20.28 x 42.72 x 14.37 in. 515 x 1085 x 365 mm
Shipping weight		90 lbs. 41 kg
Permissible ambient temperature (with 95% rel. humidity)		-4 °F - +131 °F - 20 °C - +55 °C
Permissible storage temperature (with 95% rel. humidity)		-4 °F - +149 °F - 20 °C - +65 °C

Safety equipment

Ground fault protection	internal GFDI (Ground Fault Detector/Interrupter)
Islanding protection	integrated
Protection against reverse polarity	integrated
Over temperature	output power derating / active cooling

SunPower SPR-10001f-1 UNI

Input data

Recommended PV power	8500 - 11500 Wp
MPP voltage range	230 - 500 V DC
Max. input voltage (at 1000 W/m² / 14 °C in an open circuit)	600 V DC
Nominal input voltage	390 V
Nominal input current	27.6 A
Max. input current	46.8 A
Max. array short circuit current	58.4 A

Output data

Nominal output power (P_{nom})		10000 W
P_{nom} at +122 °F (50 °C)		10000 W
Max. output power		10000 W
Nominal AC output voltage		208 V / 240 V / 277 V
Grid voltage tolerance		+10 / -12 %
Operating AC voltage range default,	at 208 V	183 - 229 V
	at 240 V	211 - 264 V
	at 277 V	244 - 305 V
Adjustment range for voltage,	at 208 V	105 - 248 V
	at 240 V	121 - 287 V
	at 277 V	140 - 324 V
Voltage trip limit accuracy		1 % of nominal value
Voltage clearing times		0.016 - 4.25 s
Nominal output current	at 208 V	48.1 A AC
	at 240 V	41.7 A AC
	at 277 V	36.1 A AC
Number of phases		1
Maximum output current	at 208 V	54.6 A
	at 240 V	47.4 A
	at 277 V	41.0 A
Maximum continuous utility backfeed current *		0 A
Synchronization in-rush current *		0 A
Maximum output fault current / duration		193 A / 247 µs
Nominal output frequency		60 Hz
Operating frequency range		59.3 - 60.5 Hz
Adjustment range for frequency		57.0 - 60.48 Hz
Frequency trip limit accuracy		0.05 Hz
Frequency clearing times		0.016 - 300 s
Harmonic distortion		< 3 %

Power factor cos phi	1

* assured by electrical design of the inverter

General data

Maximum efficiency		96.2 %
CEC efficiency	at 208 V at 240 V at 277 V	95.0 % 95.5 % 96.0 %
Night consumption		< 1.5 W
Consumption during operation		20 W
Cooling		Controlled forced ventilation
Degree of protection		NEMA 3R
Unit dimensions w x h x d		17.09 x 49.72 x 9.84 in. 434 x 1263 x 250 mm
Power stage set weight		84 lbs. 38 kg
Connection area weight		26 lbs. 12 kg
Shipping dimensions w x h x d		20.28 x 42.72 x 14.37 in. 515 x 1085 x 365 mm + 20.28 x 16.14 x 14.37 in. 515 x 410 x 365 mm
Shipping weight		114 lbs. 25 kg
Permissible ambient temperature (with 95% rel. humidity)		-4 °F - +131 °F - 20 °C - +55 °C
Permissible storage temperature (with 95% rel. humidity)		-4 °F - +149 °F - 20 °C - +65 °C

Safety equipment

Ground fault protection	internal GFDI (Ground Fault Detector/Interrupter)
Islanding protection	integrated
Protection against reverse polarity	integrated
Over temperature	output power derating / active cooling

SunPower SPR-11401f-1 UNI

Input data

Recommended PV power	9700 - 13100 Wp
MPP voltage range	230 - 500 V DC
Max. input voltage (at 1000 W/m² / 14 °C in an open circuit)	600 V DC
Nominal input voltage	390 V
Nominal input current	31.4 A
Max. input current	53.3 A
Max. array short circuit current	66.6 A

Output data

Nominal output power (P_{nom})		11400 W
P_{nom} at +122 °F (50 °C)		11400 W
Max. output power		11400 W
Nominal AC output voltage		208 V / 240 V / 277 V
Grid voltage tolerance		+10 / -12 %
Operating AC voltage range default,	at 208 V	183 - 229 V
	at 240 V	211 - 264 V
	at 277 V	244 - 305 V
Adjustment range for voltage,	at 208 V	105 - 248 V
	at 240 V	121 - 287 V
	at 277 V	140 - 324 V
Voltage trip limit accuracy		1 % of nominal value
Voltage clearing times		0.016 - 4.25 s
Nominal output current	at 208 V	54.8 A AC
	at 240 V	47.5 A AC
	at 277 V	41.2 A AC
Number of phases		1
Maximum output current	at 208 V	55.5 A
	at 240 V	54.0 A
	at 277 V	46.7 A
Maximum continuous utility backfeed current *		0 A
Synchronization in-rush current *		0 A
Maximum output fault current / duration		193 A / 247 µs
Nominal output frequency		60 Hz
Operating frequency range		59.3 - 60.5 Hz
Adjustment range for frequency		57.0 - 60.48 Hz
Frequency trip limit accuracy		0.05 Hz
Frequency clearing times		0.016 - 300 s
Harmonic distortion		< 3 %

Power factor cos phi	1

* assured by electrical design of the inverter

General data

Maximum efficiency		96.2 %
CEC efficiency	at 208 V at 240 V at 277 V	95.0 % 95.5 % 96.0 %
Night consumption		< 1.5 W
Consumption during operation		20 W
Cooling		Controlled forced ventilation
Degree of protection		NEMA 3R
Unit dimensions w x h x d		17.09 x 49.72 x 9.84 in. 434 x 1263 x 250 mm
Power stage set weight		84 lbs. 38 kg
Connection area weight		26 lbs. 12 kg
Shipping dimensions w x h x d		20.28 x 42.72 x 14.37 in. 515 x 1085 x 365 mm + 20.28 x 16.14 x 14.37 in. 515 x 410 x 365 mm
Shipping weight		114 lbs. 25 kg
Permissible ambient temperature (with 95% rel. humidity)		-4 °F - +131 °F - 20 °C - +55 °C
Permissible storage temperature (with 95% rel. humidity)		-4 °F - +149 °F - 20 °C - +65 °C

Safety equipment

Ground fault protection	internal GFDI (Ground Fault Detector/Interrupter)
Islanding protection	integrated
Protection against reverse polarity	integrated
Over temperature	output power derating / active cooling

SunPower SPR-11401f-3-208/240 Delta

Input data

Recommended PV power	9700 - 13100 Wp
MPP voltage range	230 - 500 V DC
Max. input voltage (at 1000 W/m² / 14 °C in an open circuit)	600 V DC
Nominal input voltage	390 V
Nominal input current	31.4 A
Max. input current	53.3 A
Max. array short circuit current	66.6 A

Output data

Nominal output power (P_{nom})		11400 W
P_{nom} at +122 °F (50 °C)		11400 W
Max. output power		11400 W
Nominal AC output voltage		208 V / 240 V
Grid voltage tolerance		+10 / -12 %
Operating AC voltage range default,	at 208 V at 240 V	183 - 229 V 211 - 264 V
Adjustment range for voltage,	at 208 V at 240 V	105 - 248 V 121 - 287 V
Voltage trip limit accuracy		1 % of nominal value
Voltage clearing times		0.016 - 4.25 s
Nominal output current	at 208 V at 240 V	31.6 A AC 27.4 A AC
Number of phases		3
Maximum output current	at 208 V at 240 V	32.0 A 31.2 A
Maximum continuous utility backfeed current *		0 A
Synchronization in-rush current *		0 A
Maximum output fault current / duration		324 A / 1.16 ms
Nominal output frequency		60 Hz
Operating frequency range		59.3 - 60.5 Hz
Adjustment range for frequency		57.0 - 60.48 Hz
Frequency trip limit accuracy		0.05 Hz
Frequency clearing times		0.016 - 300 s
Harmonic distortion		< 3 %
Power factor cos phi		1

* assured by electrical design of the inverter

General data

Maximum efficiency		96.2 %
CEC efficiency	at 208 V at 240 V	95.0 % 96.0 %
Night consumption		< 1.5 W
Consumption during operation		20 W
Cooling		Controlled forced ventilation
Degree of protection		NEMA 3R
Unit dimensions w x h x d		17.09 x 49.72 x 9.84 in. 434 x 1263 x 250 mm
Power stage set weight		84 lbs. 38 kg
Connection area weight		26 lbs. 12 kg
Shipping dimensions w x h x d		20.28 x 42.72 x 14.37 in. 515 x 1085 x 365 mm + 20.28 x 16.14 x 14.37 in. 515 x 410 x 365 mm
Shipping weight		114 lbs. 25 kg
Permissible ambient temperature (with 95% rel. humidity)		-4 °F - +131 °F - 20 °C - +55 °C
Permissible storage temperature (with 95% rel. humidity)		-4 °F - +149 °F - 20 °C - +65 °C

Safety equipment

Ground fault protection	internal GFDI (Ground Fault Detector/Interrupter)
Islanding protection	integrated
Protection against reverse polarity	integrated
Over temperature	output power derating / active cooling

SunPower SPR-12001f-3-277 WYE

Input data

Recommended PV power	10200 - 13800 Wp
MPP voltage range	230 - 500 V DC
Max. input voltage (at 1000 W/m² / 14 °C in an open circuit)	600 V DC
Nominal input voltage	390 V
Nominal input current	33.1 A
Max. input current	56.1 A
Max. array short circuit current	70.1 A

Output data

Nominal output power (P_{nom})		12000 W
P_{nom} at +122 °F (50 °C)		12000 W
Max. output power		12000 W
Nominal AC output voltage		277 V
Grid voltage tolerance		+10 / -12 %
Operating AC voltage range default,	at 277 V	244 - 305 V
Adjustment range for voltage,	at 277 V	140 - 324 V
Voltage trip limit accuracy		1 % of nominal value
Voltage clearing times		0.016 - 4.25 s
Nominal output current	at 277 V	14.4 A AC
Number of phases		3
Maximum output current	at 277 V	16.4 A
Maximum continuous utility backfeed current *		0 A
Synchronization in-rush current *		0 A
Maximum output fault current / duration		504 A / 3.26 ms
Nominal output frequency		60 Hz
Operating frequency range		59.3 - 60.5 Hz
Adjustment range for frequency		57.0 - 60.48 Hz
Frequency trip limit accuracy		0.05 Hz
Frequency clearing times		0.016 - 300 s
Harmonic distortion		< 3 %
Power factor		1

* assured by electrical design of the inverter

General data

Maximum efficiency		96.2 %
CEC efficiency	at 277 V	96.0 %
Night consumption		< 1.5 W
Consumption during operation		20 W
Cooling		Controlled forced ventilation
Degree of protection		NEMA 3R
Unit dimensions w x h x d		17.09 x 49.72 x 9.84 in. 434 x 1263 x 250 mm
Power stage set weight		84 lbs. 38 kg
Connection area weight		26 lbs. 12 kg
Shipping dimensions w x h x d		20.28 x 42.72 x 14.37 in. 515 x 1085 x 365 mm + 20.28 x 16.14 x 14.37 in. 515 x 410 x 365 mm
Shipping weight		114 lbs. 25 kg
Permissible ambient temperature (with 95% rel. humidity)		-4 °F - +131 °F - 20 °C - +55 °C
Permissible storage temperature (with 95% rel. humidity)		-4 °F - +149 °F - 20 °C - +65 °C

Safety equipment

Ground fault protection	internal GFDI (Ground Fault Detector/Interrupter)
Islanding protection	integrated
Protection against reverse polarity	integrated
Over temperature	output power derating / active cooling

Field adjustable trip points

Field adjustable trip points	208 V	240 V	277 V
Nominal AC output voltage, Line-to-Line, [V]	208	240	277
Operating AC voltage range default, Line-to-Line, [V]	183-229	211-264	-
Adjustment range for voltage, Line-to-Line, [V]	105-248	121-287	-
Voltage trip limit accuracy Line-to-Line, [% of nominal value]	1	1	-
Operating AC voltage range default, Line-to-Neutral, [V]	106-132	106-132	244-305
Adjustment range for voltage, Line-to-Neutral, [V]	61-143	61-143	138-324
Adjustment range for voltage clearing time [s]	0.016-4.25	0.016-4.25	0.016-4.25
Voltage trip limit accuracy Line-to-Neutral, [% of nominal value]	1	1	1
Nominal output frequency [Hz]	60	60	60
Operating frequency range [Hz]	59.3-60.5	59.3-60.5	59.3-60.5
Adjustment range for frequency [Hz]	57.0-60.48	57.0-60.48	57.0-60.48
Adjustment range for frequency clearing time [s]	0.016-300	0.016-300	0.016-300
Frequency trip limit accuracy [ms]	16.66 (1)	16.66 (1)	16.66 (1)
Detection time [ms]	25 (2)	25 (2)	25 (2)
Reconnect time default [s]	300	300	300
Adjustment range for reconnect time [s]	5-900	5-900	5-900

(1) 16.66 ms are equivalent to 1 cycle

(2) 25 ms are equivalent to 1.5 cycles

Relevant Standards and Directives

Relevant standards and directives

- UL 1741-2005
- IEEE 1547-2003
- IEEE 1547.1
- ANSI/IEEE C62.41
- FCC Part 15 A & B
- NEC Article 690
- C22. 2 No. 107.1-01 (September 2001)

Grid Failure

The standard measurement and safety procedures integrated into the inverter ensure that the power feed is immediately interrupted in the event of a grid failure (shut-off by the utility or damage to lines).

CSA INTERNATIONAL

Certificate of Compliance

Certificate: 2107866 **Master Contract:** 245329

Project: 2107866 **Date Issued:** November 28, 2008

Issued to: **SunPower Corporation**
3939 North First Street
San Jose, CA 95134
USA
Attention: Ms. Connie Kwan

The products listed below are eligible to bear the CSA Mark shown with adjacent indicator 'US'

US

Issued by: Jocelyn Jens
Technical Assistant

Authorized by: Terry Nagy
Operations Manager

PRODUCTS

CLASS 5311 89 - POWER SUPPLIES - Distributed Generation - Power Systems Equipment (Certified to U.S. Standards)

Utility Interactive Inverter, Models SunPower SPR-3300f, SunPower SPR-4000f, SunPower SPR-6500f, SunPower SPR-8000f, SunPower SPR-12000f, permanently connected, system ratings as follows:

The 'C' and 'US' indicators adjacent to the CSA Mark signify that the product has been evaluated to the applicable CSA and ANSI/UL Standards, for use in Canada and the U.S., respectively. This 'US' indicator includes products eligible to bear the 'NRTL' indicator. NRTL, i.e. National Recognized Testing Laboratory, is a designation granted by the U.S. Occupational Safety and Health Administration (OSHA) to laboratories which have been recognized to perform certification to U.S. Standards.

DQD 507 Rev. 2004-06-30



SunPower Corporation
3939N. First Street
San Jose, California 95134, USA
Tel 1-800-SUNPOWER (1-800-786-7693)
Fax 408.877.1808
DMS # 001-67202 Rev.**