/ SBSE8.0-9.9-ISP-xx-11 | Version 1.1

SUNNY BOY SMART ENERGY

SBSE8.0-50 / SBSE9.9-50

eManual

1

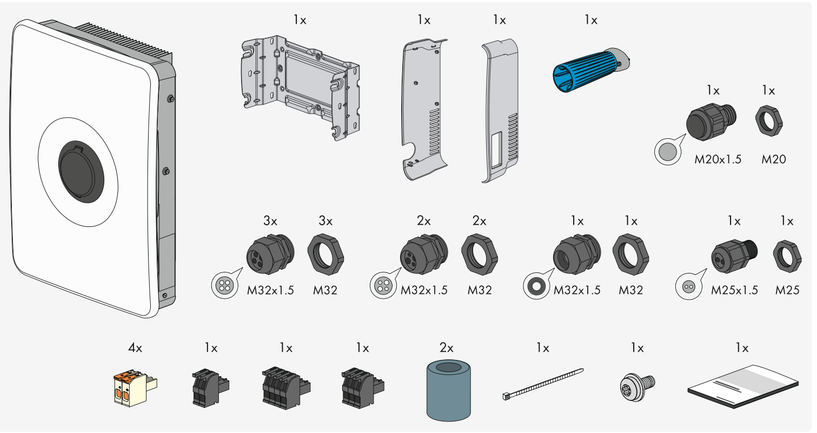

2

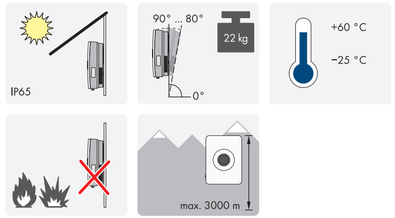

3

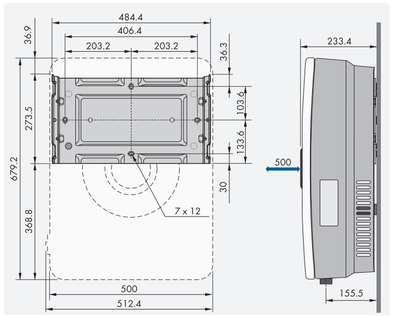

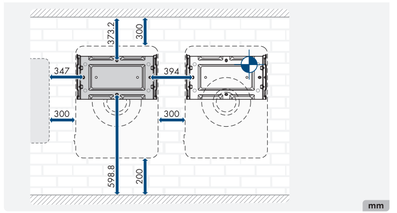

3

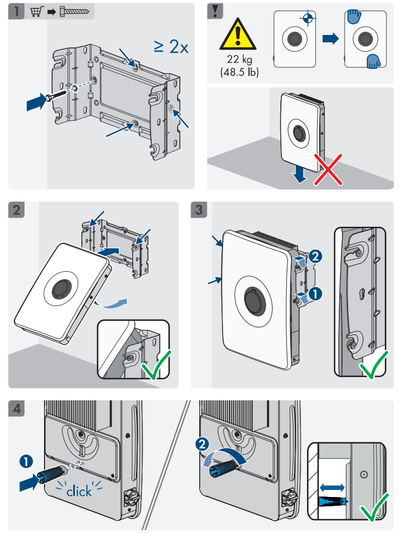

4 AC

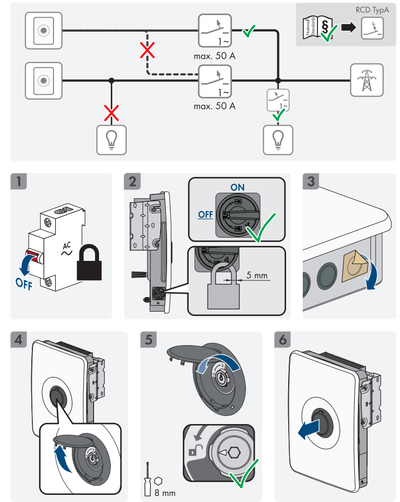

4 AC

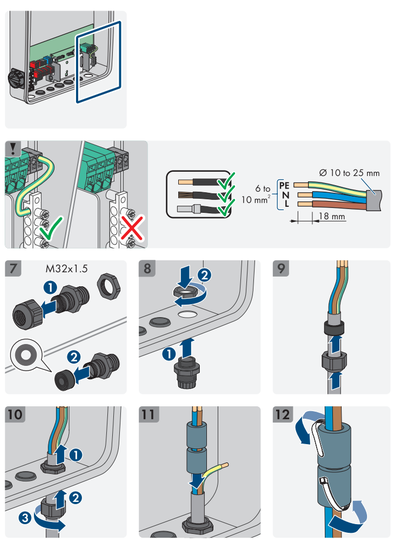

4 AC

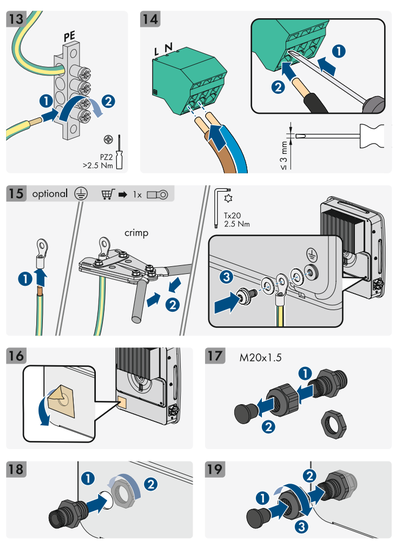

4 AC

	SBSE8.0-50	SBSE9.9-50
$P_{AC\ (@\ 230\ V,\ 50\ Hz)}$	8kW	9,9kW
$S_{(@\ \cos\varphi\ =\ 1)}$	8kVA	9,9kVA
$V_{AC,\ r}$	230 V / 240 V	
$V_{AC,\ range}$	184 V to 253 V / 192 V to 264 V	
$I_{AC,\ max\ (@\ 230\ V)}$	34,8 A	43,0 A
f_{AC}	50 Hz / 60 Hz	
cos φ	1 / 0.0 overexcited to 0.0 underexcited	

5 AC + ⏻

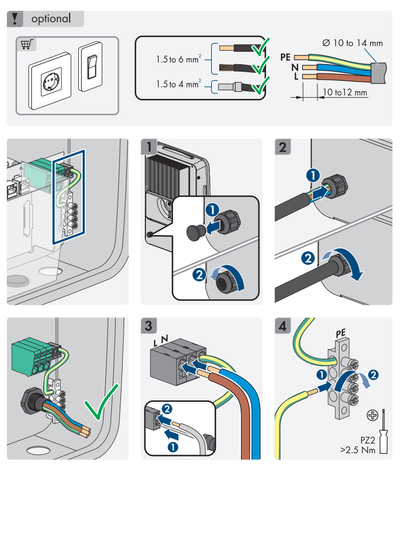

5 AC + ⏻

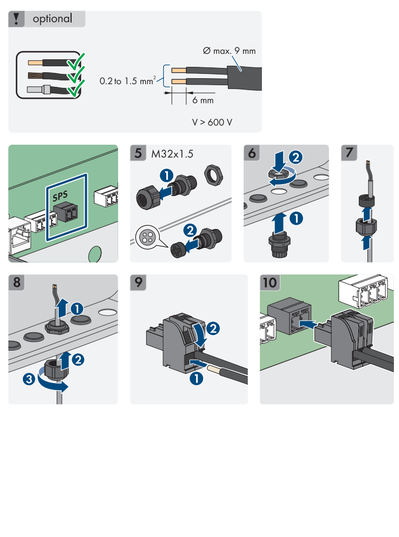

6

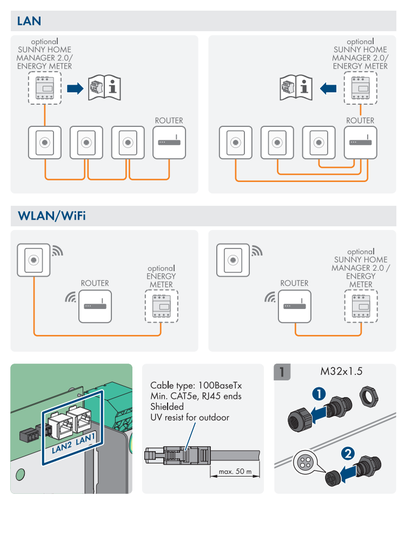

6

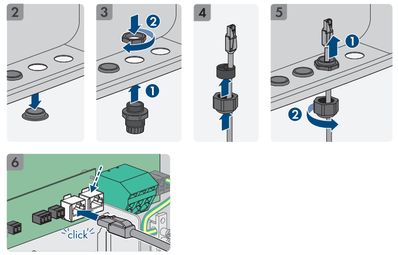

7 COM

optional

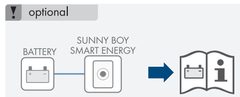

Approved Batteries

Cable type: 100BaseTx
Min. CAT5e, RJ45 ends
Shielded
UV resist for outdoor

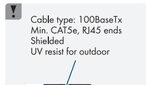



7	5	4	2
BAT_EN	CAN_L	CAN_H	EN_GND

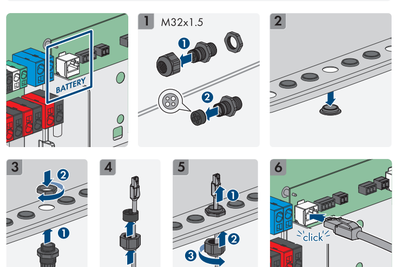

8 DC

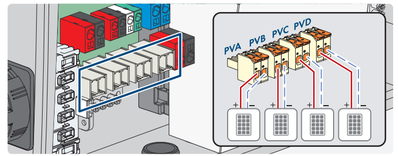

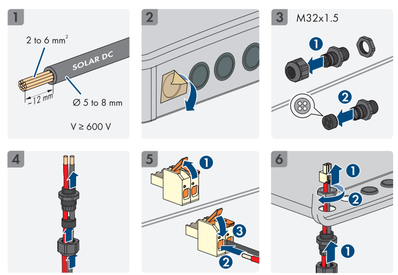

8 DC

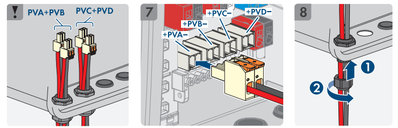

	SBSE8.0-50	SBSE9.9-50
Max. generator power	16000Wp	19800Wp
$V_{DC, max}$	600 V	
$V_{DC, MPP}$	60 V to 480 V	
$V_{DC, Initial input}$	66 V	
$I_{DC, max usable input A / B / C / D}$	15 A	
$I_{SC PV max, input A / B / C / D}$	30 A	
$I_{SC PV max, all inputs}$	90 A	

9 DC

optional



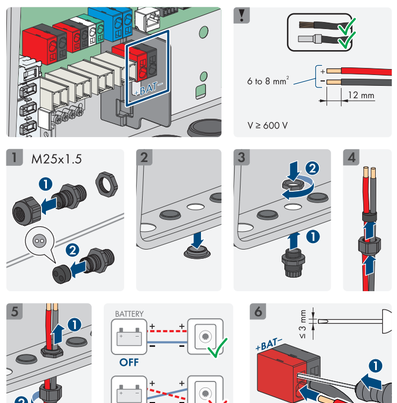

9 DC

Type	Li-ion battery
$V_{DC, max}$	500 V
$V_{DC, min}$	90 V
$I_{DC, max}$	30 A

10 ON

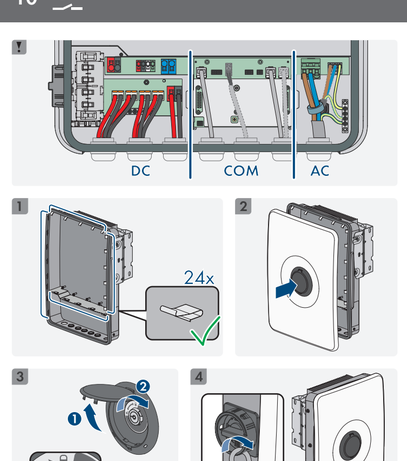

10 ON

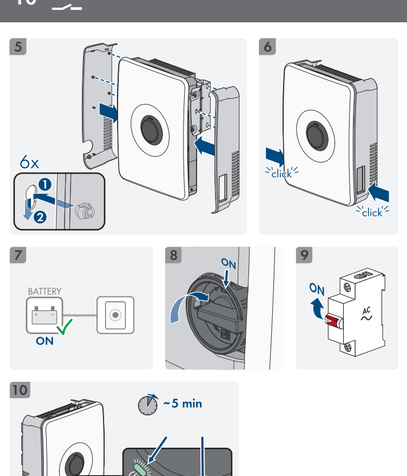

11

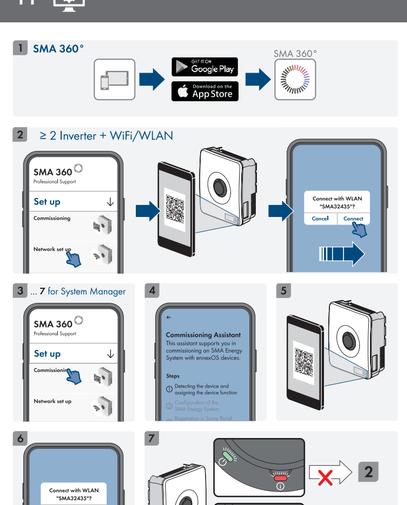

12 System data

Topology	no galvanic isolation
Overvoltage category in accordance with IEC 60664-1	II (DC), III (AC)
Protection class in accordance with IEC 61140	I
All-pole sensitive residual-current monitoring unit	integrated
Maximum permissible value for relative humidity, condensing	100 %
Extended humidity range according to IEC 60721-3-4	0 % to 100 %
Pollution degree inside the enclosure	2
Pollution degree outside the enclosure	3

13

https://go.sma.de/service