Sunny Island

Installation & Operating Instructions

Version 2.1

Bidirectional Battery Inverter SI3300

for Stand-alone Applications

BWRI33-12:EE1203

Alteration Review

Document number BWRI33	**Issue and type of alteration [1])**		**Comments**	**Author**
-01:EE1502	1.0	A	Translation of German issue 1.3	Wollny
-01:EE3002	1.1	A	Translation of chapter 14	Wollny
-01:EE3302	1.2	A	Final English translation	Wollny
-12:EE1203	2.1	A,C	Changes due to Firmware Version 1.50	Sabban

[1]) A: Changes due to faulty documents or improvement of the documentation

B: Changes maintaining full or upward compatibility

C: Changes limiting or excluding compatibility

	Name	**Date**	**Signature**
Approved	Wollny		

Explanation of Symbols used in this Document

To enable optimal usage of this manual and safe operation of the device during installation, operation and maintenance routines, please note the following description of symbols:



This indicates a feature that is important either for optimal and comfortable usage or optimal operation of the system.

Example: “To keep string voltage low we recommend the following procedure.”



This indicates a fact or feature which is very important for the safety of the user and / or which can cause a serious defect if not applied appropriately.

Example: ”Disconnect the mains plug before opening the case!“



This indicates an example.

Contents

1 Introduction 9
1.1 About these instructions 10
1.2 What to do in case of transport damages? 10
1.3 General Safety Instructions 11
2 System Description 12
2.1 Modularly Structured Power Supply Systems 12
2.2 Functional Design of the Sunny Island 13
3 Installation 15
3.1 Mounting Accessories Included in Delivery 15
3.2 Placement of the Sunny Island 16
3.3 Electric Connection 20
3.3.1 Preparing the Connection 21
3.3.2 Cable Connections 22
3.4 Examples for Connection 24
3.4.1 Connection to Ground 25
3.4.2 Connection of the battery 26
3.4.3 Connection of Battery Temperature Sensor 28
3.4.4 Connection to AC Voltage 29
3.4.5 Connection to Generator Current and Voltage Measurement 30
3.4.6 Connection of a Generator 31
3.4.7 Connection to an External Utility 34
3.4.8 Connection to Generator and Utility 37
3.4.9 Connection of a Battery Room Fan and Electrolyte Pump 39
3.4.10 Connection of a Dump Load 40

3.5 Finalization of Electrical Wiring 42
3.6 Interfaces for Communication 43
3.6.1 Assignment of COM1 Interface (Three-Phase Operation) 44
3.6.2 Assignment of COM2 Interface 45
3.7 Connection with Sunny Boy and Sunny Boy Control 46
3.7.1 Simple Connection at COM2 Interface 46
3.7.2 Multiple Connection at COM2 Interface 48
3.7.3 Simple Connection to PC 48
3.7.4 Alternative Communication at COM1 Interface 49
3.7.5 Assignment of COM3 Interface 50
3.8 Communication in a Three-Phase Island Grid 51
4 Operating Instructions 52
4.1 Display and Operating Elements 52
4.1.1 Key Assignment 53
4.1.2 Contrast in Display 53
4.1.3 Return to Status Display 54
4.1.4 Edit Mode 54
4.2 Menu Structure 55
5 First Commissioning of the Sunny Island 58
6 Configuration 61
6.1 First Configuration (“New System“) 62
6.2 Configuration after Battery Exchange (“New Battery“) 66
6.3 Configuration after Restart (“Restart”) 68
7 Operation (OPERAT) 69
7.1 Menu “START” (2-1), Operation of the Sunny Island 70
7.2 Menu “GENSET” (2-2), Operation of Generator 71

7.3 Menu “FUNCT“ (2+3), Special Functions 73
7.4 Menu „BHKW“ (2+5), ecopower support 73
8 Settings (SETUP) 75
8.1 Menu “SETTIM“ (3-1), Setting the System Clock 76
8.2 Menu “PASSWD“ (3-2), Entry of Password 77
8.3 Menu “PARSYS“ (3+3), Parameters System 78
8.4 Menu “PARGRD“ (3+4), Parameters Grid 79
8.5 Menu “PARBAT“ (3+5), Parameters Battery 81
8.6 Menu “PARGEN“ (3+6), Parameters Generator 84
8.7 Menu “PARREL“ (3+7), Parameters Relays 89
8.8 Menu “PARSB“ (3+8), Parameters Sunny Boy 95
8.9 Menu “PARALL“ (3+9), all Parameters 96
9 Operating Data (DATA) 97
9.1 Menu „DATAV“ (1-0), Overview of Measured Values 99
9.2 Menu “DATSYS“ (1-1), System Data 100
9.3 Menu “DATALL“ (1-2), Overall Plant Data 100
9.4 Menu “DATBAT“ (1+3), Battery Data 101
9.5 Menu “DATGRD“ (1+4), Grid Data 104
10 Diagnosis (DIAG) 106
10.1 Menu “ACKN“ (4-1), Error Confirmation 108
10.2 Menu “HISTOR“ (4-2), Overall Protocol 108
10.3 Menu “ERRHIS“ (4-3), Error Protocol 109
10.4 Menu “EVTHIS“ (4-4), State Protocol 109
11 Battery Management 110
11.1 Charging Methods 111
11.2 Battery States 112

11.3 Failure of Individual Cells 115
12 Operating Modes 116
12.1 Grid-Forming Operation (RUN_U) 116
12.2 Grid-Tied Operation (RUN_I) 118
12.3 Overload Behavior 119
13 Island Grids – Examples 121
13.1 Single-Phase PV Island Grid with Generator 121
13.2 Single-Phase PV Island Grid without Generator 124
13.3 Single-Phase PV Island Grid with Generator and Utility 126
13.4 Three-Phase PV Island Grid with Generator 128
14 Overview: Configurable System Parameters 130
15 Overview: Measured Values Displayed 146
16 Terminal Diagrams for Generator Options 152
17 Error and Status Signals 158
17.1 Error Signals 158
17.2 Status Signals (“Events“) 160
18 Technical Data 163
19 Servicing and Maintenance 166
20 Warranty and Liability Regulations 169
21 Declaration of Conformity 171
22 Contact 172
23 List of Figures 173
24 List of Tables 178



Important Safety Notice:

The Sunny Island inverter may only be opened, installed and serviced by qualified personnel. The device can still be charged with very high hazardous voltages even when disconnected. Please closely follow all steps as described in this document when working on the inverter.

1 Introduction

By purchasing a Sunny Island you have decided to use one of the most advanced modular battery inverters. The Sunny Island complies with the according European harmonized standards on electromagnetic compatibility as certified in the CE declaration (see appendix).

In the following you will find the installation and operating instructions of the Sunny Island battery inverter. Don’t worry about the size of the document, it is not necessary to read everything at once. This is both installer’s guide and user manual, so it is used as reference for the commissioning and as guideline on how to use all functions of the inverter optimally and how to extend your existing PV-plant. For detailed information on system realization, functions and the integrated battery and load management please refer to the Product Description.

1.1 About these instructions

This document contains important information for the installation and commissioning of the Sunny Island as well as its safe operation. Please read these instructions carefully before starting the inverter. The inverter must be installed and commissioned by qualified personnel. Work must be carried out according to the local installation and safety regulations. Please also refer to our warranty and liability terms at the end of this document.

This version of Installation and Operating Instructions considers the new features of Firmware BFR 1.50 / DSP 1.50 and higher. Basically, these Instructions continue to refer to inverters with firmware BFR 1.10, however discrepancies concerning the parameters/data available can arise. Please note that changes have been made compared to earlier versions (before Firmware BFR 1.10) as regards generator control (allocation of relays), (see chapter 3.4.6).

1.2 What to do in case of transport damages?

Our products are thoroughly checked before they are shipped. Even though they are delivered in sturdy packaging (which can be recycled) the inverters can be damaged in transit which is usually the forwarder's fault.

Please inspect your inverter thoroughly after it has been delivered. If any damages can be detected on the packaging that could make you conclude the contents is damaged or if you detect any damage please immediately notify the forwarding company.

SMA or your local supplier can help you in this matter. In any case a declaration of transport damage must be made within six days upon receipt of the product and must be stated in writing directly to the forwarding agent.

1.3 General Safety Instructions



The Sunny Island is only suitable for installation in closed rooms. Therefore do not expose it to humidity, rain or direct sunlight.

The inverter is designed for use in places up to 2000 m (6561 ft) above sea-level.

Make sure there is sufficient air circulation in the battery room. Batteries can develop an explosive gas mixture in normal operation.

Use specialized tools when mounting and wiring the storage battery (risk of short circuit).

As a precaution against injuries wear suitable clothes for handling heavy and unwieldy devices when mounting and removing the Sunny Island (such as working gloves and safety shoes).

The device may only be opened, installed and serviced by a qualified electrician. Even when disconnected there can be high touch voltages within the device. Please see our detailed description of how to handle the Sunny Island and closely follow all instructions!

Under certain circumstances the Sunny Island may start up autonomously! Keep this in mind when working on the island grid and always switch off the AC fuses of all Sunny Islands in the island grid!

2 System Description

2.1 Modularly Structured Power Supply Systems

The supply of small decentralized consumers which cannot be connected to a public grid is of large relevance world-wide, particularly in developing and threshold countries. This is an almost ideal application for isolated “off grid“ photovoltaic power supply systems. Experience with such systems in an output range of 2-10 kW has shown that they should not only be very reliable, economical and robust, but above all modularly structured and therefore easily expandable later on. Only a simply structured and flexible system design for these PV power supply systems will enable widespread application.

The central component of such a modular power supply system is the battery inverter Sunny Island®. Intelligent system management and control not only allow to supply different consumers, but also to connect the SMA Sunny Boy® String Inverters for supplementary grid feeding. The connection of small wind energy converters or diesel generator sets will also be possible.

On the AC voltage side the battery inverter must take over the complex control of voltage, reactive power and frequency as well as power management and uses the battery as a buffer.

On the DC voltage side the battery inverter makes sure to provide a best possible battery handling. To this end it ensures that the temperature-dependent and current-dependent voltage limits are complied with, full charge cycles are run regularly and the charging methods are adapted to the battery type and the specific ambient conditions.

Using this system-compatible battery inverter lets you reduce planning, execution and system costs for PV island supply considerably.

2.2 Functional Design of the Sunny Island

The bi-directional Sunny Island consists of a Cuk DC/DC converter, an inverter and a control and system management.

The DC/DC converter supplies the DC link circuit with an app. constant 380 V DC. Electric energy can charge the battery and can be extracted from the battery as well.

The inverter consists of a full bridge and provides sinusoidal output voltage through a filter. It can be operated in all four quadrants.

For control and management of the battery inverter it has a double processor concept with a closed loop control processor (DSP, digital signal processor) and a management system processor. The system management processor performs overall control, data acquisition and communication. The power unit is mainly controlled by the DSP.

Fig. 2.1 shows the three basic components of the battery inverter.

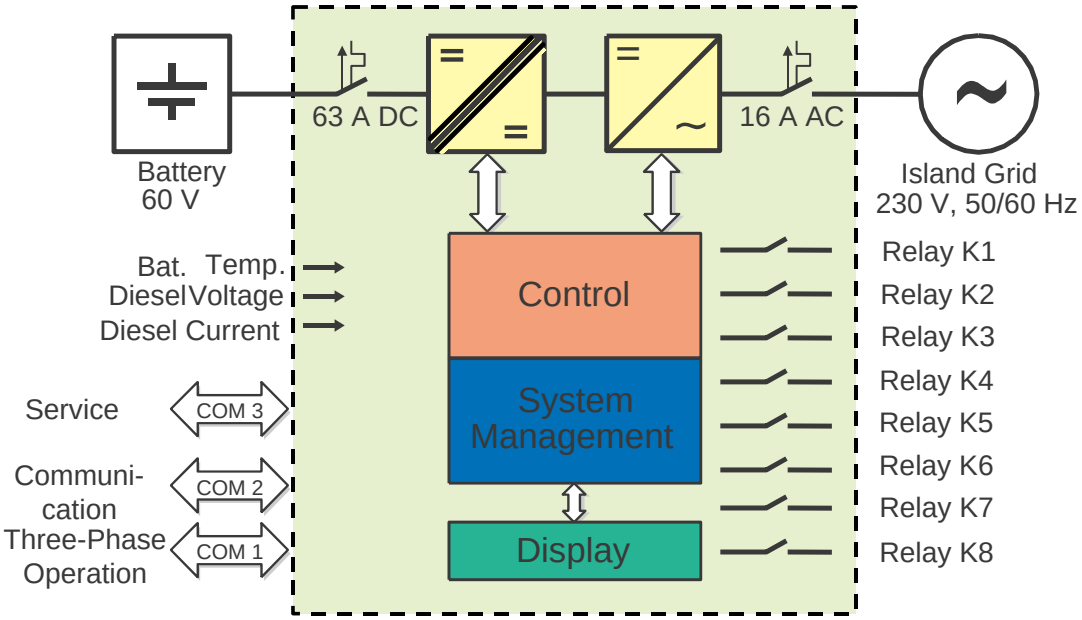

Fig. 2.1: Components of the battery inverter

The purpose of the power unit control is to tune output voltage during inverter operation into sinus-shape to guarantee constant supply to consumers.

In inverter operation grid voltage is controlled to 230 V / 50 Hz or 60 Hz. The system management can define other rms voltage values depending on the degree of battery charge, grid voltage and voltage of a connected diesel generator. In current-controlled operation there can be synchronization to an external power supply unit (grid, diesel generator). In that operating mode the battery is e. g. charged to a defined degree.

3 Installation



The Sunny Island may only be installed by a qualified technician. Please read the corresponding chapters carefully. All installation work must be executed in compliance with the relevant standards. Please follow the general safety instructions (chapter 1.3).

3.1 Mounting Accessories Included in Delivery

Please find below the components ensuring easy mounting and installation of the Sunny Island which are included in delivery:

1 Installation and Operating Instructions

1 Slide for recommended mounting to wall (Fig. 3.2)

4 PG 13.5 glands incl. nuts

4 PG 13.5 blank screwed joints

3 PG 16 glands incl. nuts

3 Alkali manganese battery cells

1 Plug for battery temperature sensor

1 Plug “Diesel I U“

The following components can be delivered as an option:

- Pt100 contact sensor to determine the battery temperature (SMA order name “SI-BTS“). It is indispensable to connect a temperature sensor.

- Battery fuse box for the protection of the DC cables (SMA order names “SI-BATCASE.01” (for connection of a single Sunny Island) and/or “SI-BATCASE.03” (for connection of up to three Sunny Islands).
- Three-phase synchronization cable (connection between the different Sunny Islands in three-phase operation, SMA order name “SI-Synckabel-Set“).
- Plug-in relay to switch loads or start/stop diesel generator etc. (SMA order name “SI-BPRE“ (NO-type) resp. “SI-BPRE-OE” (NC-type)).
- 24 V auxiliary supply output port for special plant interconnections (see chapter 3.4), (SMA order name “SI-BP24“).
- RS485 interface or RS232 interface as Piggy-Back.
- Installation box for convenient connection of a mobile generator (SMA order name “SI-GENCASE.01”).
- Kit for update of the Sunny Island firmware (SMA order name ”SI-UPDATE”).

3.2 Placement of the Sunny Island

The Sunny Island is a highly integrated, electronic device which is extremely sensitive to moisture within the enclosure.



The Sunny Island is <u>not</u> suitable for outdoor installation.

For overall planning of your plant it is important to select a favorable location for the inverter/s. The following criteria are meant to help you decide where to position the Sunny Island:

Criteria for placement:

- Installation only possible indoors due to protection degree IP20.
- Do not expose the inverter to direct or indirect humidity.

- Keep cables leading to the battery storage as short as possible (DC cabling).
- Avoid installing in the living area as slight noise emission is possible.
- Avoid mounting on resonant parts and easily combustible materials (e. g. thin wooden panels, plaster panels, etc.)
- Provide accessibility for installation and later service.
- Installation at level height makes it possible to easily view the display and press the keys.

Please note the following points in any case:



- **The mounting background must be firm (weight of inverter approx. 45 kg).**
- **The ambient temperature must be between -25 °C and +45 °C.**
- **If the Sunny Island is transferred from a cold to a warm place, wait for a sufficient time (at least 15 minutes) before commissioning so that any moisture condensation that might have occurred can evaporate.**
- **A minimum distance of 20 cm must be clear above the inverter for ventilation, i.e. no cabinets, ceiling, etc.**
- **The free air circulation around the case must not be obstructed to ensure sufficient cooling.**
- **If you install the Sunny Island in a cabinet or closet etc., the air circulation must be sufficient for heat dissipation - provide external ventilation.**
- **The heat sink can reach a temperature of more than 80 °C.**
- **Provide a correct position of the battery inverter (see Fig. 3.1 and Fig. 3.2).**

Mounting on the wall

The Sunny Island is mounted on a mounting rail on a firm surface. Four screws and the corresponding dowels are necessary. The screws and dowels are not included in delivery and have to have a sufficient size. We recommend two 6 mm hexagon head screws and 8 mm dowels for fastening on top (see Fig. 3.1).



Make sure the mounting slide is securely fastened as it carries the inverter's total weight.

After fastening and checking the secure position of the mounting slide the Sunny Island is hung into the intended strap on the mounting slide and positioned with the correct orientation.

To prevent lifting up the Sunny Island is fastened on the wall with two screws (4.5 mm) and the corresponding dowels (M6) (see below).

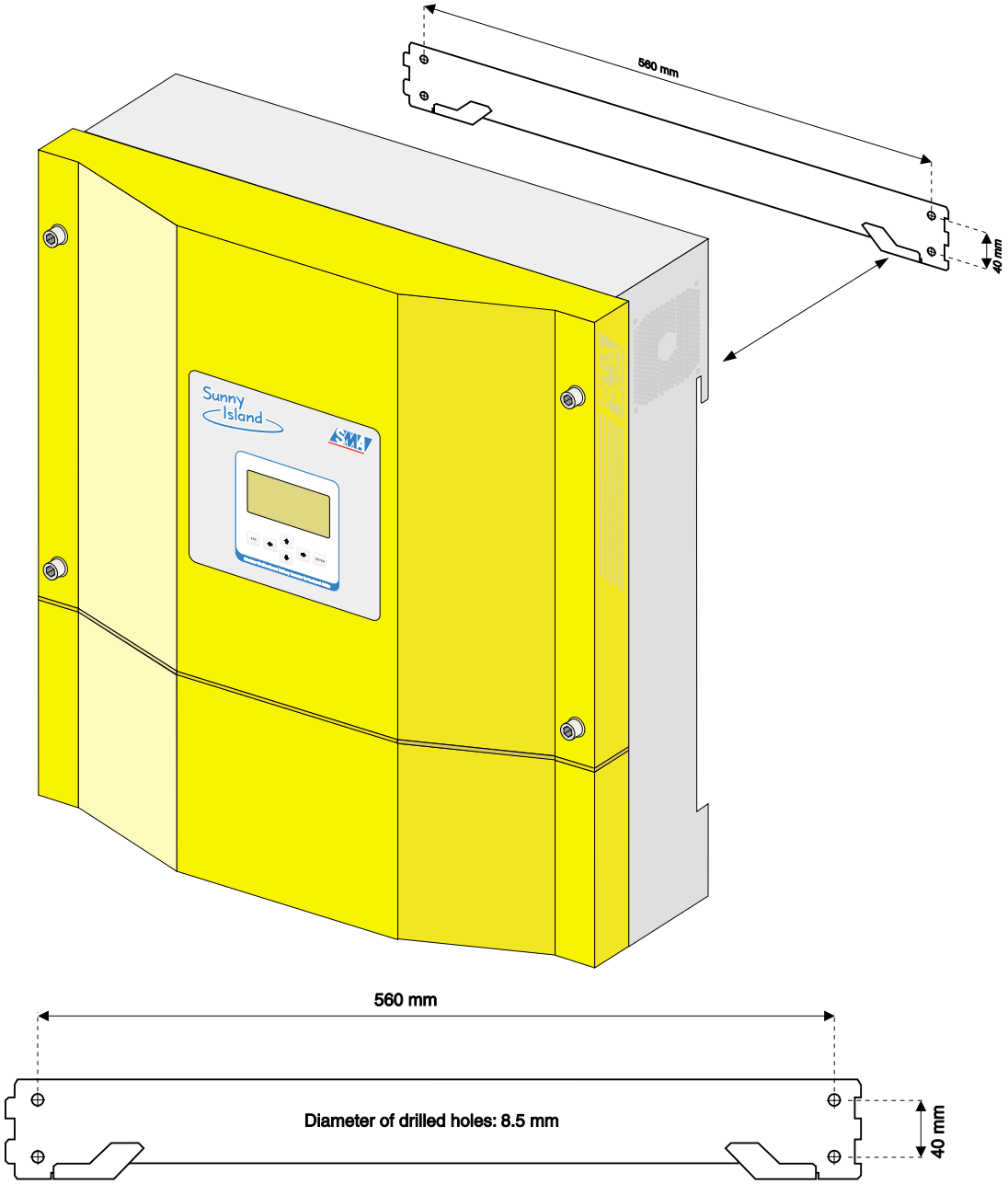

Fig. 3.1: Mounting slide with fastening points

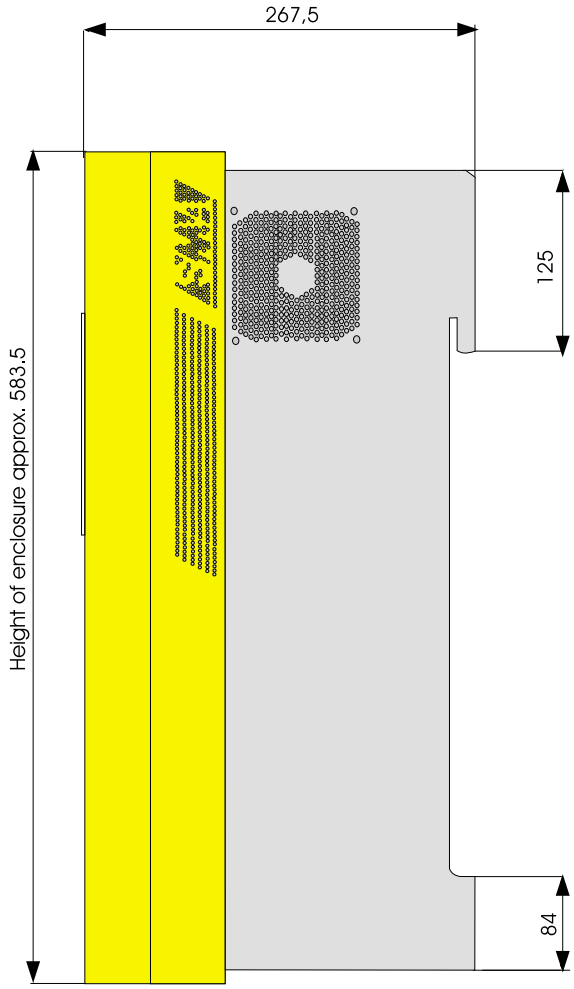

Fig. 3.2: Side view of the Sunny Island with dimensions

3.3 Electric Connection

The electric connection of the Sunny Boy can be done once the device is correctly mounted in its position.

The storage battery and the grid (connection to subdistribution) are connected to the lower part of the Sunny Island. At the bottom of the enclosure there are seven heavy-gauge conduit-threaded joints (four PG 13.5 and three PG16).

3.3.1 Preparing the Connection

Take off the case lid of the inverter's lower part. To this end remove the two hexagon socket screws (M5) accessible from the front.



Inside the lid there is a tab and receptacle connector with a green-yellow grounding cable (PE). Carefully disconnect this connector. After finishing the installation reconnect it.

Make sure the two automatic circuit breakers F1 and F2 are switched off.

After removing the two fastening screws the lower part of the plastic clamp cover can be removed as well ("lower protective cover").



Always mount this "lower protective cover" again before connecting any power supply units.

You now have the open part of the inverter in front of you and can familiarize yourself with the position of relevant components and clamps.

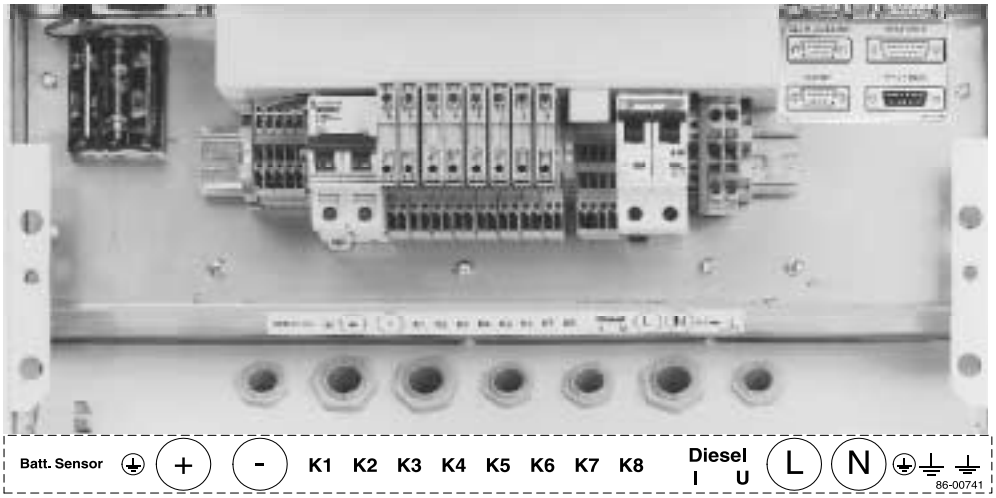

Fig. 3.3: Cable glands and terminals of the Sunny Island

You will find a diagram with designations of the different terminals inside the lower case lid as well.

3.3.2 Cable Connections

All possibilities to connect the inverter with the island plant are combined on one terminal strip (see Fig. 3.4).

- Terminals for battery temperature sensor (four-wire measurement)
- Storage battery terminal (at F1:+ and F1:- of the automatic circuit breaker on the left)
- Terminals for diesel start via relay K1
- Terminals for diesel contactor via relay K2
- Terminals for grid contactor via relay K3
- Terminals for additional switchable components such as wind energy converters, ohmic/inductive loads (via relays K1 to K8), freely configurable
- Terminals for battery room fan via relay K7
- Terminals for battery acid circulation via relay K8

If the relays K1, K2, K7 and K8 are not used for their special tasks, they can also be freely configured.

can also be freely configured.



The terminals K1 to K8 can only be used if they have been equipped with their respective relays/modules optionally available.

- Terminals for the measurement of generator voltage and current

- Grid connection (at F2:L and F2:N of the automatic circuit breaker as well as at the PE terminals on the right)

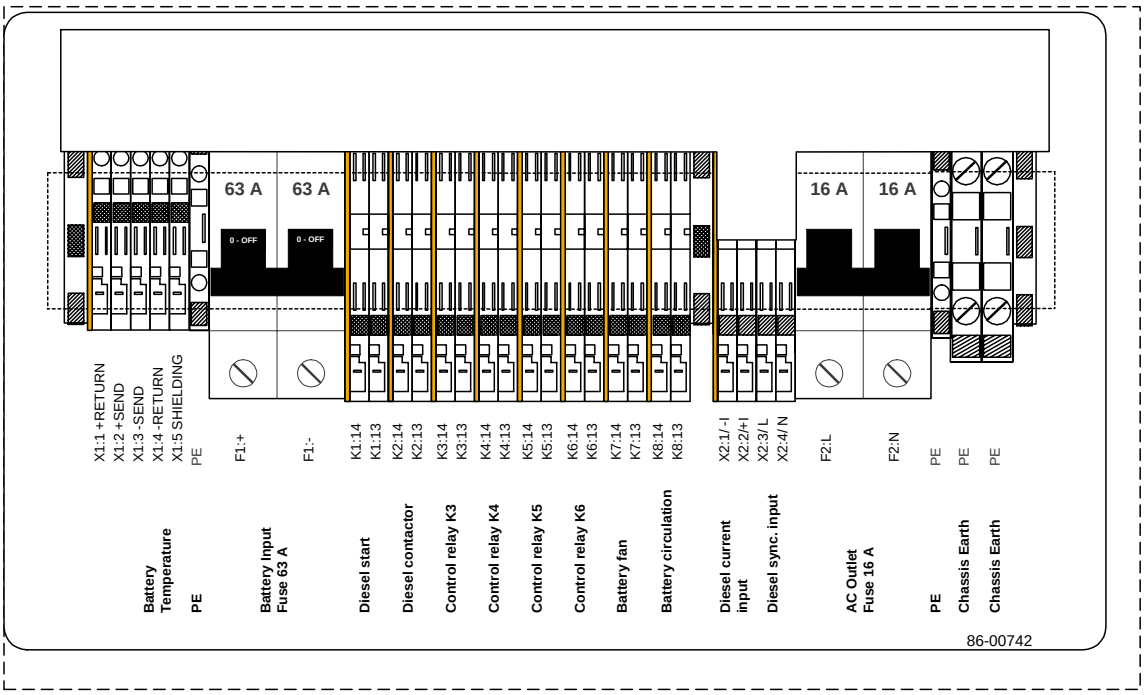

Fig. 3.4: Terminal strip of the Sunny Island

Table 3.1 shows the connector assignment on the terminal strip of the Sunny Island:

Designation	Description	Comments
X1:1	Battery temperature	+ RETURN
X1:2	Battery temperature	+ SEND
X1:3	Battery temperature	- SEND
X1:4	Battery temperature	- RETURN
X1:5	Shielding	Possibility to connect shielding of sensor cable

Designation	Description	Comments
PE	Chassis earth	Connection to ground, 2.5 mm²
F1: +	Battery input	63 A fuse, 25 mm²
F1: -	Battery input	63 A fuse, 25 mm²
K1:14	Diesel start	Relay K1 for generator start, a.o.
K1:13	Diesel start	Relay K1 for generator start, a.o.
K2:14	Diesel contactor	Relay K2 for control of contactor “Generator – island grid“, a.o.
K2:13	Diesel contactor	Relay K2 for control of contactor “Generator – island grid“, a.o.
K3:14	Control relay	Relay K3 for control of contactor “Public grid – island grid“, a.o.
K3:13	Control relay	Relay K3 for control of contactor “Public grid – island grid“, a.o.
K4:14	Control relay	Relay K4 for control of contactor “Island grid – Sunny Island“, a.o.
K4:13	Control relay	Relay K4 for control of contactor “Island grid – Sunny Island“ a.o.
K5:14	Control relay	Relay K5 for measuring-point selection, a.o.
K5:13	Control relay	Relay K5 for measuring-point selection, a.o.
K6:14	Control relay	Relay K6 for warming up and starting diesel, a.o.
K6:13	Control relay	Relay K6 for warming up and starting diesel, a.o.
K7:14	Battery fan	Relay K7 for battery room fan, a.o.
K7:13	Battery fan	Relay K7 for battery room fan, a.o.
K8:14	Battery circulation	Relay K8 for battery circulation pump, a.o.
K8:13	Battery circulation	Relay K8 for battery circulation pump, a.o.
X2:1 / -I	Diesel current input	Diesel current measurement input, via current probe, K
X2:2 / +I	Diesel current input	Diesel current measurement input, via current probe, L
X2:3 / L	Diesel sync. input	Diesel voltage measurement input, L
X2:4 / N	Diesel sync. input	Diesel voltage measurement input, N
F2:L	AC outlet	16 A fuse
F2:N	AC outlet	16 A fuse
PE	Chassis earth	Connection to ground 2.5 mm²
PE	Chassis earth	Connection to ground 10 mm²
PE	Chassis earth	Connection to ground 10 mm²

Table 3.1: Description of terminal strip

3.4 Examples for Connection

In the following chapters you can read about the possibilities how to connect the inverter to its environment. Examples for the different connection types are provided.



How to wire the components and the Sunny Island for protective grounding depends on the type of grid installed and can therefore differ. Therefore the figures below do not show any wiring. Of course the entire cabling must be installed compliant with all relevant standards and regulations.

3.4.1 Connection to Ground

Due to filtering measures within the Sunny Island increased leakage currents to PE can occur during operation. Therefore make sure the inverter is firmly grounded according to DIN EN50178.



To this end the inverter can be grounded at the ground terminals in the terminal area either with one single copper conductor of a minimum 10 mm² cross-section or with two separate copper conductors with cross-sections corresponding at least to the respective AC conductor.

If the two ground conductors are not part of the AC connection cable they should have a minimum cross-section of 4 mm² each.

Due to galvanic isolation between the battery and grid side within the Sunny Island it is basically possible – but not absolutely necessary – to ground the minus or plus pole of the battery externally. In this case make sure that the very high currents that can occur for a short time in case of a error are discharged as well.

We cannot make general recommendations for the dimensioning of the required grounding cable as this considerably depends on the type of battery used, the external fused interrupter and the design of the incoming cables of the battery.

If an additional grounding cable with a larger cross-section is required this can be connected to the M6 threaded hole (marked as such) on the aluminum backplane (heat sink) of the Sunny Island.



The required cable cross-section of the grounding conductor can be estimated with the following formula for fused interrupters with disconnecting times up to 5 s if a copper cable is used:

$$S = \frac{\sqrt{(I_{sc}{}^2 * t)}}{143}$$

t = disconnecting time in seconds, I_{sc} = maximum battery current (short-circuit current) in amperes, S = conductor cross-section in mm²

The maximum battery current can be seen in the data sheets for the battery. If this is not possible it can usually be estimated with the following formula:

$$I_{sc} = \frac{C}{0{,}05h}$$

C = battery capacity in Ah

For an exact determination of the grounding conductor cross-section please refer to the relevant standards (e. g. VDE 0100 part 540).

3.4.2 Connection of the battery

On the DC side a suitable storage battery has to be connected according to DIN VDE 0510 (VDE specification for electric storage batteries and battery plants).



Make sure the cable to the storage battery has a sufficient cross-section. Pay attention to the correct polarity of the connection to the storage battery.

If the battery is to be grounded please follow the special instructions in chapter 3.4.1.

We urgently recommend a fused interrupter to disconnect the Sunny Island.

If there is no line protection (fuse) the installation of DC cables has to be inherently ground-fault-proof and short-circuit-proof. The internal DC fuses of the Sunny Island are designed for interrupting currents of up to 20 kA (for $\frac{R}{L}$ < 0,015 s).

The relevant regulations for installation have to be followed.

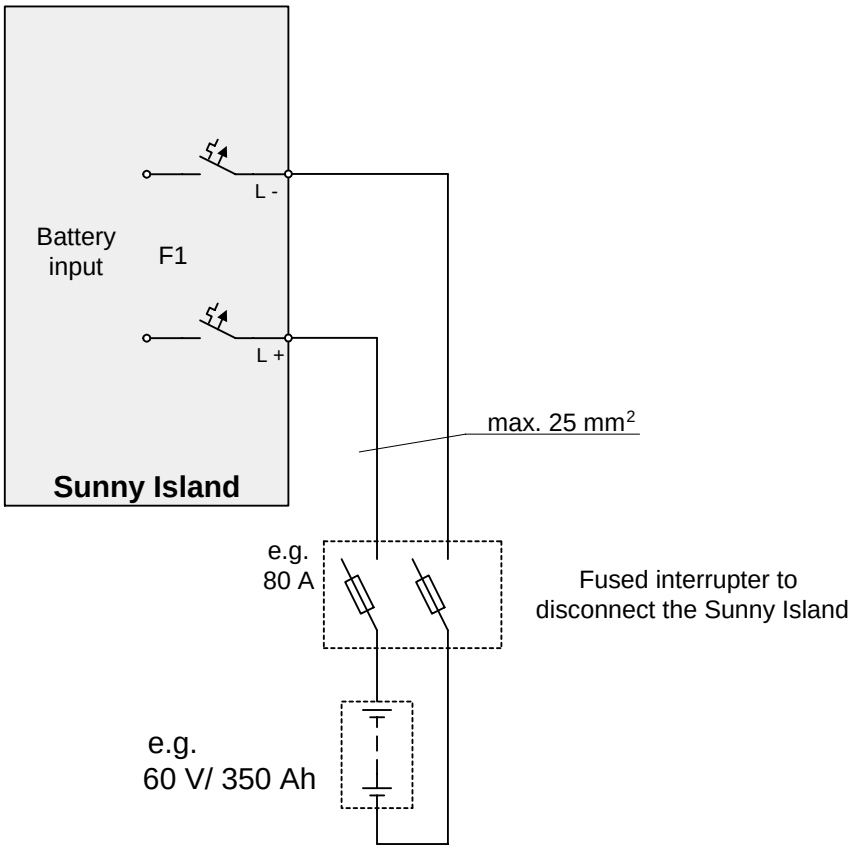

Fig. 3.5: Connection of battery to the Sunny Island

The nominal voltage of the battery to be connected is 60 V DC.

Never remove the battery cable during operation. Always switch the inverter off first.

The battery cables should be as short as possible. Long cables reduce efficiency and the tolerable overload and deteriorate the battery management.

3.4.3 Connection of Battery Temperature Sensor

A PT 100 sensor with four-wire technology is required to measure the battery temperature. The sensor is connected to the inverter at the terminals X1:1-X1:4 (Fig. 3.6).

If the temperature sensor is to be connected with a shielded cable, connect the shielding to terminal X1:5. This terminal is connected to the case and thus to the PE connections of the inverter. Therefore make absolutely sure to avoid creating any electric bond by attaching the temperature sensor to the battery.

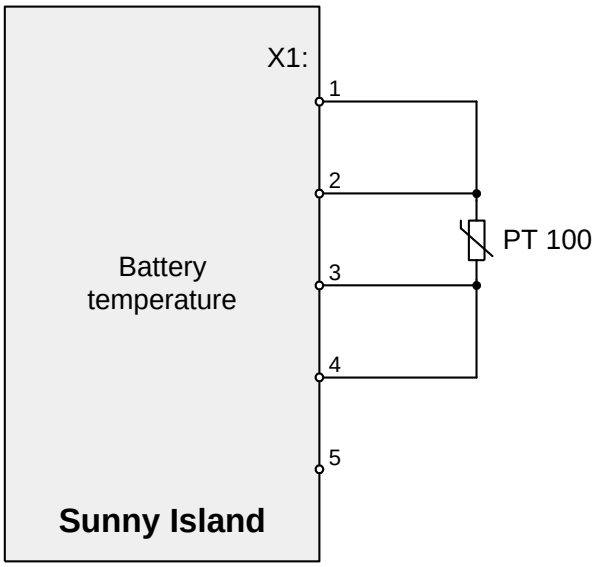

Fig. 3.6: Connection of a temperature sensor



To protect the battery always connect a battery temperature sensor (the Sunny Island displays a failure if no sensor is installed).
In a three-phase island system only the master Sunny Island needs to be equipped with a battery temperature sensor.



If a battery temperature sensor is installed later, the Sunny Island will only detect it after a restart!

3.4.4 Connection to AC Voltage

On the power side the AC voltage is connected to the automatic circuit breaker F2. If there is only one electric circuit this can be directly supplied by the Sunny Island. If there are additional devices feeding the grid, such as wind generators, separate circuits and thus an external distribution is recommended.

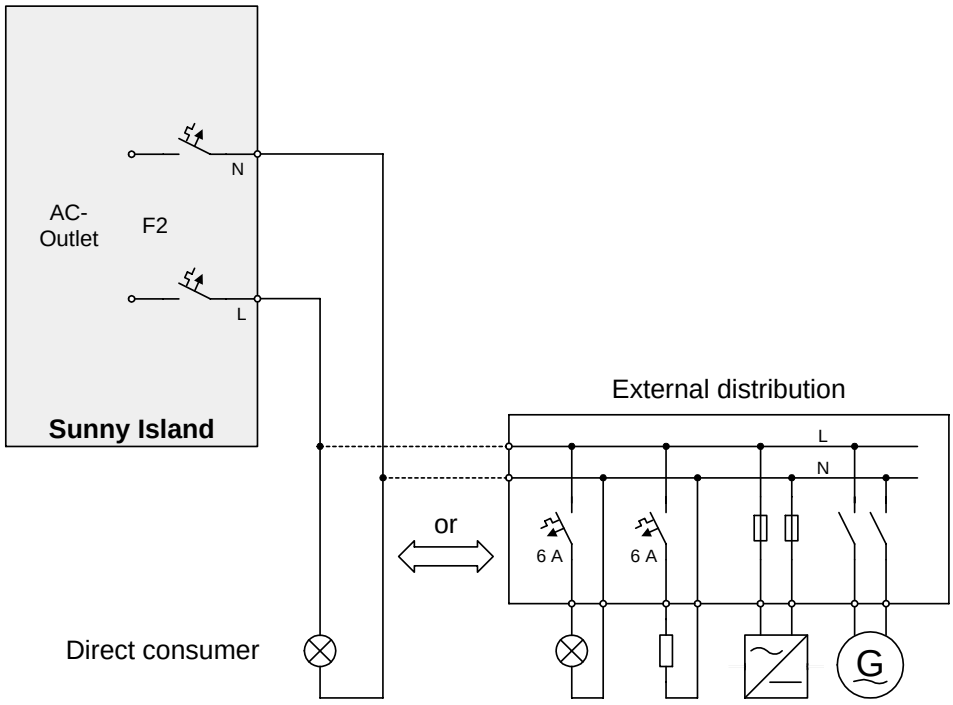

Fig. 3.7: AC voltage connection

Fig. 3.7 shows an exemplary layout of a subdistribution if additional electric circuits and grid-feeding devices are integrated into the system.

3.4.5 Connection to Generator Current and Voltage Measurement

If a generator (diesel, gas) is integrated into the island grid the diesel voltage must be measured via the input “Diesel sync input” of the Sunny Island.

All integrated monitoring and control features are not available until also the diesel current is fed to the Sunny Island via an inverter. The measurement is connected as shown in Fig. 3.8.

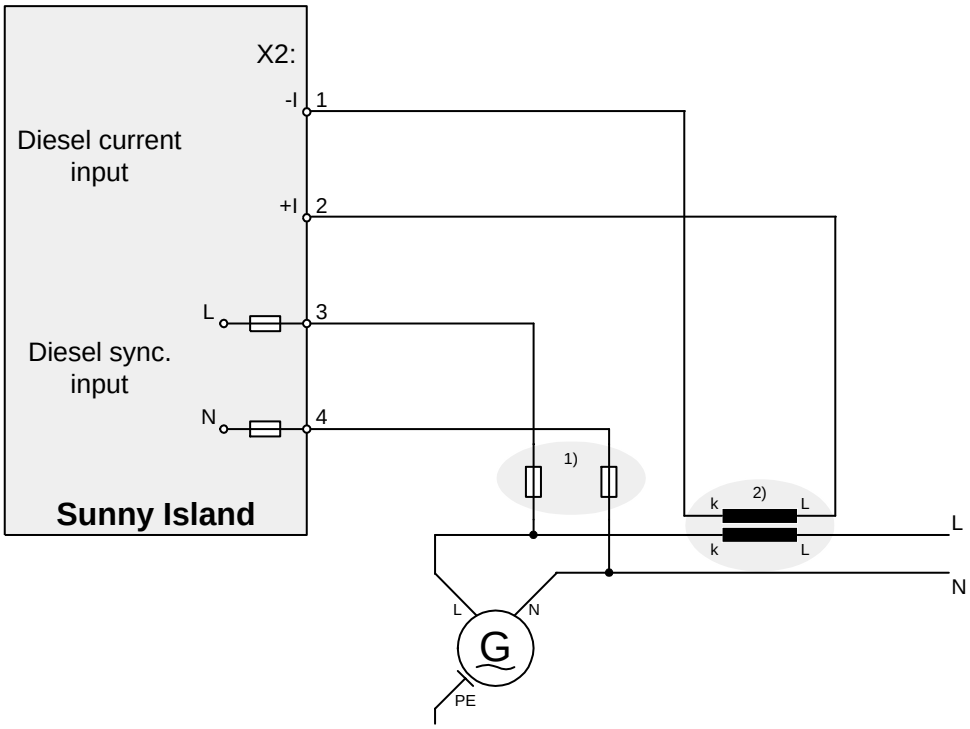

Fig. 3.8: Connection of generator current and voltage measurement

1) Fuses for the protection of the generator voltage sensor cables, 2) Current converter

Ensure sufficient fusing of the generator voltage sensor cables.

The cross-section of the cable leading from the current converter to the inverter should be large enough to keep losses low (compare Fig. 3.9).

If the measuring circuit of the inverter is opened during operation this can lead to overvoltages and destruction of the current converter. The measuring circuit therefore has to be short-circuited at the current converter.

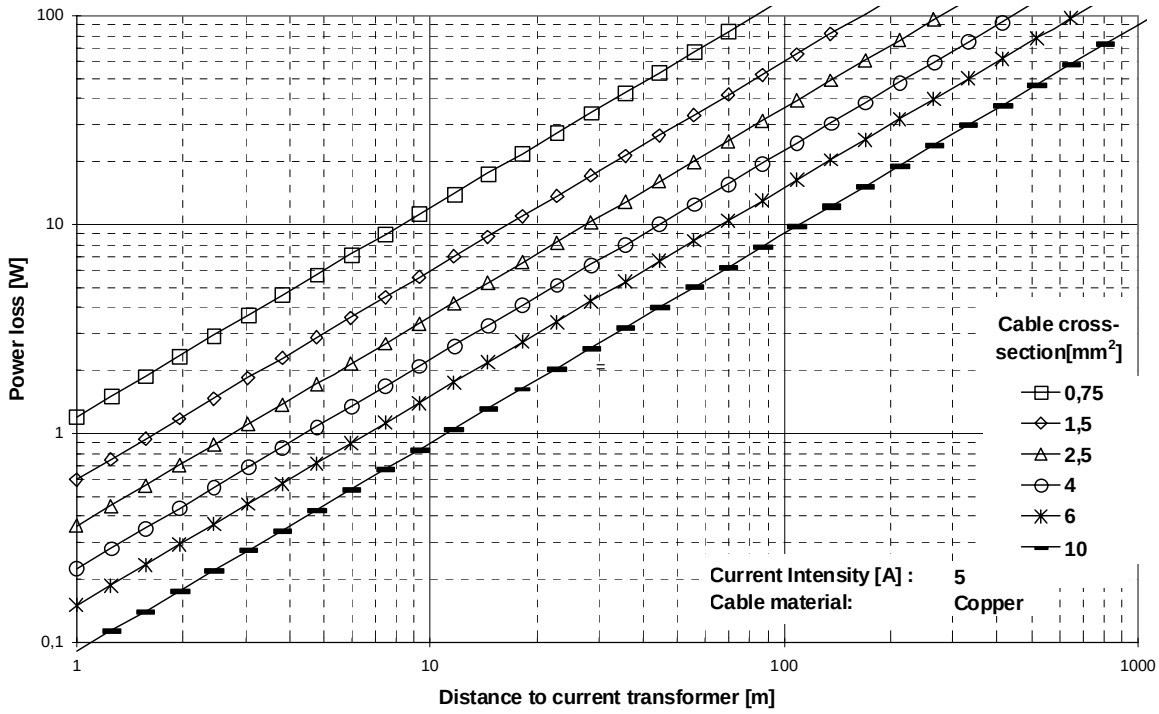

Fig. 3.9: Power loss due to the secondary circuit to the inverter

3.4.6 Connection of a Generator

If e. g. a diesel generator is integrated into the island grid, not only the measurement signals listed in chapter 3.3, but also the control signals “Diesel start“ and “Diesel contactor“ have to be wired as shown in Fig. 3.10.

The generator is switched on with the relay “Diesel start“ (K1). When it has started up the Sunny Island goes idle (short interruption) and connects the generator’s voltage to the island grid by switching the relay “Diesel contactor” (K2). Afterwards the Sunny Island changes to grid tied operation (“RUN_I”).

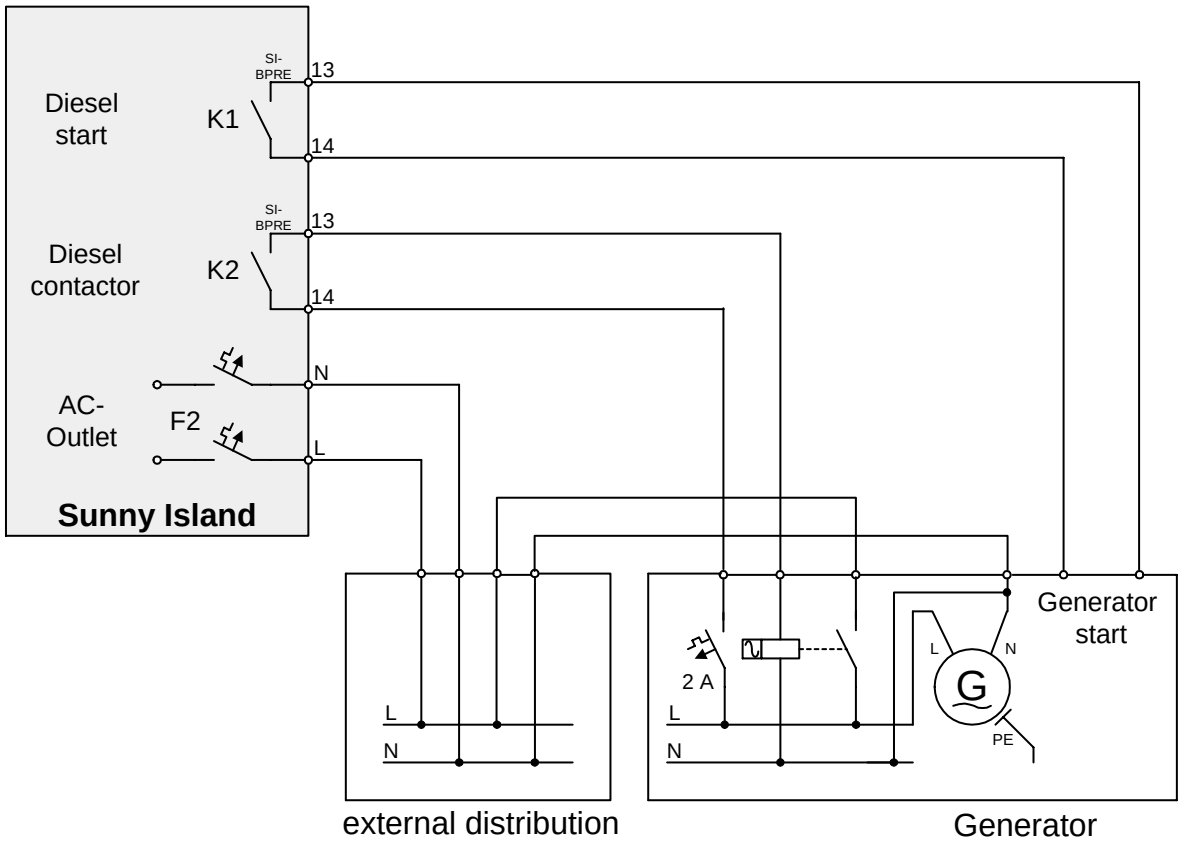

Fig. 3.10: Connection of a (diesel) generator

Three common options to start diesel generators are described in chapter 16.

In most switch-over situations the period of time for „short interruptions“ can be substantially reduced by means of a slightly more complicated cabling (Fig. 3.11). Naturally, this time cannot be reduced in case of a shutdown of the generator – unpredictable for the Sunny Island - (manual deactivation, failure due to fuel deficiency, or the similar).

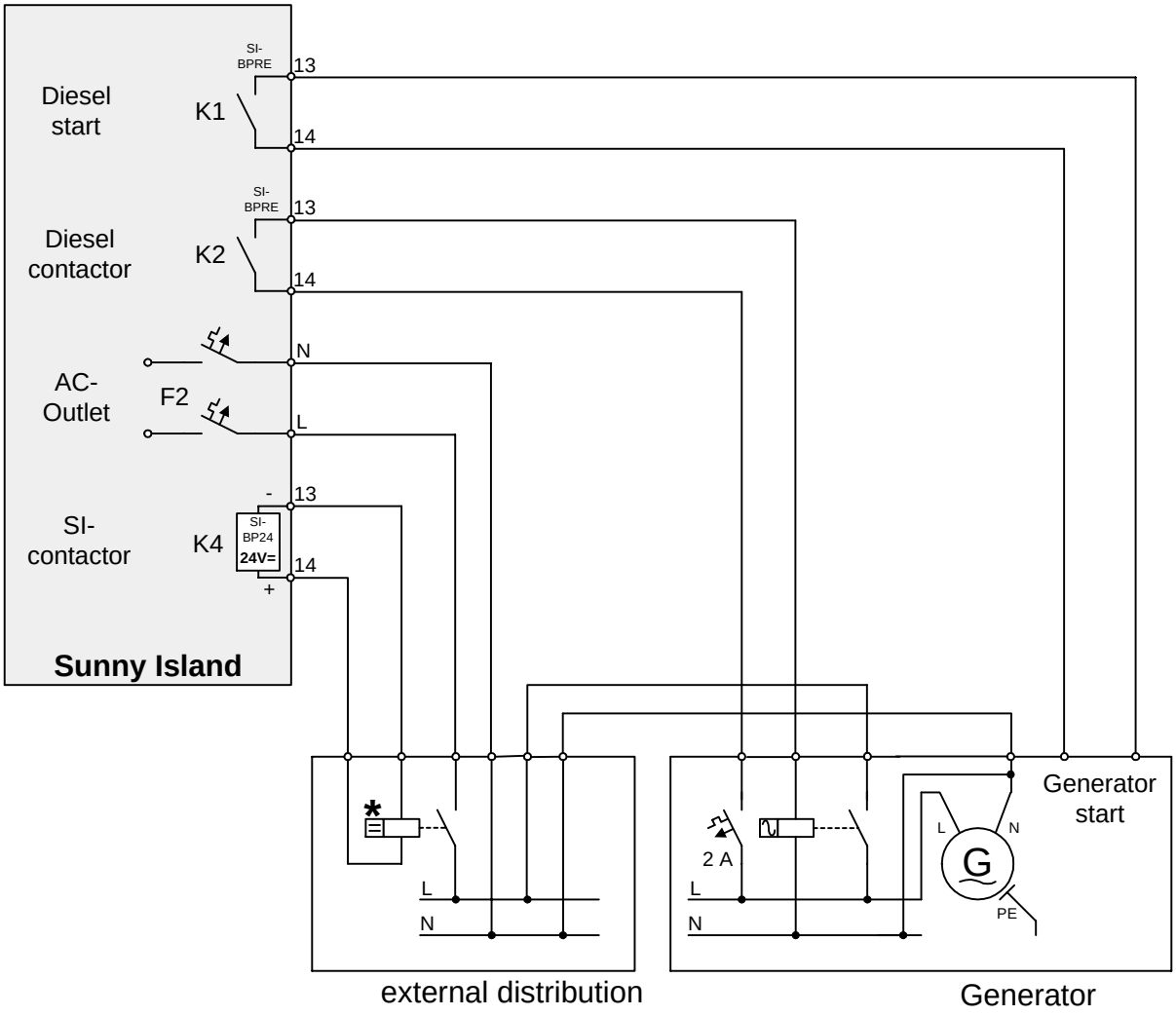

Fig. 3.11: Example of connection for an accelerated switch-over (generator)

* This relay shall not overcharge the 24 V auxiliary supply output (SMA order name ”SI-BP24“)! A relay complying with the requirements is available with the SMA order name ”SI-BPRETR“.

3.4.7 Connection to an External Utility



Such a plant option requires a particularly responsible design and accomplishment in order to prevent accidents based on the assumption that the plant is deenergized as it is disconnected from the utility!

In several operating modes energy feeding into the external utility is possible via the Sunny Island!

The illustrated interconnection plans show the grid connection oonly in principle. In any case, the local applicable regulations have to be complied with and the approval of the public utility company is mandatory!

If the public mains supply often fails, an island utility can be desirable. In this case the Sunny Island will normally charge the battery during supplementary grid feeding from the external utility. In case of mains failure the plant must be disconnected from the external utility and the Sunny Island must provide the 230 V island grid in grid-forming operation. After the external utility has recovered, the Sunny Island needs to detect this voltage and the switch-over to island operation mode has to be reversed.

The necessary wiring is shown in Fig. 3.12. The voltage sensor cables that also have to be connected with the voltage measurement input port “Diesel sync input” – just like in the case of the connection of a generator (see chapter 3.4.5 and chapter 3.4.6) – are not shown.

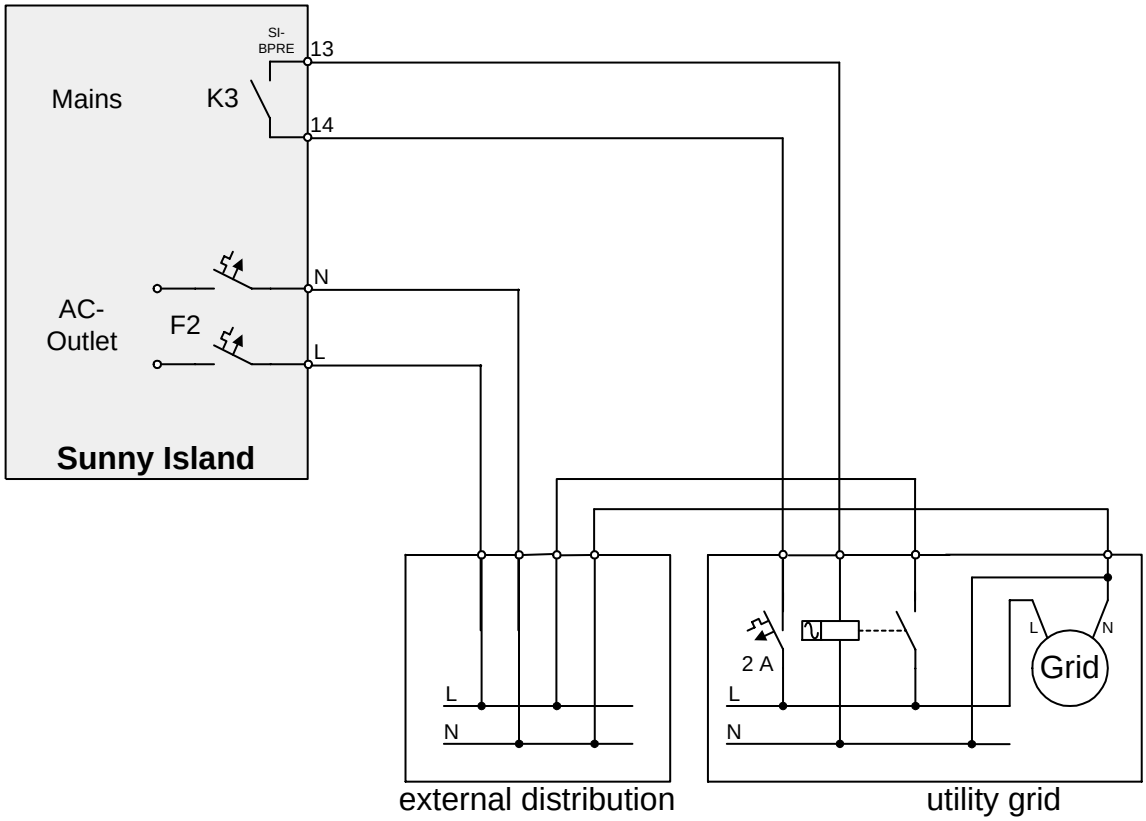

Fig. 3.12: Connection to an external utility

The switch-over times can also be reduced by means of a more complicated wiring for the connection to the recovered external utility (Fig. 3.13). Of course, the Sunny Island can by no means forecast a failure of the external utility. Thus, it is in principle not possible to reduce this time during the switch-over to island operation mode.

Fig. 3.13 does not show the necessary wiring of voltage sensor cables either.

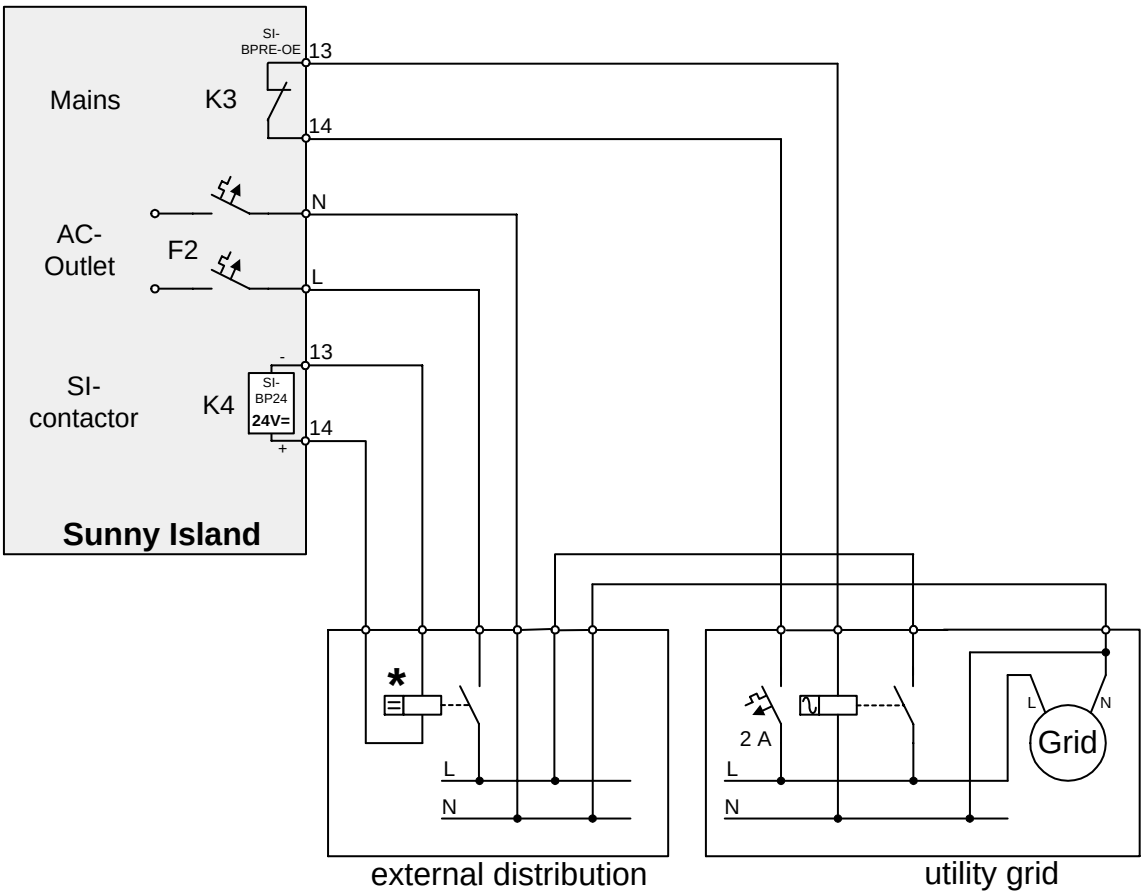

Fig. 3.13: Connection for an accelerated switch-over (utility)

* This relay shall not overcharge the 24 V auxiliary supply output (SMA order name ”SI-BP24“)! A relay complying with the requirements is available with the SMA order name ”SI-BPRETR“.

3.4.8 Connection to Generator and Utility



Such a plant option requires a particularly responsible design and accomplishment in order to prevent accidents based on the assumption that the plant is deenergized as it is disconnected from the utility!

In several operating modes energy feeding into the external utility is possible via the Sunny Island!

The illustrated interconnection plans show the principle grid connection. In any case, the local applicable regulations have to be complied with and the approval of the public utility company is mandatory!

The connection of the island grid with generator to an external utility is supported by the Sunny Island from Firmware BFR 1.50 and higher. For this purpose a special external interconnection with the voltage measurement is required, as shown in Fig. 3.14.

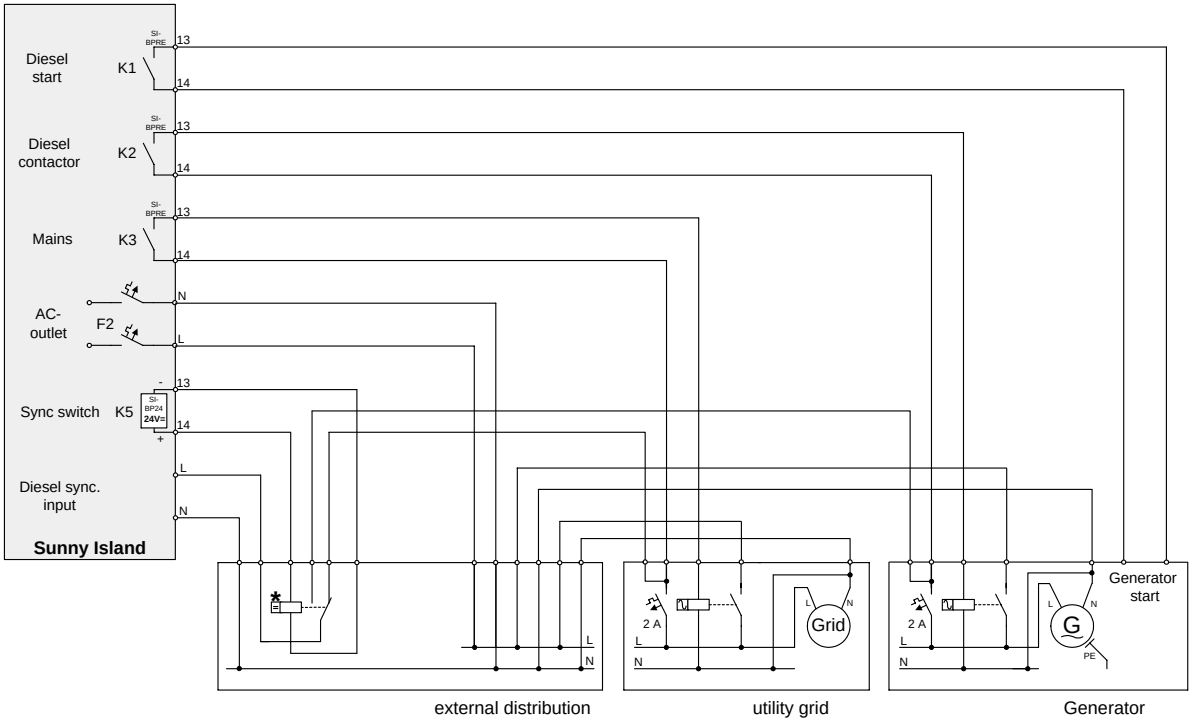

Fig. 3.14: Connection to generator and utility

* This relay shall not overcharge the 24 V auxiliary supply output (SMA order name ”SI-BP24“)! A relay complying with the requirements is available with the SMA order name ”SI-BPRETR“.

The switch-over times can also be reduced just by a little more expenditure (Fig. 3.15).

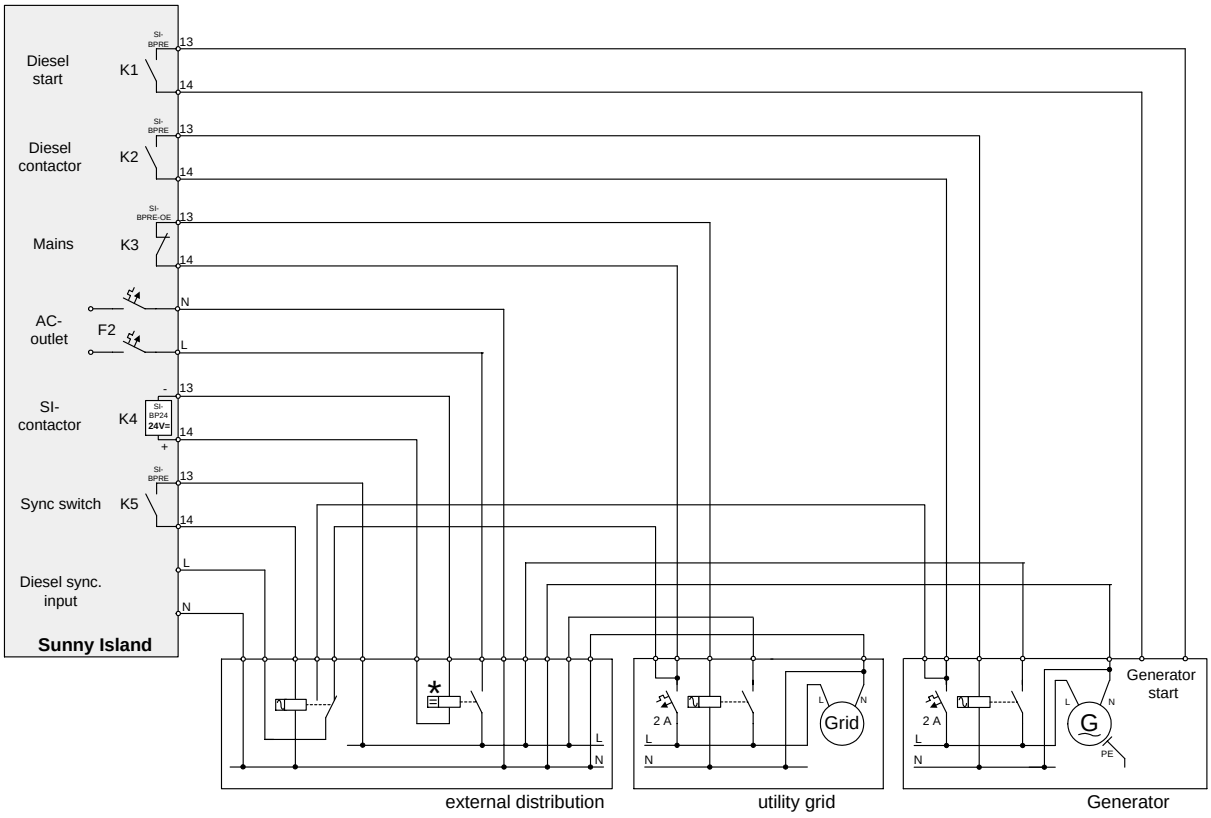

Fig. 3.15: Example of an accelerated switch-over (generator and utility)

* This relay shall not overcharge the 24 V auxiliary supply output (SMA order name ”SI-BP24“)! A relay complying with the requirements is available with the SMA order name ”SI-BPRETR“.

3.4.9 Connection of a Battery Room Fan and Electrolyte Pump

If lead-acid battery arrays with liquid electrolytes are used as energy stores, the control of an electrolyte circulation pump is to be connected via the relay terminal K7. A battery room fan can be controlled via the relay terminal K8. Switch-on and switch-off criteria can be defined via the menu of the Sunny Island. For wiring see **Fig. 3.16**.



The switched current of the relays K7 and K8 is a maximum of 5 A at 230 V AC. A detailed limit curve is shown in chapter 18.

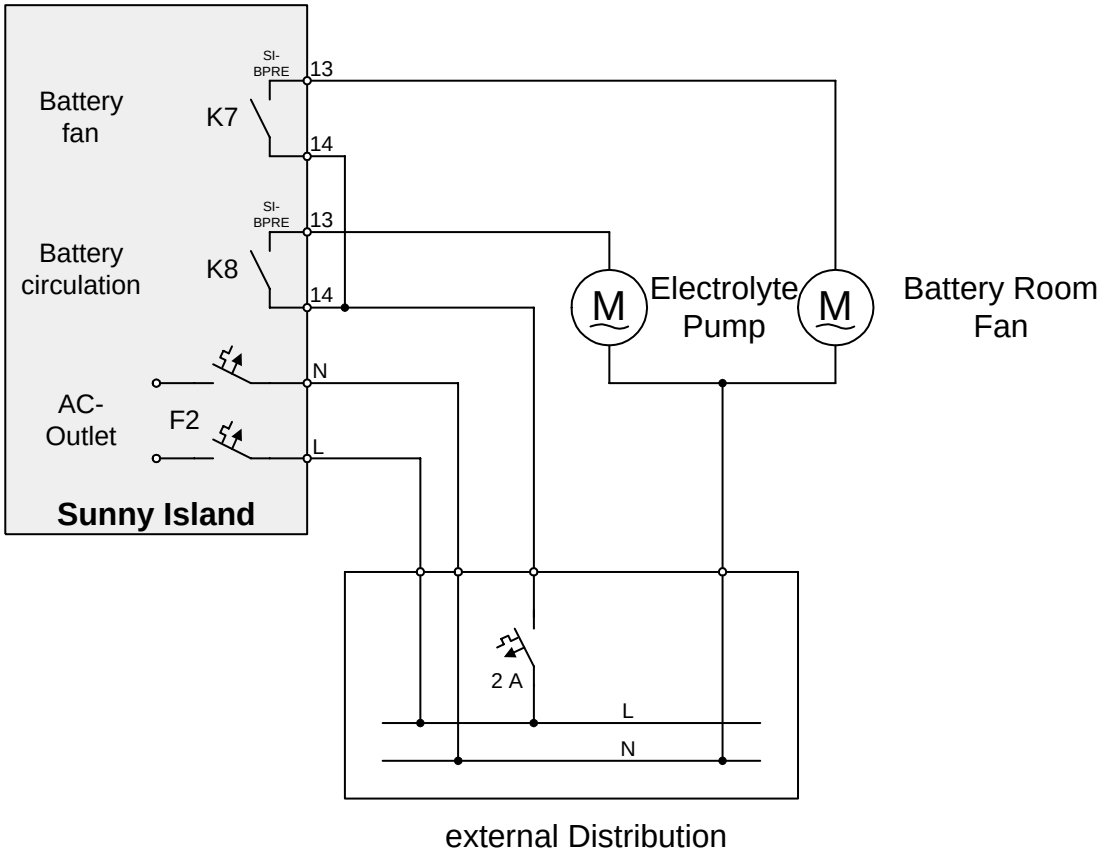

Fig. 3.16: Connection of a battery room fan and electrolyte pump

3.4.10 Connection of a Dump Load

If there is a surplus of energy in the island grid which is not utilized, but cannot be stored either because the batteries are fully charged, it makes sense to connect an additional consumer (dump load). It is connected to one of the relays not yet used otherwise (K1 to K8) as shown in Fig. 3.17.



The switched current of the relays K1 to K8 is a maximum of 5 A at 230 V AC. A detailed limit curve is shown in chapter 18.

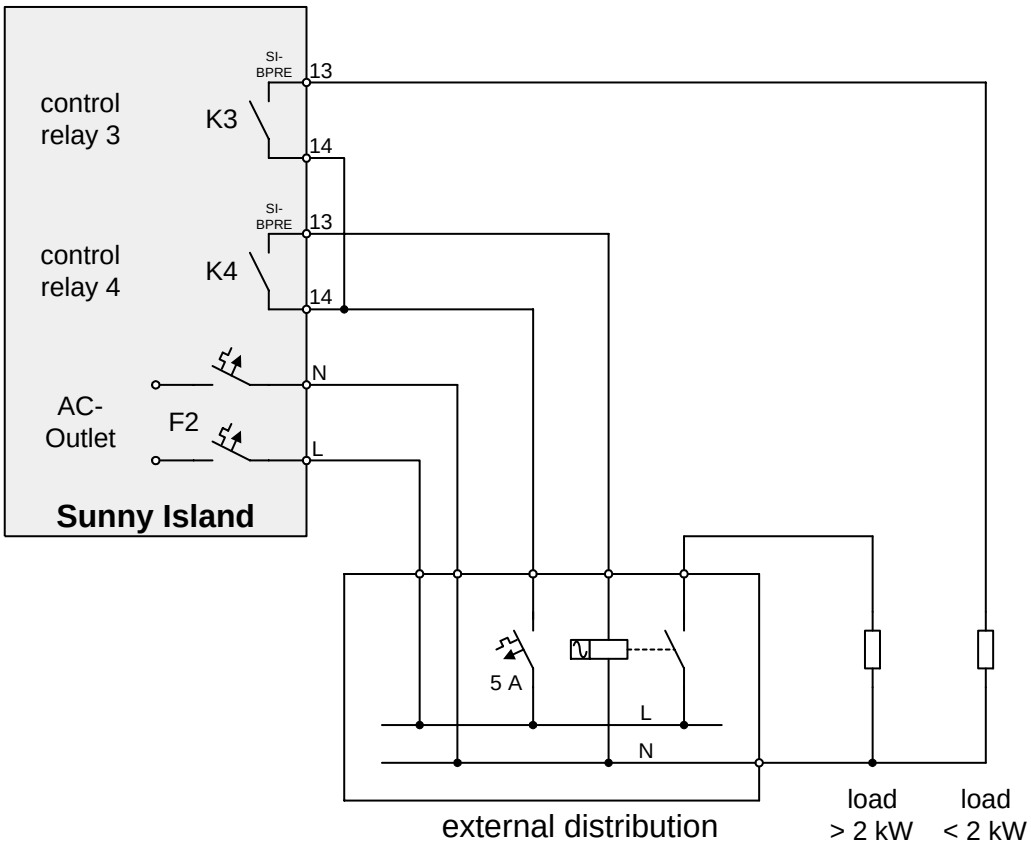

Fig. 3.17: Connection of an additional load (“dump load“)

3.5 Finalization of Electrical Wiring

Always mount the “lower protective cover“ (lower part of plastic terminal cover, see chapter 3.3.1) with the two corresponding screws after wiring has been completed and before any power supply units are connected!

3.6 Interfaces for Communication

The Sunny Island has a total of three interfaces. These interfaces make it extremely easy to configure and operate the Sunny Island.

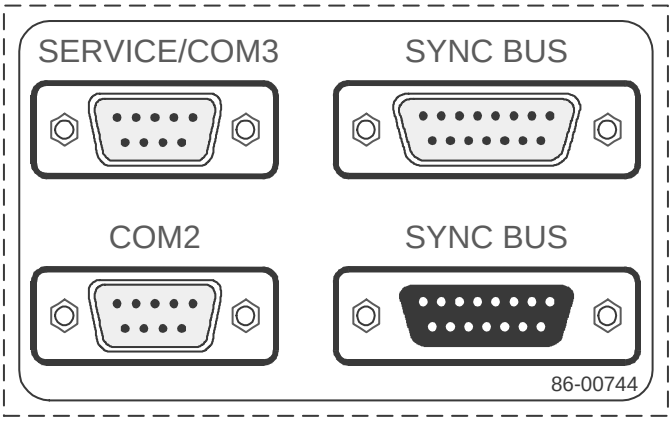

Fig. 3.18: Interfaces of the Sunny Island

COM1 (SYNC BUS) is an RS485 interface e. g. for data exchange between the system management processors of several Sunny Islands in three-phase operation. A synchronization signal ensures phase synchronization in three-phase operation. This signal is exchanged among the control processors of the individual Sunny Islands. As it is transmitted in one cable together with the RS485 signal, a special cable set (SMA order name “SI-Synckabel-Set“) is required for three-phase operation.

The COM2 interface can be equipped to comply with different electrical standards such as RS232 or RS485 by plugging on a Piggy-Back. Via this interface parameters can be set or modified with a PC or Sunny Boy Control. If Sunny Boy String Inverters are used in the island grid defined power control of the Sunny Boys is possible via this interface as well. This is especially important for optimum battery management (e. g. for full charging, compare chapter 11). With a PC and the software package Sunny Data which is available as an accessory (SMA order name “SWR-DA“) it is possible to diagnose and record data of all SMA components (Sunny Boy and Sunny Island) connected to this interface.

COM3 is an RS232 interface used exclusively for service. A complete software update for the system management processor or the control processor can be made via COM3. In addition to a PC and a modem elimination cable this requires a software tool available from Sam's website.

3.6.1 Assignment of COM1 Interface (Three-Phase Operation)

In a three-phase island grid the COM1 interface is required for synchronization of the three phases. The three Sunny Islands in one system have to be interconnected with special 15-pin interface cables available as an accessory (SMA order name "SI-Synckabel-Set"). The assignment of the SYNC BUS interface is shown in Table 3.2.

Each Sunny Island is equipped both with a plug connector (A) and a socket connector (B).

PIN	Plug connector A (RS485) top	Socket connector B (RS485) bottom
1	+5 V	+5 V
2	Sync	Sync
3	/Sync	/Sync
4	DO/DI	DO/DI
5	/DO/DI	/DO/DI
6	SPICLK	SPICLK
7	/SPICLK	/SPICLK
8	SPIMAOUT/SIN	SPIMAOUT/SIN
9	/SPIMAOUT/SIN	/SPIMAOUT/SIN
10	SPIMAIN/SOUT	SPIMAIN/SOUT
11	/SPIMAIN/SOUT	/SPIMAIN/SOUT
12	AB CONFIG A	GND
13	GND	AB CONFIG E
14	GND	GND
15	GND	GND

Table 3.2: Assignment of COM1 (SYNC BUS) interface

3.6.2 Assignment of COM2 Interface

The signals listed in Table 3.3 are available when the corresponding Piggy-Back has been installed.

PIN	RS485 Signal	RS232 Signal
1		
2	Data +	/RXD (Input of Sunny Island)
3	Data +	/TXD (Output of Sunny Island)
4		DTR (Output of Sunny Island)
5	GND	GND
6	+5V	DSR (Input of Sunny Island)
7		RTS (Output of Sunny Island)
8	Data -	CTS (Input of Sunny Island)
9	Data -	

Table 3.3: Assignment of COM2 interface (RS485 / RS232)

Recommended cable for RS485 (COM1 and COM2)

We generally recommend a so-called LICY 2 x 2 x 0.25 mm² cable as shown in Fig. 3.19.

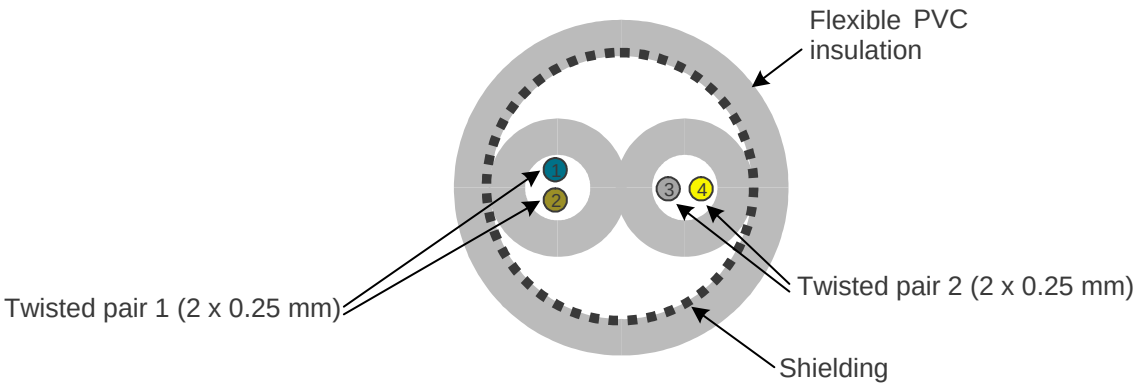

Fig. 3.19: Recommended cable for RS485 communication

The total length of the RS485 connection cable may not exceed 1200 m.

3.7 Connection with Sunny Boy and Sunny Boy Control

To establish the recommended communication connection via RS485 (COM2) from the Sunny Island to the Sunny Boy Control and Sunny Boy, all devices have to be equipped with an RS485 interface. This option can be requested when ordering a device. Devices that have already been installed can be upgraded with RS485 communication later. This requires a special conversion kit.

The RS485 connection between the three devices, as already described in chapter 3.6, not only makes possible configuration of the Sunny Island, but also defined power limitation of the Sunny Boys as well as data recording with Sunny Data or Sunny Boy Control.

If a Sunny Boy Control is installed later, pay attention to the required settings, jumpers etc. as described in the manual for the Sunny Boy Control.

3.7.1 Simple Connection at COM2 Interface

An RS485 G1 Piggy Back is required to upgrade the Sunny Island with a communication connection via the RS485 interface (COM2) later. Balancing and termination at the Sunny Island should be provided as shown in Fig. 3.20

In this plant layout this interface of the Sunny Island (COM2-RS485) is used for controlled power limitation of the Sunny Boys to ensure controlled full charging of the storage battery.

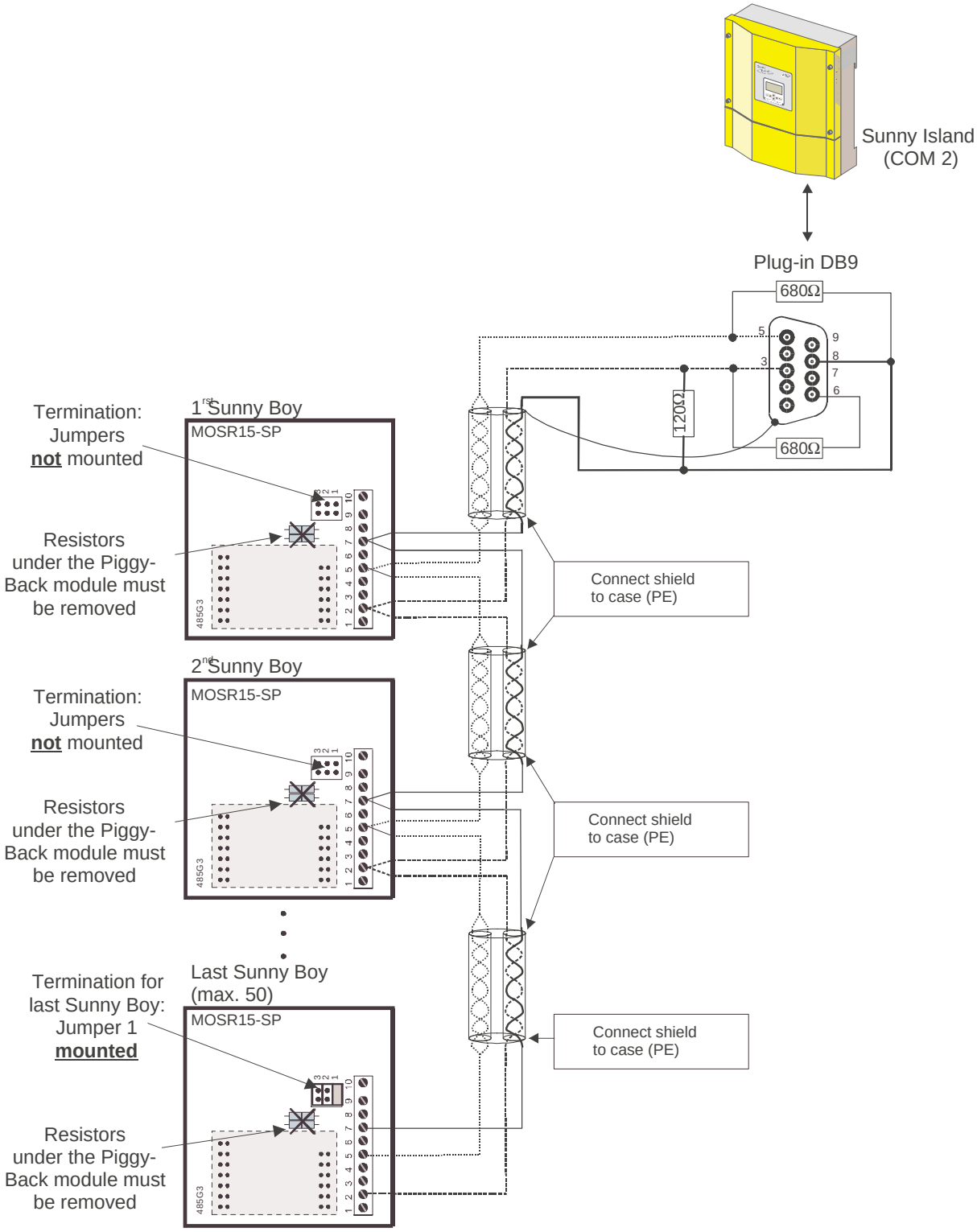

Fig. 3.20: Connection of Sunny Boys at Sunny Island's COM2 (RS485)

3.7.2 Multiple Connection at COM2 Interface

Chapter 13 describes the exemplary integration of feeders such as diesel generators or block-type thermal power plants. To ensure fail-safe and troublefree establishment of the communication connection please follow the instructions below:



Make sure there are termination resistors at the beginning and the end of the RS485 bus. These can be activated either with jumpers within the device, for the Sunny Boy Control alternatively with an external bridge between pin 7 and pin 9 or with external resistors in the plug.



One of the devices on the RS485 bus has to be equipped with balancing resistors. In the Sunny Boy Control these are already activated with jumpers inside the device so that normally no additional measures have to be taken.

3.7.3 Simple Connection to PC

A PC is connected to a Sunny Island via RS232 with an ordinary serial data transmission cable (modem elimination cable, SMA order name “SBCO-PC“).

If your PC is equipped with DB25 plugs or if only a DB25 plug is free (e. g. the COM1 DB9 plug is already used by a serial PC mouse) you additionally require a DB25/DB9 adapter (SMA order no. 36-5010).

You can also manufacture such a cable yourself following the description in the manual for the Sunny Boy Control (chapter 3.2, PC interface). You will find this manual on our website www.SMA.de for download.

3.7.4 Alternative Communication at COM1 Interface

Fig. 3.21 shows as an example a simple island grid plant with a Sunny Boy as the photovoltaic feeder, Sunny Island, Sunny Boy Control Plus and communication PC. A motor feeding the grid is not included here but could be easily integrated.

The RS485 interface (COM1, SYNC BUS) of the Sunny Island to the PC is available for communication in a single-phase island grid. All parameters and measured values of the Sunny Island can be displayed in the well-known manner with the communication software Sunny Data.

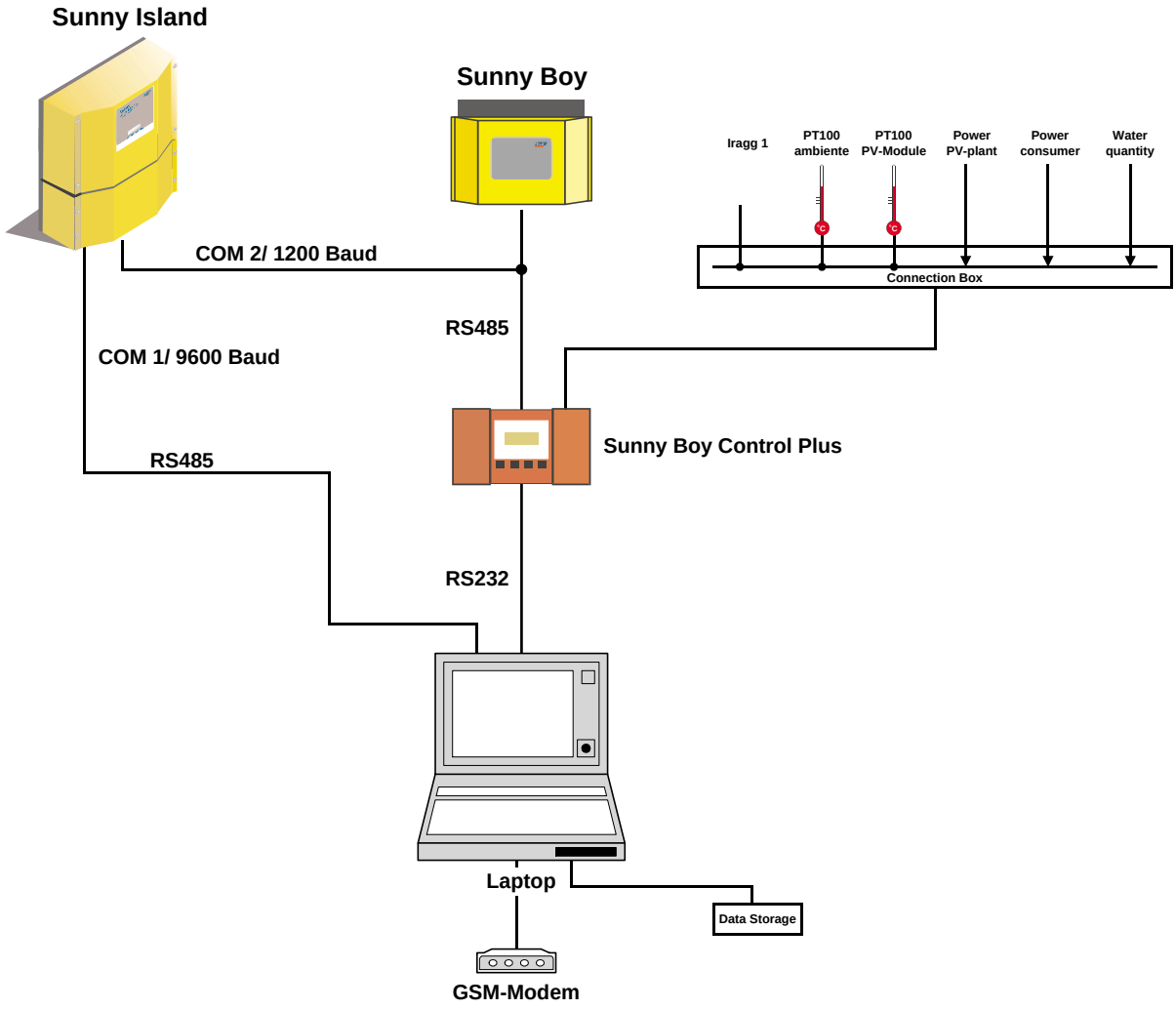

Fig. 3.21: Data communication with serial interface



Please read chapter 8.3 carefully!

3.7.5 Assignment of COM3 Interface

The service interface COM3 can only be used as an RS232 interface. It is meant for service, maintenance and necessary software updates. To be able to update the software an additional PC programme is required. Table 3.4 shows the pin assignment.

PIN	RS232 Signal
1	DCD
2	/RXD
3	/TXD
4	DTR
5	GND
6	DSR
7	RTS
8	CTS
9	RI

Table 3.4: Assignment of Sunny Island interface (COM3)

3.8 Communication in a Three-Phase Island Grid

The following figure shows which interconnecting cables can be installed for communication in a three-phase island grid to ensure convenient and troublefree operation.

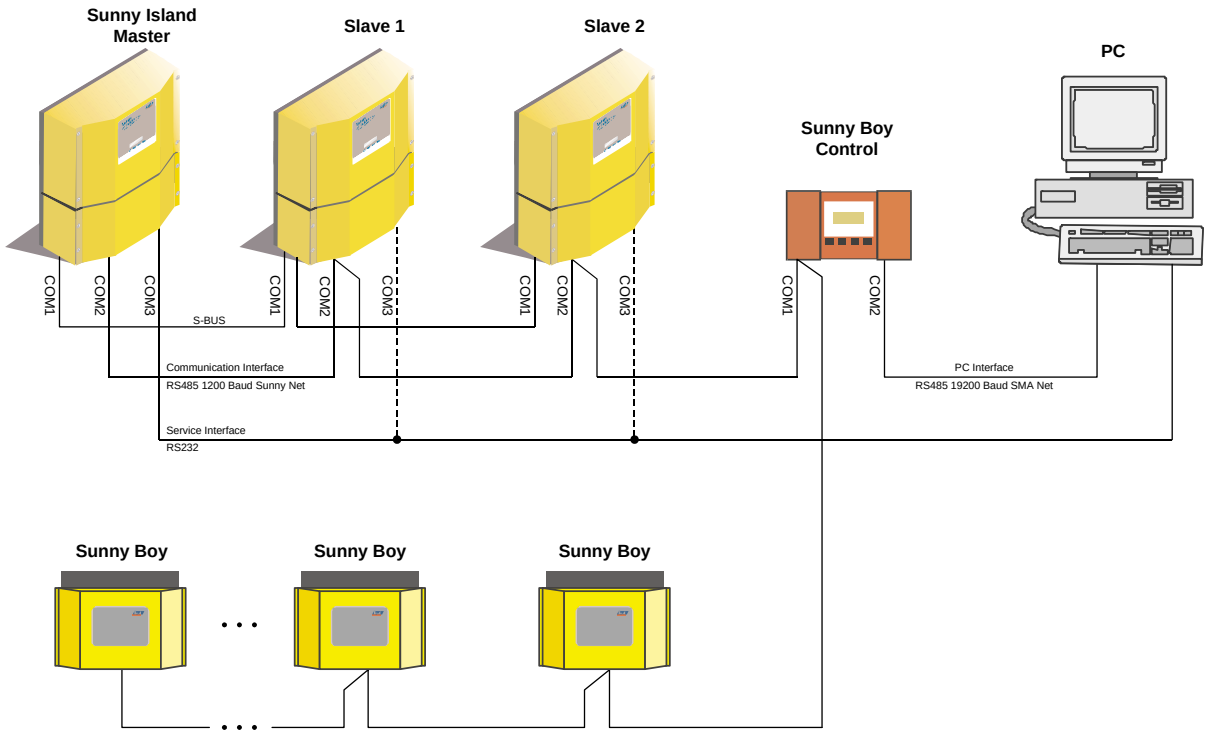

Fig. 3.22: Communication in a three-phase island grid

Please read chapter 8.3 carefully!

4 Operating Instructions

The Sunny Island is operated with keys and an eight-line graphic display. All functions of the device can be carried out and modified according to the respective user group (operator or installer).

4.1 Display and Operating Elements

The Sunny Island is operated with six keys placed below the display. A graphic display with eight lines shows the inverter status, issues error notices and shows up-to-date information on the operation of the Sunny Island.

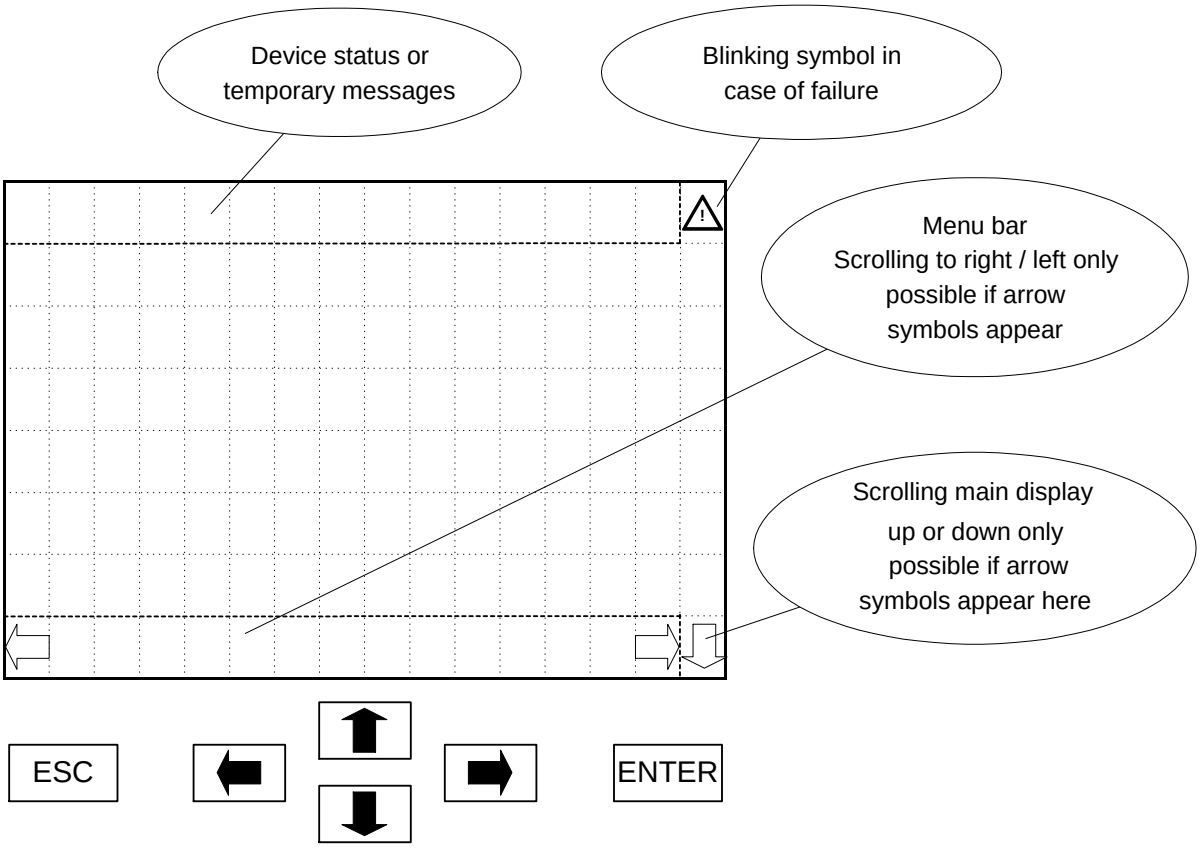

Fig. 4.1: Operation of the Sunny Island

As it is often more than six lines of information that is shown there are symbols in the lower line and the right-hand column of the display. These indicate to the user whether there are further lines beyond those shown on the display.

Symbols	Meaning
⇩,⇧	Additional lines below / above the display (scrolling main view)
⇦,⇨	Additional menus (scrolling to left, right)

Table 4.1: Meaning of symbols

4.1.1 Key Assignment

The Sunny Island is operated with six keys. Each key is assigned several functions. Which of them is active depends on the menu item selected (see Table 4.2).

Key	Function
[↑]	One line up / increase value / (special function, see chapters 4.1.2 and 4.1.3)
[↓]	One line down / decrease value / (special function, see chapters 4.1.2 and 4.1.3)
[←]	Scroll menu bar to the left
[→]	Scroll menu bar to the right
[ESC]	Interrupt / stop function / (special function, see chapters 4.1.2 and 4.1.3)
[ENTER]	Select menu item / change to edit mode / confirm entry

Table 4.2: Function of keys

4.1.2 Contrast in Display

The Sunny Island is equipped with a display that is easily legible in the standard setup even at a strong angle. If you still desire to modify the contrast you can do so starting from any menu item. Furthermore you can reinitialise the display which automatically resets the contrast to the standard value.

Keys	Function / Operation
[ESC] +[↑]	Weaker contrast / brighter display (pressing both keys simultaneously)
[ESC] +[↓]	Stronger contrast / darker display (pressing both keys simultaneously)
[←] +[→]	Reinitialisation of the display, standard contrast (simultaneously pressing both keys)

Table 4.3: Key combination to set up display

4.1.3 Return to Status Display

To facilitate navigation through the individual menus the “Data“ status display (0-1) can easily be reached starting from any menu item by simultaneously pressing:

Keys	Function / Operation
[↑] +[↓]	Return to status display and reset of password level (simultaneously pressing both keys)

Table 4.4: Key combination for fast return to status display

A return to the status display is automatically made if no keys have been pressed for approx. five minutes.



If this function is triggered the password level is reset to “Operator“ (level: 0) at the same time.

4.1.4 Edit Mode

The edit mode allows to change settings and parameters. You can enter the edit mode by pressing **[ENTER]**. Parameters that can be edited are selected by pressing **[↑]**, **[↓]**, **[←]** and **[→]**.

In edit mode the parameter that is to be set or modified is shown inversely. If the parameter is selected by pressing **[ENTER],** its value can be increased or decreased by pressing the two arrow keys **[↑]**, **[↓].** E. g. the unit’s, ten’s and hundred’s digits of three-digit parameters can be modified separately. The user can switch from one digit to the next (higher or lower) digit by pressing the **[←]** and **[→]** keys.

By pressing **[ENTER]** you can confirm changes – cancel them by pressing **[ESC]**.

4.2 Menu Structure

The operator must be prevented from unintentionally modifying essential device settings. Therefore you can only enter menus where such parameters can be modified after having entered an installer password. These protected menus are shown as shaded in Fig. 4.2.



Settings and modifications of system parameters may only be carried out by specially trained personnel!

Menus with a white background can be viewed by the operator without a password. They are used in normal operation to operate and monitor the Sunny Island and the plant components it controls.

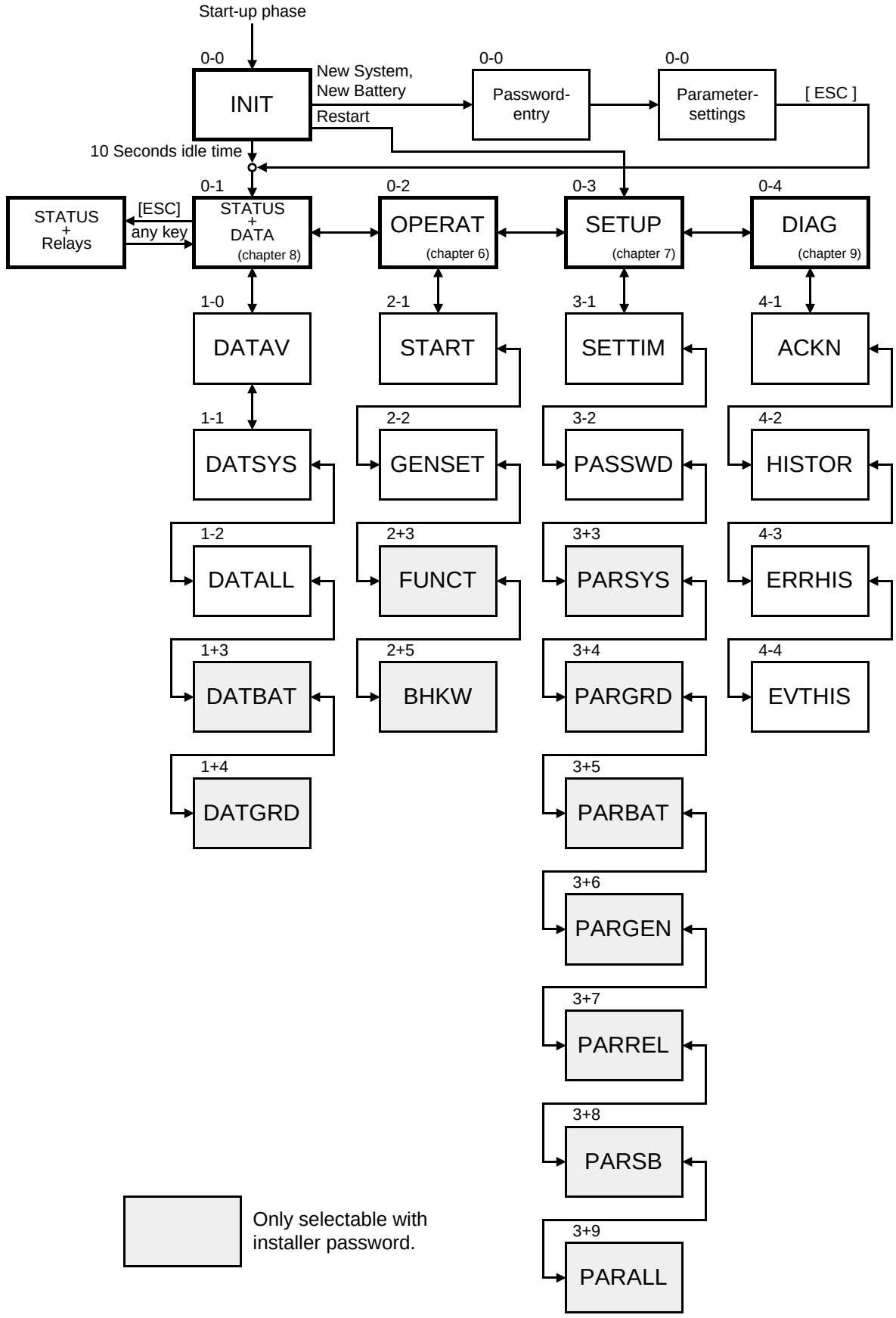

Fig. 4.2: Menu structure

As shown the menu is structured into the following main branches:

Menu branch	Description
DATA	Overview of the most important operating data; display of measured system values
OPERAT	Sunny Island operating functions and generator settings
SETUP	Setting of data and parameters
DIAG	Instructions for error diagnosis and correction, status and error history

Table 4.5: Contents of the four menu branches

The menus shown in Fig. 4.2 are described in detail in chapters 7 to 10.

5 First Commissioning of the Sunny Island

After the inverter has been installed as described in chapter 3 it can be commissioned for the first time. First insert the three batteries included in delivery into the battery tray in the terminal area of the Sunny Island. The correct polarity of the batteries is shown in each individual holder.

Make sure that both the DC fuses F1 and the AC fuses F2 of the Sunny Island are still switched off.

Now switch on the fuse switch disconnector at your lead-acid batteries if present (see chapter 3.4.2) and the DC fuse of the Sunny Island afterwards. A short signaling sound can be heard, the display illumination is switched on and the message “START FIRMW“ is displayed. During the following start-up phase the following messages are shown:



Fig. 5.1: Start-up phase of the Sunny Island



Fig. 5.2: System message of the Sunny Island

After another two seconds you can see the starting menu (see Fig. 5.3). Should your Sunny Island display a different text, please write it down. Switch the inverter off again and contact the SMA hotline (see chapter 22).

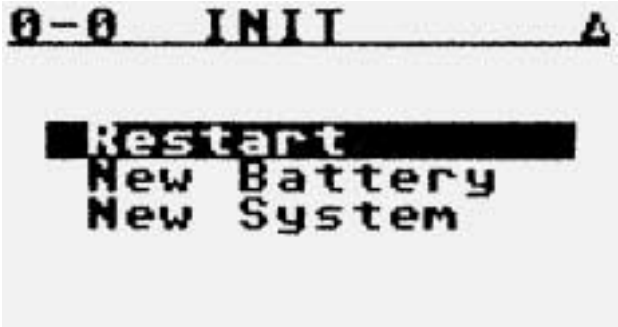

Fig. 5.3: “INIT” menu (0-0)

While the selection shown in Fig. 5.3 is displayed please do not press a key, simply wait for approximately 10 seconds.



You can skip the following menu and directly reach the menu branch “SETUP“ (0-3, see below) by confirming “Restart“ with the **[ENTER]** key in time.

You will see the following display:

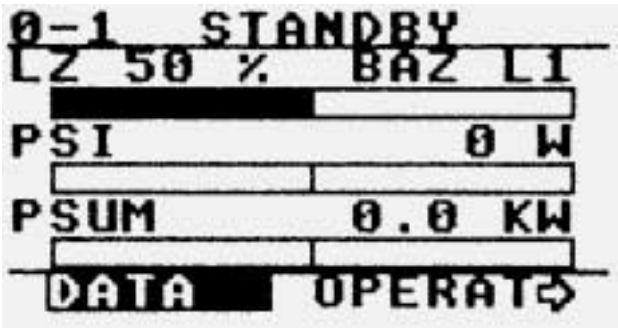

Fig. 5.4: Status / Menu selection “DATA“ (0-1)

By pressing **[➔]** twice you reach the “SETUP“ (0-3) menu. After pressing **[ENTER]** twice you reach the “SETTIM“ (3-1) menu. Set the current date and time as described in chapter 4.1.4.



This is a necessary preparation to enable the installer to enter the password correctly.

Quit the “SETTIM“ (3-1) menu by pressing **[ESC]**. Now switch the Sunny Island off again with the DC fuse. Now the installer can configure the inverter as described in the following chapters.



Being the installer you can also trigger the restart required for first configuration without switching the Sunny Island off. First enter the installer password in the menu “PASSWD“ (3-2) and then confirm “Restart“ in the “FUNCT“ (2+3) menu. Normally, however, switching the inverter off and on again should be the easier way.

6 Configuration

The Sunny Island will be used especially in those island grids which are modularly structured. The more complex such an island grid is, the higher the number of settings to be made at the Sunny Island to achieve optimum operating behavior.



The Sunny Island has to be configured with special care. Both the Sunny Island and the other connected components of the plant can be damaged due to incorrect or missing settings! Therefore the Sunny Island always has to be configured by the installer or another qualified person.

To make the process clear we distinguish between the following three reasons for configuration:

1. The Sunny Island has never before been adjusted to the plant where it is installed now. This is the case if it is newly installed or if many components are removed from or added to the plant at the same time.
   In this case a basic configuration has to be made first via the menu item “New System“ in the “INIT“ (0-0) menu after the Sunny Island has been switched on. This includes the required settings for the connected battery.

2. The lead-acid battery connected to the Sunny Island has been replaced or modified.
   In this case a basic configuration has to be made first via the menu item “New Battery“ in the “INIT“ (0-0) menu after the Sunny Island has been switched on.

3. The Sunny Island has already been configured. For optimized operation some settings are to be changed.
   This can be done in the corresponding menus practically any time. Normally the password for “level: 1“ (installer) has to be entered in the “PASSWD“ (3-2) menu.

Parameter changes should always be made in standby mode. Otherwise the corresponding operating values are changed as well immediately after pressing [ENTER]. Faulty entries cannot be corrected fast enough and may lead to damages in the plant!

The settings defined will be maintained even if the Sunny Island is switched off. Therefore you do not have to enter all plant settings again e. g. after a battery change.

The individual configuration procedures are described in detail in the following chapters.

6.1 First Configuration (“New System“)

The first configuration of the Sunny Island in a new plant or a plant that has been drastically modified should be made by selecting the menu item “New System“ in the “INIT“ (0-0) menu. To do so you require the password for “level: 1“ (installer).

After switching on the DC fuse of the Sunny Island you will reach the “INIT“ (0-0) menu (as described in chapter 5) where you select the menu item “New System“ with the arrow keys and confirm it with **[ENTER].** Now enter the password for “level: 1“ (installer).



Fig. 6.1: Display to enter password



As soon as you have entered the password correctly all settings and values acquired adaptively up to this point are overwritten with standard values!

After you have entered the password you will reach a menu where you have to set up essential parameters for the battery, the connected generator and the type of island grid to ensure proper operation.

Parameter	Default	Description
501_Cbatnom	350 Ah	Nominal capacity of the battery of 10 hours. This always has to be entered as defined in the manufacturer's instructions even if the battery has already aged! In case the manufacturer did not specify a capacity of 10 hours select the specification that is nearest to the capacity of 10 hours.
502_Bat Type	Lead acid	Lead-acid battery with... Lead acid: ... liquid electrolyte Fleece: ... electrolyte bound in fleece Gel: ... electrolyte bound in gel
503_Ubat nom	60.0 V	Nominal battery voltage. Normally 60 V have to be set. For exceptions see chapter 11.3.
506_acid density	1.28 kg/l	Nominal acid density of electrolyte, should be entered as defined in the manufacturer's instructions to accelerate its adaptive determination by the Sunny Island.
507_SOC ini	0.0 %	Initial degree of battery charge, should be entered if known to accelerate its adaptive determination by the Sunny Island. If "0.0" is set, the Sunny Island estimates the degree of battery charge based on the battery voltage.
402_Uconv nom	230.0 V	Setpoint value of AC voltage that the Sunny Island is to provide as grid-forming element (RUN_U)
403_Fconv nom	50.00 Hz (60.00 Hz)	Setpoint value of AC frequency that the Sunny Island is to provide as grid-forming element (RUN_U)
401_Phase Mode	1Phs_Single	1Phs_Single: single-phase operation, inverter is the only device 1Phs_Psingle: single-phase parallel operation with one battery per device (grid and generator not possible!) 1Phs_Mstr2: single-phase parallel operation with two devices with one single battery pack, device is master 1Phs_Mstr3: single-phase parallel operation with three devices with one single battery pack, device is master 1Phs_Slv2: single-phase parallel operation with two or three devices with one single battery pack, device is

Parameter	Default	Description	
			slave 2
		1Phs_Slv3:	single-phase parallel peroration with three devices with one single battery pack, device is slave 3
		3Phs_Mstr1Set:	three-phase operation, device is master (L1)
		3Phs_Slv1L2:	three-phase operation, device is slave (L2)
		3Phs_Slv1L3:	three-phase operation, device is slave (L3)
602_GenSet type	None	None:	No generator present in island grid
		Grid forming:	Generator forms the grid
		Mains:	Sunny Island is operated on public utility grid
		BHKW-Mains	Sunny Island is operated together with the Ecopower CHP and on the public utility grid
		BHKW-Island	Sunny Island is operated solely together with the Ecopower CHP
		Mains form	Sunny Island is operated together with a grid-forming generator and on the public utility grid
		fast Grid form	Generator is grid-forming and it is switched between the generator and the Sunny Island without interruption (special installation measures are necessary for this)
		fast Mains	The Sunny Island is operated on the public utility grid and it is possible to switch from the Sunny Island as grid-former to the public utility grid without interruption. (special installation measures are necessary for this)
		fast Mains form	The Sunny Island is operated together with a grid-forming generator and on the public utility grid. Switching takes place without interruption (special installation measure are necessary for this)
603_GenSet Inte	None	0: None:	No generator start via Sunny Island
		1: Type 1:	Autostart, relays K1+K2
		2: Type 2:	3 contacts Run / Start, relays K1, K2, K5
		3: Type 3:	3 contacts Start / Stop, relays K1, K2, K5
		4: EcoPower	Ecopower CHP
		(see also chapter 16 “Starting phase sequence of different generator types”)	

Table 6.1: Parameters to be entered for configuration via “New System“



Lead-acid batteries with a liquid electrolyte are also called non VARLA while batteries labeled VARLA (**VA**lve **R**egulated **L**ead **A**cid) or maintenance-free are normally gel or fleece batteries.

In a three-phase system one Sunny Island has to be set up as the master (3Phs_Mstr1Set) while the other two are set up as slaves (3Phs_Slv1L2 and 3Phs_Slv1L3). The settings of other interconnection systems (for example single-phase parallel") are corresponding.

You can only leave this menu by pressing **[ESC]** after you have entered all parameters (see Fig. 4.2).

Please check now referring to chapter 7.4 whether additional settings for adaptation to the island grid are required or reasonable.

Now switch the AC fuse F2 on.

Screw the lower lid onto the enclosure again after you have reconnected its PE cable.



An AC grid is only available when the Sunny Island has been set into the operating mode "RUN_U" in the "START" (2-1) menu (see chapter 7.1).

6.2 Configuration after Battery Exchange (“New Battery“)

After the lead-acid battery has been exchanged the Sunny Island has to be reconfigured. To do so select the menu item “New Battery“ in the “INIT“ (0-0) menu. You require the password for “level: 1“ (installer).

After you have switched on the Sunny Island DC fuse you will reach – as already known from chapter 5 – the “INIT“ (0-0) menu where you select the menu item “New Battery“ with the arrow keys and confirm this with **[ENTER]**. Now enter the password for “level: 1“ (installer).



Fig. 6.2: Display to enter password

In contrast to configuration via “New System“, only those settings that concern the battery are reset after correctly entering the password.

After entering the password you will reach a menu where selected essential parameters for the exchanged battery have to be set.

Parameter	Default	Description
501_Cbatnom	350 Ah	Nominal capacity of the battery of 10 hours. This always has to be entered as defined in the manufacturer's instructions even if the battery has already aged! In case the manufacturer did not specify a capacity of 10 hours select the specification that is nearest to the capacity of 10 hours.
502_Bat Type	Lead acid	Lead-acid battery with... Lead acid: ... liquid electrolyte Fleece: ... electrolyte bound in fleece Gel: ... electrolyte bound in gel
503_Ubat nom	60.0 V	Nominal battery voltage. Normally 60 V have to be set. For exceptions see chapter 11.3.
506_acid density	1.28 kg/l	Nominal acid density of electrolyte, should be entered as defined in manufacturer's instructions to accelerate its adaptive determination by the Sunny Island.
507_SOC ini	0.0 %	Initial battery charging state, should be entered if known to accelerate its adaptive determination by the Sunny Island. If "0.0" is set, the Sunny Island estimates the degree of battery charge based on the battery voltage.

Table 6.2: Parameters to be entered for configuration via "New Battery"



Lead-acid batteries with a liquid electrolyte are also called non-VARLA while batteries labeled VARLA (**VA**lve **R**egulated **L**ead **A**cid) or maintenance-free are normally gel or fleece batteries.

You can only leave this menu again by pressing **[ESC]** after you have entered all parameters (see Fig. 4.2).

Please check now referring to chapter 7.4 whether additional settings for adaptation to the island grid are required or reasonable.

6.3 Configuration after Restart (“Restart”)

If the Sunny Island has already been fully adjusted to an island grid it does not need to be reconfigured after a restart. All settings are maintained even if the inverter is switched off.

If you still want to change parameters to optimize the system please follow the instructions below:

When you reach the “INIT“ (0-0) menu after switching on the DC fuse of the Sunny Island – as described in chapter 5 – confirm the automatic selection of “Restart“ by pressing **[ENTER]** . This will not change any of the settings already made.

You will thus reach the menu branch selection “SETUP“ (0-3) where – as described in chapter 7.4 – you can change the desired parameters in the corresponding “PARxxx“ (3+3 ... 3+9) menus after entering the installer password in the “PASSWD” (3-2) menu.

If you have not pressed **[ENTER]** early enough you will reach the menu branch selection “DATA“ (0-1). From here it is also possible to reach all menus with the installer password and change the parameters there.



Changes of parameters should always be made in standby mode. Otherwise the corresponding operating values will change immediately after pressing [ENTER]. Then incorrect entries cannot be changed fast enough and may lead to damages in the plant!

7 Operation (OPERAT)

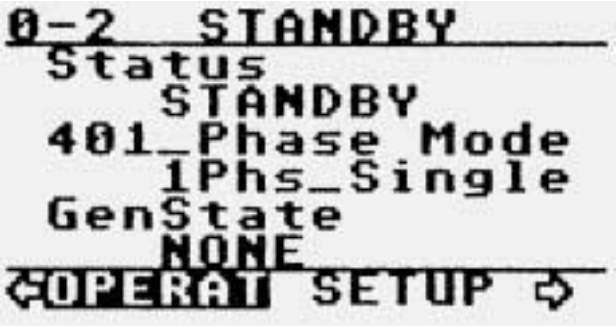

Fig. 7.1: Menu selection “OPERAT“ (0-2)

The menu selection “OPERAT“ (0-2) shows the current operating modes of the Sunny Island and of a potentially connected generator.

In islanding operation the Sunny Island provides constant voltage and frequency on the AC voltage side and uses the battery as a buffer storage. All connected consumers are supplied and feeding devices such as the Sunny Boy String Inverters and combustion aggregates can be operated on the AC voltage side.

The menu selection “OPERAT“ (0-2) is meant for operating steps in normal operation.

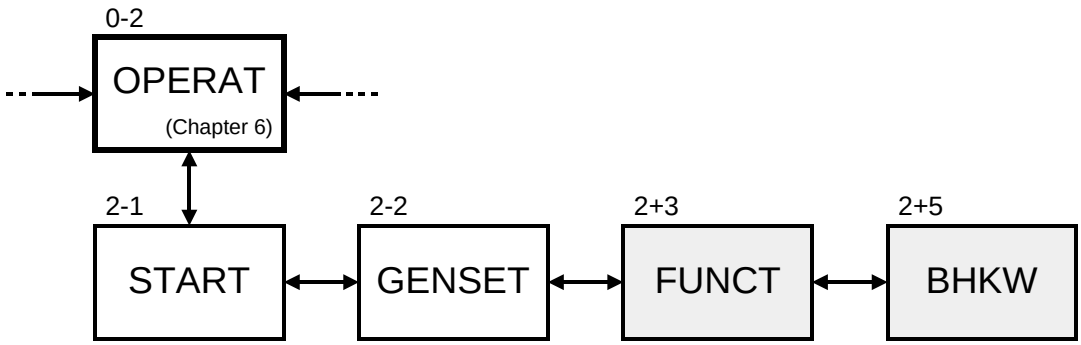

Fig. 7.2: Menu branch “OPERAT“ (0-2)

7.1 Menu “START” (2-1), Operation of the Sunny Island



Fig. 7.3: Menu “START“ (2-1)

By confirming the menu entry ”START” in the menu ”START” (2-1) the Sunny Island can be switched from standby operation to the operating mode configured before. As a default setting this is the operation as a grid-forming element (”RUN_U”) where the Sunny Island forms the island grid and supplies the connected consumers. The operating mode – grid-forming (“RUN_U”) or grid-tied (“RUN_I”) – is stipulated by setting the parameter ”602_Genset Type” in the menu ”PARGEN” (3+6).

Even in grid-tied operating mode the Sunny Island may be transitorily grid-forming. This is the case if no voltage has been found in the island grid.

By confirming the menu entry ”STOP” the Sunny Island is switched back into standby mode. In an island grid without any other grid-forming component this means that no AC voltage is on any more.

When the Sunny Island is started from the state it has been delivered in, the start-up must be made manually. The inverter can also be configured to an automatic (re-)start (see chapter 8.3).

7.2 Menu “GENSET” (2-2), Operation of Generator

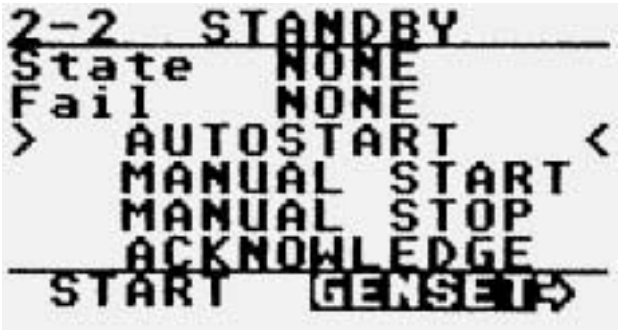

Fig. 7.4: Menu “GENSET“ (2-2)

The menu ”GENSET” (2-2) comprises functions concerning a connected generator. Such a generator can e. g. be started or stopped manually via this menu or can be set to automatic operation controlled by the Sunny Island.

The menu item “ACKNOWLEDGE” enables the operator to easily confirm error states of the generator. At the next start-up attempt the complete starting sequence is run again. This function can be useful e. g. to solve start-up difficulties by the generator.

In addition ”ACKNOWLEDGE” removes the lock-out that normally prevents another generator start for 6 hours after a configurable number of failed start-up attempts (see chapter 8.6).

The upper lines show behind ”State” and “Fail” whether a generator has been configured (see also chapter 8.6), in which operating phase it currently is and whether an error has occurred.

Name	**Description**	
State	Operating state of generator	
Fail	Fail state of generator	
601_GenSet Oper	0: Auto:	The generator is automatically started and stopped by the Sunny Island.
	1: Man. Start:	The generator is started immediately*.
	2: Man. Stop:	The generator is stopped immediately*.
	3: Man. Ackn.:	Waiting times due to failures or parameters are finished.
	* However, parameterized times are kept to.	
“PARGEN” (3+6)		
Name	**Description**	
602_GenSet Type	None:	No generator present in island grid
	Grid forming:	Generator forms the grid
	Mains:	Sunny Island is operated on public utility grid
	BHKW-Mains	Sunny Island is operated together with the Ecopower CHP and on the public utility grid
	BHKW-Island	Sunny Island is operated solely together with the Ecopower CHP
	Mains form	Sunny Island is operated together with a grid-forming generator and on the public utility grid
	fast Grid form	Generator is grid-forming and it is switched between the generator and the Sunny Island without interruption (special installation measures are necessary for this)
	fast Mains	The Sunny Island is operated on the public utility grid and it is possible to switch from the Sunny Island as grid-former to the public utility grid without interruption. (special installation measures are necessary for this)
	fast Mains form	The Sunny Island is operated together with a grid-forming generator and on the public utility grid. Switching takes place without interruption (special installation measure are necessary for this)
603_GenSet Interf	0: None:	No generator start by Sunny Island
	1: Type 1:	Autostart, relays K1 + K2
	2: Type 2:	3 contacts Run / Start, relays K1, K2, K5
	3: Type 3:	3 contacts Start / Stop, relays K1, K2, K5
	4: EcoPower	Ecopower CHP
	(see also chapter 16 “Starting phase sequence of different generator types”)	
604_GenSet Ctrl	The Sunny Island reduces its absorption of current in charging operation (RUN_I)...	
	OFF:	… not at all
	F_MAINS:	… as a function of generator frequency
	I_DIESEL:	… as a function of generator current (converter required, see

Name	Description	
		chapter 3.4.5)
	BOTH:	as a function of generator frequency and current (converter required, see chapter 3.4.5)

Table 7.1: Settings for the menu “GENSET“ (2-2)

7.3 Menu “FUNCT“ (2+3), Special Functions

This menu can only be selected after the installer password (level: 1) has been entered.

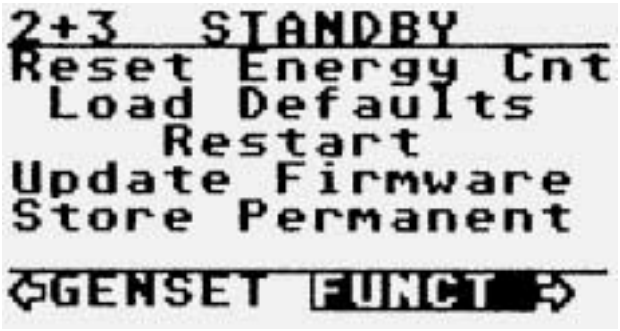

Fig. 7.5: Menu “FUNCT“ (2+3)

In this menu cumulative measured values can be reset, default parameters loaded and a firmware update can be made.

☞ For increased safety these functions can only be triggered in standby operation of the Sunny Island.

☞ How to run a firmware update is described in detail in a separate document. This will be delivered together with the PC programme required for the update.

7.4 Menu „BHKW“ (2+5), ecopower support

This menu can only be selected after the installer password (level: 1) has been entered.



Fig. 7.6: Menu „BHKW“ (2+5)

The Sunny Island can control ecopower Mini combined heat and power units of the company VALENTIN Energie- und Umwelttechnik GmbH.

If one or more CHPs are available in the system, the corresponding values must be set in the menu „PARGRD“ (3+4). The CHP is controlled via the serial RS232 interface COM3 of the Sunny Island.

The menu „BHKW“ (2+5) is primarily used for the display of the CHP´s operating state. In addition, it can be used for the commissioning of the plant to manually switch on and off the CHP with special inputs. All inputs are only valid until the menu is quit. The menu items are:

Menu Item	Meaning
BHKWSTATE	State, meaning see CHP documentation
PBHKW	Effective power, can be set
PBHKWMAX	Total power capacity of all connected CHPs
PBHKWSET	Power input, can be set
BHKWMODE	Operating mode, can be set, meaning see CHP documentation

Table 7.2: Settings in the menu „BHKW“ (2+5)

8 Settings (SETUP)

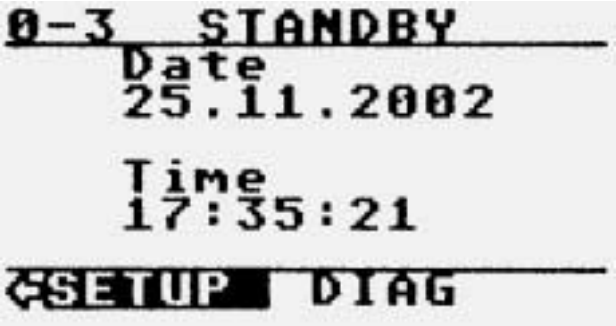

Fig. 8.1: Menu selection “SETUP“ (0-3)

In the menu branch “SETUP“ (0-3) you can set up all parameters. Usually you have to enter the installer password (level: 1) (see chapter 8.2). Only less important settings (like time and date) can be changed by the operator without having to enter the password.

The settings in this menu branch influence the behavior of the inverter and the entire system. Special care should therefore be applied when changing these settings. This should only be done by qualified personnel.

Changes of parameters should always be made in standby mode. Otherwise the corresponding operating values will change immediately after pressing [ENTER]. Faulty settings cannot be corrected fast enough and may lead to damage in the plant!

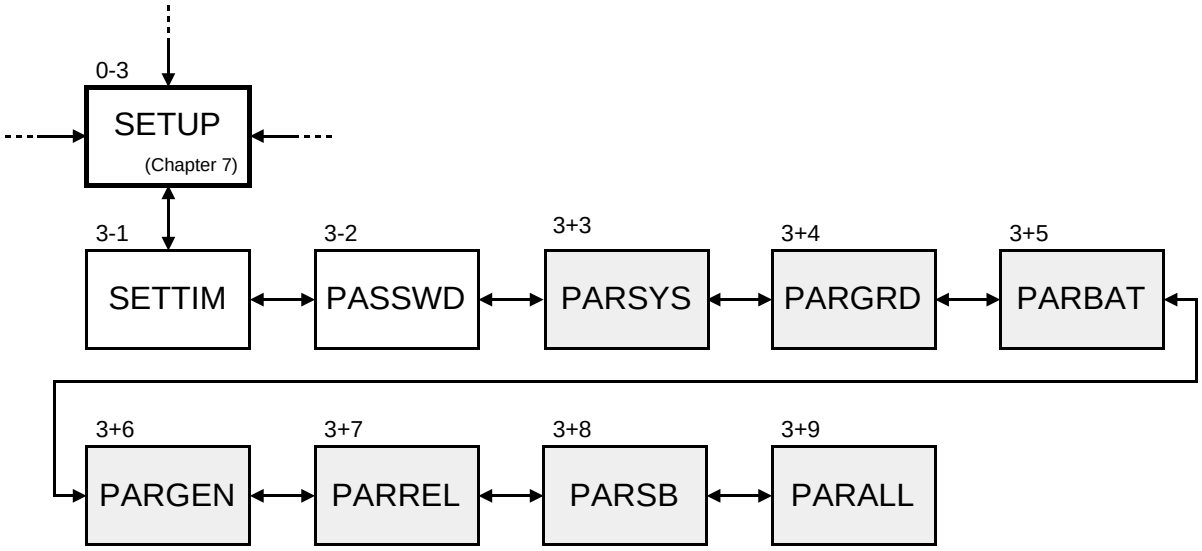

Fig. 8.2: Menu branch “SETUP“ (0-3)

8.1 Menu “SETTIM“ (3-1), Setting the System Clock

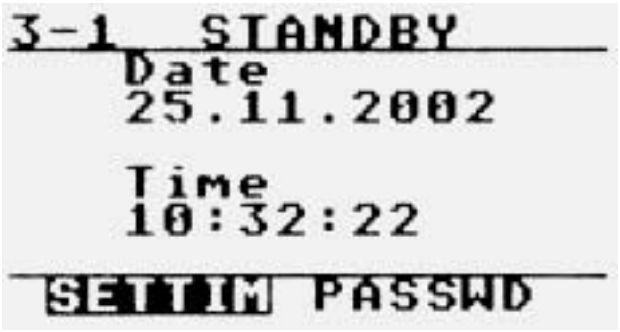

Fig. 8.3: Menu “SETTIM“ (3-1)

In this menu the integrated clock of the Sunny Island can be set. It is necessary to correctly set the time e. g. for password entry, time-dependent relay control and chronological recording of system and failure states (see chapter 10).

In the menu “SETTIM“ (3-1) shown in Fig. 8.3 switch to edit mode by pressing **[ENTER].** You can set the time and date as described in chapter 4.1.4. Finish each entry (year, month...) separately by pressing **[ENTER]** and only then change to the next setting. You can leave the menu by pressing **[ESC]**.

8.2 Menu “PASSWD“ (3-2), Entry of Password



Fig. 8.4: Menu “PASSWD“ (3-2)

Functions which seriously influence the operating behavior of the Sunny Island are password-protected. To reach the menus shown in gray in Fig. 4.2 you need an installer password (level: 1). The menus with a white background (level: 0) can be selected without having to enter a password.

Functions influencing the plant-specific settings and thus the operating safety of the Sunny Island are locked by the installer password. The system parameters can only be changed after this password has been entered.

Password protection is activated again

- if a wrong password has been entered in the menu “PASSWD“ (3-2),
- on a restart,
- when using the return function (see chapter 4.1.3),
- if no keys have been pressed for approximately 5 minutes.

8.3 Menu “PARSYS“ (3+3), Parameters System

This menu can only be selected after the installer password (level: 1) has been entered.

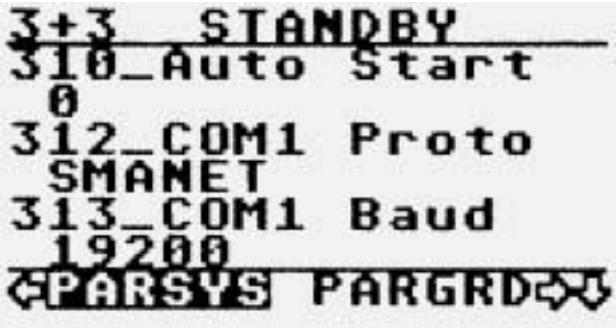

Fig. 8.5: Menu “PARSYS“ (3+3)

In the menu “PARSYS“ (3+3) you can set the parameters that concern the Sunny Island itself. Essentially these are the settings for communication and thus the interface configuration.



Especially for three-phase systems changes of these settings can lead to incorrect configuration which the Sunny Island cannot immediately detect in operation. Therefore changes of interface parameters are only implemented at the next restart of the Sunny Island (by switching it on again or via the “RESET“ (2+3) menu).

In this menu the operator can also stipulate the number of autostart attempts to be made after an error has occurred or the DC voltage has been switched on. If this value is set to 0 (state in which the inverter is delivered) the Sunny Island does not start automatically.



The start-up attempts based on low-strain operation of the battery (see chapter 14, parameter “517_BS Tstop“) are independent of the number of autostart attempts set up, even if this has been set to “0“!

“PARSYS“ (3+3)	
Name	**Description**
310_Auto Start	0 ... 255: Number of autostart attempts (0: autostart off) within 1 hour. After 1 hour operation the counter is reset. Autostart means that the Sunny Island restarts automatically app. 10 sec after an error message. In addition, the Sunny Island starts automatically after switching on the DC voltage in case the Autostart function is activated. **ATTENTION!** The Sunny Island’s low battery load mode is not affected by this setting. Running in that mode it is thus possible that the Sunny Island will start from time to time, even if this parameter is set to 0! (s. Parameter “535_State Stop T” for details)
312_COM1 Proto	Communication protocol COM1: None: Interface is not used SMANET: Interface uses SMANet protocol SUNNYNET: Interface uses SunnyNet protocol Set to SUNNYNET for communication with Sunny Boys.
313_COM1 Baud	Baud rate COM1 (bits/s) 1200, 9600, 19200 Set to 1200 for communication with Sunny Boys or Sunny Boy Controls. In three-phase operation all devices have to be set to 19200!
317_COM2 Baud	Corresponding to parameter 313 (see above) Set to 1200 for communication with Sunny Boys or Sunny Boy Controls with Sunny Boys.

Table 8.1: Settings in menu “PARSYS“ (3+3)

8.4 Menu “PARGRD“ (3+4), Parameters Grid

This menu can only be selected after the installer password (level: 1) has been entered.



Fig. 8.6: Menu “PARGRD“ (3+4)

The Sunny Island is informed about the operating values of the connected AC grid with the settings in the menu “PARGRD“ (3+4). These values are the voltage and frequency which the Sunny Island, being the grid-forming device, has to make available. In addition these are limiting values. When these limits are exceeded the Sunny Island in grid-tied operation detects this state as an error.



After changing the parameter “401_Phase Mode“ the Sunny Island must be restarted (for example in the menu “FUNCT” (2+3), see chapter 7.3).

“PARGRD“ (3+4)		
Name	**Description**	
401_Phase Mode	1Phs_Single:	single-phase operation, device is single device
	1Phs_Psingle:	single-phase parallel operation with one battery per device (no grid and generator possible!!)
	1Phs_Mstr2:	single-phase parallel operation with “two devices with one single battery pack”, device is master
	1Phs_Mstr3:	single-phase parallel operation with “three devices with one single battery pack”, device is master
	1Phs_Slv2:	single-phase parallel operation with “two or three devices with one single battery pack”, device is slave 2
	1Phs_Slv3:	single-phase parallel operation with “three devices with one single battery pack”, device is slave 3
	3Phs_Mstr1Set:	three-phase operation, device is master (L1)
	3Phs_Slv1L2:	three-phase operation, device is slave (L2)
	3Phs_Slv1L3:	three-phase operation, device is slave (L3)
402_conv nom	200 ... 260 V:	setpoint AC voltage the Sunny Island is to supply as grid-former (RUN_U)
403_Fconv nom	40 ... 70 Hz:	setpoint AC frequency the Sunny Island is to supply as grid-former (RUN_U)
404_Uext nom	150 ... 260 V:	nominal AC voltage (RUN_I)
405_Uext min	150 ... 260 V:	minimum AC voltage
406_Uext max	150 ... 260 V:	maximum AC voltage
407_Fext nom	40 ... 70 Hz:	nominal AC frequency, Sunny Island operates grid-tied (RUN_I)

“PARGRD“ (3+4)		
Name	**Description**	
408_Fext min	40 ... 70 Hz:	min. AC frequency
409_Fext max	40 ... 70 Hz:	max. AC frequency
411_Iac chrg mx	0 ... 16 A:	max. current which the Sunny Island may take from the AC grid in grid-tied operation (RUN_I, battery is charged thereby)

Table 8.2: Settings in menu “PARGRD“ (3+4)

8.5 Menu “PARBAT“ (3+5), Parameters Battery

This menu can only be selected after the installer password (level: 1) has been entered.

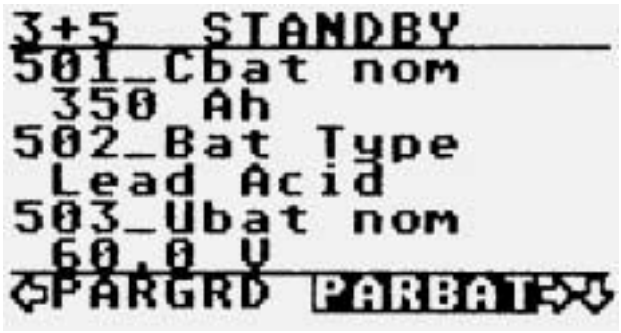

Fig. 8.7: Menu “PARBAT“ (3+5)

In the menu “PARBAT“ (3+5) the operator can change the parameters for the battery management of the Sunny Island. In addition to the characteristic values defined by the connected lead-acid battery itself such as battery capacity, battery type and nominal battery voltage, the settings for optimum maintenance of the capacity can be adjusted to the plant as well (e. g. type and frequency of full charges and regularizing charges). For more details on battery management and the required settings see chapter 11.

“PARBAT“ (3+5)	
Name	**Description**
501_Cbat nom	0 ... 10000 Ah: Nominal battery capacity of 10 hours (C10); Always enter value stated by manufacturer even if battery has already aged!
502_Bat Type	Battery type as stated by manufacturer

“PARBAT“ (3+5)		
Name	**Description**	
	0: Gel 1: Fleece 2: Lead-Acid	gel fleece liquid electrolyte
503_Ubat nom	54 ... 60 V:	Nominal battery voltage. Normally set to 60 V. For exceptions see chapter 11.3.
504_Ubat min	51 ... 84 V:	Min. permissible battery voltage
505_Ubat max	51 ... 84 V:	Max. permissible battery voltage
506_acid density	1.1 ... 1.35 kg/l:	Nominal acid density as stated by manufacturer (only taken into account if inverter is started via “New System“ or “New Battery“ (see chapter 6))
507_SOC ini	0 ... 100 %:	Initial battery state of charge (only taken into account if inverter is started via “New System“ or “New Battery“ (see chapter 6)) If set to “0“ the Sunny Island estimates the battery state of charge based on the battery voltage.
508_Tbat Sense	0: Not Installed	Battery temperature sensor is not installed
	1: Installed	Battery temperature sensor is installed
	Automatically set to 1 in case of single-phase systems or masters in three-phase systems. In all other cases set to 0. Can be set to 1 for slaves with additional temperature sensors installed.	
509_Tbat max	30 … 55 °C:	Max. battery temperature permissible
511_Bat Fan	Battery room fan installed:	
	0: Not Installed	Battery room fan not installed
	1: Installed	Battery room fan is installed
512_Acid Pump	Only for lead-acid battery with liquid electrolyte:	
	0: Not Installed:	Electrolyte circulation pump is not installed
	1: Installed:	Electrolyte circulation pump is installed.
	By selecting “Installed“ the electrolyte circulation pump is switched on depending on the settings of parameters 513 to 516. Irrespective of the battery values, however, there is at least one and maximum 9 circulations a day.	
513_Circ time	1 ... 3600 s:	Run time of electrolyte circulation
516_Circ Qd	0.1 ... 50.0 %:	Electrolyte circulation is triggered as soon as the battery has been charged with the corresponding ampere hours related to its capacity (cumulative).
518_tset full	1 ... 180 d:	Time period after which full charge is to be made.
519_tset equal	7 ... 365 d:	Time period after which equalizing charge is to be made.
520_U float	2.2 ... 2.4 V:	Float charge voltage per cell
521_tVR charge	1 ... 600 min:	Charging time for normal charge (with gel or fleece batteries, see “502_Bat Type”).

“PARBAT“ (3+5)		
Name	**Description**	
522_tVR full	1 ... 20 h:	Charging time for full charge (with gel or fleece batteries, see “502_Bat Type”):
523_tVR equal	1 ... 48 h:	Charging time for equal charge (with gel or fleece batteries, see “502_Bat Type”).
524_UVR charge	2.25 ... 2.6 V:	Charging voltage normal charge per cell (with gel or fleece batteries, see “502_Bat Type”) Please follow manufacturer’s instructions.
525_UVR charge full	2.25 ... 2.6 V:	Charging voltage full charge per cell (with gel or fleece batteries, see “502_Bat Type”). Please follow manufacturer’s instructions.
526_UVR charge equal	2.25 ... 2.6 V:	Charging voltage equalizing charge per cell (with gel or fleece batteries), see “502_Bat Type”) Please follow manufacturer’s instructions.
527_tcharge	1 ... 600 min:	Charging time for normal charge (with lead acid battery, see “502_Bat Type”)
528_tcharge full	1 ... 20 h:	Charging time for full charge (with lead acid battery, see “502_Bat Type”).
529_tcharge equal	1 ... 48 h:	Charging voltage for equalizing charge (with lead acid battery, see “502_Bat Type”)
530_Ucharge	2.29 ... 2.7 V:	Charging voltage for normal charge per cell (with lead acid battery, see “502_Bat Type”) In case of electrolyte circulation pump installed the value should be reduced to 2.45 V. Please follow manufacturer’s instructions.
531_Ucharge full	2.25 ... 2.7 V:	Charging voltage for full charge per cell (with lead acid batteries, see “502_Bat Type”) In case of electrolyte circulation pump installed the value should be reduced to 2.45 V. Please follow manufacturer’s instructions.
532_Ucharge equal	2.25 ... 2.7 V:	Charging voltage for equalizing charge per cell (with lead acid battery, see “502_Bat Type”) Please follow manufacturer’s instructions.
533_Stdby t beg	0 ... 23 h:	Beginning of period when low-strain operation of battery is permissible (see “535_Stat StopT”)
534_Stdby t end	0 ... 23 h:	End of period when low-strain operation of battery is permissible (see “535_Stat StopT”)
535_State StopT	L4 ... O3:	In case of deep-cycle discharge the device will switch off to reduce strain on the battery, if no charging current of a minimum of 1 A flows into the battery for more than 5 minutes within the defined time period (see also “533_Stdby t beg”, „534_Stdby t end“). The low battery load mode is always activated, when one battery state lower is reached. However, from 6 am to 6 pm the Sunny Island attempts to switch on

“PARBAT“ (3+5)	
Name	**Description**
	every four hours.
536_Fan on del	0 ... 1440 min: ON delay for battery room fan In order to use this setting, “511_Bat Fan” must be set to “Installed“
537_Fan off del	0 ... 360 min: OFF delay for battery room fan In order to use this setting, “511_Bat Fan” must be set to “Installed“
538_loss nom	Specific leakage current of battery during float charge at 20 °C 100 ... 0 mA per 100 Ah Approximate values: 30 mA/100 Ah for new batteries 80 mA/100 Ah for batteries strongly aged This value is NOT automatically determined by the Sunny Island. Battery management can therefore be optimized by manually adjusting the value from time to time.

Table 8.3: Settings in menu “PARBAT“ (3+5)

8.6 Menu “PARGEN“ (3+6), Parameters Generator

This menu can only be selected after the installer password (level: 1) has been entered.

In the menu “PARGEN“ (3+6) the operator can change the parameters for a connected generator. Under the parameter “602_GenSet Type“ the type of starting procedure can be defined. The Sunny Island provides three different starting procedures (see Fig. 16.1). The individual time periods within these procedures can also be set in the menu “PARGEN“ (3+6).

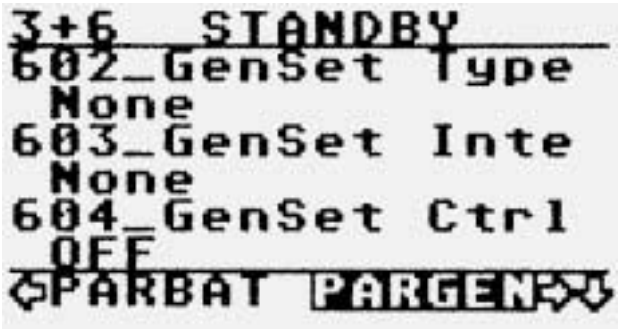

Fig. 8.8: Menu “PARGEN“ (3+6)

“PARGEN“ (3+6)		
Name	**Description**	
602_GenSet Type	None:	No generator present in island grid
	Grid forming:	Generator forms the grid
	Grid tied:	Sunny Island has to form the grid
	Mains:	Sunny Island is operated on public utility grid
	BHKW-Mains	Sunny Island is operated together with the Ecopower CHP and on the public utility grid
	BHKW-Island	Sunny Island is operated solely together with the Ecopower CHP
	Mains form	Sunny Island is operated together with a grid-forming generator and on the public utility grid
	fast Grid form	Generator is grid-forming and it is switched between the generator and the Sunny Island without interruption (special installation measures are necessary for this)
	fast Mains	The Sunny Island is operated on the public utility grid and it is possible to switch from the Sunny Island as grid-former to the public utility grid without interruption (special installation measures are necessary for this).
	fast Mains form	The Sunny Island is operated together with a grid-forming generator and on the public utility grid. Switching takes place without interruption (special installation measures are necessary for this)
603_GenSet Interf	None:	no generator start by Sunny Island
	Type 1:	Autostart, relays K1+K2
	Type 2:	3 contacts run / start, relays K1, K2, K5
	Type 3:	3 contacts run / Stopp, relays K1, K2, K5
	EcoPower	Ecopower CHP
	(see also chapter 16 “Starting phase sequence of different generator types”)	

“PARGEN“ (3+6)	
Name	**Description**
604_GenSet Ctrl	The Sunny Island reduces its current input in charge operation (RUN_I) ... 0: OFF: ... no reduction 1: F_MAINS: ... reduction as a function of generator frequency 2: I_DIESEL: ... as a function of generator current (converter required, see chapter 3.4.5) 3: BOTH: ... as a function of generator frequency and current (converter required, see chapter 3.4.5)
605_GenStRetr	0 ... 30: Max. number of attempts to start the generator, before the state “Fail Locked“ is reached (see also parameter 618). After the minimum run-time of the generator has expired, the counter will be reset.
606_CurTrfRatio	0 ... 1000 A per 5 A: Current transformer ratio (in A per 5 A) for measurement of generator current
607_Igen max	0 ... 500 A: Max. generator current (per phase)
610_tGen glow	1 ... 180 s: Length of time the relay is controlled to glow up the generator
611_tGen crank	1 ... 60 s: Length of time the relay is controlled to crank the generator
612_tGen warm	1 ... 900 s: Warm-up time of generator
613_tGen minrun	1 ... 180 min: Minimum run time of generator
614_tGen cool	1 ... 900 s: Cooling time of generator
615_tGen stop	1 ... 180 s: Length of time the relay is controlled to stop the generator
616_tGen lock	1 ... 180 min: Period of time the generator – after having been stopped - cannot be restarted via the Sunny Island (can be shortened by acknowledgement in the “GENSET“ (2-2) menu)
617_tGen fail	1 ... 180 min: Period of time the generator cannot be restarted via the Sunny Island after a generator failure (can be shortened by acknowledgement in the “GENSET“ (2-2) menu)
618_tGen faillock	1 ... 168 h: Period of time the generator cannot be restarted via the Sunny Island after a certain number of failures as defined in “605_GenStRetr“ has occurred during start-up (can be shortened by acknowledgement in the “GENSET“ (2-2) menu)
625_PldL GenOn	-100 … 100 %: Switch-on threshold in % of the nominal power at one phase for the power-related generator start or the power-related relays (only K5 or K6). If the relays shall be switched in relation to the power, the parameters “705_Man K5” and/or “706_Man K6” must be set to “LOAD“
626_PldL GenOff	-100 … 100 %: Switch-off threshold in % of the nominal power at one phase for the power-related generator start or the power-related relays (only K5 or K6) If the relays shall be switched in relation to the power, the parameters “705_Man K5” and/or “706_Man K6” must be set to “LOAD“

"PARGEN" (3+6)		
Name	**Description**	
627_PldS GenOn	- 100 … 100 %	Switch-on threshold in % of the nominal power based on the cumulative power within the three-phase sys tem for the power-related generator start or the power-related relays (only K5 or K6). If the relays shall be switched in relation to the power, the parameters "705_Man K5" and/or "706_Man K6" must be set to "LOAD"
628_PldS GenOff	- 100 … 100 %	Switch-off threshold in % of the nominal power based on the cumulative power within the three-phase sys tem for the power-related generator start or the power-related relays (only K5 or K6). If the relays shall be switched in relation to the power, the parameters "705_Man K5" and/or "706_Man K6" must be set to "LOAD"
629_TavgLdLx	5 … 60 s	Averaging time for the power calculation per phase (see also "625_PldL GenOn" and "626_PldL GenOff")
630_TavgLdSum	1 … 20 min	Averaging time for the calculation of the cumulative power within the three-phase system (see also "627_PldS GenOn" and "628_PldS GenOff")
631_PldLzMin	0 … 100 %	Lower limit for the charging state, when the Ecopower CHP will always be started
632_PldLzMax	0 … 100 %	Upper limit for the charging state, when the Ecopower CHP will never be started
633_PConsMin	0 … 2000 W	Power limit for the load power (cumulative power averaged over all three phases within the time period of the parameter "630_TavgLdSum"), that has to be exceeded, in order to start the Ecopower CHP even in the case of charging states between "631_PldLzMin" and "632_PldLzMax".
634_PConsMax	0 … 10.000 W	Upper limit for the load power (cumulative power averaged over all three phases within the time period of the parameter), when the Ecopower CHP will already be started in the case of a charging state of "632_PldLzMax".
635_PChargeMax	0 … 16.000 W	Setpoint for the charging power, that the Sunny Island obtains from the Ecopower CHP.
636_PDump1	0 … 8.000 W	Power of Dumpload 1, that has to be connected to the relay K1 of the Sunny Island during the operation with the ecopower CHP. ("701_Man K1" = Auto)
637_PDump2	0 … 8.000 W	Power of Dumpload 2, that has to be connected to the relay K6 of the Sunny Island during the operation with the Ecopower CHP. ("706_Man K6" = Auto)
638_PBHKWMin	0 … 4.000 W	Minimum power of the Ecopower CHP
639_PBHKWMax	0 … 10.000 W	Maximum power of the Ecopower CHP
640_BHKW_Ton	0 … 10.000 s	Minimum run-time of the Ecopower CHP
641_BHKW_Toff	0 … 10.000 s	Minimum pause time of the Ecopower CHP

“PARGEN“ (3+6)		
Name	**Description**	
642_BHKW_Tmax	0 …20.000 s	Maximum run-time of the Ecopower CHP in mode 2 (fast control)
644_PldOnLx	0 … 3300 W	Requirement of the Ecopower CHP when the load at one phase has been exceeded
710 ... 715	Conditions for generator start: see chapters 8.7 and 11.	

Table 8.4: Settings in menu “PARGEN“ (3+6)

8.7 Menu “PARREL“ (3+7), Parameters Relays

This menu can only be selected after the installer password (level: 1) has been entered.



Fig. 8.9: Menu “PARREL“ (3+7)

In the menu “PARREL“ (3+7) you can define how the relays K1 to K8 (available as accessories) are to be controlled. In the state the Sunny Island is delivered in, none of the relays is controlled (setting “OFF“).

Manual

Each relay can be switched on and off individually any time by selecting the setting “ON“ or “OFF“.

☞ After a restart the setting “ON“ is reset to “OFF“ for safety reasons. In manual relay control (“ON“, “OFF“) the automatic control by the Sunny Island is made invalid.

As a function of battery charge degree

There is also the possibility to switch the relays depending on the battery state (see chapter 11.2). Usually all relays can be used for this purpose unless they have been assigned special functions (see below). To set a relay control depending on the battery state please follow the steps below. (Settings for the relay K1 are described. Settings for the relays K2 to K8 are to be made accordingly.)

- Under “712_K1 On t1“ define the battery state which has to be reached to make the Sunny Island switch on relay K1.

- Under “713_K1 Off t1“ define the battery state which has to be reached to make the Sunny Island switch off relay K1. Depending on the device you want to control with this relay it can make sense to define a higher or a lower battery state.



The fact whether the battery state for switch-on is higher or lower than the battery state for switch-off determines when a relay is actually switched.

As shown in Fig. 8.10 there are two different modes: “Consumer type“ (switch-on limit if battery state is above switch-off limit) and “Feeder type“ (switch-on limit if battery state is below switch-off limit). If the same battery state is set for both the switch-on and the switch-off limits the relay is controlled as for the “Consumer type“.

- If the same values have been entered under the parameters “710_K1 t2 begin“ and “711_K1 t2 end“ a simple setting to a battery state-dependent control of this relay has already been finished. Often, however – especially in island grids supplied by PV – an operating mode is desired where the devices are controlled depending on the battery state, but additionally also depending on the time of the day. To this end it is possible to define a second time period (“special time period t2“, from “710_K1 t2 begin“ to “711_K1 t2 end“). For this second period, battery states for switching of the relay can be selected again. The setting is made accordingly as described above, but with the parameters “714_K1 On t2“ and “715_k1 Off t2“.

- To activate the battery state-dependent relay control the parameter “701_Man K1“ has to be set to “AUTO“.

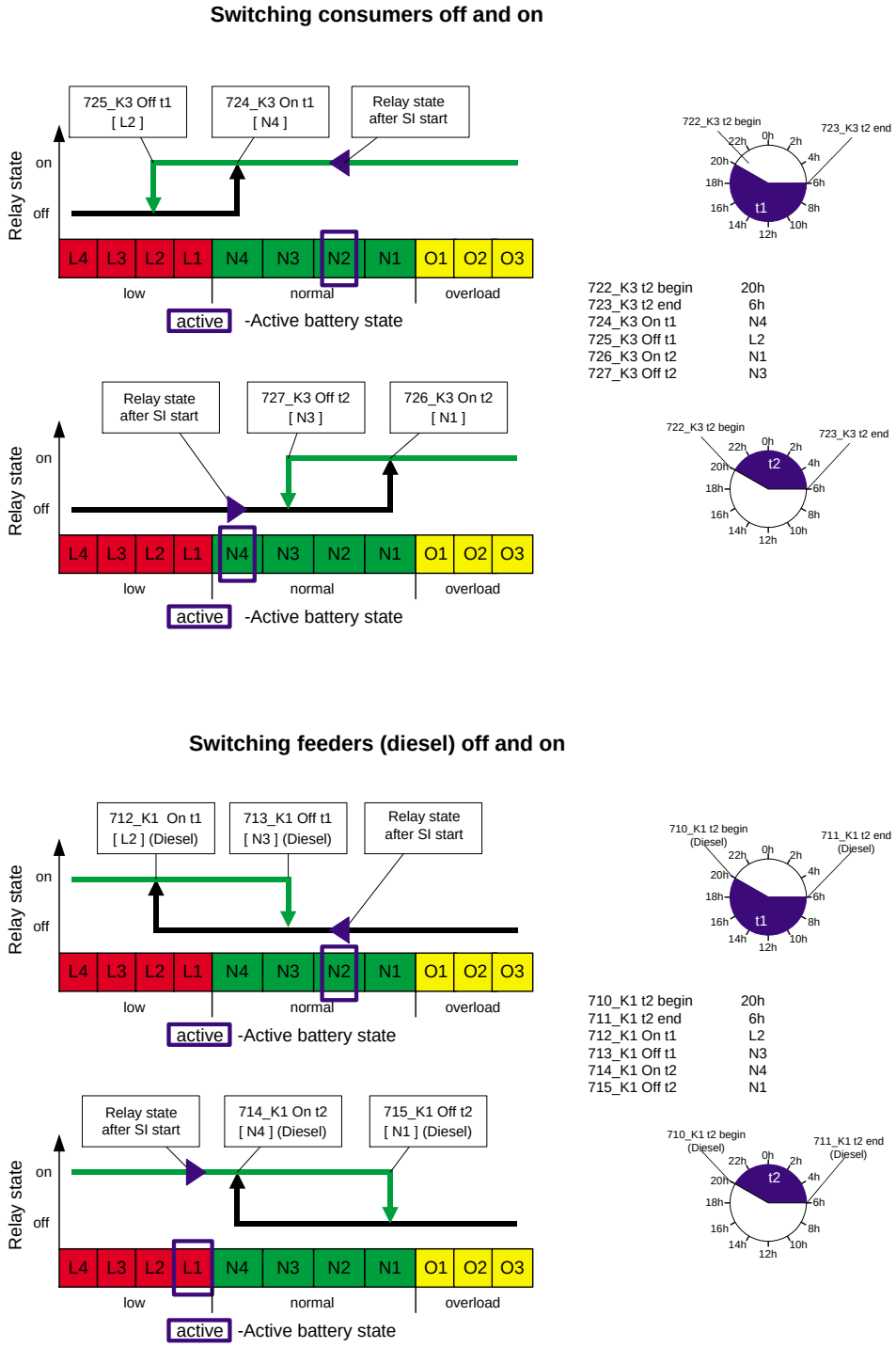

Fig. 8.10: Setting of relays as a function of battery charge degree

Special tasks

Some of the relays can be assigned special tasks. This depends on the settings in other menus:

Relay	Special function	Configurable in menu
K1	Generator start	“PARGEN“ (3+6)
	“Dumpload 1” (for ecopower mini CHP)	“PARGEN“ (3+6)
K2	Contactor control generator <> island grid	“PARGEN“ (3+6)
K3	Contactor control grid <> island grid	“PARGEN“ (3+6)
	Warming up/starting generator (up to BFR 1.09)	“PARGEN“ (3+6)
K4	Contactor control Sunny Island <> island grid	“PARGEN“ (3+6)
K5	Operating state indicator	“PARGEL“ (3+7)
	Power-related switching	“PARREL“ (3+7)
	Measuring-point selection	“PARGEN“ (3+6)
	Warming up/starting generator (BFR 1.10 up to BFR 1.49)	“PARGEN“ (3+6)
K6	Operating state indicator	“PARREL“ (3+7)
	Power-related switching	“PARREL“ (3+7)
	Warming up/Starting generator (from BFR 1.50)	“PARGEN“ (3+6)
	“Dumpload 2” (for ecopower mini CHP)	“PARGEN“ (3+6)
K7	Battery room fan	“PARBAT“ (3+5)
K8	Electrolyte pump	“PARBAT“ (3+5)

Table 8.5: Special functions of relays

A special function is normally assigned indirectly. If e. g. a generator “type 2“ has been set in the “PARGEN“ (3+6) menu, the relay K1 is automatically assigned switching on the ignition, K2 is assigned the grid contactor of the generator and K5 the cranking of the generator.

The special functions of the individual relays are in turn activated by setting the respective parameters (701 to 708) to “AUTO“. Only the special function “Operating state indicator“ can be directly selected with these parameters.



If a relay has been assigned both a battery state-dependent control and a special function, only the special function is performed!



The relays are controlled by the Sunny Island in regular operation only. If the Sunny Island is switched into standby mode, the AC voltage is missing or an error state occurs, all relays are dropped out after a short pe-

riod of time.

“PARREL“ (3+7)		
Name	**Description**	
701_Man K1	Operating mode of relay K1	
	OFF:	Switching relay K1 off
	ON:	Switching relay K1 on
	AUTO:	Sunny Island automatically controls relay K1.
702_Man K2	as parameter 701, but for K2	
703_Man K3	as parameter 701, but for K3	
704_Man K4	as parameter 701, but for K4	
705_Man K5	Operating mode of relay K5	
	OFF:	Switching relay K5 off
	ON:	Switching relay K5 on
	AUTO:	Sunny Island automatically controls relay K5.
	RUN:	Relay is only switched on when Sunny Island is running.
	RUN_U:	Relay is only switched on when Sunny Island is in grid-forming operation.
	RUN_I:	Relay is only switched on when Sunny Island is in grid-tied operation.
	HD_CTRL:	Relay is switched during transfer from grid-forming to grid-tied operation.
	TK_CTRL:	Relay is switched during transfer from grid-tied to grid-forming operation.
	HDTK_CTRL:	Relay is switched during any transfer from grid-tied to grid-forming operation or vice versa.
	GEN_MANU:	Relay is switched if generator has already been started before the Sunny Island.
	LOAD:	Relay is switched in relation to load (see parameter 625 to 630)
706_Man K6	as parameter 705, but for K6	
707_Man K7	Operating mode of relay K7	
	OFF:	Switching relay K7 off
	ON:	Switching relay K7 on
	AUTO:	Sunny Island automatically controls relay K7.
708_Man K8	as parameter 707, but for K8	
710_K1 t2 begin	0 ... 23 h:	Begin of special time period t2 for K1
711_K1 t2 end	0 ... 23 h:	End of special time period t2 for K1

“PARREL“ (3+7)	
Name	**Description**
712_K1 On t1	L4 ... O3: Battery state where K1 is switched on.
713_K1 Off t1	L4 ... O3: Battery state where K1 is switched off.
714_K1 On t2	as parameter 712, but in special time period t2
715_K1 Off t2	as parameter 713, but in special time period t2
716_K2 t2 begin	as parameter 710, but for K2
717 … 757	as above, but for K2 to K8

Table 8.6: Settings in the menu “PARREL“ (3+7)

8.8 Menu “PARSB“ (3+8), Parameters Sunny Boy

This menu can only be selected after the installer password (level: 1) has been entered.



Fig. 8.11: Menu “PARSB“ (3+8)

You should define settings in the menu “PARSB“ (3+8) if there are Sunny Boy inverters in the island grid which are to be controlled by the Sunny Island via the RS485 interface (COM2).

“PARSB“ (3+8)		
Name	**Description**	
801_Sunny Boys	Not installed:	Sunny Island is not to control Sunny Boys.
	Installed:	Sunny Island is to control Sunny Boys.
	Inst. Mains:	Sunny Island is to control Sunny Boys only if grid feeding is not possible.

Table 8.7: Settings in the menu “PARSB“ (3+8)

8.9 Menu “PARALL“ (3+9), all Parameters

This menu can only be selected after the installer password (level: 1) has been entered.

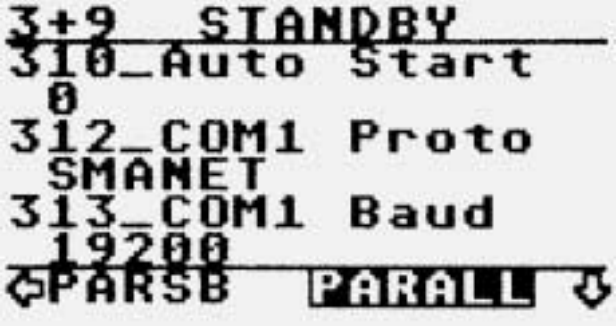

Fig. 8.12: Menu “PARALL“ (3+9)

The menu “PARALL“ (3+9) comprises all parameters from the “PARxxx“ menus described in the chapters above. Therefore you can change the parameters from different areas in this menu without having to select the corresponding special menu. E. g. this can facilitate configuration of newly installed, complex island grid plants.

As it makes no difference whether parameters are changed in this general menu or in the respective special menu, it is important as well to set up the parameters with special care and only with the required technical know-how.



Special care has to be applied when changing the settings. Incorrect or missing settings can lead to damage to the Sunny Island as well as to the connected plant components! Settings must always be changed by the installer or another qualified person.

9 Operating Data (DATA)

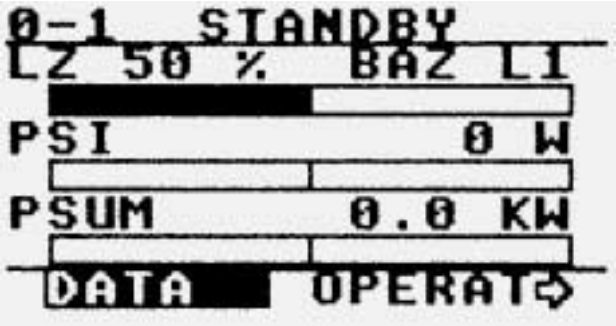

Fig. 9.1: STATUS and menu selection “DATA“ (0-1)

What makes the Sunny Island so special are its comprehensive control and powerful system management. For these two it is necessary to acquire the most different electrical and physical variables. The operator can access them in the menu branch “DATA“.

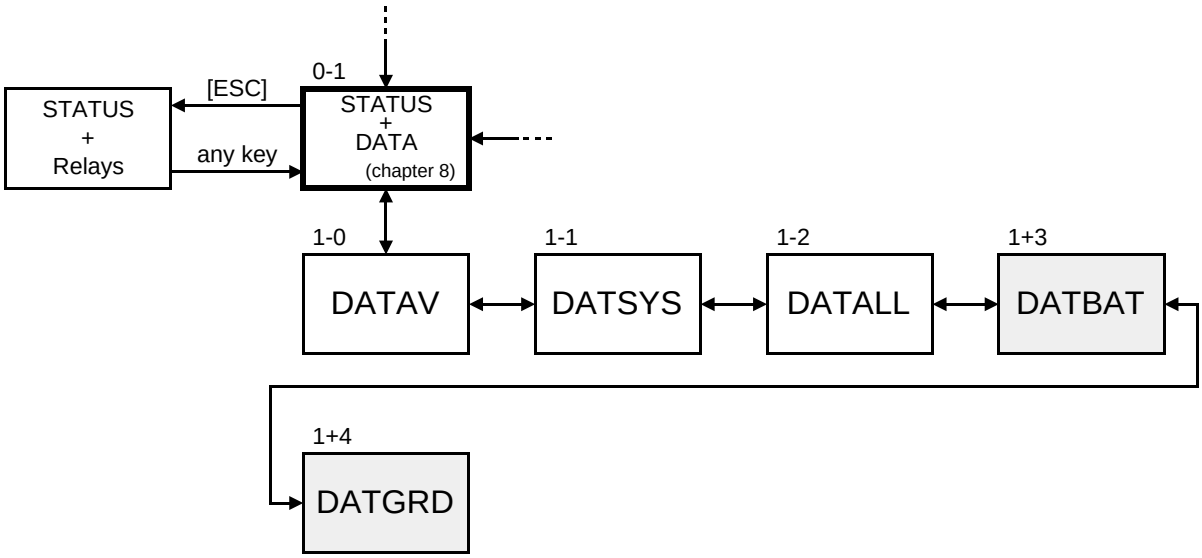

Fig. 9.2: Menu branch “DATA“

In normal operation a selection of the most important measured values is continuously shown on the Sunny Island display. In addition, the current state of the relay is displayed by pressing the **[ESC]** – button.

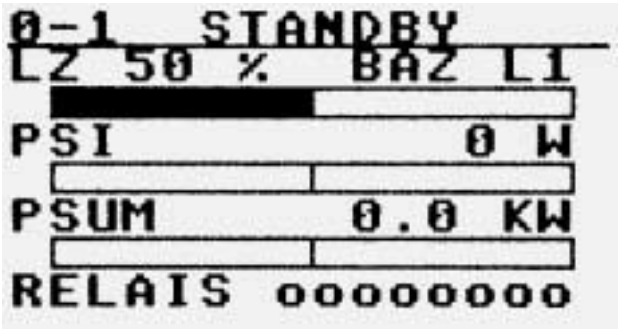

Fig. 9.3: STATUS and state of the relay

You can go back to the window „STATUS and menu selection ‚DATA' (0-1)" (see Fig. 9.1) by pressing any button.

The values displayed are:

Measured value	Description
LZ	Battery charge degree, as bar
BAZ	Battery state
PSI	AC current of Sunny Island, also as bar positive: discharging power; negative: charging power
PSUM	Cumulative AC current of connected Sunny Island (for example, in case of three-phase system), also as bar
Relais	Display of the relay state o: relay is not controlled I: relay is controlled

Table 9.1: Spot values shown in "DATA" (0-1)

9.1 Menu „DATAV“ (1-0), Overview of Measured Values

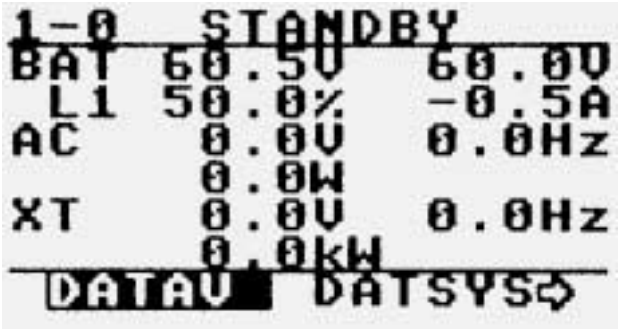

Fig. 9.4: Menu „DATAV“ (1-0)

An overview of the current values is displayed in the menu „DATAV“ (1-0), similarly to the both menu STATUS. Whereas the STATUS display rather serves as a fast function control, the menu „DATAV“ is a support for installation and optimization of the system.

The values displayed are:

Section	Description
BAT	Nominal battery voltage, actual battery voltage
	Battery state, battery charge degree, battery current (positive: battery is charged, negative: battery is discharged
AC	Voltage at the AC output port of the Sunny Island, frequency of the AC output voltage
	Power of the Sunny Island (positive: battery is discharged, negative: battery is charged)
XT	Voltage at the Diesel-Sync input port of the Sunny Island, frequency of the Diesel-Sync voltage
	Power of the generator (measured via Diesel-Sync input port and Diesel-current terminal)

Table 9.2: Values shown in „DATAV“ (1-0)

9.2 Menu “DATSYS“ (1-1), System Data

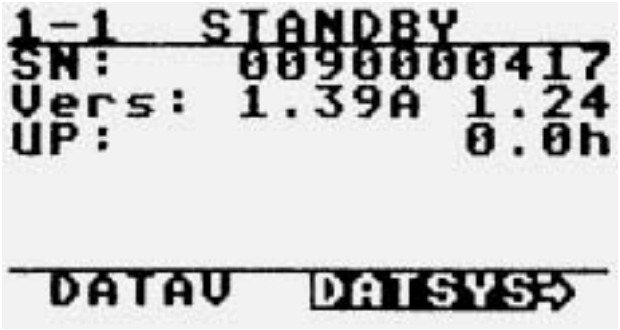

Fig. 9.5: Menu “DATSYS (1-1)

The menu “DATSYS (1-1)“ shows internal data of the Sunny Island. These are the serial number, the release number of the firmware version for system management and control as well as the so-called up-time (total operating hours).

9.3 Menu “DATALL“ (1-2), Overall Plant Data

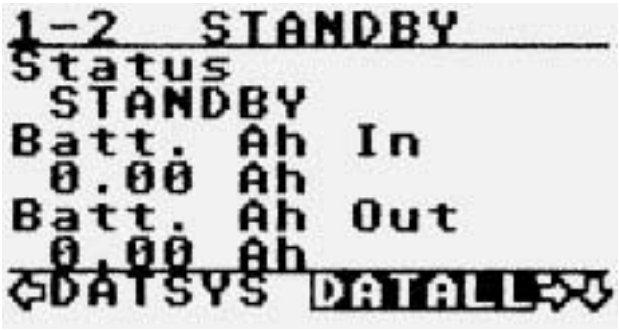

Fig. 9.6: Menu “DATALL“ (1-2)

Table 9.3 explains only those plant data which are visible to the operator (password level: 0). You will find a complete list of all plant data in the appendix.

“DATALL“ (1-2)	
Name	**Description**
Status	Current operating mode

Bat State	Current battery charge degree (battery state, see chapter 11.2)
SOC act	Current battery charge degree in per cent
Pbat Sum	Total battery power (three phases)
Ibat Sum	Total battery current (three phases)
GenState	Operating state of the generator
GenFail	Error of the generator
K1 State	Switch state of relay K1
K2 State	Switch state of relay K2
K3 State	Switch state of relay K3
K4 State	Switch state of relay K4
K5 State	Switch state of relay K5
K6 State	Switch state of relay K6
K7 State	Switch state of relay K7
K8 State	Switch state of relay K8
Fext	Frequency at input Diesel U
Uext eff	RMS value of voltage at input Diesel U
Iext eff	RMS value of current at input Diesel I
Pext	Power of generator connected to input ports Diesel U and I
Ubat mean	Mean value of battery voltage
Ibat mean	Mean value of battery current
Pbat mean	Mean value of battery power
Tbat mean	Mean value of battery temperature
Fconv	Current AC output frequency
Uconv eff	Current AC output voltage
Iconv eff	RMS value of current AC output current
Pconv	Current AC active power Sunny Island
Sconv	Current AC apparent power Sunny Island
SOC diff	Estimated error of the calculated charge degree of “SOC act”

Table 9.3: Menu “DATSYS“ (1-2), password level: 0

9.4 Menu “DATBAT“ (1+3), Battery Data

This menu can only be selected after the installer password (level: 1) has been entered.

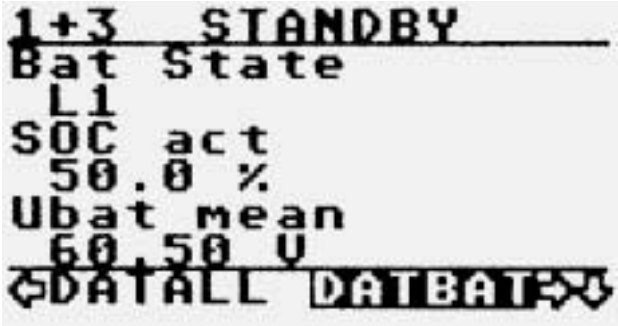

Fig. 9.7: Menu “DATBAT“ (1-3)

As there is a very large number of plant data shown in the complete (level: 1) menu “DATALL“ (1-2), the menu “DATBAT“ (1+3) only shows those data concerning the battery:

“DATBAT“ (1+3)	
Name	**Description**
Bat State	Current battery charge degree
SOC act	Battery charge degree
Ubat mean	Mean value of battery voltage
Uchrg act	Setpoint value of battery voltage
Ibat mean	Mean value of battery current
Ibat Sum	Total of battery current SI (three phases)
Tbat mean	Mean value of battery temperature
Pbat mean	Mean value of battery power
Pbat Sum	Total battery power SI (three phases)
SOC RSK	Charge degree of module open-circuit voltage calibration
SOC dff RSK	Estimated error of the charge degree “SOC RSK”
Qb RSK	Charge balance of open-circuit voltage calibration
Qbdiff RSK	Difference of charge degree calculation of open-circuit voltage calibration
Cbat act	Actual capacity
Qdn full	Charge throughput (discharge) since last full charge
Qdn equal	Charge throughput (discharge) since last equalizing charge
tpast full	Time since last full charge
tpast equal	Time since last equalizing charge
T Uconst charge	Time of constant U phase for normal charges

t Uconst full	Time of constant U phase for full charges
t Uconst equal	Time of constant U phase for equalizing charges
ChargeOper	State of battery management
SOC AHB	Charge degree of full charge degree calibration

Table 9.4: Menu “DATBAT“ (1+3)

9.5 Menu “DATGRD“ (1+4), Grid Data

This menu can only be entered after the installer password (level: 1) has been entered.



Fig. 9.8: Menu “DATGRD“ (1+4)

As there is a very large number of plant data shown in the complete (level: 1) menu “DATALL“ (1-2), the menu “DATGRD“ (1+4) only shows those data concerning the AC island grid:

“DATGRD“ (1+4)	
Name	**Description**
Uconv eff	Current grid voltage
Fconv	Current grid frequency
Iconv eff	Grid current (RMS value)
Iconv Sum	Inverter current (three phases)
Pconv	Active grid power Sunny Island
Pconv Sum	Total of active grid power Sunny Island (three phases)
Qconv	Reactive grid power Sunny Island
Qconv Sum	Total of reactive grid power SI (three phases)
Sconv	Apparent grid power Sunny Island
Sconv Sum	Total of apparent grid power Sunny Island (three phases)
Uext eff	RMS value of voltage on input Diesel U
Fext	Current grid frequency at synchronous input port
Iext eff	Current generator current (of converter)
Iext Sum	Total of generator current (three phases)

“DATGRD“ (1+4)	
Name	**Description**
Pext	Current active generator power
Pext Sum	Total of active generator power (three phases)

Table 9.5: Menu “DATGRD“ (1+4)

10 Diagnosis (DIAG)

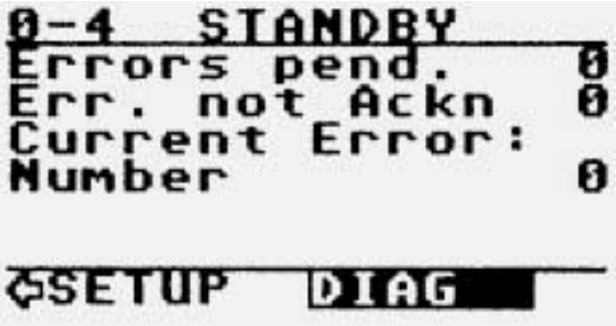

Fig. 10.1: Menu selection “DIAG“ (0-4)

The Sunny Island has a very powerful system management. It makes it possible to adjust the controlling behavior of the Sunny Island precisely to the connected island grid and its components. To be able to optimize the required settings it is helpful to have a look at the history of the plant’s behavior. However the operator should not be dependent on a PC that has to be operating all the time to be able to view these data. Therefore the Sunny Island continuously not only acquires changes of its operating state (“events“), but also any excess of a limiting value or error (“alerts“).

“Alerts“ are to be distinguished into more serious ones that the user has to confirm, and less serious ones which are merely recorded in the error list (see chapter 17). The “DIAG“ (0-4) menu selection shows the error status of the system. The menu branch itself comprises detailed lists of the latest errors and system states. For a clear distinction “events“ are marked with an “E“ in front, “alerts“ with an “A“.

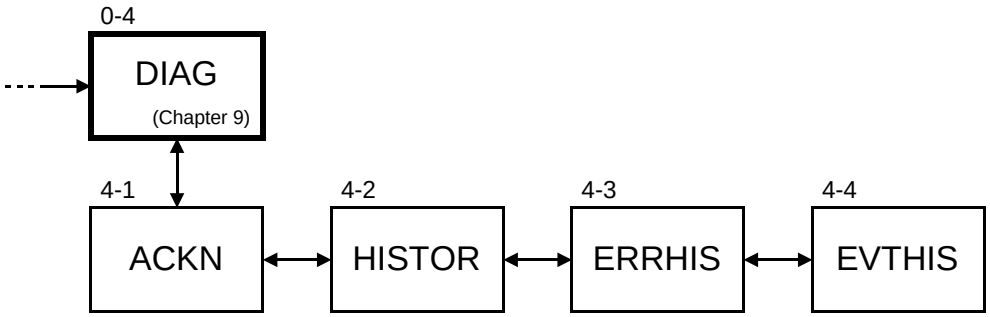

Fig. 10.2: Menu branch “DIAG“

If an error has occurred or a limiting value has been exceeded, the Sunny Island first switches to the operating state “FAULT“ for a few minutes.

Selecting the menu item “Acknowledge“ in the menu “ACKN“ (4-1) shortens the time the inverter is in “FAULT“ state even if the type of error occurred does not have to be confirmed.

Subsequently the Sunny Island switches to the operating state “STANDBY“. This means that an automatic starting attempt can be made if this has been activated with the parameter “310_Auto Start“ (e. g. in the menu “PARSYS“ (3+3)).

If an error state that has made the Sunny Island switch off persists, the Sunny Island first performs the defined number of starting attempts and subsequently switches to the operating state “STANDBY“. This procedure is repeated approx. every hour.

The Sunny Island may start autonomously! Keep this in mind when you want to work on the island grid. Always switch off the AC fuses of all Sunny Islands in the island grid first!

“DIAG“ (0-4)	
Parameter	**Description**
Pending:	Number of errors occurred and detected
Not Ackn.:	Number of errors still to be confirmed by the operator
Current Error:	Error occurred last and still present

Table 10.1: Displayed menu selection “DIAG“ (0-4)

10.1 Menu “ACKN“ (4-1), Error Confirmation

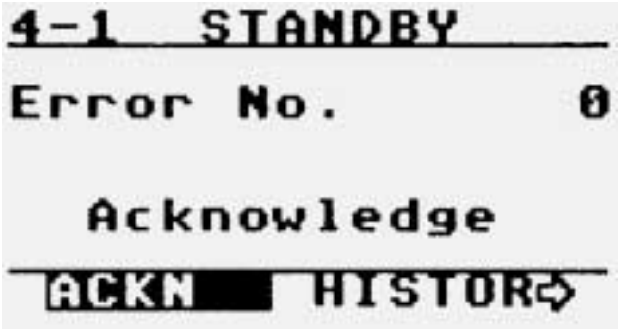

Fig. 10.3: Menu “ACKN“ (4-1)

This menu always shows the last serious error that has occurred. The operator has to confirm this error state by selecting the menu item “Acknowledge“. If there are more than one of those error messages they have to be confirmed one after the other.

10.2 Menu “HISTOR“ (4-2), Overall Protocol

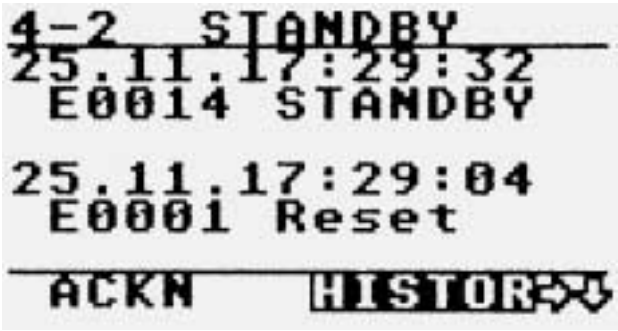

Fig. 10.4: Menu “HISTOR“ (4-2)

This menu comprises a chronological list of all changes of operating states logged by the Sunny Island (“events“), exceeded limiting values and errors (“errors“, “alerts“). The date and time of occurrence are logged as well for each of these. A list of messages available is provided in chapter 17.

10.3 Menu “ERRHIS“ (4-3), Error Protocol



Fig. 10.5: Menu “ERRHIS“ (4-3)

The menu “ERRHIS“ (4-3) lists the exceeded limiting values and errors occurred that are shown in the menu “HISTOR“ (4-2).

10.4 Menu “EVTHIS“ (4-4), State Protocol



Fig. 10.6: Menu “EVTHIS“ (4-4)

The menu “EVTHIS“ (4-4) lists the changes of operating states that are shown in the menu “HISTOR“ (4-2).

11 Battery Management

The battery management monitors the limit values for current, voltage and temperature, calculates the current charge degree and battery state, controls and monitors the charge depending on the previous situations and can control an electrolyte circulation pump as well as a battery room fan.

The parameters are described in chapter 8.5.

All settings to be considered for the first operation are described in chapter 6.

If you have exchanged the lead-acid battery of the Sunny Island restart the system and follow the instructions in chapter 6.2.

11.1 Charging Methods

The battery is charged in a charging procedure adjusted to the type of battery (gel, fleece or lead-acid battery). The Sunny Island is informed of the battery type via the parameter “502_Bat Type“ – e. g. in the menu “PARBAT“ (3+5). If you have installed a non VARLA battery with electrolyte circulation, please set the battery type to gel battery as the charging voltages and times are more suitable for this type. The final charge voltage of the battery is adjusted to the respective battery temperature, which in turn has been determined via a battery temperature sensor. Above 20 °C the reference value for the final charge voltage is therefore decreased by 4 mV/K (visible in the menu “PARBAT“ (3+5)). Below 20 °C the value is increased accordingly.

The Sunny Island is capable of running four different charging methods. The different voltages values and charging times of those methods are adjusted with temperature compensation to the respective battery type that has been set via parameters or adaptively determined. The charging methods have been designated as follows:

- Normal charge (as often as possible)
- Full charge (at least once a month if possible)
- Equalizing charge (every two to three months)
- Float charge (after one of the other charging procedures has been completed)

Charging is initiated by the battery management, i. e. requested from the system management when certain battery states have been reached.

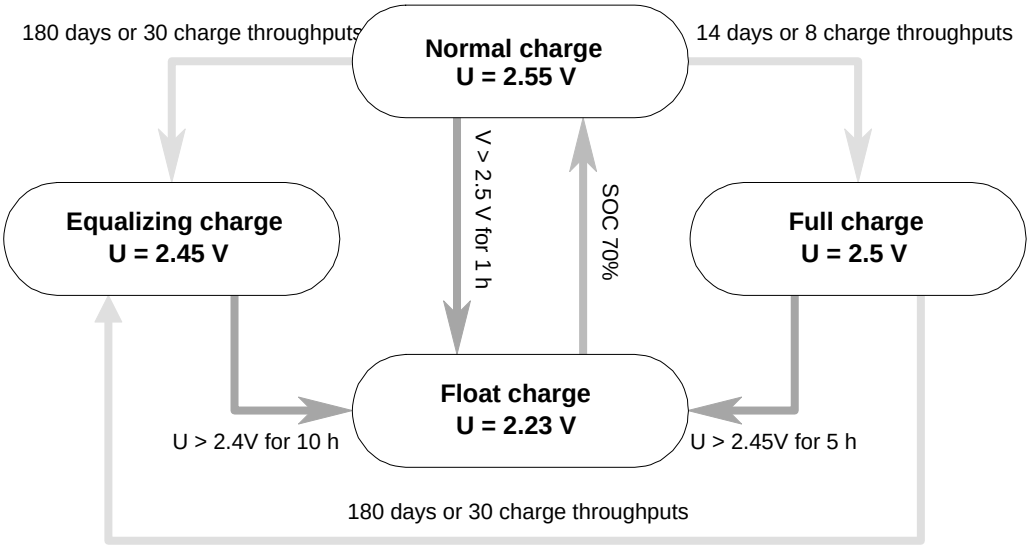

Fig. 11.1: Battery states with charging methods

The specified values are default values for a closed not circulated lead-acid battery.

A normal charge is made when the charging degree has fallen below 70 %. The priority is a short run-time of an additional aggregate (e. g. diesel generator).

By default, a full charge is completed every two weeks or 8 charge throughputs. A full charge leads to complete charging of the battery in order to avoid irreversible aging due to low charge degrees.

An equalizing charge is initiated every 180 days or 30 charge throughputs preventing that the individual cells within the entire battery system over time have charge degrees differing among each other and avoiding aging of individual cells.

The respective charges are switched off according to the criteria for voltage, current and time periods adjusted to the individual battery types.

11.2 Battery States

The battery management determines the state of the battery out of a selection of eleven possible battery states. It informs the relay control about the determined bat-

tery state. The mostly dominant input variable which is most important for the calculation of the battery state is the charge degree (see Fig. 11.2). This mainly provides information on the availability of the battery. In addition to the charge degree, however, other variables mainly concerning battery aging are also used for calculation. These are e. g. the battery voltage during overcharging or exhaustive discharging, but also the times after a full charge or an equalizing charge has first been requested. The battery state therefore shows that either the availability of the energy stored deteriorates considerably due to the decreasing charge degree or the battery is in an area with increasing aging while its charge degree can still be high.

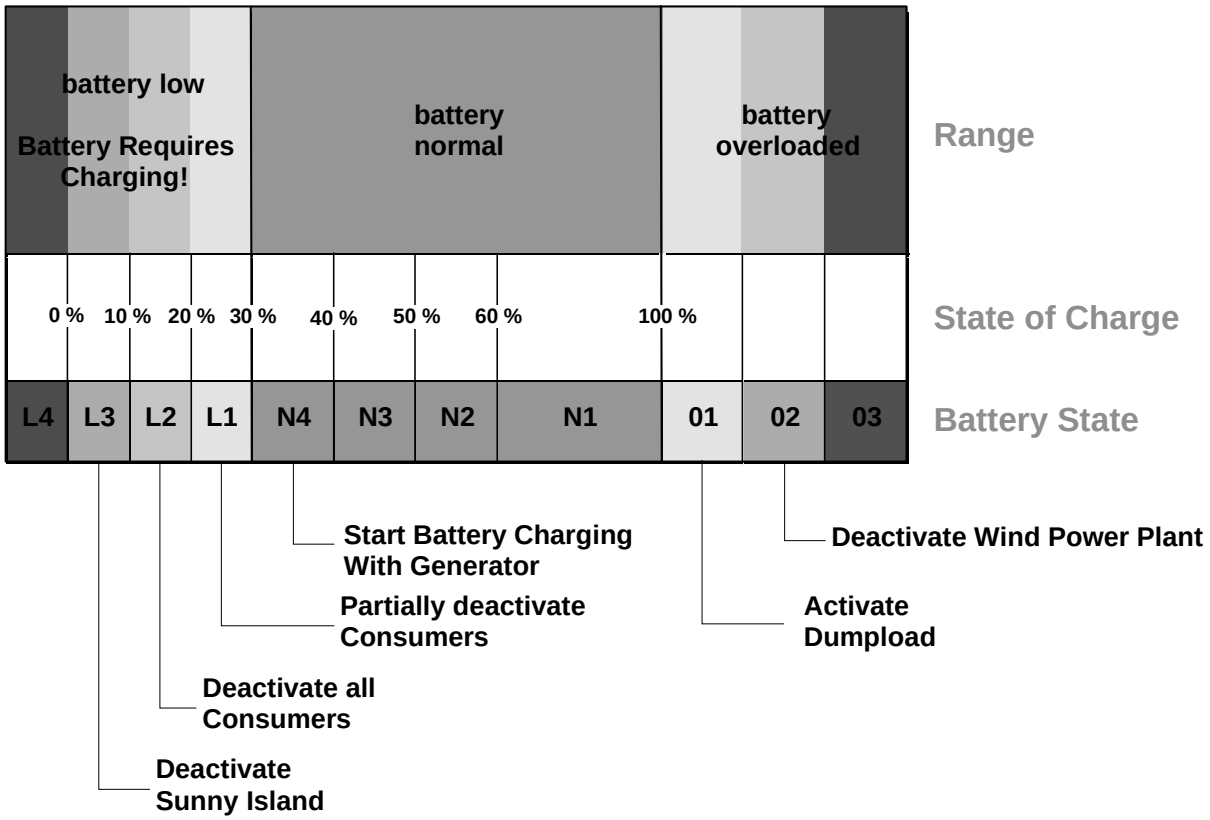

Fig. 11.2: Dependency of the battery state on the charge degree and possible switching operations

Battery states	Description
L4, L3, L2, L1	Reduced availability of the battery and increased battery aging
N4, N3, N2, N1	Normal working area with varying availability of the battery
O1, O2, O3	Overload

Table 11.1: Classification of battery states

The eleven defined battery states allow the user to make switches according to the battery state. The following table provides an overview of the different battery states (BST), their meaning and recommendations for possible switching measures:

BST	Meaning	Recommendations	Possible switching measures
O3	Very high overload	Immediately stop charging	Switch off all feeders via the frequency
O2	High overload	Drastically decrease charging power	Slight increase of frequency to switch off first PV inverters
O1	Overload	Decrease charging power	Switch on dumpload
N1	Very high security of supply	None	Switch off dumpload
N2	High security of supply	Notification of charge degree; if required first reduction of consumers	Switch off first load groups that are not continuously used or reduction of power
N3	Normal security of supply	Either reduce consumption or make sure battery is charged soon	Switch on dumpload soon or switch off certain load groups
N4	Low security of supply	Either reduce consumption drastically or make sure battery is charged soon	Switch on dumpload immediately or switch off all load groups that are not urgently required
L1	Increasing aging	Reduce consumption except for emergency supply; initiate charging, alarm message	Switch on dumpload immediately or switch off all load groups except for emergency supply
L2	Strong aging	Switch off all consumers, initiate charging	Switch on dumpload immediately or switch off all external load groups
L3	Very strong aging	Reduce internal consumption immediately, initiate charging, alarm message via switch-off	Inverter into standby operation
L4	Destruction of battery imminent	Immediately reduce internal consumption, initiate charging, alarm message via switch-off	Switch off inverter

Table 11.2: Battery states and recommended measures

11.3 Failure of Individual Cells

The Sunny Island is designed for the connection of lead-acid batteries with a nominal voltage of 60 V. If individual cells fail towards the end of the battery's expected service life, it may be more useful to remove them completely instead of replacing them. Otherwise the remaining service life of the other cells may be decreased. Any removal of cells, however, must always be advised to the battery management of the Sunny Island by changing the parameter "503_Ubat nom" in the menu "PARBAT" (3+5) accordingly.

The failure of individual cells should always be taken as a clear signal that the whole battery will fail within a short period of time. When installing a new battery via "New Battery" in the "INIT" (0-0) menu make sure to comply with the battery nominal voltage that has to be 60 V again.

12 Operating Modes

The Sunny Island can be modularly combined with other power sources and must then operate in different operating modes. This chapter covers both basic grid configurations and the resulting requirements for the Sunny Island and the other components in the island grid.

Control of voltage and frequency in the island grid

The Sunny Island can operate in the following operating modes:

- Grid forming (RUN_U), the Sunny Island keeps the voltage and the frequency of the grid at a constant level.
- Grid-tied (RUN_I), the Sunny Island follows the voltage and frequency that is defined by a further component of the island grid that itself forms the grid.

12.1 Grid-Forming Operation (RUN_U)

In grid forming mode the Sunny Island keeps the grid voltage at a constant sine-wave voltage and constant frequency. The voltage and frequency is defined in the “PARGRD“ 3+4 parameters. The Sunny Island then has to provide the necessary active and reactive power that is required for the control of the grid. All other components in the grid then have to operate as grid controlled power generators or consumers.

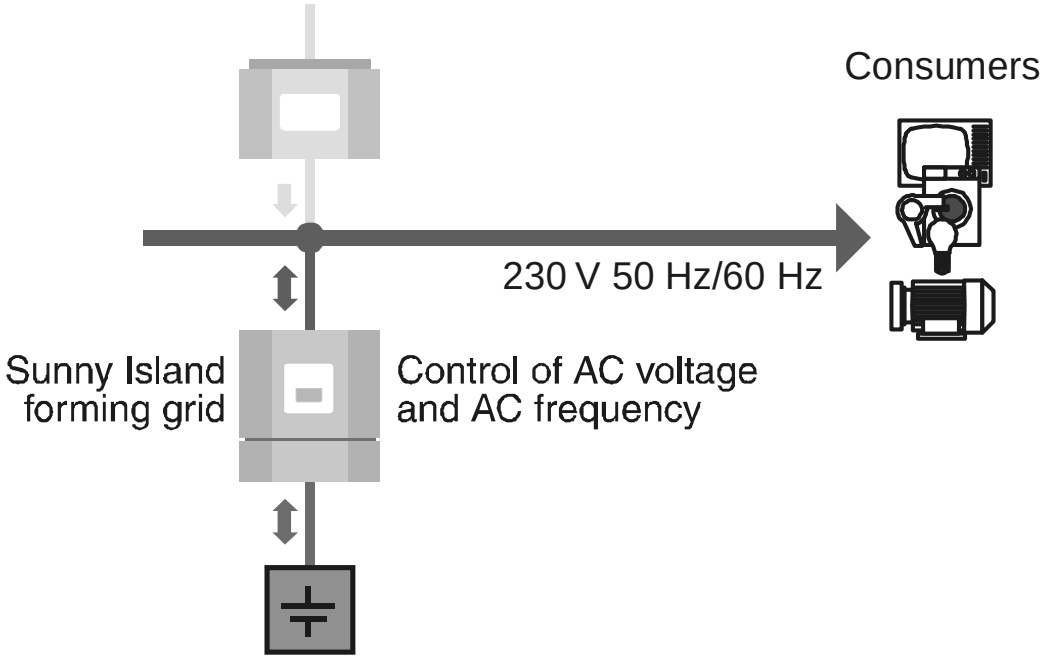

Fig. 12.1: Sunny Island as grid-forming element

This operating mode requires that there are no further components within the grid that control the frequency or the voltage. No parallel operation with the public utility or an independent synchronous generator is possible in this mode.

In this mode the Sunny Island can only charge the batteries whenever the components within the grid (Sunny Boy inverters, synchronous generators) generate more power than required. In case these components generate less power than consumed within the grid the Sunny Island supplies the power to the grid by discharging the batteries.

The charge degree of the batteries can therefore only be manipulated by controlling the power generating components and the consumers within the grid.

Due to the battery management the Sunny Island can perform a full charge of high quality even in this operating mode, that can take several days, if necessary (for example if there are only photovoltaic feeders).

12.2 Grid-Tied Operation (RUN_I)

In grid tied operation the Sunny Island follows the voltage and frequency defined by an external power source. This can be an independent synchronous generator or the public utility. In this case the Sunny Island does not control the grid voltage and grid frequency, it controls the current it feeds to the grid. The battery is charged or the grid is supported by discharging the batteries depending on the consumer/generator situation within the grid. Defined and optimal charging of the battery at any time desired is only possible in this mode.

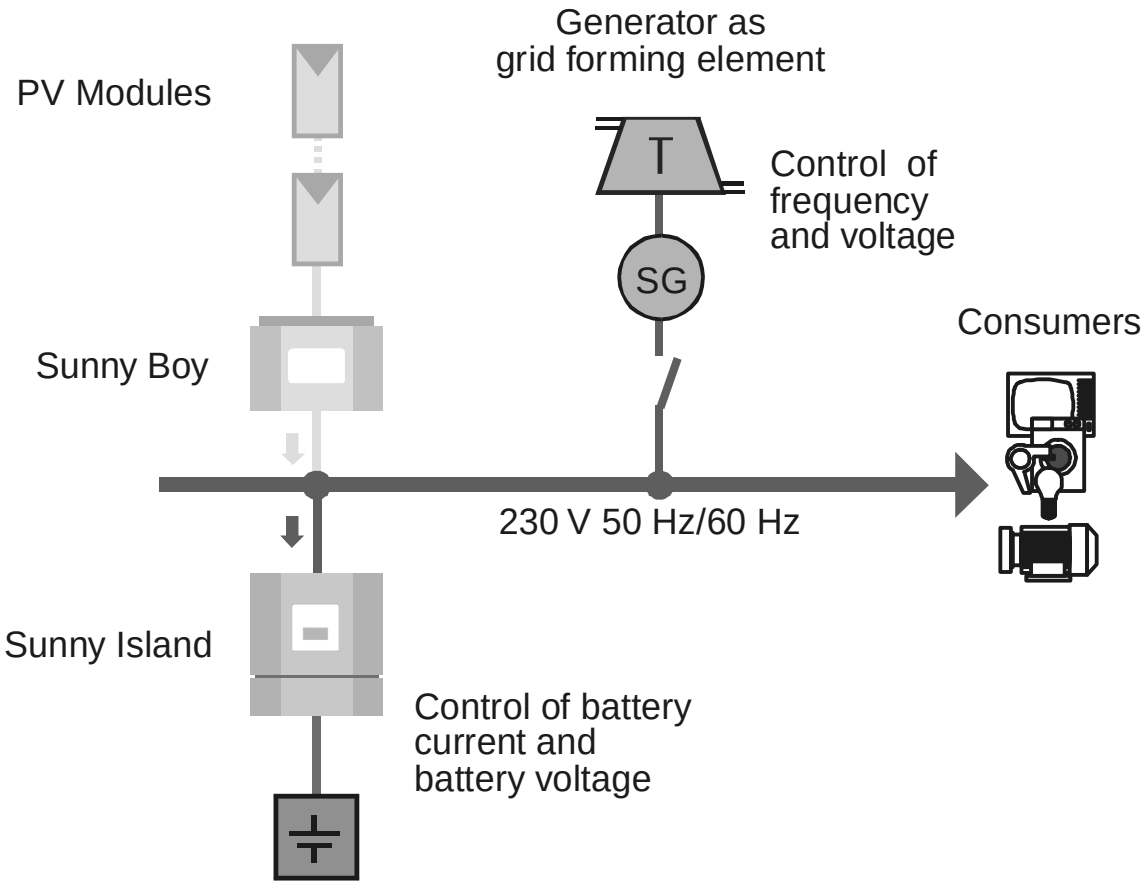

Fig. 12.2: Sunny Island with external grid-former

12.3 Overload Behavior

One major feature of an island inverter is the performance in terms of overload. While the consumers within the island grid will want an uninterrupted and continuous power supply the plant operators will want a long term reliability and operation of the inverter and the batteries as well. The manufacturer of the island inverter must take fundamental aspects in terms of safety into account in order to provide maximum safety for the personnel and the connected components.

The overload capacity of the Sunny Island depends on such requirements as well:

In a high overload situation (more than double the nominal power) the Sunny Island trips the internal AC fuse F2 after a few seconds. The battery management prevents an intensive discharge that could damage the batteries in case the battery charge level is low.

In an overload situation between 1.3 x and 2 x nominal power the performance mainly depends on the behavior of the AC fuse. The behavior of the fuse in this load range mainly depends on the ambient temperature and the tolerances of the manufacturer. The thresholds that are mandatory are available in the IEC/EN 60947 ("R").

In an overload Situation between nominal power and 1.3 x nominal power the performance mainly depends on the ventilation and the resulting temperature inside the enclosure of the Sunny Island. In case the Sunny Island is installed in a room within the specified ambient temperature an automatic deactivation of the Sunny Island due to overheating will normally take place after a few hours or even not at all.



Please note that any operation of the Sunny Island beyond the specified limits in terms of temperature and output power etc. has negative influence on the lifetime of the Sunny Island.

One reason for the careful observation of the overload performance is the connection or activation of “problem loads“. These are consumers that extract a very high amount of power from the grid when they are activated. This power can be very

much higher than the nominal power, simple halogen lamps extract up to 15 x of the nominal power when they are turned on.

These consumers do not continuously require this high power, the Sunny Island therefore does not have to be capable of generating this power. What is more important is a sophisticated control strategy. When such loads are connected the Sunny Island therefore reduces the AC voltage for a short time. This not only reduces the current peaks on the AC side, but also those on the DC side – thus increasing the battery power and prolonging the battery's service life.

13 Island Grids – Examples

This chapter covers basic examples for island grids that can help engineers and installers understand island grids based on the Sunny Island. It refers to parameter settings that usually have to be made in order to operate in a specific configuration. Due to the fact that the plant configuration can differ from the examples quoted here the configuration of the Sunny Island can differ from the parameter settings suggested in the following.

13.1 Single-Phase PV Island Grid with Generator

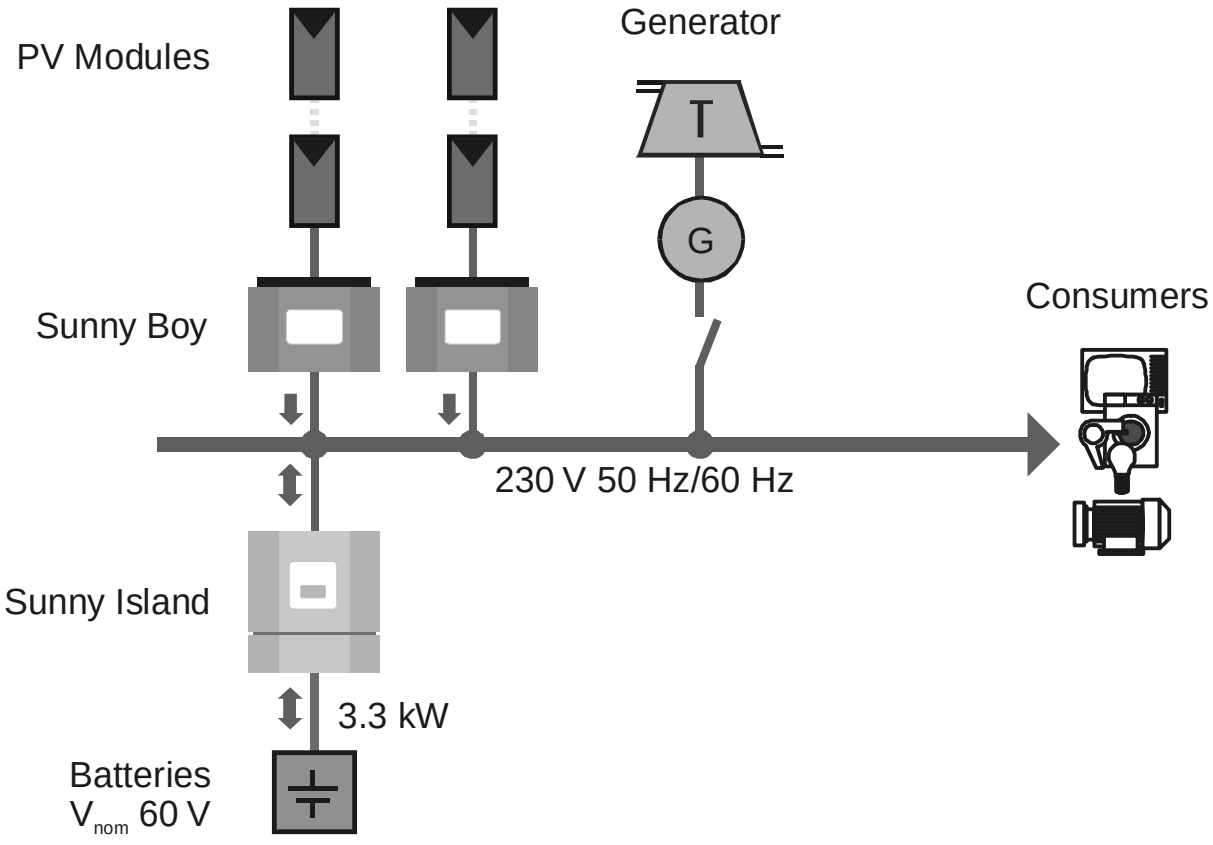

Fig. 13.1: Sunny Island (single phase) with generator and PV

The Sunny Island operates in a single phase island grid in this example. The island grid consists of single phase power sources (Sunny Boy, Generator) and consumers

as well as the Sunny Island with a battery storage that forms the grid. Normally the voltage and frequency of the island grid are specified by the Sunny Island. If additional energy is necessary, the Sunny Island activates the generator functioning as grid-forming element.

Necessary configuration

The installer has to set the parameters of the Sunny Island listed in Table 13.1. The values are of course only examples. The generator operates in parallel to the grid and is assumed to be "Type 1".

Parameter	Configuration	Description
501_Cbatnom	350 Ah	Nominal capacity of the battery (as stated by manufacturer)
502_Bat Type	Lead acid	Depending on type (gel, fleece or liquid)
503_Ubat nom	60.0 V	Battery nominal voltage
506_acid density	1.28 kg/l	Nominal acid density of electrolyte
401_Phase Mode	1Phs_Single	Single-phase operation
402_Uconv nom	230.0 V	Nominal voltage AC (RUN_U)
403_Fconv nom	50.00 Hz	Nominal frequency AC (RUN_U)
602_GenSET typ	Grid tied	Grid-tied
603_GenSet inter	Typ 1	Autostart relay K1
701_Man K1	Auto	Relay 1 is controlled by Sunny Island
702_Man K2	Auto	Relay 1 is controlled by Sunny Island (connects the generator to the island grid)
801_Sunny Boys	Installed	Installed

Table 13.1: Summary of parameters to be configured



Even in island grids with feeders independent of weather conditions we recommend to wire up the consumers in a way so as to be able to switch them off with the Sunny Island (via one of the relays K1 to K8). Especially in case of a failure (generator defective etc.) the battery can thus be protected against harmful conditions and emergency operation can be made as efficient as possible.



To monitor the battery temperature a Pt100 temperature sensor has to be connected to the Sunny Island.

13.2 Single-Phase PV Island Grid without Generator

In an island grid only consisting of power sources based on renewable energy optimum battery management can only be guaranteed if combined with load management. This is due to the fact that energy yield may vary strongly depending on the season. The Sunny Island is optimized for integration of grid-tied PV plants into an island grid and allows sophisticated load management. The Sunny Boy inverters available in different sizes can be modularly integrated into the island grid. The Sunny Boys and the Sunny Island communicate via the COM2 interface (RS485). Via this interface the Sunny Island derates the output power of the Sunny Boys in case the battery is about to be overcharged.

Disconnection of consumers

In an island grid that does not include a feeder available any time (combustion aggregate) the consumers connected should be classified in terms of which battery states have to be reached for the Sunny Island to switch them off or - if required - switch them on. This allows a careful operation of the battery and a high reliability of the most important consumers. Any consumers in the island grid whose temporary switch-off will not have serious consequences (such as air conditioning) should be used in order to reduce consumption within the island grid in case of a low battery. The Sunny Island should disconnect these consumers via one of the freely configurable relays (K1 to K8) if e. g. the battery state N3 or N4 is reached. When battery state L2 is reached all consumers – if possible - should be switched off at the latest. A model for wiring is shown in chapter 3.4.10.

Emergency operation

In case of a flat battery in a purely PV-supplied island grid (battery state L4) the Sunny Island has an operating mode enabling it to make the AC grid available to feeders nonetheless. In this mode the inverter generates the grid voltage for a few minutes every four hours over the day and detects whether there is enough feeding power to charge the battery. This is an effective way to avoid a long-term total shut-down of the system even under the worst conditions.

Required parameter settings

The installer has to set the parameters of the Sunny Island listed in Table 13.2. The values are of course only examples. The configuration is based on the assumption that the consumers that can be disconnected are controlled via relay K4.

Parameter	Configuration	Description
501_Cbatnom	350 Ah	Nominal capacity of the battery (as stated by the manufacturer)
502_Bat Type	Lead acid	Depending on type (gel, fleece or liquid)
503_Ubat nom	60.0 V	Nominal battery voltage
506_acid density	1.28 kg/l	Nominal acid density of electrolyte
401_Phase Mode	1Phs_Single	Single-phase operation
402_Uconv nom	230.0 V	Nominal voltage AC (RUN_U)
403_Fconv nom	50.00 Hz	Nominal frequency AC (RUN_U)
704_Man K4	AUTO	Relay K4 is controlled by the Sunny Island system management
728_K4 t2 begin	0h	No special time period for relay K4
729_K4 t2 end	0h	No special time period for relay K4
730_K4 On t1	N4	After the value has fallen below L1, consumer is only switched on again when the battery state has reached N4 (rising)
731_K4 Off t1	L1	Consumer is switched off when battery state L1 has been reached (falling)
801_Sunny Boys	Installed	Installed

Table 13.2: Summary of parameters to be configured



To monitor the battery temperature a Pt100 temperature sensor has to be connected to the Sunny Island!

13.3 Single-Phase PV Island Grid with Generator and Utility

In case the power supply from the public utility is insufficient due to frequent long shutdown or seasonal variations the Sunny Island can provide a more independent power supply. This requires that the public utility is integrated into the island grid. An example is given in chapter 16.

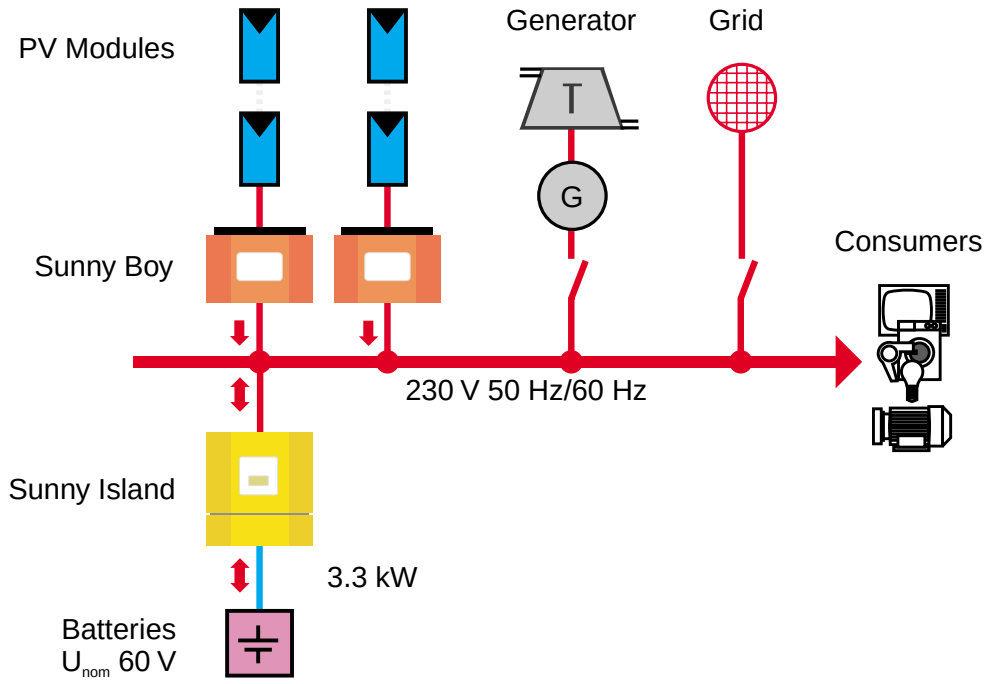

Fig. 13.2: Sunny Island with PV, generator and public utility (single-phase)

This type of plant configuration requires a very sophisticated planning and commissioning in order to prevent any kind of accident with live wires that are assumed to be safe to touch. All local regulations and laws must be kept to and the approval of the public utility company is mandatory!

To monitor the battery temperature a Pt100 temperature sensor has to be connected to the Sunny Island!

Required parameter settings

The installer has to set the parameters listed in Table 13.3. The values are of course only examples. The generator is defined to be grid forming and is assumed to be of type 2. A current and voltage measurement for the generator should be installed. See chapter 3.4.5 for details.

Parameter	Configuration	Description
501_Cbatnom	350 Ah	Nominal capacity of the battery (as stated by manufacturer)
502_Bat Type	Lead acid	Depending on type (gel, fleece or liquid)
503_Ubar nom	60.0 V	Nominal battery voltage
506_acid density	1.28 kg/l	Nominal acid density of electrolyte
401_Phase Mode	1Phs_Single	Single-phase operation
402_Uconv nom	230.0 V	Nominal voltage AC (RUN_U)
403_Fconv nom	50.00 Hz	Nominal frequency AC (RUN_U)
410_Iext nom	10 A	Configure generator nominal current
602_GenSET typ	Grid forming	Grid-forming
603_GenSet inter	Typ 2	Relays K1+K5
604_GenSet Ctrl	I_Diesel	Control of generator current (current transformer required)
609_GenLoad min	10	Minimum generator capacity utilization in %, if value falls below limit the generator is switched off (taking into account the minimum run-time “613_tGen minrun“).
701_Man K1	Auto	Relay 1 is controlled by Sunny Island
702_Man K2	Auto	Relay K2 is controlled by Sunny Island (Connection of generator to island grid)
703_Man K3	Auto	Relay K3 is controlled by Sunny Island (Connection of external utility to island grid)
705_Man K5	Auto	Relay 5 is controlled by Sunny Island
706_Man K6	Auto	Relay K6 is controlled by Sunny Island (Warming up / Starting the Diesel generator)
801_Sunny Boys	Installed	Installed

Table 13.3: Summary of parameters to be configured



Even in island grids with feeders independent of weather conditions we recommend to wire up the consumers in a way so as to be able to switch them off with the Sunny Island (via one of the relays K1 to K8). Especially in case of a failure (generator defective etc.) the battery can thus

be protected against harmful conditions and emergency operation can be made as efficient as possible.

13.4 Three-Phase PV Island Grid with Generator

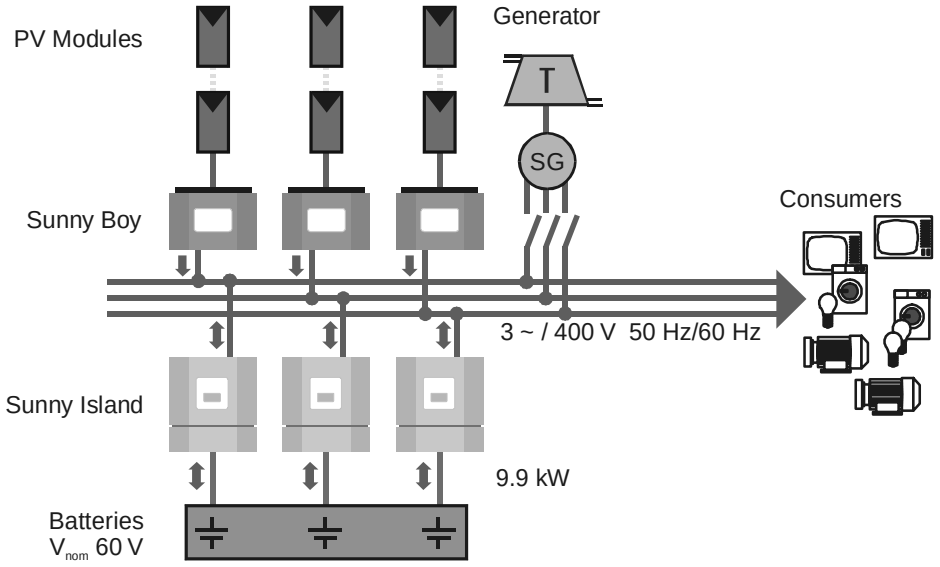

Fig. 13.3: Sunny Islands with PV and generator (three-phase)

Necessary configuration

The installer has to set the parameters of the Sunny Island listed in Table 13.4. The values are of course only examples. The generator forms the grid and is assumed to be of type 2. A current and voltage measurement for the generator should be installed. See chapter 3.4.5 for details.

Parameter	Configuration	Description
501_Cbatnom	350 Ah	Nominal capacity of the battery (as stated by manufacturer)
502_Bat Type	Lead acid	Depending on type (gel, fleece or liquid)
503_Ubat nom	60.0 V	Nominal battery voltage
506_acid density	1.24 kg/l	Nominal acid density of electrolyte
401_Phase Mode	3Phs_Mstr1Set	Three-phase operation, define one inverter as master 3-phase master L1, the other ones as slaves 3-phase slaves L1 and L2
402_Uconv nom	230.0 V	Nominal voltage AC (RUN_U)
403_Fconv nom	50.00 Hz	Nominal frequency AC (RUN_U)

Parameter	Configuration	Description
410_Iext nom	10 A	Configure generator nominal current (per phase)
602_GenSET typ	Grid forming	Grid-forming
603_GenSet inter	Typ 2	Autostart Relays K1+K5
604_GenSet Ctrl	I_Diesel	Control of generator current (current transformer required)
609_GenLoad min	10	Minimum capacity utilization of generator in %, if value falls below this limit the generator is switched off (taking into account the minimum run-time “613_tGen minrun“).
701_Man K1	Auto	Relay K1 is controlled by Sunny Island
702_Man K2	Auto	Relay K2 is controlled by Sunny Island (Connection of generator to island grid)
706_Man K6	Auto	Relay K6 is controlled by Sunny Island (Warming up / Starting the Diesel generator)
801_Sunny Boys	Installed	Installed

Table 13.4: Summary of parameters to be configured



To monitor the battery temperature a Pt100 temperature sensor has to be connected to the Sunny Island!



Even in island grids with feeders independent of weather conditions we recommend to wire up the consumers in a way so as to be able to switch them off with the Sunny Island (via one of the relays K1 to K8). Especially in case of a failure (generator defective etc.) the battery can thus be protected against harmful conditions and emergency operation can be made as efficient as possible.

14 Overview: Configurable System Parameters

Normally the system parameters can only be displayed and changed after the installer password has been entered. The following overview is meant primarily as a reference list for set-up of parameters via one of the interfaces of the Sunny Island. Therefore the names of parameters are not always exactly the same as those shown on the Sunny Island display. The column “Description“ additionally shows the number which has to be transmitted to select the respective setting. The parameter number shows you in which specific “PARxxx“ (3+x) menu you will find the respective parameter.

Parameter number	**„PARxxx“ (3+x) –menu**
300 ... 399	„PARSYS“ (3+3)
400 ... 499	„PARGRD“ (3+4)
500 ... 599	„PARBAT“ (3+5)
600 ... 699	„PARGEN“ (3+6)
700 ... 799	„PARREL“ (3+7)
800 ... 899	„PARSB“ (3+8)

Table 14.1: Allocation parameter number / menu

„PARALL“ (3+9)					
Parameter	**Unit**	**Min.**	**Max.**	**Default**	**Description**

„PARALL“ (3+9)					
Parameter	**Unit**	**Min.**	**Max.**	**Default**	**Description**
310_Auto Start		0	255	0	Number of autostart attempts (0: autostart off) within one hour. After one hour of operation the counter will be reset. Autostart means that approx. 10 sec after a switch-off (due to error or the like) the Sunny Island re-starts. In addition, the Sunny Island starts automatically after switching on the DC voltage when the Autostart is activated. **ATTENTION!** The Sunny Island's low battery load mode is not affected by this setting. Running in that mode it is thus possible that the Sunny Island will start from time to time, even if this parameter is set to 0! (s. Parameter “535_State Stop T” for details)
312_COM1 Proto		0	2	1	Communication protocol COM1: 0: None: interface not in use 1: SMANET: interface based on SMANet protocol 2: SUNNYNET: interface based on SunnyNet protocol For communication to Sunny Boys: set to SUNNYNET
313_COM1 Baud		0	9	6	Baud rate COM1 (bits/s) 2: 1200 5: 9600 6: 19200 For communication to Sunny Boys or Sunny Boy Controls: set to 1200 In three-phase operation all inverters have to be set to 19200!
316_COM2 Proto		0	2	2	Communication protocol COM2: 0: None: interface not in use 1: SMANET: interface based on SMANet protocol 2: SUNNYNET: interface based on SunnyNet protocol For communication to Sunny Boys: set to SUNNYNET
317_COM2 Baud		0	9	2	Baud rate COM2 (bits/s) 2: 1200 5: 9600 6: 19200 For communication to Sunny Boys or Sunny Boy Controls: set to 1200.

„PARALL“ (3+9)					
Parameter	**Unit**	**Min.**	**Max.**	**Default**	**Description**
401_Phase Mode		0	16	0	0: 1Phs_Single: single-phase operation, inverter is the only device 1: 1Phs_Psingle: single-phase parallel operation with one battery per device (grid and generator not possible!) 2: 1Phs_Mstr2: single-phase parallel operation with two devices with one single batterry pack, device is master 3: 1Phs_Mstr3: single-phase parallel operation with three devices with one single battery pack, device is master 4: 1Phs_Slv2: single-phase parallel operation with two or three devices with one single battery pack, device is slave 2 5: 1Phs_Slv3: single-phase parallel operatation with three devices with one single battery pack, device is slave 3 6: 3Phs_Mstr1Set: three-phase operation, device is master (L1) 10: 3Phs_Slv1L2: three-phase operation, device is slave (L2) 11: 3Phs_Slv1L3: three-phase operation, device is slave (L3)
402_Uconv nom	V	200	260	230	Setpoint value of AC voltage which the Sunny Island is to provide in its function as the grid-forming element (RUN_U)
403_Fconv nom	Hz	40	70	50 (60)	Setpoint value of AC frequency which the Sunny Island is to provide in its function as the grid-forming element (RUN_U)
404_Uext nom	V	150	260	230	Nominal AC voltage (RUN_I)
405_Uext min	V	150	260	200	Lower limit for AC voltage
406_Uext max	V	150	260	255	Upper limit for AC voltage
407_Fext nom	Hz	40	70	50 (60)	Nominal AC frequency, Sunny Island is in “grid-tied” operation (RUN_I), 50 Hz (60 Hz) design
408_Fext min	Hz	40	70	47 (57)	Lower limit for AC frequency, 50 Hz (60 Hz) design
409_Fext max	Hz	40	70	56 (66)	Upper limit for AC frequency, 50 Hz (60 Hz) design
411_Iac chrg mx	A	0	16	10	Max. current the Sunny Island may take out of the AC grid in “grid-tied“ operation (RUN_I, battery is being charged in the process)

„PARALL“ (3+9)					
Parameter	**Unit**	**Min.**	**Max.**	**Default**	**Description**
501_Cbat nom	Ah	100	10000	350	Nominal battery capacity of 10 hours (C10); always enter the value stated by the manufacturer even if the battery has already aged!
502_Bat Type		0	2	2	Battery type as stated by manufacturer 0: Gel gel 1: Fleece fleece 2: Lead-Acid liquid electrolyte
503_Ubat nom	V	54	60	60	Nominal battery voltage. Normally 60 V have to be set. For exceptions see chapter 11.3.
504_Ubat min	V	46	84	51	min. battery voltage permissible
505_Ubat max	V	51	84	84	max. battery voltage permissible
506_acid density	kg/l	1,1	1,35	1,28	Nominal acid density according to manufacturer (only taken into account if inverter is started via “New System“ or “New Battery“ (see chapter 6))
507_SOC ini	%	0	100	0	Initial discharge degree of battery (only taken into acount if inverter is started via “New System“ or “New Battery“ (see chapter 6)) If set to “0” the Sunny Island estimates the discharge degree based on battery voltage.
508_Tbat Sense		0	1	1	Battery temperature sensor installed 0: Not installed 1: Installed Automatically set to 1 in single-phase systems or masters in three-phase systems; in all other cases set to 0. Can be set to 1 in slaves if temperature sensors are additionally installed there.
509_Tbat max	degC	30	55	40	Maximum battery temperature permissible
511_Bat Fan		0	1	0	Battery room fan installed (only for lead-acid battery with liquid electrolyte) 0: Not installed 1: Installed
512_Acid Pump		0	1	0	Only for lead-acid battery with liquid electrolyte: 0: Not installed Electrolyte circulation pump not installed 1: Installed Electrolyte circulation pump installed By selecting “Installed“ the electrolyte circulation pump is switched on depending on settings of parameters 513 to 516. Irrespective of battery values, however, there is at least one circulation and 9 circulations maximum per day.

„PARALL“ (3+9)					
Parameter	**Unit**	**Min.**	**Max.**	**Default**	**Description**
513_Circ time	s	1	3600	300	Run time of electrolyte circulation (per circulation process)
516_Circ Qd	%	0,1	50	10	Electrolyte circulation is triggered as soon as the battery has been charged with the corresponding ampere hours related to its capacity (cumulative).
518_tset full	d	1	180	14	Time period after which full charge is required.
519_tset equal	d	7	365	180	Time period after which equalizing charge is required.
520_U float	V	2,2	2,4	2,25	Float charge voltage per cell
521_tVR charge	min	1	600	120	Charging time for normal charge (for gel or fleece batteries, see also “502_Bat Type”)
522_tVR full	h	1	20	5	Charging time for full charge (for gel or fleece batteries, see also “502_Bat Type”)
523_tVR equal	h	1	48	10	Charging time for equalizing charge (for gel or fleece batteries, see also “502_Bat Type”)
524_UVR charge	V	2,25	2,6	2,4	Charging voltage for normal charge per cell (for gel or fleece batteries, see also “502_Bat Type”) Please follow the instructions of the battery manufacturer.
525_UVR charge full	V	2,25	2,6	2,4	Charging voltage for full charge per cell (for gel or fleece batteries, see also “502_Bat Type”) Please follow the instructions of the battery manufacturer.
526_UVR charge equal	V	2,25	2,6	2,4	Charging voltage for equalizing charge per cell (for gel or fleece batteries, see also “502_Bat Type”) Please follow the instructions of the battery manufacturer.
527_tcharge	min	1	600	90	Charging time for normal charge (for lead-acid batteries, see also “502_Bat Type“)
528_tcharge full	h	1	20	5	Charging time for full charge (for lead-acid batteries, see also “502_Bat Type“)
529_tcharge equal	h	1	48	10	Charging time for equalizing charge (for lead-acid batteries, see also “502_Bat Type“)
530_Ucharge	V	2,29	2,7	2,55	Charging voltage for normal charge per cell (for lead-acid batteries, see also “502_Bat Type“) The value should be reduced to 2,45 V in case an electrolyte circulation pump is installed. Please follow the instructions of the battery manufacturer.

„PARALL“ (3+9)					
Parameter	**Unit**	**Min.**	**Max.**	**Default**	**Description**
531_Ucharge full	V	2,25	2,7	2,5	Charging voltage for full charge per cell (for lead-acid batteries, see also “502_Bat Type“) The value should be reduced to 2,45 V in case an electrolyte circulation pump is installed. Please follow the instructions of the battery manufacturer.
532_Ucharge equal	V	2,25	2,7	2,45	Charging voltage for equalizing charge per cell (for lead-acid batteries, see also “502_Bat Type“) Please follow the instructions of the battery manufacturer.
533_Stdby t beg	h	0	23	0	Start of time period when the low battery load mode is permitted (see also “535_Stat StopT“)
534_Stdby t end	h	0	23	0	End of time period when the low battery load mode is permitted (see also “535_Stat StopT“)
535_State StopT		0	10	2	In case of deep-cycle discharge the device will switch off to reduce strain on the battery, if no charging current of a minimum of 1 A flows into the battery for more than 5 minutes within the defined time period (see also “533_Stdby t beg”, „534_Stdby t end“). The low battery load mode is always activated, when one battery state lower is reached. However from 6 am to 6 pm the Sunny Island attempts to switch on every four hours. Battery states when the low battery load mode is activated: 0: L4 1: L3 2: L2 3: L1 4: N4 5: N3 6: N2 7: N1 8: O1 9: O2 10: O3
536_Fan on del	min	0	1440	1	Delay of switch-on for battery room fan In order to use this setting, “511_Bat Fan” must be set to “Installed“

„PARALL“ (3+9)					
Parameter	**Unit**	**Min.**	**Max.**	**Default**	**Description**
537_Fan off del	min	0	360	60	Delay of switch-off for battery room fan In order to use this setting, “511_Bat Fan” must be set to “Installed“
538_Iloss nom	mA /100Ah	0	-100	-30	Specific leakage current of battery for float charge and 20 °C Approximate values: -30 mA/100Ah for new batteries -80 mA/100Ah for batteries that have considerably aged The value is NOT automatically defined by the Sunny Island. Battery management can therefore be further optimized by manually adjusting the value from time to time.
601_GenSet Oper		0	3	0	0: Auto: The generator is automatically started and stopped by the Sunny Island. 1: Man. Start: The generator is immediately* started. 2: Man. Stop: The generator is immediately* stopped. 3: Man. Ackn: Waiting times due to failures or parameters are finished. * However, parameterized times are kept to.
602_GenSet Type		0	5	0	0: None: No generator present in island grid 1: Grid forming: Generator is grid-forming. 3: Mains: Sunny Island is operated on the public utility grid. 4: BHKW-Mains Sunny Island is operated together with the Ecopower CHP and on the public utility grid 5: BHKW-Island Sunny Island is operated together with the Ecopower CHP just 6: Mains form Sunny Island is operated together with a grid-forming generator and on the public utility grid

„PARALL“ (3+9)					
Parameter	**Unit**	**Min.**	**Max.**	**Default**	**Description**
					7: fast Grid form Generator is grid-forming and it is switched between the generator and the Sunny Island without interruption (special installation measures are necessary for this) 8: fast Mains The Sunny Island is operated on the public utility grid and it is possible to switch from the Sunny Island as grid-former to the public utility grid without interruption. (special installation measures are necessary for this) 9: fast Mains form The Sunny Island is operated together with a grid-forming generator and on the public utility grid. Switching takes place without interruption (special installation measure are necessary for this)
603_GenSet Interf		0	4	0	0: None: generator not controlled by Sunny Island 1: Typ 1: autostart, relays K1+K2 2: Typ 2: 3 contacts run / start, relays K1, K2, K5 3: Typ 3: 3 contacts start / stop, relays K1, K2, K5 4: EcoPower Ecopower CHP (see also chapter 16 “Starting phase sequence of different generator types”)
604_GenSet Ctrl		0	3	0	The Sunny Island reduces its current input in charge operation (RUN_I) ... 0: OFF: ... not at all 1: F_MAINS: ... as a function of generator frequency 2: I_DIESEL: ... as a function of generator current (converter required, see chapter 3.4.5) 3: BOTH: ... as a function of generator frequency and current (converter required, see chapter 3.4.5)
605_GenStRetr		1	30	5	Max. number of attempts to start the generator, before the state “Fail Locked“ is reached (see also parameter 618). After the minimum run-time of the generator has expired, the counter will be reset.
606_CurTrfRatio	Ain/5 Aout	0	1000	5	Current transformer ratio (in A per 5 A) for measurement of generator current

„PARALL“ (3+9)					
Parameter	**Unit**	**Min.**	**Max.**	**Default**	**Description**
607_Igen max	A	0	500	0	Max. generator current (per phase), only applies if “604_GenSet Ctrl” is set accordingly
610_tGen glow	s	1	180	15	Length of time the relay is controlled to glow up the generator
611_tGen crank	s	1	60	10	Length of time the relay is controlled to crank the generator
612_tGen warm	s	1	900	15	Warm-up time of generator
613_tGen minrun	min	1	180	5	Minimum run time of generator
614_tGen cool	s	0	900	60	Cooling time of generator
615_tGen stop	s	1	180	10	Length of time the relay is controlled to stop the generator
616_tGen lock	min	1	180	5	Period of time the generator – after having been stopped - cannot be restarted via the Sunny Island (can be shortened by confirmation in the “GENSET“ (2-2) menu)
617_tGen fail	min	1	180	5	Period of time the generator cannot be restarted via the Sunny Island after a generator failure (can be shortened by confirmation in the “GENSET“ (2-2) menu)
618_tGen faillock	h	1	168	6	Period of time the generator cannot be restarted via the Sunny Island after a certain number of failures as defined in “605_GenStRetr“ has occurred during start-up (can be shortened by confirmation in the “GENSET“ (2-2) menu)
625_PldL GenOn	%	-100	100	0	Switch-on threshold in % of the nominal power at one phase for the power-related generator start or the power-related relais (only K5 or K6). If the relays shall be switched in relation to the power, the parameters “705_Man K5” and/or “706_Man K6” must bei set to “LOAD“
626_PldL GenOff	%	-100	100	0	Switch-off threshold in % of the nominal power at one phase for the power-related generator start or the power-related relais (only K5 or K6). If the relays shall be switched in relation to the power, the parameters “705_Man K5” and/or “706_Man K6” must bei set to “LOAD“
627_PldS GenOn	%	-100	100	0	Switch-on threshold in % of the nominal power based on the cumulative power within the three-phase system for the power-related generator start or the power-related relays (only K5 or K6). If the relays shall be switched in relation to the power, the parameters “705_Man K5” and/or “706_Man K6” must bei set to “LOAD“

„PARALL“ (3+9)					
Parameter	**Unit**	**Min.**	**Max.**	**Default**	**Description**
628_PldS GenOff	%	-100	100	0	Switch-off threshold in % of the nominal power based on the cumulative power within the three-phase system for the power-related generator start or the power-related relays (only K5 or K6). If the relays shall be switched in relation to the power, the parameters “705_Man K5” and/or “706_Man K6” must bei set to “LOAD“
629_TavgLdLx	Sec	5	60	10	Averaging time for the power calculation per phase (see also “625_PldL GenOn” and “626_PldL Gen-Off”)
630_TavgLdSum	Min	1	20	1	Averaging time for the calculation of the cumulative power within the three-phase system (see also “627_PldS GenOn” and “628_PldS GenOff”)
631_PldLzMin	%	0	100	60	Lower limit for the charging state, when the Eco-power CHP will always be started
632_PldLzMax	%	0	100	85	Upper limit for the charging state, when the Eco-power CHP will never be started
633_PConsMin	W	0	2000	1000	Lower limit for the load power (cumulative power averaged over all three phases within the time period of the parameter “630_TavgLdSum“), that has to be exceeded, in order to start the Ecopower CHP even in the case of charging states between “631_PldLzMin” and “632_PldLzMax“.
634_PConsMax	W	0	10000	3000	Upper limit for the load power (cumulative power averaged over all three phases within the time period of the parameter), when the Ecopower CHP will already be startet in the case of a charging state of “632_PldLzMax”.
635_PChargeMax	W	0	16000	3000	Setpoint for the charging power, that the Sunny Island obtains from the Ecopower CHP.
636_PDump1	W	0	8000	500	Power of Dumpload 1, that has to be connected to the relay K1 of the Sunny Island during the operation with the Ecopower CHP. (“701_Man K1“ = Auto)
637_PDump2	W	0	8000	2000	Power of Dumpload 2, that has to be connected to the relay K6 of the Sunny Island during the operation with the Ecopower CHP. (“706_Man K6“ = Auto)
638_PBHKWMin	W	0	4000	2200	Minimum power of the Ecopower CHP
639_PBHKWMax	W	0	10000	4700	Maximum power of the Ecopower CHP
640_BHKW_Ton	s	0	10000	300	Minimum run-time of the Ecopower CHP

„PARALL“ (3+9)					
Parameter	**Unit**	**Min.**	**Max.**	**Default**	**Description**
641_BHKW_Toff	s	0	10000	300	Minimum pause time of the Ecopower CHP
642_BHKW_Tmax	s	0	20000	0	Maximum run-time of the Ecopower CHP in mode 2 (fast control)
644_PldOnLx	W	0	3300	0	The Ecopower CHP will be activated when this load at one phase has been exceeded
701_Man K1		0	2	0	Operating mode of relay K1 0: OFF: Switch relay K1 off 1: ON: Switch relay K1 on 2: AUTO: Sunny Island automatically controls relay K1.
702_Man K2		0	2	0	Operating mode of relay K2 0: OFF: Switch relay K2 off 1: ON: Switch relay K2 on 2: AUTO: Sunny Island automatically controls relay K2.
703_Man K3		0	2	0	Operating mode of relay K3 0: OFF: Switch relay K3 off 1: ON: Switch relay K3 on 2: AUTO: Sunny Island automatically controls relay K3.
704_Man K4		0	2	0	Operating mode of relay K4 0: OFF: Switch relay K4 off 1: ON: Switch relay K4 on 2: AUTO: Sunny Island automatically controls relay K4.

„PARALL“ (3+9)					
Parameter	**Unit**	**Min.**	**Max.**	**Default**	**Description**
705_Man K5		0	9	0	Operating mode of relay K5 0: OFF: Switch relay K5 off 1: ON: Switch relay K5 on 2: AUTO: Sunny Island automatically controls relay K5. 3: RUN: Relay is only switched on when the Sunny Island operates. 4: RUN_U: Relay is only switched on when the Sunny Island operates as the grid–forming element. 5: RUN_I: Relay is only switched on when the Sunny Island is in “grid-tied operation“. 6: HD_CTRL: Relay is switched during transfer from grid-forming to grid-tied operation. 7: TK_CTRL: Relay is switched during transfer from grid-tied to grid-forming operation. 8: HDTK_CTRL: Relay is switched during any transfer from grid-tied to grid-forming operation or vice versa. 9: GEN_MANU: Relay is switched if generator has already been started before the Sunny Island. 11: LOAD: Relay is switched in relation to load (see also parameter 625 to 630)

„PARALL“ (3+9)					
Parameter	**Unit**	**Min.**	**Max.**	**Default**	**Description**
706_Man K6		0	9	0	Operating mode of relay K6 0: OFF: Switch relay K6 off 1: ON: Switch relay K6 on 2: AUTO: Sunny Island automatically controls relay K6. 3: RUN: Relay is only switched on when the Sunny Island operates. 4: RUN_U: Relay is only switched on when the Sunny Island operates as the grid–forming element. 5: RUN_I: Relay is only switched on when the Sunny Island is in “grid-tied operation“. 6: HD_CTRL: Relay is switched during transfer from grid-forming to grid-tied operation. 7: TK_CTRL: Relay is switched during transfer from grid-tied to grid-forming operation. 8: HDTK_CTRL: Relay is switched during any transfer from grid-tied to grid-forming operation or vice versa. 9: GEN_MANU: Relay is switched if generator has already been started before the Sunny Island. 11: LOAD: Relay is switched in relation to load (see also parameter 625 to 630)
707_Man K7		0	2	0	Operating mode of relay K7 0: OFF: Switch relay K7 off 1: ON: Switch relay K7 on 2: AUTO: Sunny Island automatically controls relay K7.
708_Man K8		0	2	0	Operating mode of relay K8 0: OFF: Switch relay K8 off 1: ON: Switch relay K8 on 2: AUTO: Sunny Island automatically controls relay K8.
710_K1 t2 begin	h	0	23	0	Start of special period t2 for K1
711_K1 t2 end	h	0	23	0	End of special period t2 for K1

„PARALL“ (3+9)					
Parameter	**Unit**	**Min.**	**Max.**	**Default**	**Description**
712_K1 On t1		0	10	5	When this battery state is reached, K1 is switched on. 0: L4 deep-cycle discharge 1: L3 2: L2 3: L1 4: N4 5: N3 6: N2 7: N1 Battery full 8: O1 Overcharge 9: O2 10: O3
713_K1 Off t1		0	10	5	When this battery state is reached, K1 is switched off. 0: L4 deep-cycle discharge 1: L3 2: L2 3: L1 4: N4 5: N3 6: N2 7: N1 Battery full 8: O1 Overcharge 9: O2 10: O3
714_K1 On t2		0	10	5	Switch-on threshold for K1 in special period t2 (see 712)
715_K1 Off t2		0	10	5	Switch-off threshold for K1 in special period t2 (see 713)
716_K2 t2 begin	h	0	23	0	Beginning of special period t2 for K2 (see 710)
717_K2 t2 end	h	0	23	0	End of special period t2 for K2 (see 711)
718_K2 On t1		0	10	5	Switch-on threshold for K2 (see 712)
719_K2 Off t1		0	10	5	Switch-off threshold for K2 (see 713)
720_K2 On t2		0	10	5	Switch-on threshold for K2 in special period t2 (see 714)
721_K2 Off t2		0	10	5	Switch-off threshold for K2 in special period t2 (see 715)
722_K3 t2 begin	h	0	23	0	Beginning of special period t2 for K3 (see 710)

„PARALL“ (3+9)					
Parameter	**Unit**	**Min.**	**Max.**	**Default**	**Description**
723_K3 t2 end	h	0	23	0	End of special period t2 for K3 (see 711)
724_K3 On t1		0	10	5	Switch-on threshold for K3 (see 712)
725_K3 Off t1		0	10	5	Switch-off threshold for K3 (see 713)
726_K3 On t2		0	10	5	Switch-on threshold for K3 in special period t2 (see 714)
727_K3 Off t2		0	10	5	Switch-off threshold for K3 in special period t2 (see 715)
728_K4 t2 begin	h	0	23	0	Beginning of special period t2 for K4 (see 710)
729_K4 t2 end	h	0	23	0	End of special period t2 for K4 (see 711)
730_K4 On t1		0	10	5	Switch-on threshold for K4 (see 712)
731_K4 Off t1		0	10	5	Switch-off threshold for K4 (see 713)
732_K4 On t2		0	10	5	Switch-on threshold for K4 in special period t2 (see 714)
733_K4 Off t2		0	10	5	Switch-off threshold for K4 in special period t2 (see 715)
734_K5 t2 begin	h	0	23	0	Beginning of special period t2 for K5 (see 710)
735_K5 t2 end	h	0	23	0	End of special period t2 for K5 (see 711)
736_K5 On t1		0	10	5	Switch-on threshold for K5 (see 712)
737_K5 Off t1		0	10	5	Switch-off threshold for K5 (see 713)
738_K5 On t2		0	10	5	Switch-on threshold for K5 in special period t2 (see 714)
739_K5 Off t2		0	10	5	Switch-off threshold for K5 in special period t2 (see 715)
740_K6 t2 begin	h	0	23	0	Beginning of special period t2 for K6 (see 710)
741_K6 t2 end	h	0	23	0	End of special period t2 for K6 (see 711)
742_K6 On t1		0	10	5	Switch-on threshold for K6 (see 712)
743_K6 Off t1		0	10	5	Switch-off threshold for K6 (see 713)
744_K6 On t2		0	10	5	Switch-on threshold for K6 in special period t2 (see 714)
745_K6 Off t2		0	10	5	Switch-off threshold for K6 in special period t2 (see 715)
746_K7 t2 begin	h	0	23	0	Beginning of special period t2 for K7 (see 710)
747_K7 t2 end	h	0	23	0	End of special period t2 for K7 (see 711)
748_K7 On t1		0	10	5	Switch-on threshold for K7 (see 712)
749_K7 Off t1		0	10	5	Switch-off threshold for K7 (see 713)

„PARALL“ (3+9)					
Parameter	**Unit**	**Min.**	**Max.**	**Default**	**Description**
750_K7 On t2		0	10	5	Switch-on threshold for K7 in special period t2 (see 714)
751_K7 Off t2		0	10	5	Switch-off threshold for K7 in special period t2 (see 715)
752_K8 t2 begin	h	0	23	0	Beginning of special period t2 for K8 (see 710)
753_K8 t2 end	h	0	23	0	End of special period t2 for K8 (see 711)
754_K8 On t1		0	10	5	Switch-on threshold for K8 (see 712)
755_K8 Off t1		0	10	5	Switch-off threshold for K8 (see 713)
756_K8 On t2		0	10	5	Switch-on threshold for K8 in special period t2 (see 714)
757_K8 Off t2		0	10	5	Switch-off threshold for K8 in special period t2 (see 715)
801_Sunny Boys		0	2	0	0: Not installed: Sunny Island is not to control Sunny Boys. 1: Installed: Sunny Island is to control Sunny Boys. 2: Inst. Mains: Sunny Island only is to control Sunny Boys if grid feeding is not possible. 3: Frequency Sunny Island controls the Sunny Boys via grid frequency (This mode is only possible when the Sunny Boys are equipped with an advanced firmware)

15 Overview: Measured Values Displayed

Name	Unit	Min.	Max.	Default	Description
"DATSYS" (1-1)					
SN:					Serial number of device
Vers:					Firmware versions of BFR and DSP
UP:	h	0.0			Counter of operating hours

Name	Unit	Min.	Max.	Default	Description
"DATALL" (1-2), Passwort-Level: 1					
Status		0	13	0	Current operating state 0: INIT Initialization 1: INIT Initialization 2: STANDBY Waiting state 3: SLAVE Slave mode (three-phase operation) 4: STARTUP Start 5: RUN_U Inverter operation (island grid) 6: RUN_I Charging operation on grid or generator 7: GEN_MANU man. start of generator detected 8: HD_CTRL Transfer from RUN_U to RUN_I 9: TK_CTRL Transfer from RUN_I to RUN_U 10: SHUTDOWN Shutdown 11: ERRSHDWN Shutdown due to error 12: FAULT Fault state
Batt. Ah In	Ah	0	0	0	Ah into the battery
Batt. Ah Out	Ah	0	0	0	Ah out of the battery
W in	kWh	0	0	0	Input power AC side
W out	kWh	0	0	0	Output power AC-side
Energy Count	h	0	0	0	Run-time of energy counter
Up Time	h				Time since switch-on ("Up-Time")
Pconv Sum	kW	-320	320	0	Sum of grid active power SI (three phases)
Qconv Sum	kvar	-320	320	0	Sum of grid reactive power SI (three phases)
Sconv Sum	kVA	-320	320	0	Sum of grid apparent power SI (three phases)
Iconv Sum	A	0	640	0	Inverter current (three phases)
Pext Sum	kW	-320	320	0	Sum of generator active power (three phases)
Pext L1	kW	-320	320	0	Generator active power phase 1

Name	Unit	Min.	Max.	Default	Description
Pext L2	kW	-320	320	0	Generator active power at phase 2
Pext L3	kW	-320	320	0	Generator active power at phase 3
Iext Sum	A	0	640	0	Sum of generator current (three phases)
Psi L1	kW	-320	320		Grid active power of Sunny Island phase 1
Psi L2	kW	-320	320		Grid active power of Sunny Island phase 2
Psi L3	kW	-320	320		Grid active power of Sunny Island phase 3
Bat State		L4	O3	L1	Current battery state 0= L4 1= L3 2= L2 3= L1 4= N4 5= N3 6= N2 7= N1 8= O1 9=O2 10=O3
SOC act	%	-100	110	0	Battery state of charge
Pbat Sum	W	-32000	32000	0	Sum of battery power SI (three phases)
Ibat Sum	A	-320	320	0	Sum of battery current SI (three phases)
GenState		0	10	0	Generator state 0=none not active 1= off OFF 2=glow glowing up 3=crank cranking 4= warm warming up 5=run running 6=cool cooling down 7=Stopp stopping 8=lock locked after operation 9=fail failure 10=fail_look locked after multiple failure
GenFail		0	6	0	Generator failure state 0=none no failure 1=F_crank failure during cranking 2=F_warm failure during warming up 3=F_Run failure in operation 4=F_Runlim gen. falls short of minimum power 5=F_Cool failure during cooling down

Name	Unit	Min.	Max.	Default	Description
					6=F_Stop failure during stop (could not be stopped)
K1 State		0	1	0	State of relay 0=off 1=on
K2 State		0	1	0	State of relay
K3 State		0	1	0	State of relay
K4 State		0	1	0	State of relay
K5 State		0	1	0	State of relay
K6 State		0	1	0	State of relay
K7 State		0	1	0	State of relay
K8 State		0	1	0	State of relay
SB Step	%	-100	100	0	Current step size for Sunny Boy power limitation
Fext	Hz	0	100	0	Current grid frequency on synchronous input
Uext eff	V	0	500	0	RMS value of synchronous voltage
Iext eff	A	0	500	0	Current generator current (from converter)
Pext	kW	-320	320	0	Current generator active power
Ubat mean	V	0	200	0	Mean value of battery voltage
Ibat mean	A	-150	150	0	Mean value of battery current
Pbat mean	W	-32000	32000	0	Mean value of battery power
Tbat mean	degC	-25	125	0	Mean value of battery temperature
Uzw Cuk mean	V	0	500	0	Mean value of the intermediate circuit voltage
Fconv	Hz	0	100	0	Current grid frequency
Uconv eff	V	0	500	0	Current grid voltage actual value
Iconv eff	A	0	320	0	RMS value of grid current
Pconv	W	-32000	32000	0	Grid active power Sunny Island
Sconv	VA	-32000	32000	0	Grid apparent power SI
Qconv	var	-32000	32000	0	Grid reactive power SI
Uchrg act	V	0	200	0	Setpoint value of battery voltage
Cbat act	Ah	50	10000	100	Current battery capacity
SOC diff AHB	%	0	100	50	Error of charge degree for full charge degree calibration
Qdn full	Ah/ 100Ah	-10000	10000	0	Charge throughput (discharge) since last full charge
Qdn equal	Ah/ 100Ah	-10000	10000	0	Charge throughput (discharge) since last equalizing charge
tpast full	d	0	3700	0	Time since last full charge
tpast equal	d	0	3700	0	Time since last equalizing charge

Name	Unit	Min.	Max.	Default	Description
t Uconst chg	h	0	10	0	Time of constant U Phase for normal charges
t Uconst full	h	0	20	0	Time of constant U phase for full charges
t Uconst equal	h				Time of constant U phase for equalizing charges
Qd float	Ah/ 100Ah	-100	0	0	Charge taken out since beginning of float charge
ChargeOper		0	5	1	State of battery management (charging methods) 1= none (required charge voltage for battery management) 2= normal (normal charge) 3= FULL (full charge) 4= Float (float charge) 5= Equalize (equalizing charge)
SOC diff	%	0	100	50	Difference of charge degree calculation
SOC AHG	%	-100	110	50	Charge degree for full charge calibration
SOC RSK	%	-100	110	50	Charge degree of module for open-circuit voltage calibration

Name	Unit	Min.	Max.	Default	Description
“DATBAT“ (1+3)					
Bat State		0	10	0	Current battery state 0= L4 1= L3 2= L2 3= L1 4= N4 5= N3 6= N2 7= N1 8= O1 9=O2 10=O3
SOC act	%	-100	110	0	Battery charge degree
Ubat mean	V	0	200	0	Mean value of battery voltage
Uchrg act	V	0	200	0	Setpoint value of battery voltage
Ibat mean	A	-150	150	0	Mean value of battery current
Ibat Sum	A	-320	320	0	Sum of battery current SI (three phases)
Tbat mean	degC	-25	125	0	Battery temperature mean value
Pbat mean	W	-32000	32000	0	Battery power mean value

Name	Unit	Min.	Max.	Default	Description
Pbat Sum	W	-32000	32000	0	Sum of battery power SI (three phases)
SOC RSK	%	-100	110	50	Charge degree of module for open-circuit voltage calibration
SOC diff RSK	%	0	100	50	Error SOC for open-circuit voltage calibration
Cbat act	Ah	50	10000	100	Current capacity
Qdn full	Ah/ 100Ah	-10000	10000	0	Charge throughput (discharge) since last full charge
Qdn equal	Ah/ 100Ah	-10000	10000	0	Charge throughput (discharge) since last equalizing charge
tpast full	d	0	3700	0	Time since last full charge
tpast equal	d	0	3700	0	Time since last equalizing charge
t Uconst chg	h	0	10	0	Time of constant U phase for normal charges
t Uconst full	h	0	20	0	Time of constant U phase for full charges
t Uconst equal	h	0	40	0	Time of constant U phase for equalizing charges
ChargeOper		0	5	1	State of battery management (charging method) 1= none (required charge voltage for battery management) 2= normal (normal charge) 3= FULL (full charge) 4= Float (float charge) 5= Equalize (equalizing charge)
SOC AHB	%	0		0	Charge degree for full charge calibration

Name	Unit	Min.	Max.	Default	Description
“DATGRD“ (1+4)					
Uconv eff	V	0	500	0	Current grid voltage actual value
Fconv	Hz	0	100	0	Current grid frequency
Iconv eff	A	0	320	0	Averaged grid current
Iconv Sum	A	0	640	0	Inverter current (three phases)
Pconv	W	-32000	32000	0	Grid active power Sunny Island
Pconv Sum	kW	-320	320	0	Sum of grid active power SI (three phases)
Qconv	var	-32000	32000	0	Grid reactive power SI
Qconv Sum	kvar	-320	320	0	Sum of grid reactive power SI (three phases)
Sconv	VA	-32000	32000	0	Grid apparent power SI
Sconv Sum	kVA	-320	320	0	Sum of grid apparent power SI (three phases)
Uext eff	V	0	500	0	RMS value of synchronous voltage
Fext	Hz	0	100	0	Current grid frequency on synchronous input

Name	Unit	Min.	Max.	Default	Description
Iext eff	A	0	500	0	Current generator current (of converter)
Iext Sum	A	0	640	0	Sum of generator current (three phases)
Pext	kW	-320	320	0	Current generator active power
Pext Sum	kW	-320	320	0	Sum of generator active power (three phases)

16 Terminal Diagrams for Generator Options

For simple and fast installation you can see on the following pages examples for wiring to connect a generator to an island system. The examples are based on single-phase island systems. In principle the same installation measures have to be performed when erecting a three-phase island system. Three-phase options are not shown here so as not to confuse the reader.

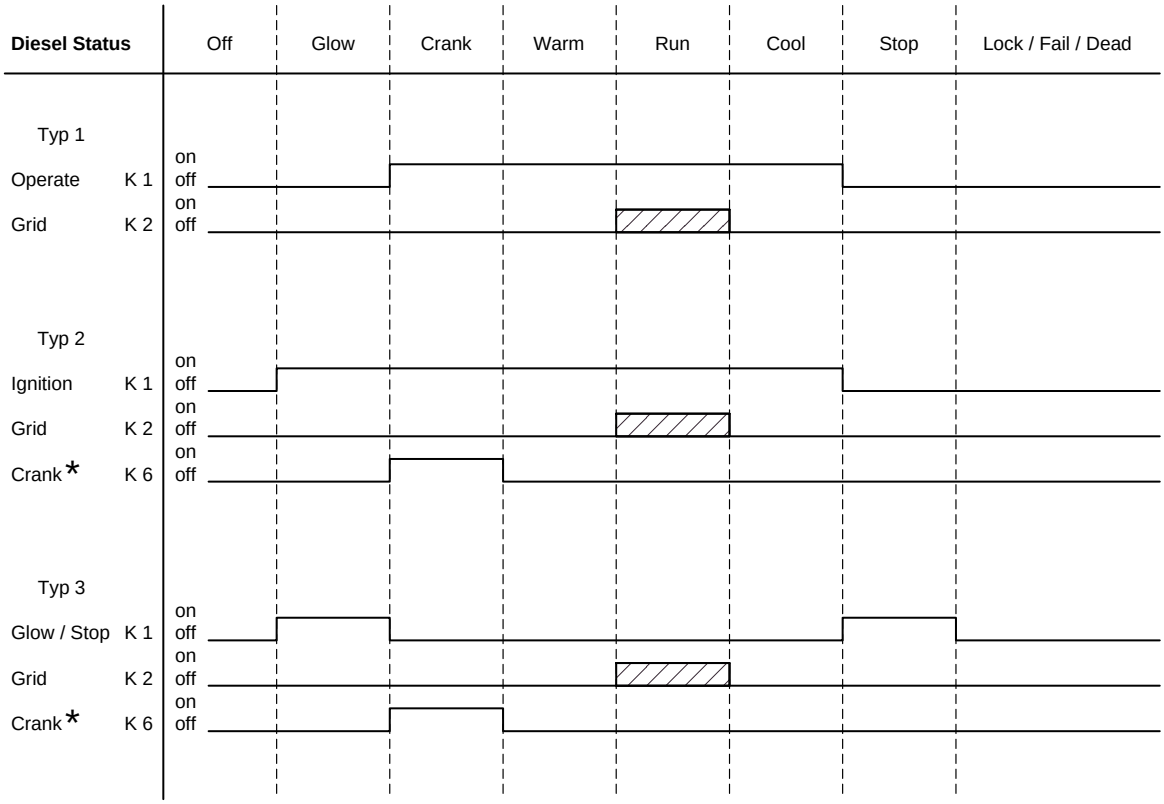

Fig. 16.1: Starting phase sequence for different generator types

* depending on the firmware version, other relays are used for this feature (see Table 8.5)

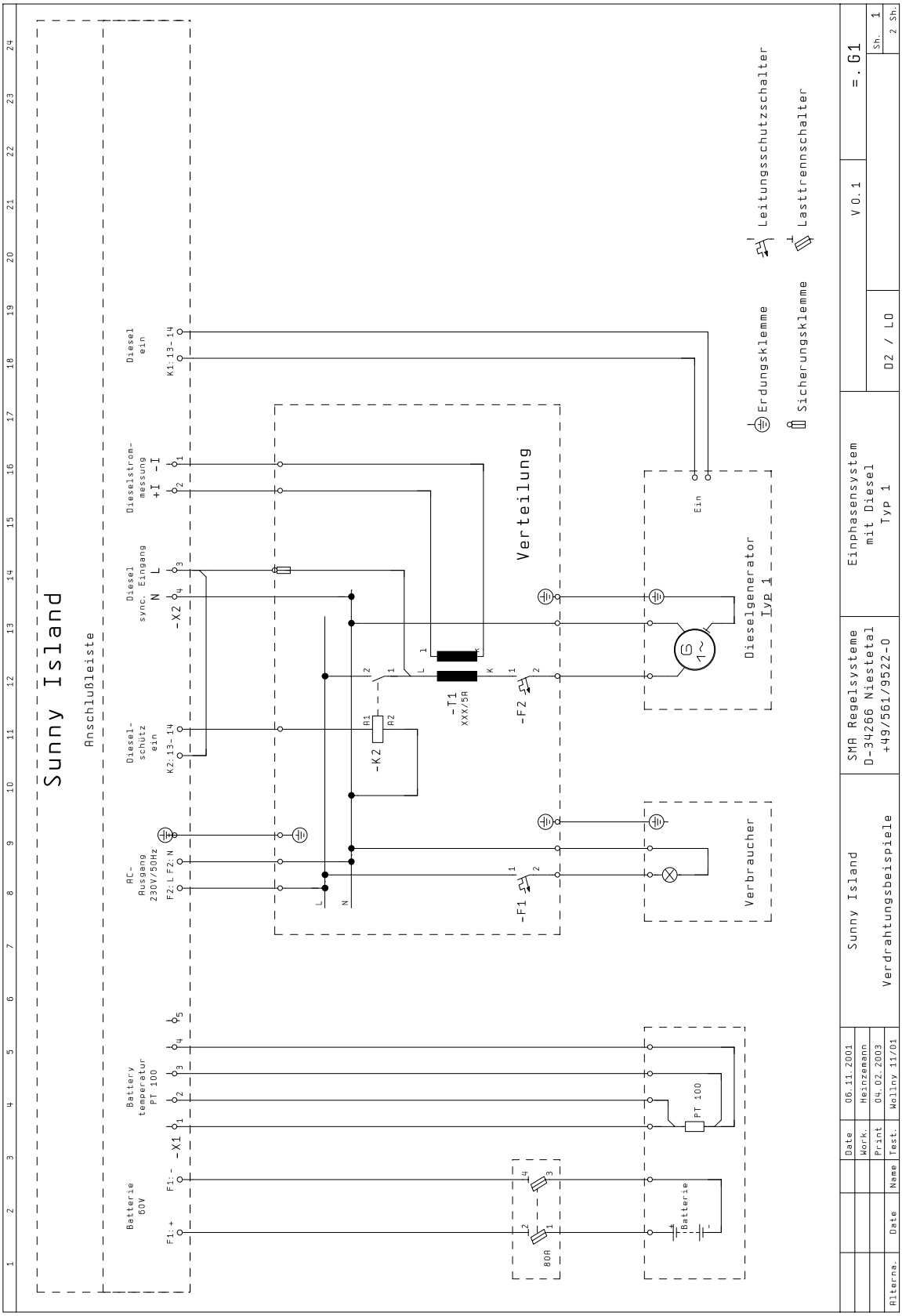

Fig. 16.2: Single-phase island system with generator “type 1“ (automatic start)

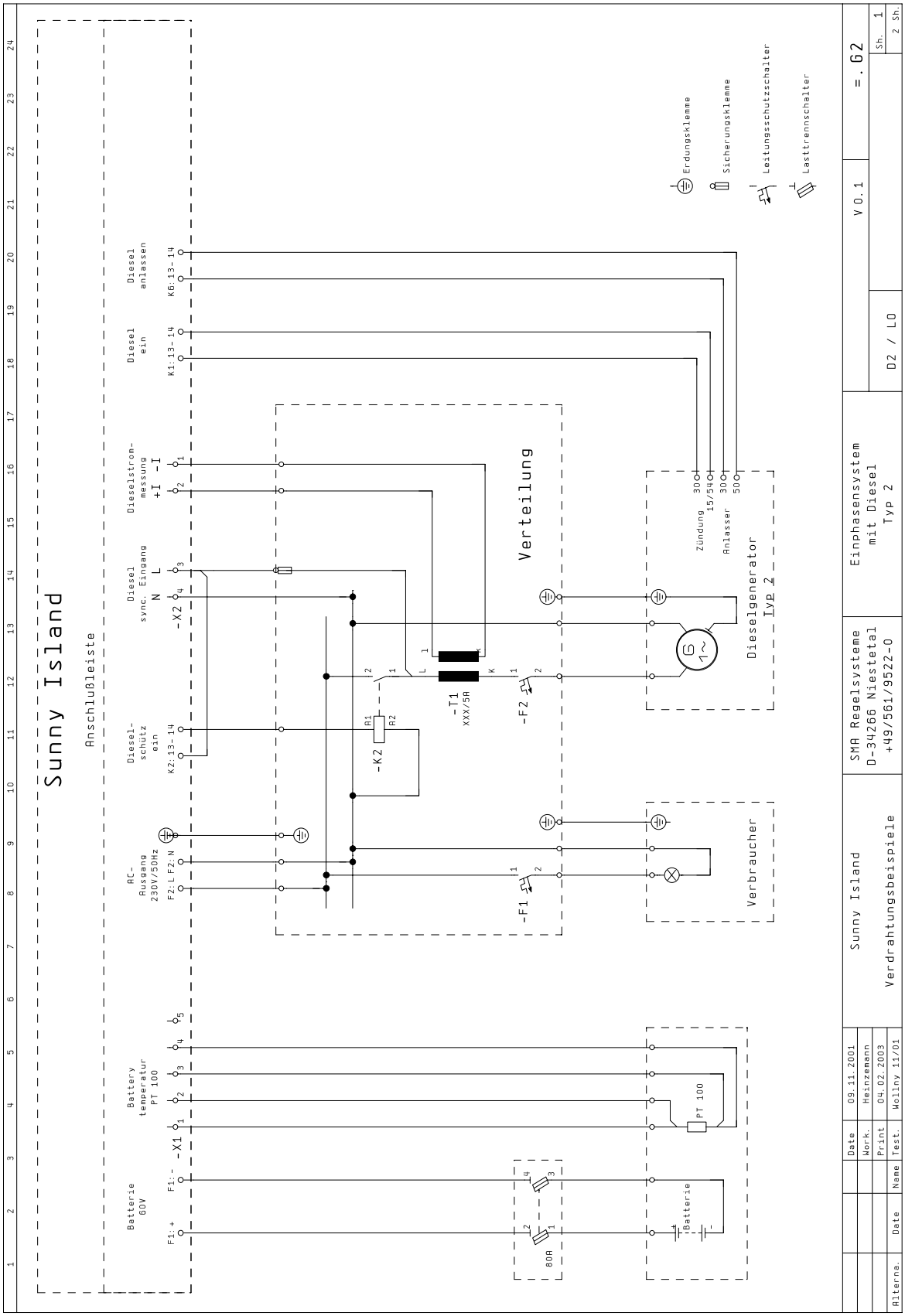

Fig. 16.3: Single-phase island system with generator “type 2“

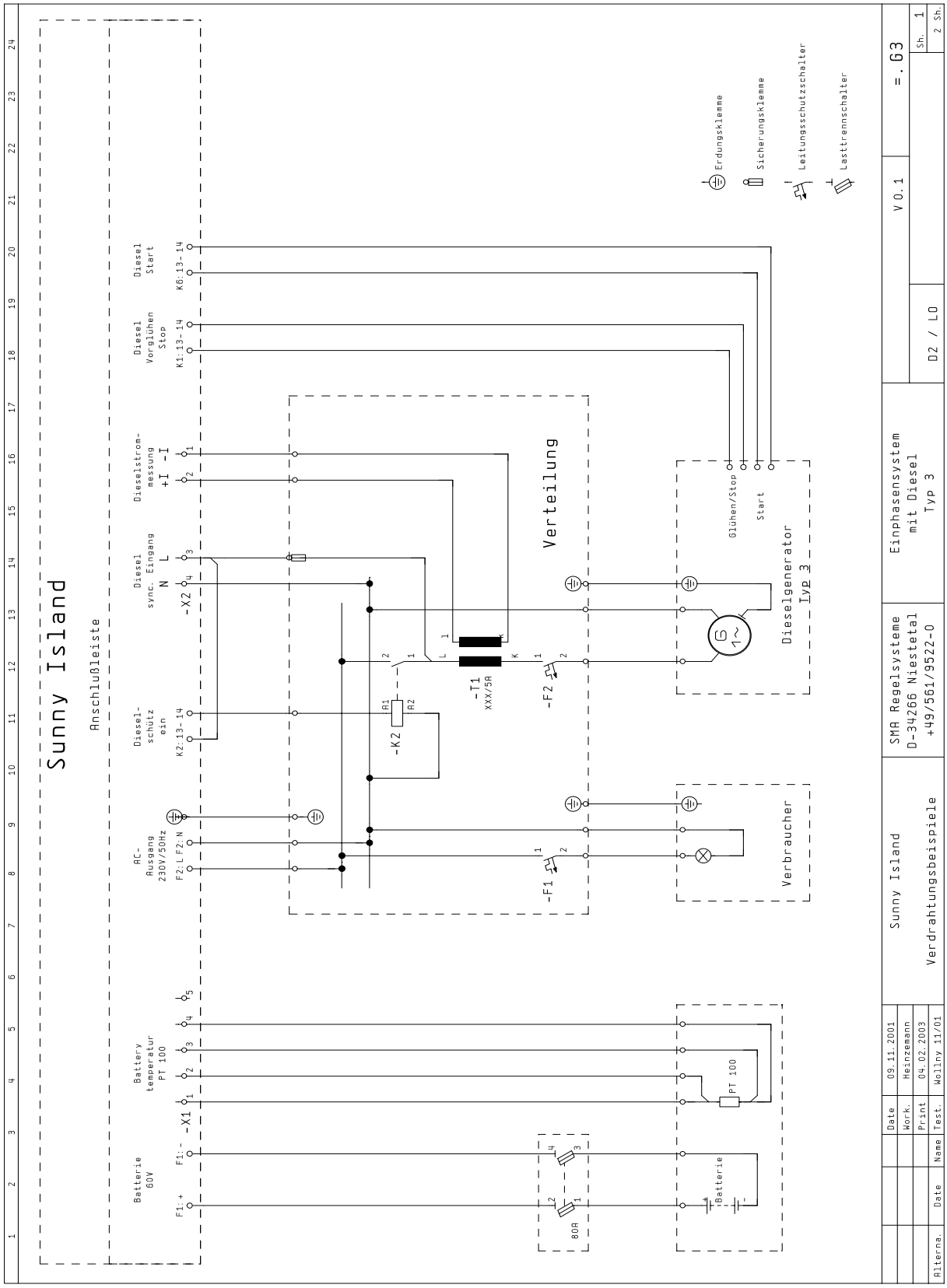

Fig. 16.4: Single-phase island system with generator “type 3“

External charge of the battery

In plants with a scarce battery storage capacity and without a motorized generator, i. e. where the only feeders are photovoltaic or wind generators, it may become necessary to have the battery recharged by a mobile generator. This can be the case when unfavorable weather conditions persist for a longer time period.

For this purpose the operator can use a special terminal box available from SMA as an accessory (SMA order name “SI-GENCASE.01“) which can be firmly installed in the plant. The circuit diagram is shown in Fig. 16.5. The figure also shows the connection of an external generator in different operating modes and includes instructions for operation.

According to the current configuration, it may be necessary to change several parameters, so that the following settings apply:

Parameter	**Value**
401_Phase Mode	1Phs_Single (see chapter 8.4)
602_GenSet Type	Grid forming
603_GenSet Interf	Typ 1
702_Man K2	AUTO

Table 16.1: Setting for the external charge of the battery

In addition, the automatic generator control of the Sunny Island must not be deactivated (menu „GENSET“ (2-2), see chapter 7.2).

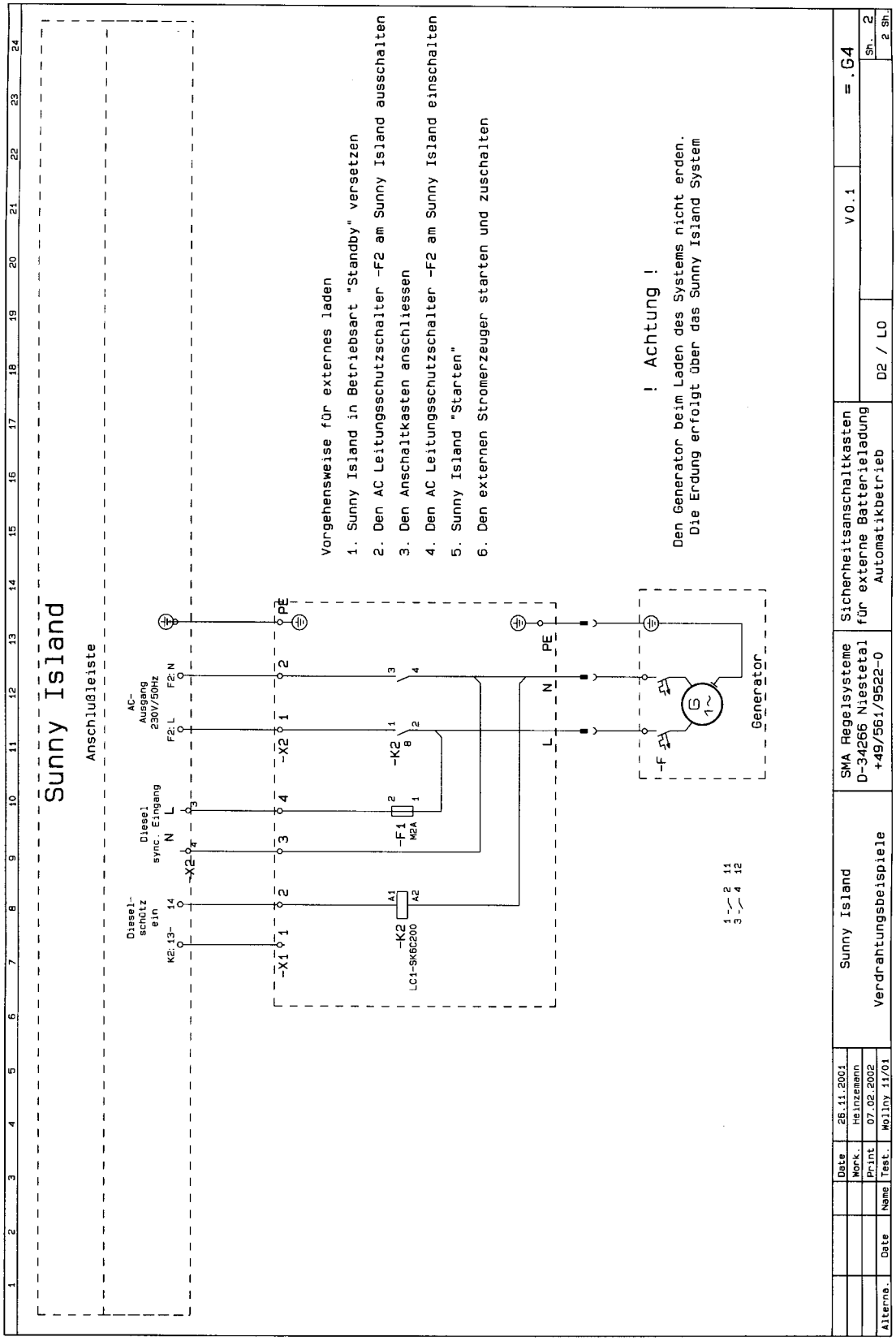

Fig. 16.5: External charging of the battery by an auxiliary generator

17 Error and Status Signals

The following list provides an overview of possible error and status signals of the Sunny Island. These are e. g. used in the menu branch “DIAG“. In case of an acute error the signal is also directly shown on the display for a short time.

The status signals are meant to provide information on the status the plant is in. They also allow optimum configuration of system settings.

If error signals are shown on the display repeatedly without any apparent reason (such as an operating error), please write down the error signal and contact the manufacturer (see chapter 22).

17.1 Error Signals

Nr.	Ackn	Display	Reason
A0001, A0002		Internal Error	Invalid adjustment data
A0003	x	Internal Error	Error during hardware test
A0004		Internal Error	Watchdog Reset
A0005	x	Internal Error	Error during start-up
A0006	x	Internal Error	Invalid data in data flash
A0007-A0011		Internal Error	Violation of plausibility limit values
A0012	x	Internal Error	Error in control system
A0013-A0022	x	Internal Error	Exceeding of limit values (DC side)
A0023-A0031	x	Internal Error	Exceeding of limit values (AC side)
A0032-A0037		Internal Error	Violation of plausibility limits of internal measured values
A0038	x	Internal Error	DSP timeout
A0039		Overtemp Battery	Battery temperature rise (parameter)

Nr.	Ackn	Display	Reason
A0040	x	Battery Low	Battery state under limit value L4 or parameter
A0041		Battery Temp Sense fail	Battery temperature sensor fails (break, short-circuit)
A0042		Battery Voltage Low	Undervoltage of battery
A0043		Battery Voltage High	Overvoltage of battery
A0044		High Grid Volt	Overvoltage in the grid (parameter or fixed DSP limits)
A0045		Low Grid Volt	Undervoltage in the grid (parameter or fixed DSP limits)
A0046		High Grid Freq	Overfrequency in the grid (parameter or fixed DSP limits)
A0047		Low Grid Freq	Underfrequency in the grid (parameter or fixed DSP limits)
A0048	x	Unexp Grid State	Unexpected grid voltage/frequency at the inverter input port
A0049	x	Contactor or Fuse	Failure of grid relay or fuse
A0050	x	Sync error	Switching of operating mode failed
A0051		Genset start failed	Generator start failed
A0052		Genset reverse power	Energy was refed into the generator
A0053		Sync signal failed	DSP Sync signal failed
A0054		SI Communication error	Communication error in interconnection mode (COM1)
A0055		Slave Errors	One of the slaves announces error

Table 17.1: Error signals

17.2 Status Signals (“Events“)

Nr.	Signal	Description
E0001	Reset	Restart of system
E0002	Set Date/Time	Date/time set
E0003	Inval EE SIH	Invalid adjustment data detected – device uses defaults
E0004	Inval EE CNV	Invalid adjustment data detected – device uses defaults
E0005	Inval EE CUK	Invalid adjustment data detected – device uses defaults
E0006	Parameter Default	Parameters set to defaults
E0007	BMS: New System	Restart of battery management via “New System“, the automatiaclly adapted internal values of the battery characteristics have been reset
E0008	BMS: New Battery	Restart of battery management via “New Battery“, the automatiaclly adapted internal values of the battery characteristics have been reset
E0009	BMS: Restart	Restart, the battery management keeps on working with the present internal values for the battery characteristics
E0012	SYSINIT	Initial state
E0014	STANDBY	Operating state StandBy
E0015	SLAVE	Device was reconfigured as slave
E0016	STARTUP	Start-up process
E0017	RUN_U	Grid-forming operation
E0018	RUN_I	Grid-tied operation
E0019	GEN_MANU	Running generator detected during start-up
E0020	HD_CTRL	Transfer from RUN_U to RUN_I
E0021	TK_CTRL	Transfer from RUN_I to RUN_U
E0022	SHUTDOWN	Transfer to STANDBY
E0023	ERRSHDWN	Transfer to STANDBY due to failure
E0024	FAULT	Failure state
E0026	Bat L4	Battery state L4 has been reached
E0027	Bat L3	Battery state L3 has been reached
E0028	Bat L2	Battery state L2 has been reached
E0029	Bat L1	Battery state L1 has been reached
E0030	Bat N4	Battery state N4 has been reached
E0031	Bat N3	Battery state N3 has been reached
E0032	Bat N2	Battery state N2 has been reached
E0033	Bat N1	Battery state N1 has been reached

Nr.	Signal	Description
E0034	Bat O1	Battery state O1 has been reached
E0035	Bat O2	Battery state O2 has been reached
E0036	Bat O3	Battery state O3 has been reached
E0047	K1 ON	Relay K1 switched on
E0048	K1 OFF	Relay K1 switched off
E0049	K2 ON	Relay K2 switched on
E0050	K2 OFF	Relay K2 switched off
E0051	K3 ON	Relay K3 switched on
E0052	K3 OFF	Relay K3 switched off
E0053	K4 ON	Relay K4 switched on
E0054	K4 OFF	Relay K4 switched off
E0055	K5 ON	Relay K5 switched on
E0056	K5 OFF	Relay K5 switched off
E0057	K6 ON	Relay K6 switched on
E0058	K6 OFF	Relay K6 switched off
E0059	K7 ON	Relay K7 switched on
E0060	K7 OFF	Relay K7 switched off
E0061	K8 ON	Relay K8 switched on
E0062	K8 OFF	Relay K8 switched off
E0063	Frequency increm. ON	Frequency increment active (see chapter 8.8)
E0064	Frequency increm. OFF	Frequency increment finished
E0065	SI Autostart	Automatic start of Sunny Island performed
E0066	SI Man Start	Manual start of Sunny Island performed (via menu)
E0067	SI Man Stop	Manual stop of Sunny Island performed (via menu)
E0068	Genset Autostart	Automatic start of generator performed (battery state-controlled)
E0069	Genset Man Start	Manual start of generator performed (via menu)
E0070	Genset Man Stop	Manual stop of generator triggered (via menu) – if required generator will run on until its min. run time has expired.
E0071	Genset Man Ackn	Acknowledgement of failures, overwriting waiting time – if required generator stopped immediately
E0072	SLAVE STANDBY	Sunny Island is slave and has switched to standby.
E0073	SLAVE DCLINK	Sunny Island is slave and has switched to DC-LINK state.
E0074	SLAVE CONV	Sunny Island is slave and has switched to RUN_U mode.
E0075	SLAVE CONVDR	Sunny Island is slave and has switched to droop mode.

Nr.	Signal	Description
E0076	SLAVE CHARGE	Sunny Island is slave and has switched to RUN_I mode.
E0077	SLAVE ERROR	Sunny Island is slave and in failure state.
E0078	SLAVE ACKN	Sunny Island is slave and has received acknowledge.
E0079	Frequency decrem. ON	Frequency lowering started (only in special configurations)
E0080	Frequency decrem. OFF	Frequency lowering stopped (only in special configurations)

Table 17.2: Status signals

18 Technical Data

Power unit

AC output power (30 min @ Tu = 20 °C)	$P_{AC, 30}$	4300 VA'*[1]
Nominal output power:	P_{nom}	3300 VA
Max. efficiency:	η_{max}	≥ 90 %

Voltages, currents

Nominal battery voltage:	$V_{Bat, nom}$	60 V =
Battery voltage range:	V_{Bat}	46 V ... 81 V =
Nominal battery current:	$I_{Bat\ nom}$	60 A =
Max. battery current:	$I_{Bat\ max}$	125 A =
Nominal AC voltage:	V_{ACnom}	230 V ~
AC voltage range:	V_{AC}	196 V - 253 V ~
AC nominal current:	I_{ACnom}	14.5 A_{eff}
Nominal frequency:	f_{nom}	50 Hz
Frequency range:	f	48 Hz ... 62 Hz
Harmonic distortion in output voltage:	K_{VAC}	< 3 %
		(with K_{Ugrid} < 2 %, P_{AC} > 0.5 P_{ACnom})

*[1] typical value for V_{bat} > 60 V, see chapter 12.3

Overload capacity:	triggering of automatic circuit breakers “R“ according to IEC/EN 60947
Switching time grid/inverter operation: active: passive:	 approx. 0 sec. approx. 1 sec.
Voltage ripple:	V_{pp} < 5 %
Pole confusion prevention:	none
Short-circuit proof:	on grid side due to current control
Phase differential factor:	cos φ 1
EMC:	EN 50081-1 EN 55022 / class B (EN 50981-1) EN 55011/ class B
Grid interference:	EN 55014-1
Test voltage:	1,5 kV ~ (AC vs. PE) 1,5 kV ~ (AC vs. DC) 700 V = (DC vs. PE)

Certification

CE Declaration of Conformity:	yes

Protection degree

Protection degree acc. to IEC 60529:	IP20

Dimensions and weight

Dimensions (width x height x depth):	510 x 560 x 270 mm
Weight:	approx. 45 kg

Ambient conditions

Ambient temperature range (permissible): -25 °C to +45 °C

Relative humidity (permissible): 0 ... 93 %, non-condensing

Limit curves of relays (accessories)

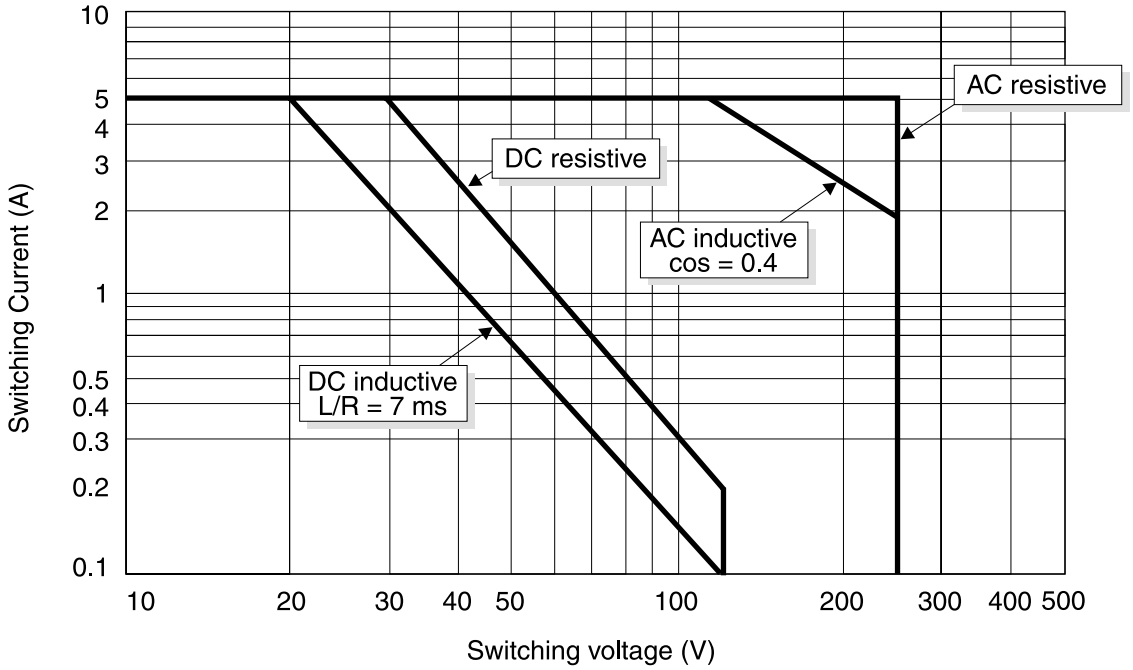

Fig. 18.1: Limit curves of relays

19 Servicing and Maintenance

The Sunny Island was designed as a robust device which requires extremely little servicing. A few standard servicing tasks have to be fulfilled which can be easily combined with servicing of other components in the island grid (lead-acid battery, diesel generator etc.).

Device batteries

The inverter only puts a load on the three LR6 (AA, round) batteries in the terminal area of the Sunny Island if it is not in operation, i. e. it is supplied neither by the lead-acid battery nor by the AC grid. If not under load the batteries have to be exchanged every five years only. Only replace them with alkaline cells of equal quality. For environmentally friendly disposal of used cells follow the instructions of the local authorities.

In case of increased ambient temperatures and frequent long-term switch-off of the Sunny Island it may be necessary to exchange the batteries approximately every six months. Please also follow the battery manufacturer's instructions!



In normal operation the batteries are not urgently required for Sunny Island operation. In case of a failure, however, important data can be lost without the batteries. These data could otherwise help you considerably in finding the cause of the failure. Keep in mind that warranty may be restricted in certain cases if data is lost due to improper servicing of the batteries.

Connections

Annually check the incoming cables including the terminal area of the Sunny Island for any visible damage and loosened mechanical connections. Apart from visual in-

spections, any intervention in the terminal area always has to be performed by a qualified technician (see safety instructions in chapter 1.3)!

If any incoming cables are damaged the Sunny Island has to be disconnected from all power supply units. The failures then have to be repaired by a qualified electrician.

Enclosure

Check the enclosure of the Sunny Island for mechanical integrity. Should there be any damages reducing the Sunny Island's operating safety (cracks, holes, fissures, missing covers) the Sunny Island has to be decommissioned immediately!

Large dirt particles should be removed from the device with a soft hand brush or a similar tool. Fine dust can be wiped off the enclosure parts with a soft moistened cloth. Cleaning agents containing solvents or abrasives should not be used to avoid scratching the paint layer.

The Sunny Island has lateral ventilation grates. These should be kept clear of dust and other deposits to ensure reliable and powerful operation. These grates can be best cleaned with soft brushes. During cleaning make sure to keep dust from entering the inverter. Cleaning intervals depend on local conditions as well as the operating mode of the Sunny Island and are to be determined in an inspection which first should be made every three months.

User interface, display

The user interface can best be cleaned with a soft moistened cloth. Cleaning agents containing solvents or abrasives may not be used!



Avoid unintentionally touching the membrane keys during cleaning which could trigger unwanted functions! Either clean the membrane keyboard while the device is switched off or make sure password protection is activated (level: 0, see chapter 8.2).

Function

Regularly check whether there are any failures which have to be confirmed as described in chapter 10. If you do not find a plausible explanation for a failure, have the island grid examined by a qualified technician. Especially in the first months after commissioning of the island grid we recommend to check the inverter in short intervals (monthly or even weekly). This can help you detect hidden faults in installation or configuration.

Spot-check and evaluate the entries in the menu branch ”DIAG” (0-4). In case of any inconsistencies have a qualified technician upgrade configuration of your island system. We recommend to check and evaluate the entries very frequently in the first months after commissioning.

Parameters

As long as the layout of the island grid is not changed it is not necessary to adjust the device parameters over time. The Sunny Island is capable of automatically taking into account deviations which e. g. may be caused by ageing of the battery. Parameter ”538_lloss nom” is an exception as it should be adjusted to the (estimated) ageing state of the battery from time to time as described in chapter 14.

To make sure the control functions based on system time are performed correctly and status and error messages are assigned the correct time of occurrence you should check the system time from time to time and adjust it if required.

20 Warranty and Liability Regulations

Warranty

You have acquired a product which was subjected to an careful inspection before dispatch. The statutary warranty period is **24 months** from the date of purchase by the end user. It covers defects based on faulty manufacturing, material or processing of the device. Should your inverter show a defect or malfunction within the warranty period please contact your distributor or installer.

In addition SMA grants a six-month warranty for repairs or compensation deliveries. This six-month period applies in case the original warranty period expires in the meantime.

Evidence

SMA will only render warranty services if the rejected device is returned to SMA together with a copy of the invoice the distributor has issued to the consumer. The type plate at the device must be fully legible. In case of non-fulfillment SMA reserves the right to refuse warranty services free of charge.

Conditions

SMA will decide whether it will repair the device in its works without invoicing material and labor costs or deliver a replacement device.

The rejected device is to be returned to SMA in the original packing or in a transport packing of equal quality free of charge.

The customer has to grant SMA the necessary time and opportunity to repair the defects.

Exclusion of Liability

The above rights held by the customer and any liability by SMA are excluded in case of damages due to

- transportation damages,
- improper installation or commissioning,
- improper alterations, modification or repairing attempts,
- inappropriate use or operation,
- insufficient air supply to the device,
- non-compliance with relevant safety regulations (VDE etc.),
- non-fulfillment of maintenance instructions if applicable,
- force majeure (e. g. lightning, over-voltage, storm, fire).

Any liability in case of more extensive damage claims is excluded if not compelling as stated by law.

We do not guarantee that the software is completely free of failures. In case of a failure an instruction how to avoid the effects of the fault is also considered as sufficient repair. Only the customer is responsible for the correct selection, orderly use, supervision and the results of the use of software.

SMA reserves the right to make alterations serving the improvement of the device.

21 Declaration of Conformity

DECLARATION OF CONFORMITY

for Island Inverters

Product: Sunny Island
Type: SI3300

We declare that the SI3300 complies with the relevant regulations of the European Union, especially the EMC regulation according to 89/336/EWG and the low voltage regulation according to 73/23/EWG. The inverter is therefore marked with a CE sign.

The device especially complies with

DIN EN 50081, part 1
DIN EN 50082, part 1
DIN EN 50178 (04.98) (VDE 0160)
DIN EN 61000-3-2 in charging operation

Niestetal, 08-05-2002

SMA Regelsysteme GmbH

i.V. Mike Meinhardt
(Head of Island Grid Components Development)

INDUSTRIAL COMPUTERS - SOLAR TECHNOLOGY - RAILWAY TECHNOLOGY

SMA America, Inc. • 20830 Red Dog Road, Grass Valley, CA 95945
Phone 530-273-4895 • Fax 530-274-7271
www.SMA-AMERICA.com • e-mail: info@SMA-AMERICA.com

SMA Regelsysteme GmbH • Hannoversche Straße 1-5, D-34266 Niestetal
Tel. (+49) 5 61 95 22 - 0 • Fax (+49) 5 61 95 22 - 100
www.SMA.de • e-mail: info@SMA.de

22 Contact

SMA Regelsysteme GmbH

Hannoversche Straße 1 – 5

34266 Niestetal

Germany

Tel.: +49 561 95 22 499

Fax: +49 561 95 22 4609

E-mail: hotline@sma.de

Internet: http://www.sma.de

23 List of Figures

Fig. 2.1: Components of the battery inverter 13

Fig. 3.1: Mounting slide with fastening points.....19

Fig. 3.2: Side view of the Sunny Island with dimensions.....20

Fig. 3.3: Cable glands and terminals of the Sunny Island.....22

Fig. 3.4: Terminal strip of the Sunny Island 23

Fig. 3.5: Connection of battery to the Sunny Island 27

Fig. 3.6: Connection of a temperature sensor 28

Fig. 3.7: AC voltage connection 29

Fig. 3.8: Connection of generator current and voltage measurement 30

Fig. 3.9: Power loss due to the secondary circuit to the inverter 31

Fig. 3.10: Connection of a (diesel) generator 32

Fig. 3.11: Example of connection for an accelerated switch-over (generator).....33

Fig. 3.12: Connection to an external utility 35

Fig. 3.13: Connection for an accelerated switch-over (utility).....36

Fig. 3.14: Connection to generator and utility.....38

Fig. 3.15: Example of an accelerated switch-over (generator and utility) 39

Fig. 3.16: Connection of a battery room fan and electrolyte pump 40

Fig. 3.17: Connection of an additional load (“dump load“) 41

Fig. 3.18: Interfaces of the Sunny Island 43

Fig. 3.19: Recommended cable for RS485 communication 45

Fig. 3.20: Connection of Sunny Boys at Sunny Island’s COM2 (RS485) 47

Fig. 3.21: Data communication with serial interface 49

Fig. 3.22: Communication in a three-phase island grid 51

Fig. 4.1: Operation of the Sunny Island 52

Fig. 4.2: Menu structure 56

Fig. 5.1: Start-up phase of the Sunny Island 58

Fig. 5.2: System message of the Sunny Island 58

Fig. 5.3: “INIT” menu (0-0) 59

Fig. 5.4: Status / Menu selection “DATA“ (0-1) 59

Fig. 6.1: Display to enter password 62

Fig. 6.2: Display to enter password 66

Fig. 7.1: Menu selection “OPERAT“ (0-2) 69

Fig. 7.2: Menu branch “OPERAT“ (0-2) 69

Fig. 7.3: Menu “START“ (2-1) 70

Fig. 7.4: Menu “GENSET“ (2-2) 71

Fig. 7.5: Menu “FUNCT“ (2+3) 73

Fig. 7.6: Menu „BHKW“ (2+5) 74

Fig. 8.1: Menu selection “SETUP“ (0-3) 75

Fig. 8.2: Menu branch “SETUP“ (0-3) 76

Fig. 8.3: Menu “SETTIM“ (3-1) 76

Fig. 8.4: Menu “PASSWD“ (3-2) 77

Fig. 8.5: Menu “PARSYS“ (3+3) 78

Fig. 8.6: Menu “PARGRD“ (3+4) 80

Fig. 8.7: Menu “PARBAT“ (3+5) 81

Fig. 8.8: Menu “PARGEN“ (3+6) 85

Fig. 8.9: Menu “PARREL“ (3+7) 89

Fig. 8.10: Setting of relays as a function of battery charge degree 91

Fig. 8.11: Menu “PARSB“ (3+8) 95

Fig. 8.12: Menu “PARALL“ (3+9) 96

Fig. 9.1: STATUS and menu selection “DATA“ (0-1) 97

Fig. 9.2: Menu branch “DATA“ 97

Fig. 9.3: STATUS and state of the relay 98

Fig. 9.4: Menu „DATAV“ (1-0).....99

Fig. 9.5: Menu “DATSYS (1-1) 100

Fig. 9.6: Menu “DATALL“ (1-2).....100

Fig. 9.7: Menu “DATBAT“ (1-3) 102

Fig. 9.8: Menu “DATGRD“ (1+4) 104

Fig. 10.1: Menu selection “DIAG“ (0-4).....106

Fig. 10.2: Menu branch “DIAG“ 107

Fig. 10.3: Menu “ACKN“ (4-1).....108

Fig. 10.4: Menu “HISTOR“ (4-2).....108

Fig. 10.5: Menu “ERRHIS“ (4-3).....109

Fig. 10.6: Menu “EVTHIS“ (4-4).....109

Fig. 11.1: Battery states with charging methods.....112

Fig. 11.2: Dependency of the battery state on the charge degree and possible switching operations.....113

Fig. 12.1: Sunny Island as grid-forming element.....117

Fig. 12.2: Sunny Island with external grid-former.....118

Fig. 13.1: Sunny Island (single phase) with generator and PV.....121

Fig. 13.2: Sunny Island with PV, generator and public utility (single-phase).....126

Fig. 13.3: Sunny Islands with PV and generator (three-phase).....128

Fig. 16.1: Starting phase sequence for different generator types.....152

Fig. 16.2: Single-phase island system with generator “type 1“ (automatic start).....153

Fig. 16.3: Single-phase island system with generator “type 2“.....154

Fig. 16.4: Single-phase island system with generator “type 3“.....155

Fig. 16.5: External charging of the battery by an auxiliary generator 157

Fig. 18.1: Limit curves of relays.....165

24 List of Tables

Table 3.1: Description of terminal strip 24

Table 3.2: Assignment of COM1 (SYNC BUS) interface 44

Table 3.3: Assignment of COM2 interface (RS485 / RS232) 45

Table 3.4: Assignment of Sunny Island interface (COM3) 50

Table 4.1: Meaning of symbols 53

Table 4.2: Function of keys 53

Table 4.3: Key combination to set up display 54

Table 4.4: Key combination for fast return to status display 54

Table 4.5: Contents of the four menu branches 57

Table 6.1: Parameters to be entered for configuration via “New System“ 64

Table 6.2: Parameters to be entered for configuration via “New Battery“ 67

Table 7.1: Settings for the menu “GENSET“ (2-2) 73

Table 7.2: Settings in the menu „BHKW“ (2+5) 74

Table 8.1: Settings in menu “PARSYS“ (3+3) 79

Table 8.2: Settings in menu “PARGRD“ (3+4) 81

Table 8.3: Settings in menu “PARBAT“ (3+5) 84

Table 8.4: Settings in menu “PARGEN“ (3+6) 88

Table 8.5: Special functions of relays 92

Table 8.6: Settings in the menu “PARREL“ (3+7) 94

Table 8.7: Settings in the menu “PARSB“ (3+8) 95

Table 9.1: Spot values shown in “DATA“ (0-1) 98

Table 9.2: Values shown in „DATAV“ (1-0) 99

Table 9.3: Menu “DATSYS“ (1-2), password level: 0 101

Table 9.4: Menu “DATBAT“ (1+3) 103

Table 9.5: Menu “DATGRD“ (1+4) 105

Table 10.1: Displayed menu selection “DIAG“ (0-4) 107

Table 11.1: Classification of battery states 114

Table 11.2: Battery states and recommended measures 114

Table 13.1: Summary of parameters to be configured 122

Table 13.2: Summary of parameters to be configured 125

Table 13.3: Summary of parameters to be configured 127

Table 13.4: Summary of parameters to be configured 129

Table 17.1: Error signals 159

Table 17.2: Status signals 162