Operating Instructions

Fronius Primo GEN24
8.0 Plus / 10.0 Plus

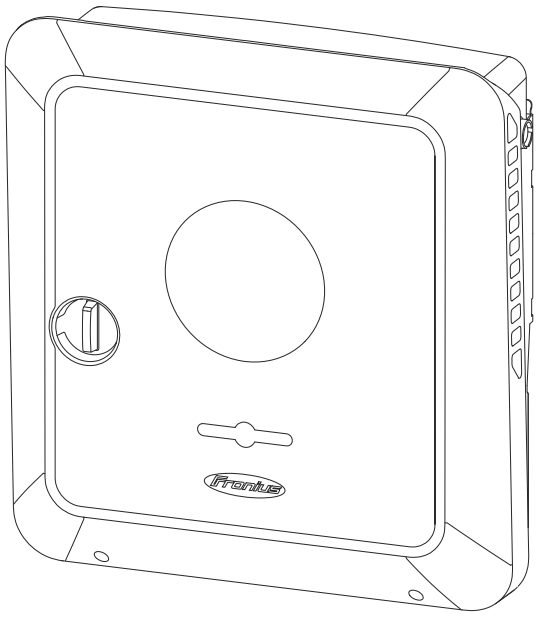

EN | Operating Instructions

42,0426,0419,EN 024-02062024

Contents

Safety rules ... 9
Explanation of safety notices ... 9
Safety ... 9
General ... 9
Environmental conditions ... 10
Qualified personnel ... 10
Noise emission values ... 10
EMC measures ... 11
Backup power ... 11
Data protection ... 12
Copyright ... 12
Protective earthing (PE) ... 12

General information **13**

Fronius Primo GEN24 ... 15
Device concept ... 15
Function overview ... 15
Fronius UP ... 16
Scope of supply ... 16
Intended use ... 16
Thermal concept ... 17
Fronius Solar.web ... 17
Local communication ... 18
The various operating modes ... 19
Operating modes – Explanation of symbols ... 19
Operating mode – Inverter with battery ... 20
Operating mode – Inverter with battery and several Smart Meters ... 20
Operating mode - inverter with battery, AC-coupled to another inverter ... 20
Operating mode – Inverter with battery and backup power function ... 21
Operating mode – Inverter with battery, Ohmpilot and backup power function ... 21
Operating mode – Inverter with battery, further inverter and backup power function ... 21
Energy flow direction of the inverter ... 22
Operating states (only for systems with a battery) ... 22
Energy saving mode ... 24
General ... 24
Switch-off conditions ... 24
Switch-on conditions ... 24
Special case ... 24
Indication of energy saving mode ... 25
Suitable batteries ... 26
General ... 26
Limitations in operation ... 26
BYD Battery-Box Premium ... 26
LG FLEX ... 27
Manual system start ... 29
Requirements ... 29
Notification of system shutdown ... 29
Manual battery start after system shutdown ... 29
Starting backup power operation after a system shutdown ... 29
Protection of people and equipment ... 30
Central grid and system protection ... 30
WSD (wired shutdown) ... 30
RCMU ... 30
Insulation monitoring ... 30
AFCI - Arc Fault Circuit Interrupter (Arc Guard) ... 30
Safe state ... 31
Surge protective device ... 31
Control elements and connections ... 32

Connection area 32
Connection area divider 33
Ground electrode terminal 33
DC disconnector 34
Data communication area 34
Button functions and LED status indicator 35
Internal schematic connection diagram of the IOs 37

Backup power variant - PV Point (OP) 39

General 41
Explanatory note - PV Point/PV Point Comfort 41
PV Point (OP) 41
PV Point Comfort 42

Backup power variant - Full Backup 43

General 45
Prerequisites for backup power mode 45
Transitioning from feeding energy into the grid to backup power mode 45
Transitioning from backup power mode to feeding energy into the grid 45
Backup power and energy saving mode 46
Automatic switch to backup power including backup power circuits and 1-pin separation, e.g. Austria or Australia 47
Functions 47
Transitioning from feeding energy into the grid to backup power mode 47
Transitioning from backup power mode to feeding energy into the grid 47
Automatic switch to backup power all-pin separation, e.g. Germany, France, UK, Spain 48
Functions 48
Transitioning from feeding energy into the grid to backup power mode 48
Transitioning from backup power mode to feeding energy into the grid 49
Automatic switch to backup power all-pin separation, Italy 50
Functions 50
Transitioning from feeding energy into the grid to backup power mode 50
Transitioning from backup power mode to feeding energy into the grid 51
Manual switch to backup power 1-pin separation, e.g. Australia / 2-pin separation, e.g. Germany 52
Functions 52
Transitioning from feeding energy into the grid to backup power mode 52
Transitioning from backup power mode to feeding energy into the grid 53

Installation 55

General 57
Quick-lock system 57
Warning notices on the device 57
System component compatibility 59
Installation location and position 60
Choosing the location of the inverter 60
Choosing the location of third-party batteries 61
Installation position of inverter 62
Install the mounting bracket and hang up the inverter 64
Selecting the fixing material 64
Properties of the mounting bracket 64
Do not deform the mounting bracket 64
Fitting the mounting bracket to a wall 64
Installing the mounting bracket on a mast or beam 65
Attaching the mounting bracket to mounting rails 66
Attaching the inverter to the mounting bracket 66
Prerequisites for connecting the inverter 67
Different cable types 67
Permissible cables for the electrical connection 67
Permissible cables for the data communication connection 68
Cable diameter of the AC cable 69

Cable diameter of the DC cable ... 69
Maximum alternating current fuse protection ... 69
Connecting the inverter to the public grid (AC side) ... 71
Safety ... 71
Connecting the inverter to the public grid (AC side) ... 71
Connecting solar module strings to the inverter ... 74
General comments regarding PV modules ... 74
Safety ... 74
Module array - general information ... 75
Module array configuration 8 - 10 kW ... 75
Connecting the solar module strings to the inverter ... 76
Connecting the battery to the inverter ... 80
Safety ... 80
Connecting the battery on the DC side ... 80
Connecting the LG FLEX ground conductor ... 84
Connecting backup power - PV Point (OP) ... 85
Safety ... 85
Installation ... 85
Testing backup power mode ... 89
Connecting backup power - Full Backup ... 90
Safety ... 90
Automatic switch to backup power 1-pin separation, e.g. Austria or Australia ... 90
Automatic switch to backup power 2-pin separation, e.g. Germany, France, UK, Spain ... 91
Automatic switch to backup power 2-pin double separation with ext. grid and system protection - e.g. Italy ... 92
Manual switch to backup power 1-pin separation, e.g. Australia / 2-pin separation, e.g. Germany ... 92
Testing backup power mode ... 94
Connecting the data communication cable ... 95
Modbus participants ... 95
Routing data communication cables ... 96
Connecting the battery communication cable ... 98
Terminating resistors ... 98
Installing the WSD (wired shutdown) ... 100
Closing and commissioning the inverter ... 101
Closing the inverter's connection area/housing cover, and commissioning ... 101
Starting the inverter for the first time ... 101
Installation with the app ... 102
Installation using the web browser ... 102
Switching off current supply and restarting the inverter ... 104
De-energising the inverter and switching it on again ... 104

Settings - user interface of the inverter **105**

User settings ... 107
User login ... 107
Selecting the language ... 107
Device configuration ... 108
Components ... 108
Functions andI/Os ... 109
Demand Response Modes (DRM) ... 110
Inverter ... 110
Energy management ... 113
Maximum permitted battery charging from the public grid ... 113
Energy management ... 113
Examples - Time-dependent battery control ... 114
Allowed battery control rules ... 116
PV power reduction ... 118
Load management ... 118
System ... 120
General ... 120
Update ... 120

Setup wizard ... 120
Restoring the factory settings ... 120
Event Log ... 120
Information ... 120
License Manager ... 121
Support ... 122
Communication ... 123
Network ... 123
Modbus ... 124
Remote control ... 126
Fronius Solar API ... 126
Internet Services ... 126
Safety and grid requirements ... 127
Country setup ... 127
Requesting inverter codes in Solar.SOS ... 127
Feed-in limitation ... 128
Dynamic power regulation with several inverters ... 129
I/O power management ... 132
Connection diagram - 4 relay ... 133
I/O power management settings - 4 relays ... 134
Connection diagram - 3 relay ... 135
I/O power management settings - 3 relays ... 136
Connection diagram - 2 relay ... 137
I/O power management settings - 2 relays ... 138
Connection diagram - 1 relay ... 139
I/O power management settings - 1 relay ... 140
Connecting a ripple control receiver to multiple inverters ... 140
Autotest (CEI 0-21) ... 141

Options **143**

Surge protective device (SPD) ... 145
General ... 145
Safety ... 145
Scope of supply ... 145
De-energising the inverter ... 146
Installation ... 147
Commissioning the inverter ... 152
DC Connector Kit GEN24 ... 154
General ... 154
General comments regarding PV modules ... 154
Safety ... 154
Scope of supply ... 155
De-energising the inverter ... 155
Installation ... 156
Commissioning the inverter ... 160
PV Point Comfort ... 161
Safety ... 161
Scope of supply ... 161
De-energising the inverter ... 162
Installation ... 163
Commissioning the inverter ... 169
Configuring PV Point Comfort ... 169
Testing backup power mode ... 170

Appendix **171**

Care, maintenance and disposal ... 173
General ... 173
Cleaning ... 173
Maintenance ... 173
Safety ... 173
Operation in dusty environments ... 173

Disposal ... 174
Guarantee provisions ... 176
Fronius manufacturer's warranty ... 176
Components for switching to backup power ... 177
Components for automatic Full Backup backup power changeover ... 177
Components for manual Full Backup backup power changeover ... 178
Status codes and remedy ... 180
Display ... 180
Status Codes ... 180
Technical data ... 182
Fronius Primo GEN24 8.0 / 8.0 Plus ... 182
Fronius Primo GEN24 10.0 / 10.0 Plus ... 185
WLAN ... 189
Technical data of surge protective device DC SPD type 1+2 GEN24 ... 189
Explanation of footnotes ... 190
Integrated DC disconnector ... 190

Circuit diagrams **193**

Fronius Primo GEN24 and BYD Battery-Box Premium HV ... 195
Circuit Diagram ... 195
Fronius Primo GEN24 with two BYD Battery-Box Premium HV connected in parallel ... 196
Circuit Diagram ... 196
Fronius Primo GEN24 with three BYD Battery-Box Premium HV connected in parallel ... 197
Circuit Diagram ... 197
Fronius Primo GEN24 and LG FLEX ... 198
Circuit Diagram ... 198
Circuit Diagram - PV Point (OP) ... 199
Circuit Diagram ... 199
Circuit Diagram - PV Point (OP) Australia ... 200
Circuit Diagram ... 200
Backup power terminal - PV Point (OP) with battery only for France ... 201
Circuit Diagram ... 201
Backup power terminal - PV Point (OP) manual changeover ... 202
Circuit Diagram ... 202
PV Point Comfort ... 203
Circuit Diagram ... 203
Automatic switch to backup power 1-pin single separation - e.g. Austria ... 204
Circuit Diagram ... 204
Automatic switch to backup power 1-pin single separation - e.g. Australia ... 205
Circuit Diagram ... 205
Automatic switch to backup power 2-pin single separation - e.g. Germany ... 206
Circuit Diagram ... 206
Automatic switch to backup power 2-pin single separation - e.g. France ... 207
Circuit Diagram ... 207
Automatic switch to backup power 2-pin single separation - e.g. UK ... 208
Circuit Diagram ... 208
Automatic switch to backup power 2-pin single separation - e.g. Spain ... 209
Circuit Diagram ... 209
Automatic switch to backup power 2-pin double separation with ext. grid and system protection - e.g. Italy ... 210
Circuit Diagram ... 210
Fronius Primo GEN24 with Enwitec Box ... 211
Circuit Diagram ... 211
Manual switch to backup power 1-pin separation, e.g. Australia ... 212
Circuit Diagram ... 212
Manual switch to backup power 2-pin separation, e.g. Germany ... 213
Circuit Diagram ... 213
Surge protective device (SPD) ... 214
Circuit Diagram ... 214

Dimensions of the inverter **215**

Fronius Primo GEN24 8 - 10 kW ... 217

Fronius Primo GEN24 8 - 10 kW 217

Safety rules

Explanation of safety notices

⚠ WARNING!

Indicates a potentially hazardous situation.

▶ Death or serious injury may result if appropriate precautions are not taken.

⚠ CAUTION!

Indicates a situation where damage could occur.

▶ If not avoided, minor injury and/or damage to property may result.

NOTE!

Indicates a risk of flawed results and possible damage to the equipment.

If you see any of the symbols depicted in the "Safety rules" chapter, special care is required.

Safety

⚠ CAUTION!

Danger from crushing due to the incorrect handling of attachments and connection parts.

Injuries to limbs may result.

▶ When lifting up, putting down and attaching the inverter, use the integrated grips.

▶ When fitting attachments, ensure that no limbs are located between the attachment and the inverter.

▶ Do not hold onto the individual poles on the terminals when locking and unlocking.

General

The device has been manufactured in line with the state of the art and according to recognised safety standards. In the event of incorrect operation or misuse, there is a risk of:

- Serious or fatal injury to the operator or third parties
- Damage to the device and other material assets belonging to the operating company

All personnel involved in commissioning, maintenance and servicing of the device must:

- Be suitably qualified
- Have knowledge of and experience in dealing with electrical installations
- Read and follow these Operating Instructions carefully

In addition to the Operating Instructions, all applicable local rules and regulations regarding accident prevention and environmental protection must also be followed.

All safety and danger notices on the device:
- Must be kept in a legible state
- Must not be damaged
- Must not be removed
- Must not be covered, pasted or painted over

Only operate the device when all protection devices are fully functional. If the protection devices are not fully functional, there is a risk of:
- Serious or fatal injury to the operator or third parties
- Damage to the device and other material assets belonging to the operating company

Any safety devices that are not fully functional must be repaired by an authorized specialist before the device is switched on.

Never bypass or disable protection devices.

For the location of the safety and danger notices on the device, refer to the chapter headed "Warning notices on the device" in the Operating Instructions for your device.

Faults that could compromise safety must be remedied before switching on the device.

Environmental conditions

Operation or storage of the device outside the stipulated area will be deemed as not in accordance with the intended purpose. The manufacturer accepts no liability for any damage resulting from improper use.

Qualified personnel

The servicing information contained in these operating instructions is intended only for the use of qualified service engineers. An electric shock can be fatal. Do not carry out any actions other than those described in the documentation. This also applies to qualified personnel.

All cables and leads must be secured, undamaged, insulated and adequately dimensioned. Loose connections, scorched, damaged or inadequately dimensioned cables and leads must be immediately repaired by authorised personnel.

Maintenance and repair work must only be carried out by an authorised specialist.

It is impossible to guarantee that bought-in parts are designed and manufactured to meet the demands made on them, or that they satisfy safety requirements. Use only original spare parts (also applies to standard parts).

Do not carry out any alterations, installations, or modifications to the device without first obtaining the manufacturer's permission.

Components that are not in perfect condition must be changed immediately.

Noise emission values

The sound power level of the inverter is specified in the **Technical data**.

The device is cooled as quietly as possible with the aid of an electronic temperature control system; this depends on the amount of converted power, the ambient temperature, the level of soiling of the device, etc.

It is not possible to provide a workplace-related emission value for this device because the actual sound pressure level is heavily influenced by the installation

situation, the grid quality, the surrounding walls and the properties of the room in general.

EMC measures

In certain cases, even though a device complies with the standard limit values for emissions, it may affect the application area for which it was designed (e.g., when there is equipment that is susceptible to interference at the same location, or if the site where the device is installed is close to either radio or television receivers). If this is the case, then the operator is obliged to take action to rectify the situation.

Backup power

This system has backup power functions, which enable a replacement power supply to be established in the event of a failure of the public grid.

Where an automatic backup power supply is installed, a **backup power warning notice** (https://www.fronius.com/en/search-page, item number: 42,0409,0275) must be fitted on the electrical distributor.

Maintenance and installation work in the home network requires both disconnection on the utility side and deactivation of the replacement power mode by opening the integrated DC disconnector on the inverter.

The function of the residual current devices for the backup power supply must be checked at regular intervals (according to the manufacturer's instructions), but at least twice a year.
A description on how to perform the test operation can be found in the **backup power checklist** (https://www.fronius.com/en/search-page, item number: 42,0426,0365).

Depending on the insolation conditions and the battery state of charge, the backup power supply is automatically deactivated and activated. This can cause the backup power supply to unexpectedly return from standby mode. Therefore, installation work can only be performed on the home network when the backup power supply is deactivated.

Influencing factors on the total power in backup power mode:

Reactive power
Electrical loads with a power factor not equal to 1 also require reactive power in addition to effective power. The reactive power also loads the inverter. Therefore, to correctly calculate the actual total power, it is not the rated power of the load that is relevant, but the current caused by effective and reactive power.

Devices with a high reactive power are mainly electric motors such as:
- Water pumps
- Circular saws
- Blowers and fans

High starting current
Electrical loads that need to accelerate a large mass usually require a high starting current. This can be up to 10 times higher than the nominal current. The maximum current of the inverter is available for the starting current. Loads with too high starting currents therefore cannot be started/operated, even though the nominal power of the inverter suggests that they can. When dimensioning of the backup power circuit, the connected load power and any starting current must also be taken into account.

Devices with high starting currents are, for example:

- Devices with electric motors (e.g. lifting platform, circular saws, planing bench)
- Devices with large transmission ratio and flywheel mass
- Devices with compressors (e.g. compressed air compressors, air conditioning systems)

IMPORTANT!
Very high starting currents can cause short-term distortion or a drop in output voltage. The simultaneous operation of electronic devices in the same backup power supply system should be avoided.

IMPORTANT!
The inverter may only be operated within the limits of its technical capabilities. Operation outside of its technical capabilities can cause the inverter to shut down.

Data protection

The user is responsible for the safekeeping of any changes made to the factory settings. The manufacturer accepts no liability for any deleted personal settings.

Copyright

Copyright of these operating instructions remains with the manufacturer.

The text and illustrations are all technically correct at the time of printing. We reserve the right to make changes. The contents of the operating instructions shall not provide the basis for any claims whatsoever on the part of the purchaser. If you have any suggestions for improvement, or can point out any mistakes that you have found in the instructions, we will be most grateful for your comments.

Protective earthing (PE)

Connection of a point in the device, system or installation to earth to protect against electric shock in the event of a fault. When installing a safety class 1 inverter (see **Technical data**), the ground conductor connection is required.

When connecting the ground conductor, ensure that it is secured against accidental disconnection. All the points listed in **Connecting the inverter to the public grid (AC side)** on page **71** must be observed. When using cable glands, ensure that the ground conductor will be strained last in the event of failure of the cable gland. When connecting the ground conductor, the minimum cross-section requirements specified by the respective national standards and guidelines must be observed.

General information

Fronius Primo GEN24

Device concept

The inverter transforms the direct current generated by the solar modules into alternating current. This alternating current is fed into the public grid and synchronized with the grid voltage in use. Moreover, the solar energy can also be stored in a connected battery for later use.

The inverter is intended for use in grid-connected photovoltaic systems. The inverter has backup power functions and switches to backup power mode if it has been wired accordingly*.

The inverter automatically monitors the public grid. Whenever conditions in the electric grid are inconsistent with standard conditions (for example, grid switch-off, interruption), the inverter will immediately stop producing power and interrupt the supply of power into the grid.
The grid is monitored by monitoring the voltage, frequency and islanding conditions.

After installation and commissioning, the inverter's operation is fully automatic; the inverter draws the maximum possible power from the PV modules.
Depending on the operating point, this power is used in the home, stored in a battery* or fed into the grid.

As soon as the energy provided by the PV modules is no longer sufficient, the power from the battery is fed into the home. Depending on the setting, power may also be obtained from the public grid in order to charge the battery*.

When its temperature gets too high, the inverter automatically reduces the output or charging power, or switches off completely, in order to protect itself.
Reasons for the temperature being too high include a high ambient temperature or insufficient heat dissipation (for example, inadequate heat dissipation when installed in switch cabinets).

* Depending on the device variant, suitable battery, appropriate wiring, settings and local standards and guidelines.

Function overview

Function	Primo GEN24	Primo GEN24 Plus
Backup power variant - PV Point (OP)	✓	✓
Battery connection*	Available as an option**	✓
Backup power variant - Full Backup	Available as an option**	✓

* For suitable batteries, see chapter **Suitable batteries**.

** The functions are optionally available via Fronius UP (see chapter **Fronius UP**).

Fronius UP

With Fronius UP*, the inverter can be expanded by the authorised specialist to include optionally available functions (see chapter **Function overview**).

* The availability of Fronius UP varies from country to country. For more information on Fronius UP and availability, see **Installation guide: Fronius GEN24 & GEN24 Plus.**

Scope of supply

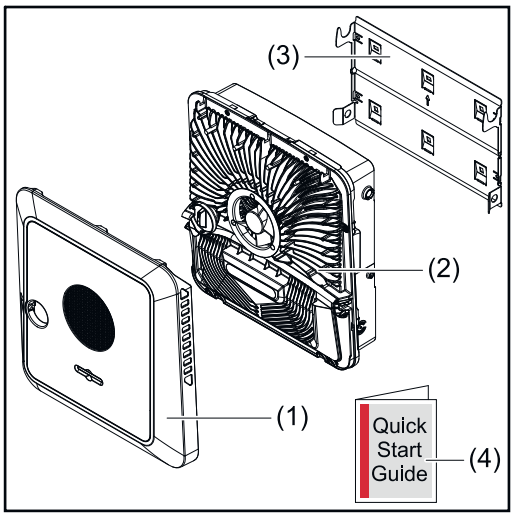

(1) Housing cover
(2) Inverter
(3) Mounting bracket (illustration)
(4) Quick Start guide

Intended use

The inverter is designed to convert direct current from PV modules into alternating current and feed this power into the public grid. A backup power mode* is possible provided that appropriate cabling has been installed.

The following are considered improper use:
- Utilisation for any other purpose, or in any other manner
- Alterations to the inverter are not permitted unless expressly recommended by Fronius
- Installation of components is not permitted unless expressly recommended or sold by Fronius

The manufacturer is not responsible for any damage resulting from improper use. All warranty claims are considered void in such cases.

Intended use also means:
- Carefully reading and obeying all the instructions, as well as safety and danger notices in the Operating Instructions
- Installation in accordance with chapter "**Installation**" from page **55**.

When designing the photovoltaic system, ensure that all components of the photovoltaic system are operated exclusively within their permissible operating range.

Take into account the grid operator's regulations for energy fed into the grid and connection methods.

The Fronius GEN24 inverter is a grid-connected inverter with a backup power function – it is not a stand-alone inverter. The following restrictions must therefore be observed in backup power mode:

- Backup power mode may be in operation for at max. 2000 hours
- Backup power mode may be in operation for more than 2000 operating hours if 20% of the duration of the inverter's grid power feed operation is not exceeded at the relevant time.

* Depending on the device variant, suitable battery, appropriate wiring, settings, and local standards and guidelines.

Thermal concept

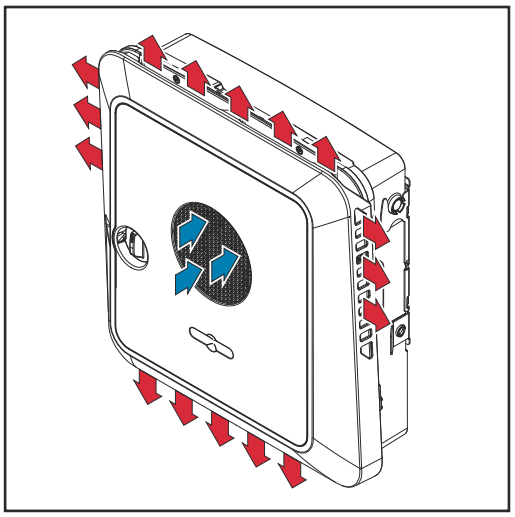

Ambient air is drawn in by the fan on the front side and blown out at the device sides. The even heat dissipation allows several inverters to be installed next to each other.

NOTE!

Risk due to insufficient cooling of the inverter.
This may result in a loss of power in the inverter.

- ▶ Do not block the fan (for example, with objects that protrude through the touch guard).
- ▶ Do not cover the ventilation slots, even partially.
- ▶ Make sure that the ambient air can always flow through the inverter's ventilation slots unimpeded.

Fronius Solar.web

With Fronius Solar.web or Fronius Solar.web Premium, the PV system can be easily monitored and analysed by the system owner and installer. If configured accordingly, the inverter transmits data such as power, yields, load, and energy balance to Fronius Solar.web. For more information see **Solar.web - monitoring & analysis**.

Configuration is carried out via the setup wizard, see chapter **Installation with the app** on page **102** or **Installation using the web browser** on page **102**.

Prerequisites for configuration:

- Internet connection (download: min. 512 kBit/s, upload: min. 256 kBit/s)*.
- User account on **solarweb.com**.
- Completed configuration via the setup wizard.

* The information given does not constitute an absolute guarantee of faultless function. High error rates in the transmission, reception fluctuations or transmission drop-outs can have a negative effect on the data transfer.

Fronius recommends testing the Internet connection on site according to the minimum requirements.

Local communication

The inverter can be found via the Multicast DNS protocol (mDNS). It is recommended to search for the inverter by the assigned host name.

The following data can be retrieved via mDNS:
- NominalPower
- Systemname
- DeviceSerialNumber
- SoftwareBundleVersion

The various operating modes

Operating modes – Explanation of symbols



PV module
generates direct current



Fronius GEN24 inverter
converts direct current into alternating current and charges the battery (a battery support is required to charge the battery, see **Function overview** on page **15**). The integrated system monitoring enables the inverter to be integrated into a network by means of WLAN.



Additional inverter in the system
converts the direct current into alternating current. However, it cannot charge a battery, and is not available in backup power mode.



Battery
is coupled to the inverter on the direct current side, and stores electrical energy.



Fronius Ohmpilot
to use excess energy to heat water.



Primary meter
records the system's load curve and provides measurement data for energy profiling in Fronius Solar.web. The primary meter also controls the dynamic feed-in control.



Secondary meter
records the load curve of individual loads (e.g. washing machine, lamps, TV, heat pump, etc.) in the consumption branch and provides measurement data for energy profiling in Fronius Solar.web.

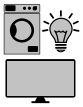

Loads in the system
are the loads connected in the system.



Additional loads and producers in the system
are connected to the system by means of a Smart Meter.



PV Point
is a non-uninterruptible 1-phase backup power circuit that supplies electrical devices with up to 3 kW if sufficient power is available from the PV modules or the battery.



Full Backup
the inverter is prepared for backup power mode. The backup power mode must be implemented in the switch cabinet by the electrician performing the installation. The PV system operates in a stand-alone manner in backup power mode.

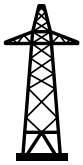

Grid
supplies the loads in the system if insufficient power is being generated by the PV modules or supplied by the battery.

Operating mode – Inverter with battery

In order to be able to obtain the highest rate of self-consumption with your PV system, a battery can be used to store excess energy. The battery is coupled to the inverter on the direct current side. Multiple current conversion is therefore not required, and the efficiency is increased.

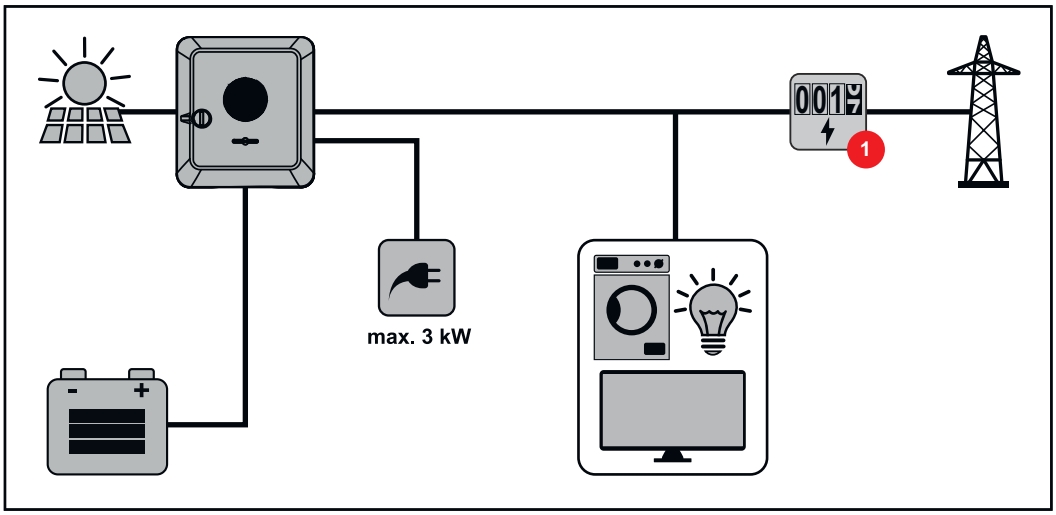

Operating mode – Inverter with battery and several Smart Meters

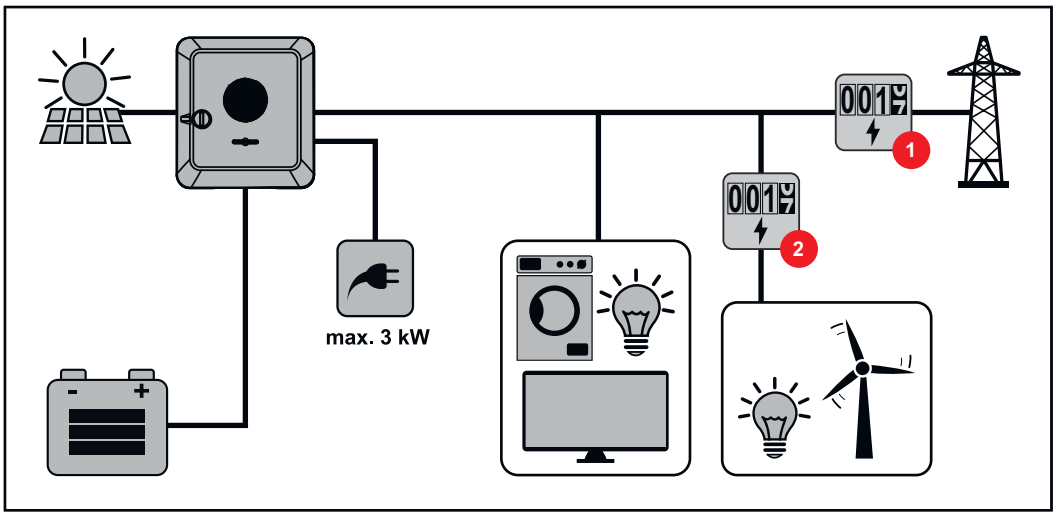

Operating mode - inverter with battery, AC-coupled to another inverter

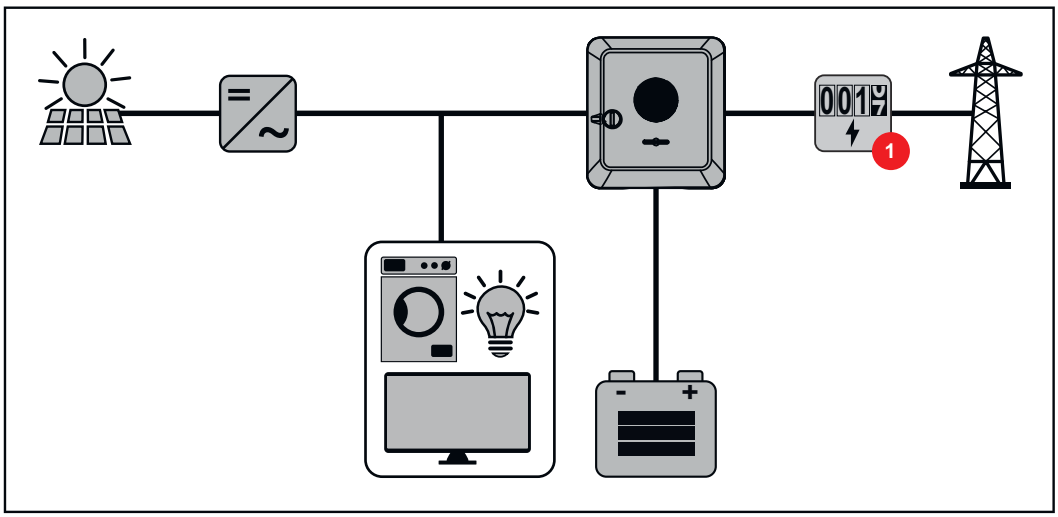

Operating mode – Inverter with battery and backup power function

IMPORTANT!
In backup power mode, an increased nominal frequency is used in order to prevent undesired parallel operation with other power generators.

In the fully equipped hybrid PV system, the inverter can:
- Supply loads in the house
- Store excess energy in the battery and/or feed it into the grid
- Supply connected loads in the event of a power failure

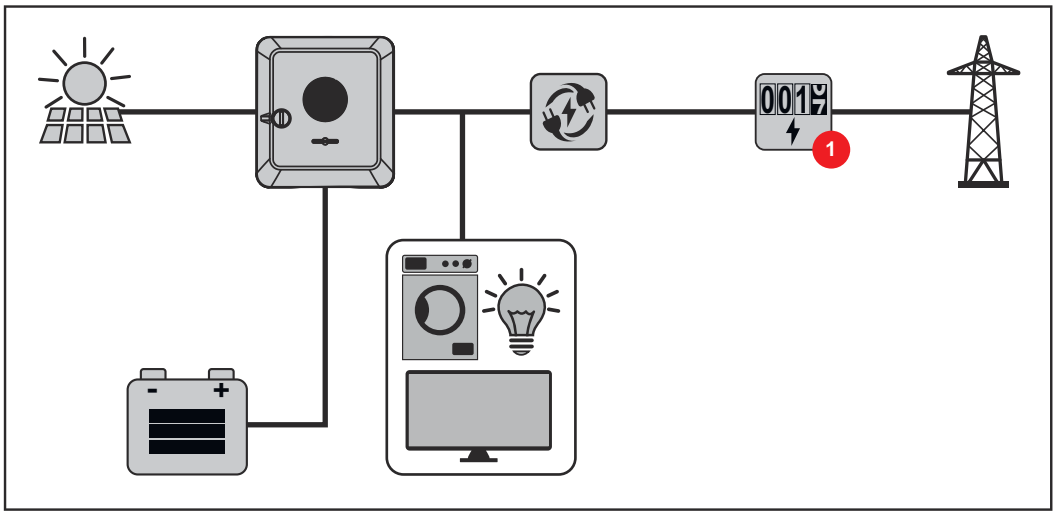

Operating mode – Inverter with battery, Ohmpilot and backup power function

IMPORTANT!
In the fully equipped hybrid PV system with a Fronius Ohmpilot, the Ohmpilot cannot be operated in the event of a power failure for regulatory reasons. It is therefore sensible to install the Ohmpilot outside of the backup power branch.

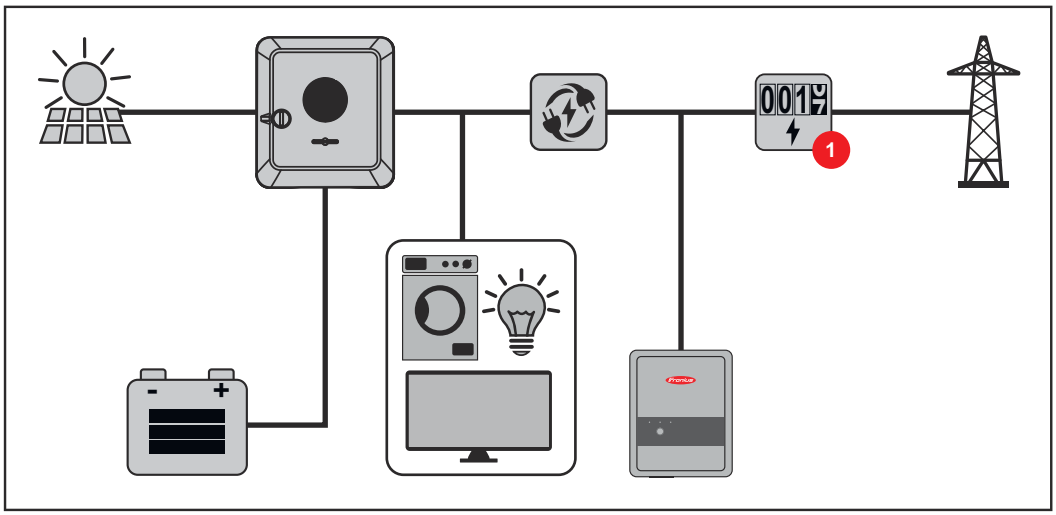

Operating mode – Inverter with battery, further inverter and backup power function

In the hybrid photovoltaic system, batteries must only be connected to one inverter with battery support. Batteries cannot be split between multiple inverters with battery support. However, depending on the battery manufacturer, several batteries can be combined on one inverter.

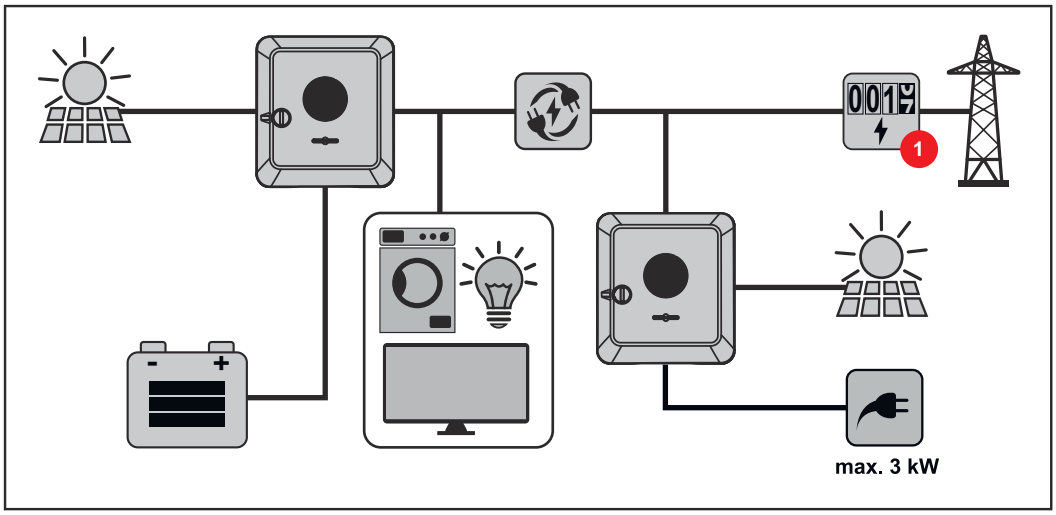

Energy flow direction of the inverter

In the case of hybrid inverters, there are four different energy flow directions:

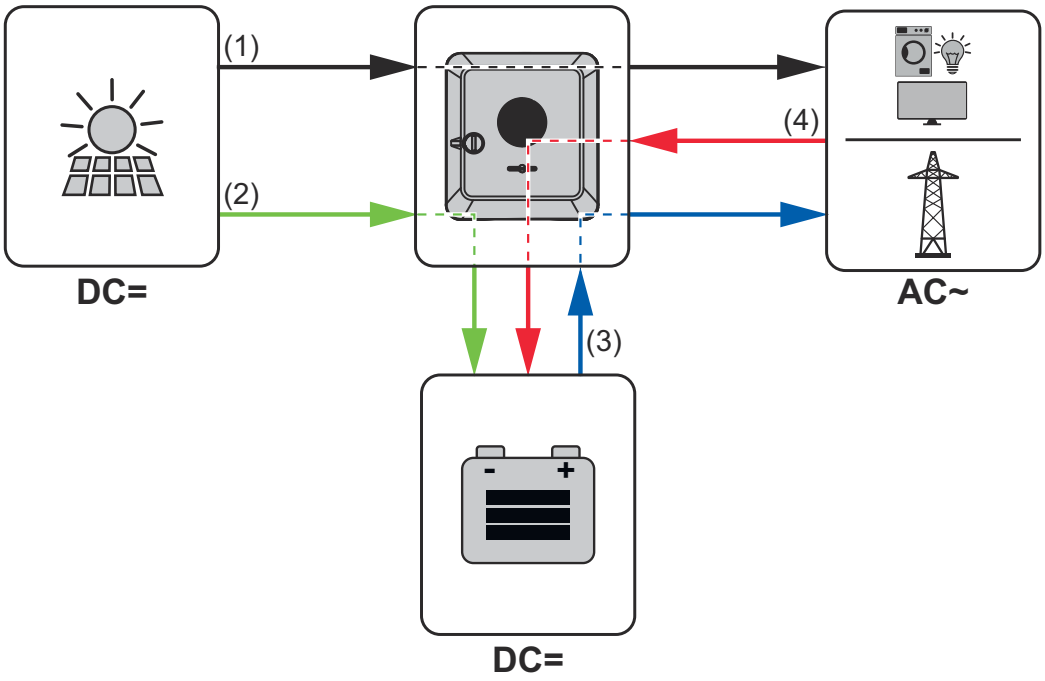

(1) PV module – inverter – load/grid
(2) PV module – inverter – battery*
(3) Battery – inverter – load/grid*
(4) Grid – inverter – battery*

* depending on the settings and local standards and regulations.

Operating states (only for systems with a battery)

Battery systems distinguish different operating states. In this case, the relevant current operating state is displayed on the user interface of the inverter or in Solar.web.

Operating state	Description
Normal operation	Energy is stored or drawn, as required.

Operating state	Description
Min. state of charge (SOC) achieved	Battery has reached the minimum SOC set or specified by the manufacturer. The battery cannot be discharged any further.
Energy saving mode (standby)	The system has been put into energy saving mode. Energy saving mode is automatically ended as soon as sufficient excess energy is available again.
Start	The storage system starts from energy saving mode (standby).
Forced re-charging	The inverter re-charges the battery, in order to maintain the set minimum SOC (state of charge) or the SOC specified by the manufacturer (protection against deep discharge).
Deactivated	The battery is not active. It has either been deactivated/switched off, or an error means that no communication with the battery is possible.

Energy saving mode

General

Energy saving mode (standby mode) is used to reduce the self-consumption of the system. Both the inverter and the battery automatically switch to energy saving mode under certain conditions.

The inverter switches to energy saving mode if the battery is flat and no PV power is available. Only the inverter's communication with the Fronius Smart Meter and Fronius Solar.web is maintained.

Switch-off conditions

If all the switch-off conditions are met, the battery switches into energy saving mode within ten minutes. This time delay ensures that the inverter can at least be restarted.

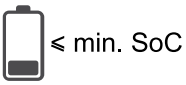

The battery state of charge is less than or equal to the input minimum state of charge.



The current charging or discharging power of the battery is less than 100 W.



Less than 50 W is available for charging the battery. The power of feeding into the public grid is at least 50 W less than the power currently required in the home network.

The inverter automatically switches into energy saving mode, following the battery.

Switch-on conditions

If one of the following conditions is met for at least 30 seconds, energy saving mode is ended:

- Energy saving mode is no longer permissible owing to a changed setting on the user interface of the inverter.
- If dynamic power reduction of 0 is set, or if the system is operating in backup power mode, the power of feeding into the public grid is always less than the required power in the home network.
  There is a separate condition for this case (dynamic power reduction < 300 W or active backup power mode):
  - If the PV power is above a specified threshold, energy saving mode is ended.
- Battery charging from the public grid is requested via the user interface of the inverter.
- The battery is being recharged in order to restore the minimum state of charge or perform calibration.

Special case

If the inverter does not operate for 12 minutes (e.g. fault), or there is an interruption in the electrical connection between the inverter and the battery and there is no backup power mode, the battery switches to energy-saving mode in any case. This reduces self discharge of the battery.

Indication of energy saving mode

During energy saving mode:

- Operating LED for the inverter lights up orange (see **Button functions and LED status indicator** on page **35**).
- The user interface of the inverter can be reached.
- All the available data is saved and transmitted to Solar.web.
- The real-time data can be seen on Solar.web.

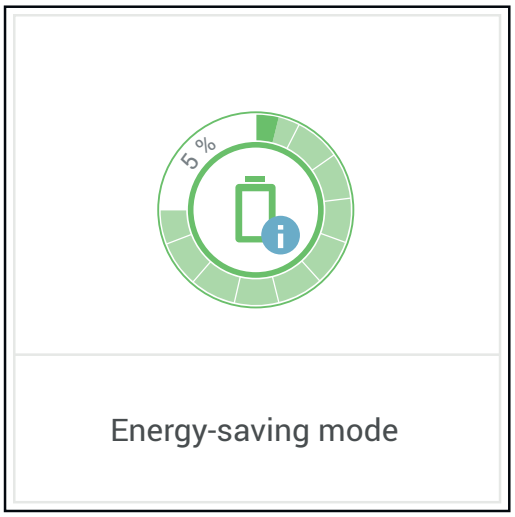

Energy saving mode is shown on the user interface of the inverter and in Solar.web by an "i" beside the battery symbol in the system overview.

Suitable batteries

General

Fronius explicitly points out that the third-party batteries are not Fronius products. Fronius is not the manufacturer, distributor or retailer of these batteries. Fronius accepts no liability and offers no service or guarantees for these batteries.

Obsolete firmware/software states may lead to incompatibilities between the inverter and the battery. In this case, the following steps are to be performed:

1 Update battery software – see the battery documentation.

2 Update inverter firmware – see **Update** on page **120**.

Read this document and the Installation Instructions before installing and commissioning the external battery. The documentation is either enclosed with the external battery or can be obtained from the battery manufacturer or their service partners

All documents associated with the inverter can be found at the following address:

https://www.fronius.com/en/solar-energy/installers-partners/service-support/tech-support

Limitations in operation

If the DC voltage exceeds 520 V, the battery can no longer be charged or discharged. The voltage of 520 V is rarely exceeded during normal operation of the inverter.

When the output power of the inverter is reduced, the operating point shifts towards higher DC voltages. The following conditions during normal operation can lead to the DC voltage of 520 V being exceeded:

- Overdimensioning of the PV generator.
- Feed-in limitation (e.g. zero feed-in).
- Specifications of the grid operator (e.g. mains voltage-dependent power reduction).
- Backup power mode. If the 520 V voltage is exceeded during backup power, backup power operation may be restricted. Therefore, an open circuit voltage of max. 520 V is recommended.

BYD Battery-Box Premium

BYD Battery-Box Premium HVS	5.1	7.7	10.2	12.8
Number of battery modules	2	3	4	5
Fronius Primo GEN24 *	✓	✓	✗	✗
Fronius Primo GEN24 Plus	✓	✓	✗	✗
Battery parallel operation**	✓	✓	✗	✗

BYD Battery-Box Premium HVM	8.3	11.0	13.8	16.6	19.3	22.1
Number of battery modules	3	4	5	6	7	8

BYD Battery-Box Premium HVM	8.3	11.0	13.8	16.6	19.3	22.1
Fronius Primo GEN24 *	✗	✓	✓	✓	✓	✗
Fronius Primo GEN24 Plus	✗	✓	✓	✓	✓	✗
Battery parallel operation**	✗	✓	✓	✓	✓	✗

* Battery support optionally available.

** Max. 3 batteries with the same capacity can be combined.

IMPORTANT!
According to the manufacturer's specifications, the max. DC cable length is 20 m. More detailed information can be found in the manufacturer's documents.

IMPORTANT!
To ensure reliable operation with a BYD Battery-Box Premium, the following switch-on sequence for the system must always be observed.

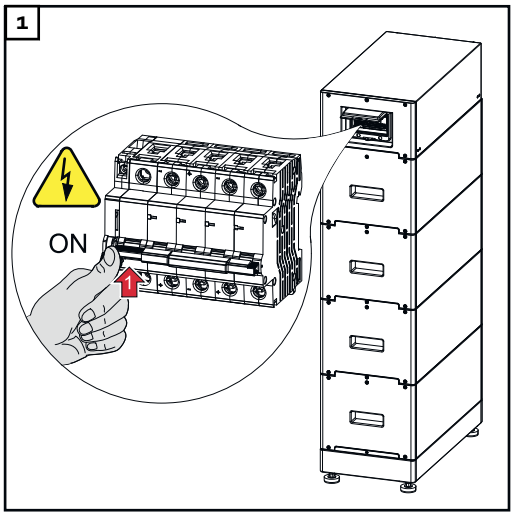

Switch on the battery.

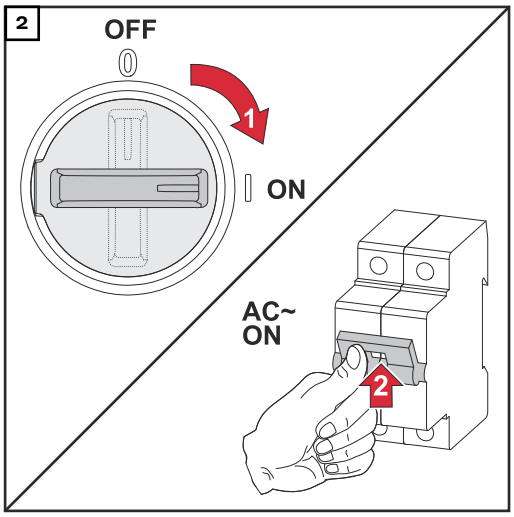

Set the DC disconnector to the "On" switch position. Switch on the automatic circuit breaker.

LG FLEX

LG FLEX	8.6	12.9	17.2
Number of battery modules	2	3	4

LG FLEX	8.6	12.9	17.2
Fronius Primo GEN24 *	✓	✓	✗
Fronius Primo GEN24 Plus	✓	✓	✗

* Battery support optionally available.

IMPORTANT!
According to the manufacturer's specifications, the max. DC cable length is 30 m. More detailed information can be found in the manufacturer's documents.

Switching on the battery

1

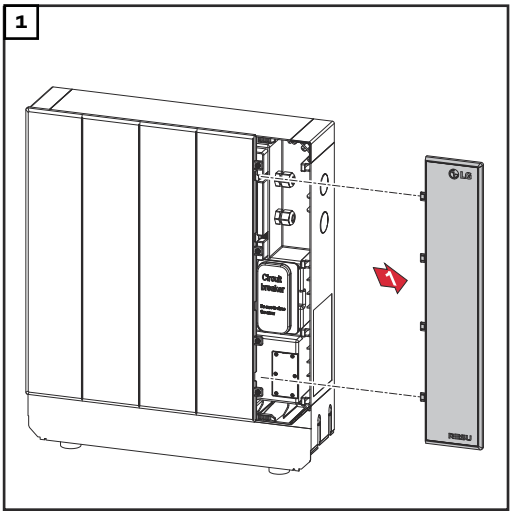

Pull off the cover to the right.

2

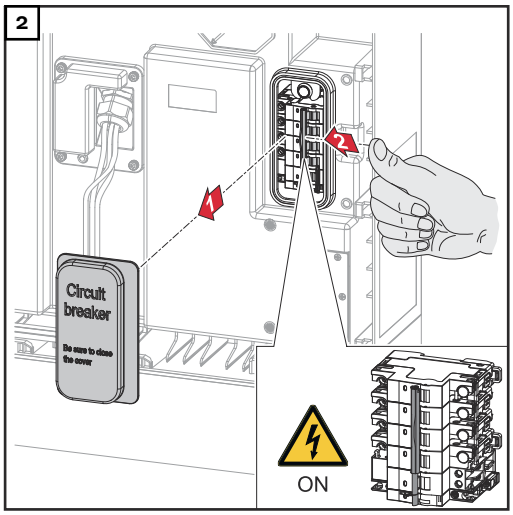

Pull off the cover of the DC disconnector to the front. Set the DC disconnector to the "On" switch position.

To refit the battery, follow the steps listed above in reverse order.

Manual system start

Requirements	There is no energy available from the PV modules or from the public grid. If backup power operation or battery operation are not possible (e.g. deep discharge protection of the battery), the inverter and battery switch off.
Notification of system shutdown	Status codes about the inactive state of the battery are displayed on the user interface of the inverter or sent via Solar.web by means of SMS or e-mail (only if notification via Solar.web is configured accordingly).
Manual battery start after system shutdown	As soon as energy is available again, the inverter starts operation automatically; however the battery must be started manually. The switch-on sequence must be observed for this, see chapter **Suitable batteries** on page **26**.
Starting backup power operation after a system shutdown	The inverter requires energy from the battery to start backup power operation. This is done manually on the battery; further information on the power supply for restarting the inverter via the battery can be found in the battery manufacturer's Operating Instructions.

Protection of people and equipment

Central grid and system protection

The inverter offers the option to use the integrated AC relays as coupling switches in conjunction with a central grid and system protection unit (in accordance with VDE-AR-N 4105:2018:11 §6.4.1). For this purpose, the central trigger device (switch) must be integrated into the WSD chain as described in the chapter "WSD (Wired Shut Down)".

WSD (wired shutdown)

The wired shutdown (WSD) interrupts the inverter feeding energy into the grid if the trigger device (switch, e.g. emergency stop or fire alarm switch) has been activated.

If an inverter (secondary device) fails, it is bypassed and the other inverters continue operating. If a second inverter (secondary device) or the inverter (primary device) fails, the operation of the entire WSD chain is interrupted.

For installation, see **Installing the WSD (wired shutdown)** on page **100**.

RCMU

The inverter is equipped with a universal current-sensitive residual current monitoring unit (RCMU = Residual Current Monitoring Unit) in accordance with IEC 62109-2 and IEC63112.
This device monitors residual currents from the PV module to the AC output of the inverter and disconnects the inverter from the grid in the event of unauthorised residual current.

Insulation monitoring

In the case of PV systems with ungrounded solar modules, the inverter checks the resistance between the positive or negative pole of the PV system and the ground potential before feeding energy into the grid. In the event of a short circuit between DC+ or DC- cable and ground (e.g. due to inadequately insulated DC cables or damaged solar modules), an infeed into the grid is prevented.

AFCI - Arc Fault Circuit Interrupter (Arc Guard)

AFCI (Arc Fault Circuit Interrupter) protects against arcing faults and in the narrower sense is a protection device against contact faults. The AFCI evaluates any DC-side faults that occur in the current and voltage curve with an electronic circuit and switches off the circuit when a contact fault is detected. This prevents overheating on poor contacts and ideally possible fires.

⚠ CAUTION!

Danger due to incorrect or unprofessional DC installation.
The result is risk of damage and in turn, risk of fire to the PV system due to inadmissible thermal loads that arise with an arc.

- ▶ Check plug connections are in good condition.
- ▶ Repair incorrect insulation as appropriate.
- ▶ Complete connections as per the specifications.

IMPORTANT!
Fronius will not accept any costs associated with production downtimes, installer

costs, etc., that may arise as the result of a detected arc and its consequences. Fronius accepts no liability for damage that can occur despite the presence of the integrated Arc Fault Circuit Interrupter/extinguishing system (e.g. caused by a parallel arc).

IMPORTANT!
Active PV module electronics (e.g., power optimiser) can impair the function of the Arc Fault Circuit Interrupter. Fronius does not guarantee that the Arc Fault Circuit Interrupter will work correctly in combination with active PV module electronics.

Reconnection behaviour
After detection of an arc, feeding energy into the grid is interrupted for at least 5 minutes. Depending on the configuration, feeding energy into the grid is then automatically resumed. If several arcs are detected within a period of 24 hours, feeding energy into the grid can also be permanently interrupted until a manual reconnection has taken place."

Safe state

If one of the following safety devices is triggered, the inverter switches to a safe state:
- WSD
- Isolation monitoring
- RCMU

In the safe state, the inverter no longer feeds energy in and is disconnected from the grid by opening the AC relays.

Surge protective device

The inverter is equipped with an integrated surge protective device on the DC and AC side in accordance with IEC 62109-2. The surge protective device protects the system against damage in the event of a surge.

Control elements and connections

Connection area

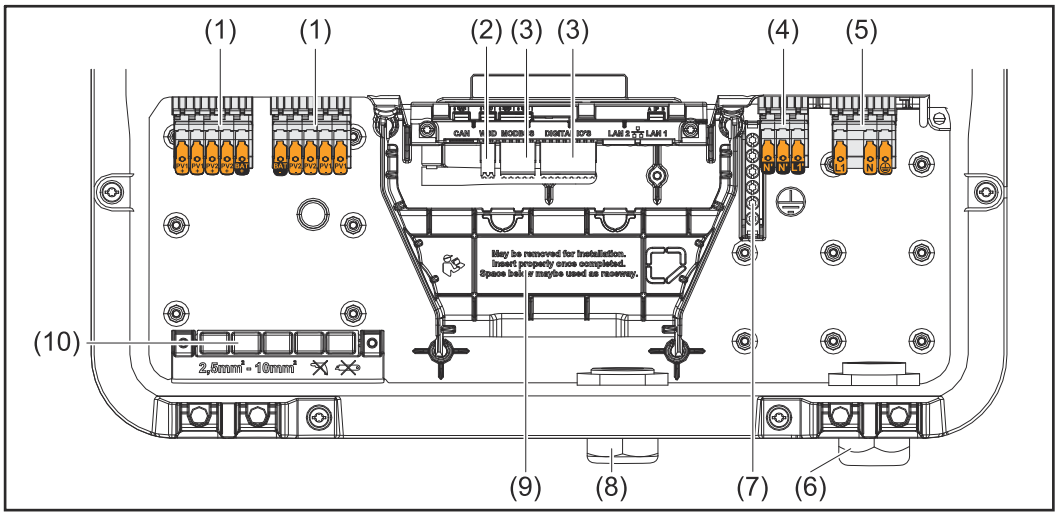

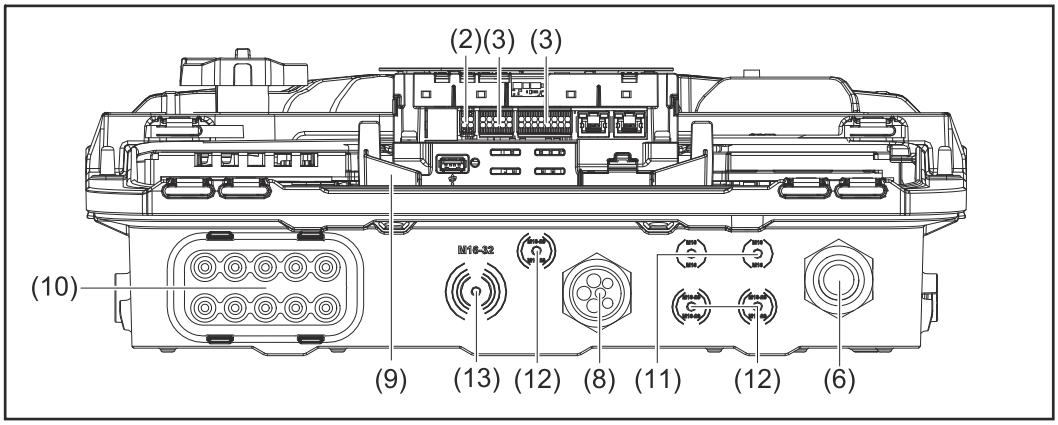

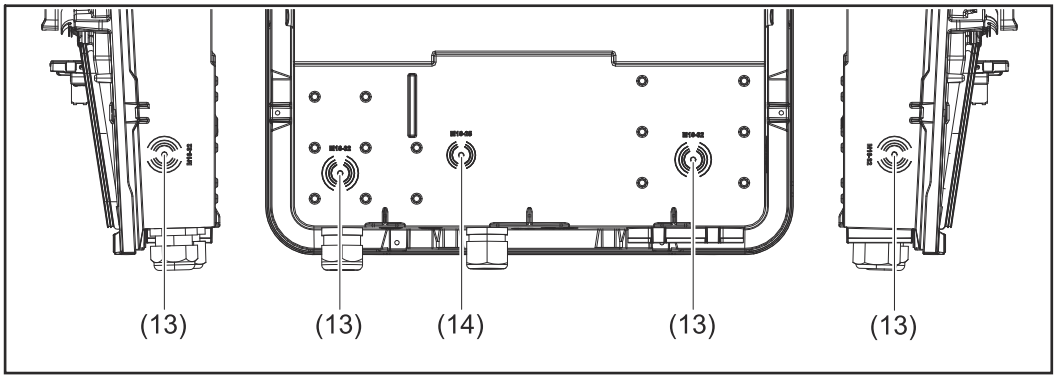

(1) 2x 5-pin DC push-in terminal
(2) Push-in WSD (wired shutdown) terminal
(3) Push-in terminals in the data communication area (Modbus, digital inputs and outputs)
(4) 3-pin push-in terminal for PV Point (OP)
(5) 3-pin AC push-in terminal
(6) Cable bushing/cable gland AC
(7) 6-pin ground electrode terminal
(8) Cable bushing/cable gland in the data communication area

(9) Connection area divider
(10) 10x DC cable bushings
(11) Optional cable bushing (M16)
(12) Optional cable bushing (M16 - M20)
(13) Optional cable bushing (M16 - M32)
(14) Optional cable bushing (M16 - M25)

Connection area divider

The connection area divider separates the high-voltage conductors (DC and AC) from the signal lines. To make it easier to reach the connection area, the divider can be removed for the connection work, and must be re-inserted.

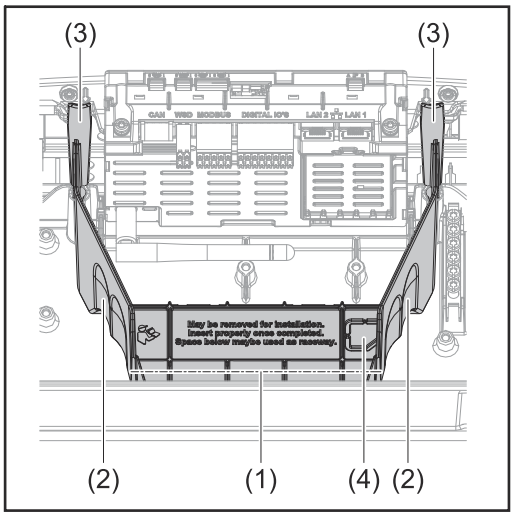

(1) Integrated cable duct
(2) Recesses for removing the connection area divider
(3) Snap tabs for locking/unlocking
(4) Defined breaking point for the Datcom connection

The integrated cable duct (1) allows for the lines to be laid from one area of the inverter to the other. As a result, multiple inverters can be easily installed next to each other.

Ground electrode terminal

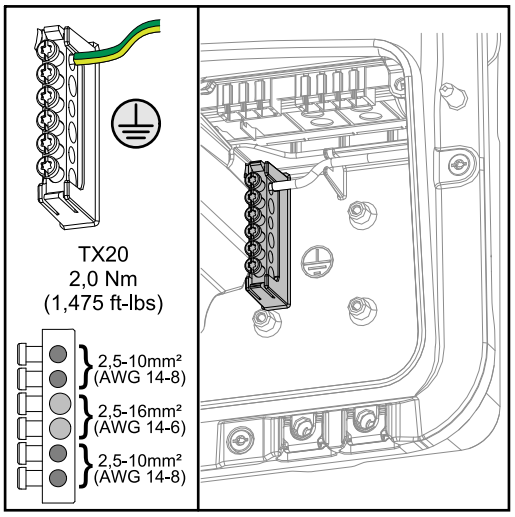

The ground electrode terminal ⏚ allows additional components to be earthed, such as:

- AC cable
- Module mounting system
- Ground rod

DC disconnector

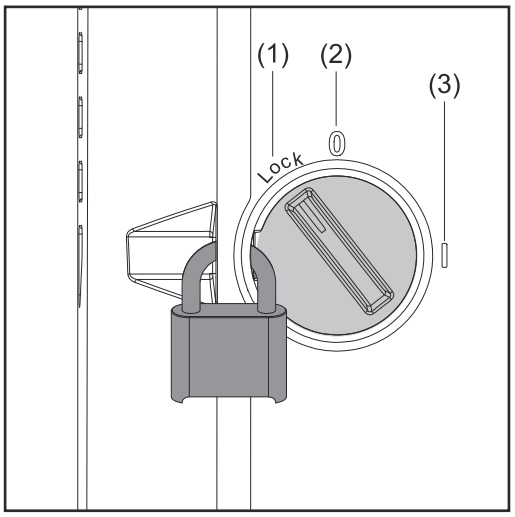

The DC disconnector has 3 switch settings:

(1) Locked/off (turned to the left)
(2) Off
(3) On

IMPORTANT!
In switch settings (1) and (3), a conventional padlock can be used to secure the inverter against being switched on/off. The national guidelines must be complied with in this respect.

Data communication area

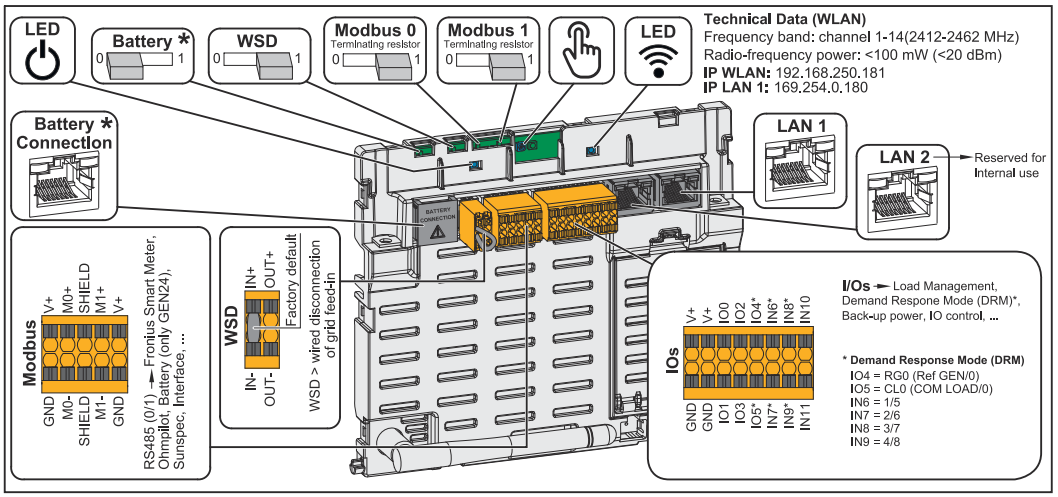

**Please not that the BAT (RJ45) interface is reserved for future use and not given at the moment.*

Operating status LED	Indicates the inverter operating status.
WSD (wired shutdown) switch	Defines the inverter as a WSD primary device or WSD secondary device. **Position 1:** WSD primary device **Position 0:** WSD secondary device
Modbus 0 (MB0) switch	Switches the terminating resistor for Modbus 0 (MB0) on/off. **Position 1:** Terminating resistor on (factory setting) **Position 0:** Terminating resistor off
Modbus 1 (MB1) switch	Switches the terminating resistor for Modbus 1 (MB1) on/off. **Position 1:** Terminating resistor on (factory setting) **Position 0:** Terminating resistor off

Optical sensor	To operate the inverter. See chapter **Button functions and LED status indicator** on page **35**.
Communication LED	Indicates the inverter connection status.
LAN 1	Ethernet connection for data communication (e.g. WLAN router, home network or for commissioning with a laptop see chapter **Installation using the web browser** on page **102**).
LAN 2	Reserved for future functions. Only use LAN 1 to avoid malfunctions.
I/Os terminal	Push-in terminal for digital inputs/ outputs. See chapter **Permissible cables for the data communication connection** on page **68**. The designations (RGO, CLO, 1/5, 2/6, 3/7, 4/8) on the terminal refer to the Demand Response Mode function, see chapter **Functions andI/Os** on page **109**.
WSD terminal	Push-in terminal for the WSD installation. See chapter "**WSD (wired shutdown)**" on page **30**.
Modbus terminal	Push-in terminal for the installation of Modbus 0, Modbus 1, 12 V and GND (ground). The data connection to the connected components is established via the Modbus terminal. **The inputs M0 and M1 can be selected for this purpose.** Max. 4 Modbus participants per input, see chapter **Modbus participants** on page **95**.

Button functions and LED status indicator

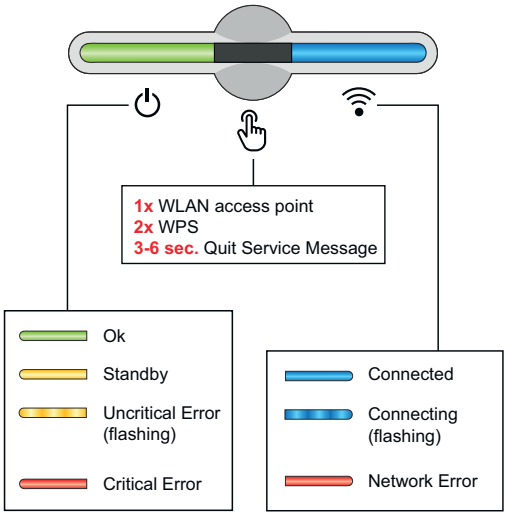

The status of the inverter is shown via the operating status LED. In the event of faults, carry out the individual steps in the Fronius Solar.start app.

The optical sensor is actuated by touching with a finger.

The status of the connection is shown via the communication LED. To establish the connection, carry out the individual steps in the Fronius Solar.start app.

Sensor functions	
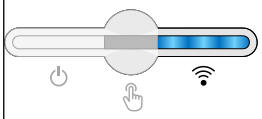	1x = WLAN Access Point (AP) is opened. Flashing blue
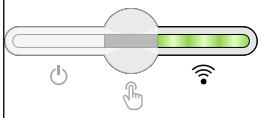	2x = WLAN Protected Setup (WPS) is activated. Flashing green
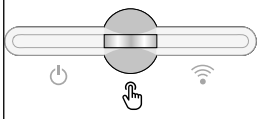	3 seconds (max. 6 seconds) = the service message is acknowledged. Flashing white (rapidly)

LED status indicator	
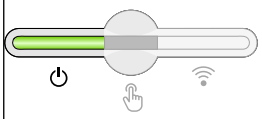	The inverter is operating correctly. Lights up green
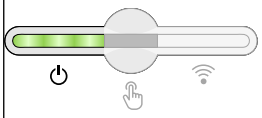	The inverter is performing the grid checks required by the applicable standards for feed-in mode. Flashing green
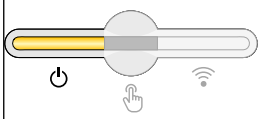	The inverter is in standby, is not operational (e.g. no feed-in at night) or is not configured. Lights up yellow
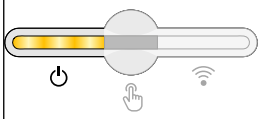	The inverter indicates a non-critical status. Flashing yellow
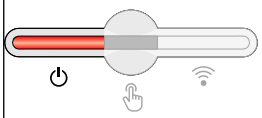	The inverter indicates a critical status and there is no grid power feed process. Lights up red
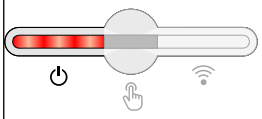	The inverter indicates a backup power overload. Flashing red
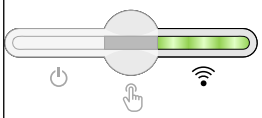	The network connection is being established via WPS. 2x = WPS search mode. Flashing green
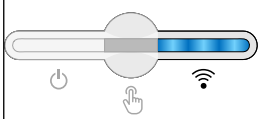	The network connection is being established via WLAN AP. 1x = WLAN AP search mode (active for 30 minutes). Flashing blue
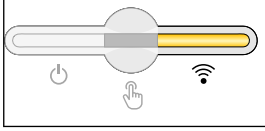	The network connection is not configured. Lights up yellow

LED status indicator	
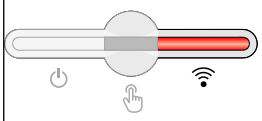	The inverter is operating correctly, a network fault is indicated. Lights up red
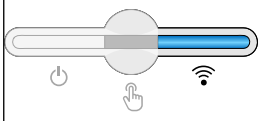	The network connection is active. Lights up blue
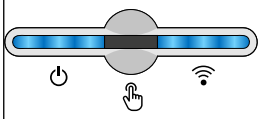	The inverter is performing an update. / Flashing blue
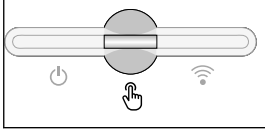	There is a service message. Lights up white

Internal schematic connection diagram of the IOs

On the V+/GND pin, it is possible to feed in a voltage of around 12.5–24 V (+ max. 20%) with an external power supply. The outputs IO 0–5 can then be operated with the external voltage. A maximum of 1 A can be drawn per output, with a maximum of 3 A allowed in total. The fuse protection must be located externally.

⚠ CAUTION!

Risk of polarity reversal at the terminals due to improper connection of external power supplies.
This may result in severe damage to the inverter.

- ▶ Check the polarity of the external power supply with a suitable measuring device before connecting it.
- ▶ Connect the cables to the V+/GND outputs with the correct polarity.

IMPORTANT!
If the total output (6 W) is exceeded, the inverter switches off the entire external power supply.

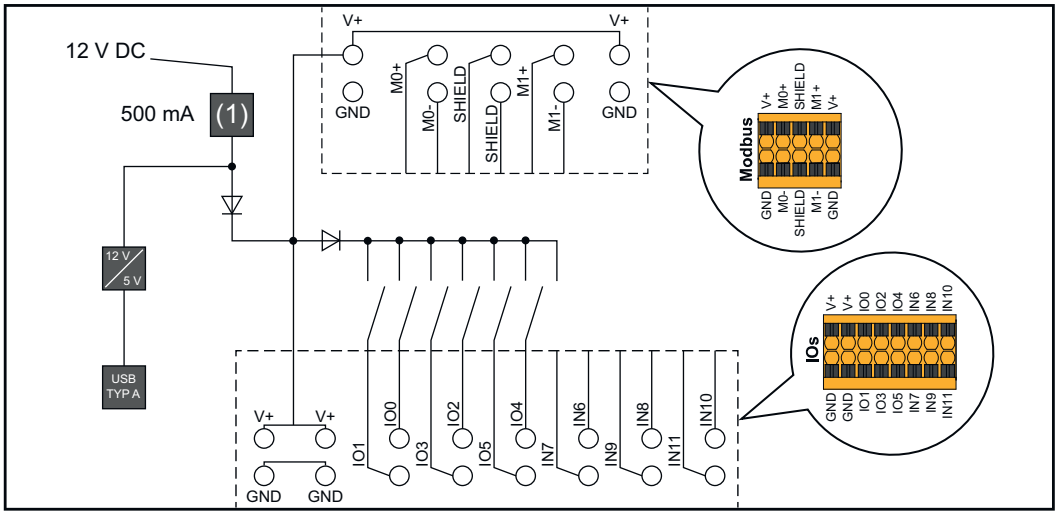

(1) Power limitation

Backup power variant - PV Point (OP)

General

Explanatory note - PV Point/PV Point Comfort

IMPORTANT!
If several backup power variants are available, please note that only one backup power variant may be installed and configured.

The inverter can provide 220 - 240 V at the PV Point/PV Point Comfort. A corresponding configuration must be set up during commissioning.

At 220 - 240 V output voltage, max. 13 A AC continuous current is available.

Example:
220 V *13 A = 2860 W
230 V *13 A = max. 3 kW

In backup power mode, some electrical appliances cannot function properly as starting currents are too high (for example, fridges and freezers). It is recommended to switch off non-essential loads during backup power mode. Overload capacity of 35 % is possible for a duration of 5 seconds, depending on the capacity of the PV modules and/or the battery at that moment in time.

There is a brief interruption when switching from grid-connected mode to backup power mode. For this reason, the backup power function cannot be used as an uninterruptible power supply, for example for computers.

If no energy from the battery or the PV modules is available in backup power mode, backup power mode ends automatically. If sufficient energy becomes available from the PV modules once again, backup power mode starts again automatically.

In the event of excessive consumption, backup power mode is stopped and the "backup power overload" status code is displayed on the inverter's LED status indicator (see **Button functions and LED status indicator** on page **35**). The maximum power in backup power mode according to the technical data must be observed.

PV Point (OP)

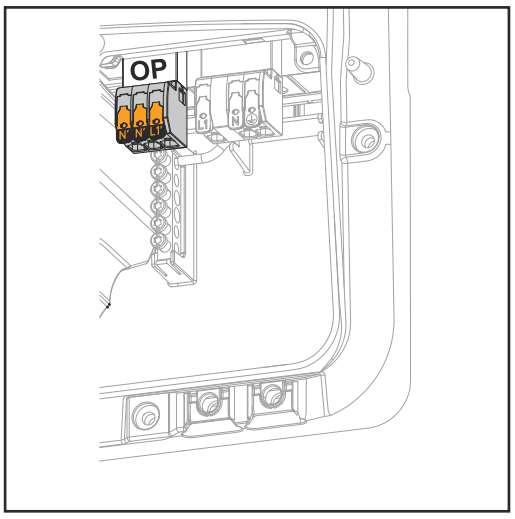

With the PV Point, in the event of a failure of the public grid, 1-phase electrical devices can be connected to the Opportunity Power (OP) terminal and supplied with a maximum power of 3 kW, if enough power is available from the PV modules or an optional battery. In grid-connected operation, the OP terminal is not supplied with voltage, therefore the connected loads will not be continuously supplied with power.

IMPORTANT!
A relay-based network switching setup is not possible.

Installation Instructions, see chapter **Connecting backup power - PV Point (OP)** on page **85**.

PV Point Comfort

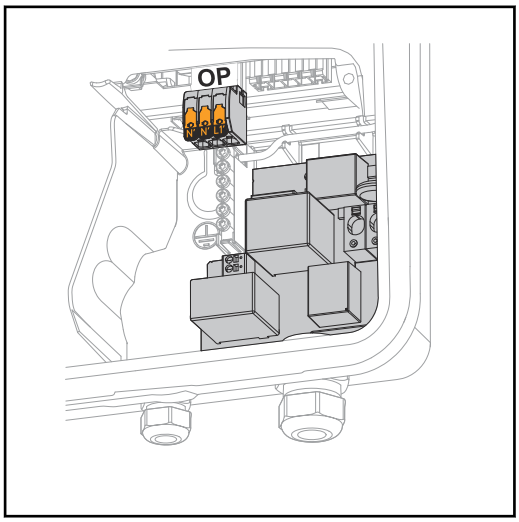

With PV Point Comfort, 1-phase electrical devices are continuously supplied up to a maximum power of 3 kW. Switching between grid-connected and backup power mode takes place automatically. In the event of a failure of the public grid or the inverter, the loads on the PV Point Comfort continue to be supplied. When the public grid is available again and stability is assured, the PV Point Comfort automatically switches to grid-connected operation and backup power mode is terminated.

IMPORTANT!
There must be sufficient power from the PV modules or a battery for backup power mode to run.

For further information and the Installation Instructions, see **PV Point Comfort** on page **161**.

Backup power variant - Full Backup

General

Prerequisites for backup power mode

IMPORTANT!
If several backup power variants are available, please note that only one backup power variant may be installed and configured.

In order to use the inverter's backup power function, the following prerequisites must be fulfilled:
- The inverter must support the backup power variant – Full Backup (see chapter **Function overview** on page **15**).
- A battery suitable for backup power use must be installed and configured.
- Correct cabling of the backup power system in the electrical installation or usage of a switch box from Enwitec (see chapter **Components for automatic Full Backup backup power changeover** on page **177** or **Circuit diagrams** on page **193**).
- Mount and configure the Fronius Smart Meter at the feed-in point.
- Attach a **warning notice for the backup power supply** (https://www.fronius.com/en/search-page, item number: 42,0409,0275) on the electrical distributor.
- Apply the necessary settings in the **"Devices and system components"** → **"Functions and pins"** → **"Backup power"** menu area and activate backup power.
- Follow the **backup power checklist** (https://www.fronius.com/en/search-page, item number: 42,0426,0365) step by step and confirm.

Transitioning from feeding energy into the grid to backup power mode

1. The public grid is monitored by the inverter's internal grid and system protection unit and by the Fronius Smart Meter connected to it.
2. **The public grid fails or specific grid parameters are dropped below or exceeded.**
3. The inverter carries out the measures necessary according to the country standard and then switches off.
4. The inverter starts backup power mode after a checking period.
5. All loads in the household that are in the backup power circuit are supplied by the battery and the PV modules. The remaining loads are not supplied with power and are safely isolated.

Transitioning from backup power mode to feeding energy into the grid

1. The inverter is operating in backup power mode.
2. **The public grid is functioning correctly again.**
3. The Fronius Smart Meter monitors the grid parameters on the public grid and passes this information to the inverter.
4. The stability of the returned public grid is determined by checking the measured values of the Fronius Smart Meter.
5. Backup power mode is terminated automatically or manually depending on the design of the backup power switchover facility.
6. All circuits are reconnected to the public grid and are supplied by the grid.
7. The inverter can start feeding energy into the grid again after performing the grid checks required by the relevant standard.

Backup power and energy saving mode

Under the following conditions, the battery and the inverter are switched to energy saving mode after a waiting time of 8 - 12 minutes and backup power mode is ended:

- The battery is discharged to the minimum state of charge and no energy is coming from the PV modules.
- The inverter is set to energy saving mode (standby mode).

If the battery and inverter are in energy saving mode, the system is reactivated by the following:

- Enough energy is available from the PV modules.
- The public grid is functioning again.
- The battery is switched off and on.

Automatic switch to backup power including backup power circuits and 1-pin separation, e.g. Austria or Australia

Functions

- Measuring and transferring the required parameters for energy management and Solar.web by the Fronius Smart Meter.
- Disconnecting from the public grid to enable operation in backup power mode if the grid parameters are outside the country-specific standards.
- Reconnecting to the public grid when the grid parameters are within the limits specified by the country-specific standards.
- Option of having a separate backup power circuit or several backup power circuits that are supplied even during failure of the public grid. The total load of the backup power circuits must not exceed the nominal output of the inverter. Furthermore, the performance of the connected battery must also be considered.

Transitioning from feeding energy into the grid to backup power mode

1. The public grid is monitored by the inverter's internal grid and system protection unit and by the Fronius Smart Meter connected to it.
2. **Failure of the public grid**.
3. The inverter carries out the measures necessary according to the country standard and then switches off.
   Contactor K1 drops out. This disconnects the backup power circuits and the inverter from the rest of the home network and from the public grid, as the main contacts of contactor K1 open. The inverter activates relay K3, which interrupts the supply to contactor K1. This prevents unintentional activation of contactor K1 and thus a grid connection when voltage is restored in the grid. The NC auxiliary contacts of contactor K1 send feedback to the inverter that the contactor is open (a condition for starting backup power mode).
4. The NO contact of relay K3 gives additional feedback to the inverter on whether the locking was successfully performed by relay K3.
5. The inverter decides based on the contactors' feedback as well as the measurements on the inverter terminals and the Smart Meter that backup power mode can be started.
6. After all the required activation tests have been carried out, the inverter starts backup power mode.
7. All loads in the backup power circuits are supplied with power. The remaining loads are not supplied with power and are safely isolated.

Transitioning from backup power mode to feeding energy into the grid

1. The inverter is operating in backup power mode. Contactor K1 to the public grid is open.
2. **Public grid available again.**
3. The Fronius Smart Meter monitors the grid parameters on the public grid and passes this information to the inverter.
4. The stability of the returned public grid is determined by checking the measured values of the Fronius Smart Meter.
5. The inverter ends backup power mode and disconnects the outputs.
6. The inverter deactivates K3. Contactor K1 is reactivated.
7. All circuits are reconnected to the public grid and are supplied by the grid. The inverter does not feed anything into the grid at this time.
8. The inverter can start feeding energy into the grid again after performing the grid checks required by the relevant standard.

Automatic switch to backup power all-pin separation, e.g. Germany, France, UK, Spain

Functions

- Measuring and transferring the required parameters for energy management and Solar.web by the Fronius Smart Meter.
- Disconnecting from the public grid to enable operation in backup power mode if the grid parameters are outside the country-specific standards.
- Reconnecting to the public grid when the grid parameters are within the limits specified by the country-specific standards.
- Establishing a proper ground connection for backup power mode to ensure the protection devices function correctly.
- Option of having a separate backup power circuit or several backup power circuits that are supplied even during failure of the public grid. The total load of the backup power circuits must not exceed the rated power of the inverter. Furthermore, the performance of the connected battery must also be considered.

Transitioning from feeding energy into the grid to backup power mode

1. The public grid is monitored by the inverter's internal grid and system protection unit and by the Fronius Smart Meter connected to it.
2. **Failure of the public grid**.
3. The inverter carries out the necessary measures according to the country standard and then switches off.
   Contactors K1, K4 and K5 drop out. This disconnects the emergency power circuits and the inverter from the rest of the home network and from the public grid, as the main contacts of contactor K1 open (all-pin). The NC auxiliary contacts of contactor K1 send feedback to the inverter that the contactor is open (a condition for starting backup power mode).
4. The NC main contacts of contactors K4 and K5 are closed, establishing a connection between the neutral conductor and the ground conductor. The two other NC main contacts of contactors K4 and K5 give feedback to the inverter that the ground connection has been established correctly (a condition for starting backup power mode).
5. The inverter activates relay K3, which interrupts the supply to contactors K1, K4 and K5. This prevents unintentional activation of contactors K1, K4 and K5 and thus a grid connection when voltage is restored in the grid.
6. The NO contact of relay K3 gives additional feedback to the inverter on whether the locking was successfully performed by relay K3.
7. The inverter decides based on the contactors' feedback as well as the measurements on the inverter terminals and the Smart Meter that backup power mode can be started.
8. After all the required activation tests have been carried out, the inverter starts backup power mode.
9. All loads in the backup power circuits are supplied with power. The remaining loads are not supplied with power and are safely isolated.

Transitioning from backup power mode to feeding energy into the grid

1. The inverter is operating in backup power mode. Contactor K1 to the public grid is open.
2. **Public grid available again.**
3. The Fronius Smart Meter monitors the grid parameters on the public grid and passes this information to the inverter.
4. The stability of the returned public grid is determined by checking the measured values of the Fronius Smart Meter.
5. The inverter ends backup power mode and disconnects the outputs.
6. The inverter deactivates K3. Power is restored to contactors K1, K4 and K5.
7. All circuits are reconnected to the public grid and are supplied by the grid. The inverter does not feed anything into the grid at this time.
8. The inverter can start feeding energy into the grid again after performing the grid checks required by the relevant standard.

Automatic switch to backup power all-pin separation, Italy

Functions

- Measuring and transferring the required parameters for energy management and Solar.web by the Fronius Smart Meter.
- Monitoring of the voltage and frequency grid parameters by the inverter.
- Disconnecting from the public grid to enable operation in backup power mode if the grid parameters are outside the country-specific standards.
- Reconnecting to the public grid when the grid parameters are within the limits specified by the country-specific standards.
- Establishing a correct ground connection for backup power mode.
- Option of having a separate backup power circuit or several backup power circuits that are supplied even during failure of the public grid. The total load of the backup power circuits must not exceed the nominal output of the inverter. Furthermore, the performance of the connected battery must also be considered.

Transitioning from feeding energy into the grid to backup power mode

1. The public grid is monitored by the inverter's internal grid and system protection unit and by an external grid and system protection unit.
2. **Failure of the public grid**
3. The inverter carries out the measures necessary according to the country standard and then switches off.
4. The external grid and system protection unit opens contactors K1 and K2 for grid monitoring. This disconnects the backup power circuits and the inverter from the rest of the home network and from the public grid, as the main contacts of the contactors K1 and K2 all-pin open. To ensure that the public grid has definitely been disconnected, the NC auxiliary contacts of contactor K1 give feedback to the external grid and system protection unit.
5. The NC main contacts of contactors K4 and K5 are closed, establishing a connection between the neutral conductor and the ground conductor. The two other NC main contacts of contactors K4 and K5 give feedback to the inverter that the ground connection has been established correctly.
6. The inverter activates relay K3, which activates the remote input of the external grid and system protection unit via an NC contact. This prevents a connection to the public grid when voltage is restored in the grid.
7. The NO contact of relay K3 gives additional feedback to the inverter on whether the locking was successfully performed by relay K3.
8. The inverter decides based on the contactor's feedback as well as the measurement on the inverter terminals and the Smart Meter that the emergency power mode can be activated.
9. The inverter starts backup power mode after a defined checking period.
10. All loads in the backup power circuits are supplied with power. The remaining loads are not supplied with power and are safely isolated.

Transitioning from backup power mode to feeding energy into the grid

1. The inverter is operating in backup power mode. The contactors K1 and K2 to the public grid are open.
2. **Public grid available again.**
3. The Fronius Smart Meter monitors the grid parameters on the public grid and passes this information to the inverter.
4. The stability of the returned public grid is determined by checking the measured values of the Fronius Smart Meter.
5. On the basis of adjustments that have been carried out, the inverter ends backup power mode and disconnects the outputs.
6. The inverter deactivates K3. Power is restored to contactors K1, K2, K4 and K5.
7. All circuits are reconnected to the public grid and are supplied by the grid. The inverter does not feed anything into the grid at this time.
8. The inverter can start feeding energy into the grid again after performing the grid checks required by the relevant standard.

Manual switch to backup power 1-pin separation, e.g. Australia / 2-pin separation, e.g. Germany

Functions

- Measuring and transferring the required parameters for energy management and Solar.web by the Fronius Smart Meter.
- Monitoring of the grid parameters by the inverter.
- Possibility of manual separation from the public grid if it fails or is deemed unstable.
- Option of having a separate backup power circuit or several backup power circuits that are supplied even during failure of the public grid. The total load of the backup power circuits must not exceed the rated power of the inverter. Furthermore, the performance of the connected battery must also be considered.
- If, in the event of a public grid failure, there is no manual switch to backup power mode within the first 10 minutes, this may cause the inverter and the battery to shut down. In order to then start backup power mode, manual switching must take place and a manual system start must be performed, if necessary (see chapter **Manual system start** on page **29**).
- It is possible to manually reconnect the inverter and loads in the backup power circuit to the public grid once it is deemed to be stable again. The inverter only starts feed-in mode once the required grid monitoring time has passed.

Transitioning from feeding energy into the grid to backup power mode

1. The public grid is monitored by the inverter's internal grid and system protection unit and by the Fronius Smart Meter connected to it.
2. **Failure of the public grid**.
3. The inverter carries out the measures necessary according to the country standard and then switches off.
4. The user switches the changeover switch Q1 from switch position 1 (grid operation) via switch position 0 to switch position 2 (backup power mode). This disconnects the backup power circuits and the inverter from the rest of the home network and from the public grid. With all-pin separation, the ground conductor and neutral conductor are additionally connected via the main contacts of the switch. Switch position 2 (backup power mode) is reported back to the inverter via a main contact of changeover switch Q1. In addition, an interruption of the WSD line occurs when the changeover switch Q1 is switched via switch position 0. This causes the inverter to shut down immediately. This behaviour is ensured via 2 contacts. Communication between the inverter and Fronius Smart Meter is optionally interrupted via a contact. The suspended communication prevents automatic termination of backup power mode when the public grid returns, so that the inverter remains in backup power mode until it is manually switched back.
5. The inverter decides based on feedback for switch position 2 as well as the measurements on the inverter terminals and the Fronius Smart Meter that backup power mode can be started.
6. After all the required activation tests have been carried out, the inverter starts backup power mode.
7. All loads in the backup power circuits are supplied with power. The remaining loads are not supplied with power and are safely isolated.

Transitioning from backup power mode to feeding energy into the grid

1. The inverter is operating in backup power mode. Changeover switch Q1 is in switch position 2 (backup power mode).
2. **Public grid available again.**
3. The user switches the changeover switch Q1 from switch position 2 (backup power mode) via switch position 0 to switch position 1 (grid operation). When switching via switch position 0, the inverter is switched off immediately. This is ensured via the contacts of the changeover switch Q1. To protect sensitive loads, it is advisable to remain in the zero position for at least 1 second during the changeover process from backup power mode to the public grid.
4. The inverter is again connected to the entire home network and to the public grid.
5. Communication between the inverter and Fronius Smart Meter is re-established.
6. The inverter can start feeding energy into the grid again after performing the grid checks required by the relevant standard.

Installation

General

Quick-lock system

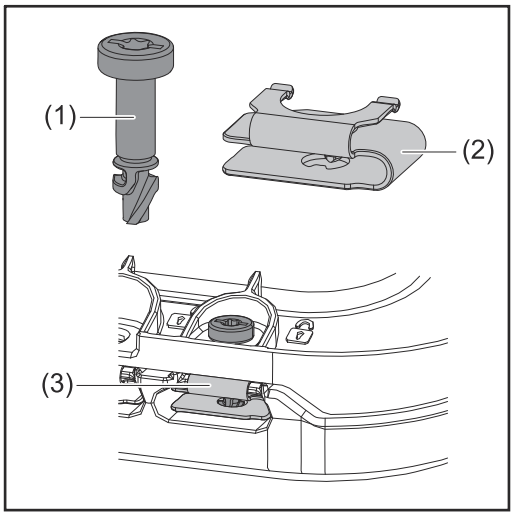

A quick-lock system (3) is used to mount the connection area cover and front cover. The system is opened and closed with a half-rotation (180°) of the captive screw (1) into the quick-lock spring (2).

The system is independent of torque.

NOTE!

Danger when using a drill driver.
This may result in the destruction of the quick-lock system due to overtorque.

- ▶ Use a screwdriver (TX20).
- ▶ Do not turn the screws more than 180°.

Warning notices on the device

Technical data, warning notices and safety symbols are affixed to the inverter. These warning notices and safety symbols must not be removed or painted over. They warn against incorrect operation which can lead to serious injury and damage.

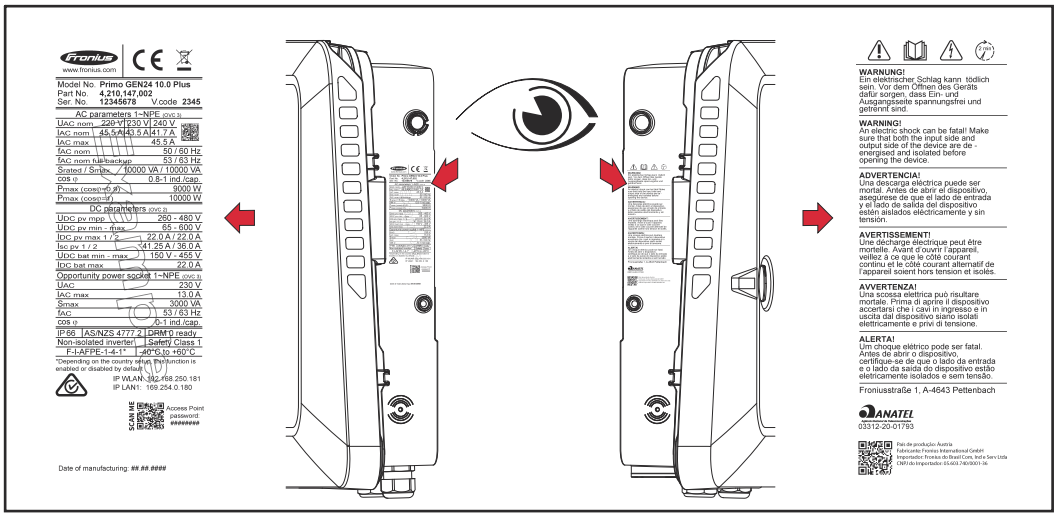

A 4-digit number (coded production date) is printed on the rating plate at the very bottom, from which the production date can be calculated.
If you subtract the value 11 from the first two digits, you get the production year.
The last two digits stand for the calendar week in which the device was produced.

Example:
Value on rating plate = **3205**
32 - 11 = 21 → Production year 2021
05 = Calendar week 05

Symbols on the rating plate:

CE mark – confirms compliance with applicable EU directives and regulations.

UKCA mark – confirms compliance with applicable UK directives and regulations.

WEEE mark – waste electrical and electronic equipment must be collected separately and recycled in an environmentally sound manner in accordance with the European Directive and national law.

RCM mark – tested in accordance with the requirements of Australia and New Zealand.

CMIM mark – tested in accordance with IMANOR requirements for import regulations and compliance with Moroccan standards.

Safety symbols:

Risk of serious injury and property damage due to incorrect operation.

Do not use the functions described here until you have fully read and understood the following documents:
- These Operating Instructions.
- All the Operating Instructions for the photovoltaic system components, especially the safety rules.

Dangerous electrical voltage.

Allow the capacitors of the inverter to discharge (2 minutes).

Warning notice text:

WARNING!
An electric shock can be fatal. Before opening the device, it must be disconnected and de-energized at the input and output.

System component compatibility

All installed components in the photovoltaic system must be compatible and have the necessary configuration options. The installed components must not restrict or negatively influence the functioning of the photovoltaic system.

NOTE!

Risk due to components in the photovoltaic system that are not compatible and/or have limited compatibility.
Incompatible components may limit and/or negatively affect the operation and/or functioning of the photovoltaic system.

- ▶ Only install components recommended by the manufacturer in the photovoltaic system.
- ▶ Before installation, check the compatibility of components not expressly recommended with the manufacturer.

Installation location and position

Choosing the location of the inverter

Please note the following criteria when choosing a location for the inverter:

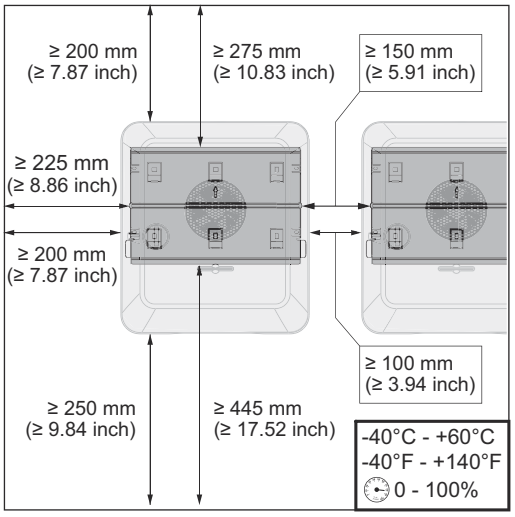

Only install on a solid, non-flammable surface.

Max. ambient temperatures:
-40 °C - +60 °C
-40 °F - +140 °F

Relative humidity:
0-100%

If the inverter is installed in a switch cabinet or similar enclosed space, ensure sufficient heat dissipation with forced-air ventilation.

For detailed information on the dimensions of the inverter, see chapter **Dimensions of the inverter** on page **215**.

When installing the inverter on the outer walls of cattle sheds, it is important to maintain a minimum clearance of 2 m between the inverter and the ventilation and building openings on all sides.

The following substrates are permissible for installation:
- Walls (corrugated metal walls [mounting rails], brick walls, concrete walls, or other non-flammable surfaces sufficiently capable of bearing loads)
- Mast or support (installed using mounting rails, behind the PV modules directly on the PV mounting system)
- Flat roofs (if installing on a film roof, make sure that the films comply with the fire protection requirements and are not highly flammable. Ensure compliance with the national provisions.)
- Covered car park roofs (no overhead installation)

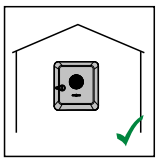

The inverter is suitable for indoor installation.

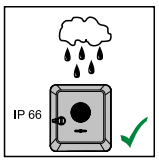

The inverter is suitable for outdoor installation.

Because of its IP 66 protection class, the inverter is resistant to water jets from any direction and can also be used in damp environments.

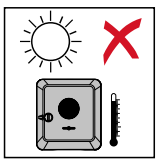

In order to minimise the heating up of the inverter, do not expose it to direct insolation.

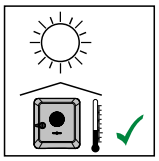

The inverter should be installed in a protected location, for example, below the PV modules or under an overhanging roof.

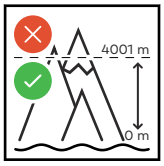

The inverter must not be installed or used at altitudes above 4000 m.

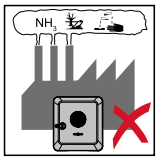

Do not install the inverter in:
- Areas where it may be exposed to ammonia, corrosive gases, acids or salts (e.g. fertiliser storage areas, vent openings for livestock stables, chemical plants, tanneries, etc.)

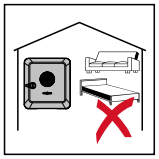

During certain operating phases the inverter may produce a slight noise. For this reason it should not be installed in an occupied living area.

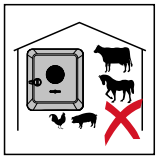

Do not install the inverter in:
- Areas where there is an increased risk of accidents from farm animals (horses, cattle, sheep, pigs, etc.)
- Stables or adjoining areas
- Storage areas for hay, straw, chaff, animal feed, fertilizers, etc.



The inverter is designed to be dustproof (IP 66). In areas of high dust accumulation, dust deposits may collect on the cooling surfaces, and thus impair the thermal performance. Regular cleaning is required in this case, see chapter **Operation in dusty environments** on page **173**. We therefore recommend not installing the device in areas and environments with high dust accumulation.



Do not install the inverter in:
- Greenhouses
- Storage or processing areas for fruit, vegetables or viticulture products
- Areas used in the preparation of grain, green fodder or animal feeds

Choosing the location of third-party batteries

IMPORTANT!
Refer to the manufacturer's documents for the suitable location for third-party batteries.

Installation position of inverter

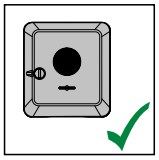

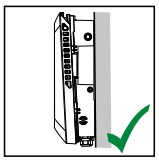

The inverter is suitable for vertical installation on a vertical wall or column.

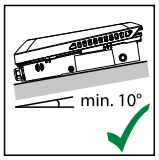

The inverter is suitable for installation on a sloping surface (min. slope to underside 10°).

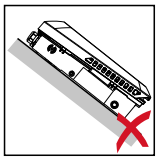

Do not install the inverter on a sloping surface with its connection sockets at the top.

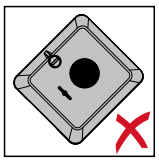

Do not install the inverter at an angle on a vertical wall or column.

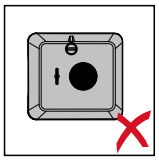

Do not install the inverter horizontally on a vertical wall or pillar.

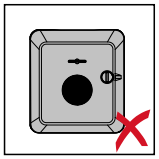

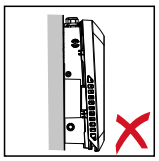

Do not install the inverter on a vertical wall or pillar with its connection sockets facing upwards.

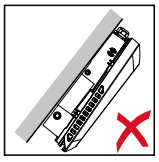

Do not install the inverter overhanging with the connection sockets at the top.

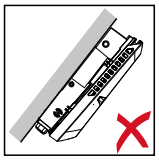

Do not install the inverter overhanging with the connection sockets at the bottom.

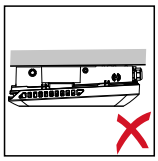

Do not install the inverter on the ceiling.

Install the mounting bracket and hang up the inverter

Selecting the fixing material

Use the corresponding fixing materials depending on the subsurface and observe the screw dimension recommendations for the mounting bracket.
The installer is responsible for selecting the correct type of fixing.

Properties of the mounting bracket

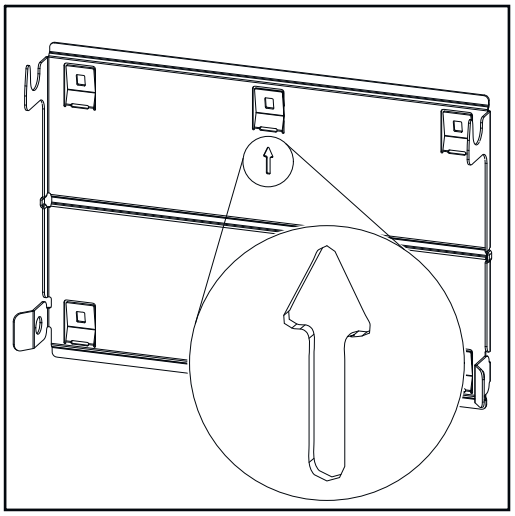

The mounting bracket (illustration) can also be used as a guide.

The pre-drilled holes on the mounting bracket are intended for screws with a thread diameter of 6-8 mm (0.24-0.32 inches). The distance from the left to the right pre-drilled hole is 406 mm (16 inches).

Unevenness on the mounting surface (such as coarse-textured plaster) is largely compensated by the mounting bracket.

Do not deform the mounting bracket

NOTE!

When fitting the mounting bracket to the wall or column, ensure that the mounting bracket does not become deformed.
A deformed mounting bracket may make it difficult to clip/swivel the inverter into position.

Fitting the mounting bracket to a wall

IMPORTANT!
When installing the mounting bracket, make sure that it is installed with the arrow pointing upwards.

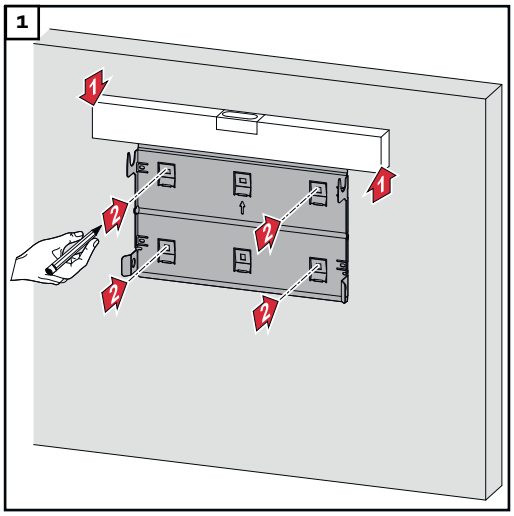

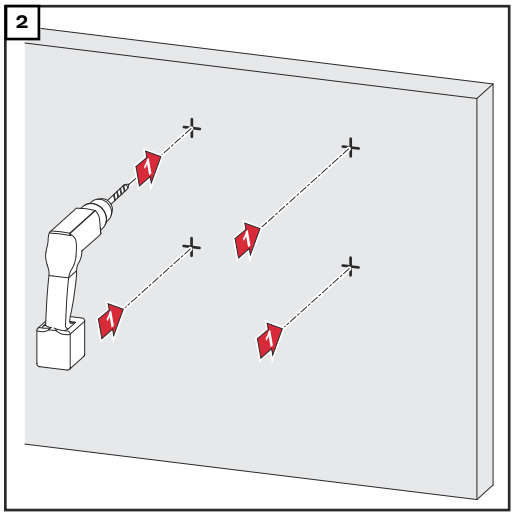

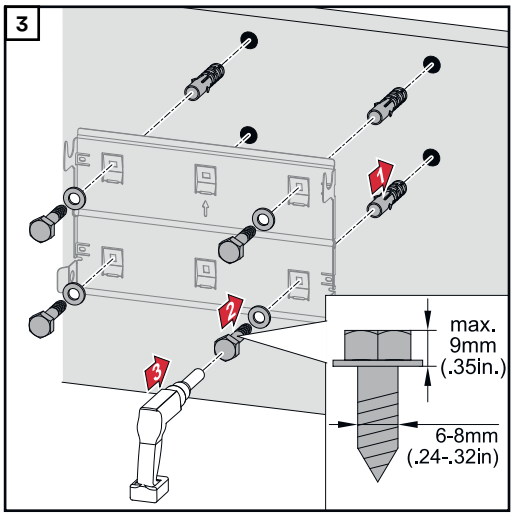

Installing the mounting bracket on a mast or beam

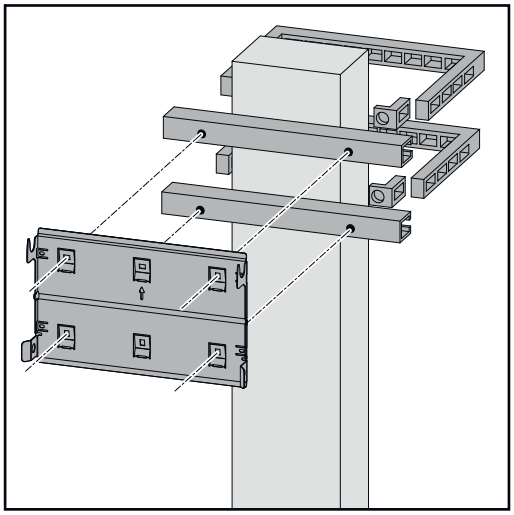

When installing the inverter on a mast or beam, Fronius recommends using the "Pole clamp" (order no. SZ 2584.000) mounting kit from Rittal GmbH.

The "Pole clamp" kit covers the following dimensions:

- Rectangular mast or beam with a side length of 50-150 mm (1.97-5.91 inches)
- Round mast or beam with a diameter of 40-190 mm (1.57-7.48 inches)

Attaching the mounting bracket to mounting rails

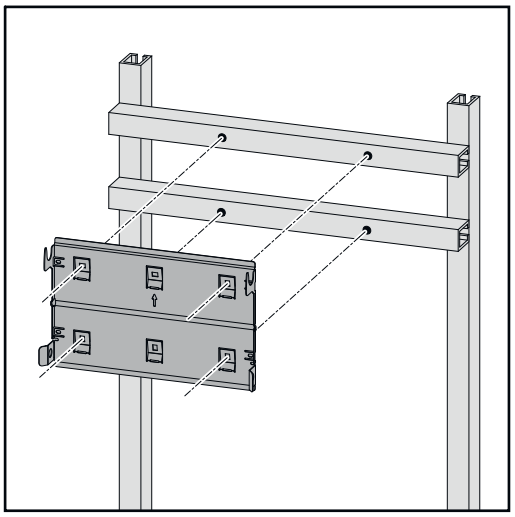

IMPORTANT!
The mounting bracket must be affixed at a minimum of four points.

Attaching the inverter to the mounting bracket

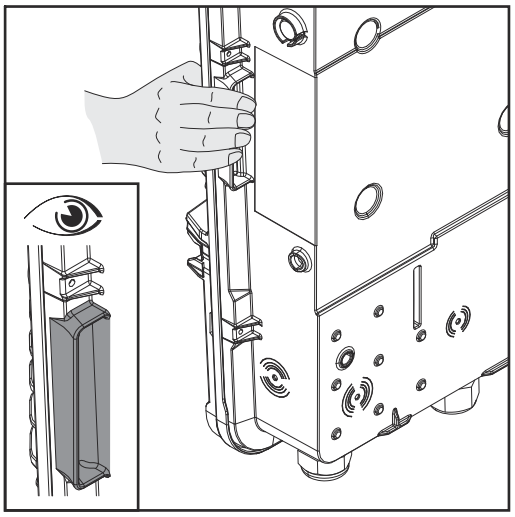

There are integrated grips on the side of the inverter which facilitate lifting/attaching.

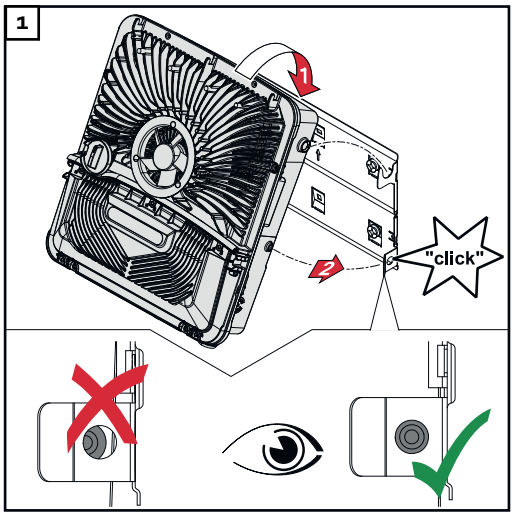

Clip the inverter into the mounting bracket from above. The connections must point downwards.

Push the lower part of the inverter into the snap-in tabs until the inverter audibly clicks into place on both sides.

Check that the inverter is correctly positioned on both sides.

Prerequisites for connecting the inverter

Different cable types

Solid	Multi-stranded	Fine-stranded	Fine-stranded with ferrule and collar	Fine-stranded with ferrule without collar
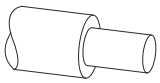	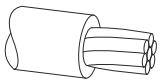	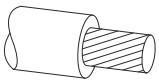	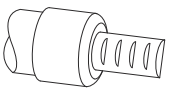	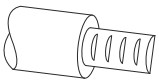

Permissible cables for the electrical con-

Round copper conductors can be connected to the terminals of the inverter as described below.

Grid connections with push-in terminal* Select a sufficiently large cable cross section based on the actual device output.					
Number of pins	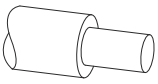	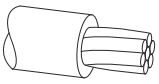	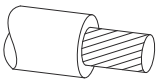	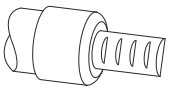	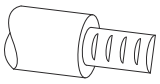
3	2.5-16 mm² AWG 14-6	2.5-16 mm² AWG 14-6	2.5-16 mm² AWG 14-6	2.5-16 mm² AWG 14-6	2.5-16 mm² AWG 14-6

Grid connections, backup power with push-in terminal* Select a sufficiently large cable cross section based on the actual device output!					
Number of pins	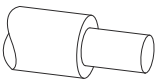	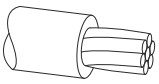	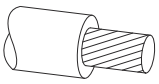	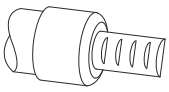	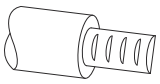
3	1.5-10 mm² AWG 16-8	1.5-10 mm² AWG 16-8	1.5-10 mm² AWG 16-8	1.5-6 mm² AWG 16-10	1.5-6 mm² AWG 16-10

PV/BAT connections with push-in terminal** Select a sufficiently large cable cross section based on the actual device output.					
Number of pins	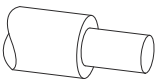	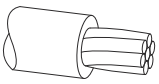	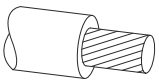	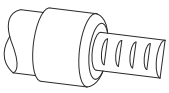	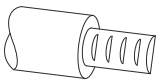
2 x 5	4-10 mm² AWG 12-8	4-10 mm² AWG 12-8	4-10 mm² AWG 12-8	4-6 mm² AWG 12-10	4-6 mm² AWG 12-10

Ground electrode terminal (6-pin) Select a sufficiently large cable cross section based on the actual device output.					
Number of pins	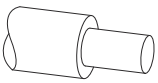	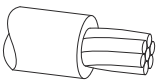	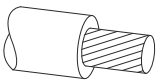	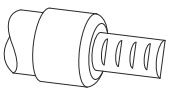	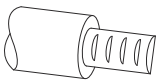

Ground electrode terminal (6-pin) Select a sufficiently large cable cross section based on the actual device output.					
2	2.5-16 mm² AWG 14-6	2.5-16 mm² AWG 14-6	2.5-16 mm² AWG 14-6	2.5-16 mm² AWG 14-6	2.5-16 mm² AWG 14-6
4	2.5-10 mm² AWG 14-8	2.5-10 mm² AWG 14-8	2.5-10 mm² AWG 14-8	2.5-10 mm² AWG 14-8	2.5-10 mm² AWG 14-8

* According to product standard IEC 62109, the ground conductor must correspond to the phase cross-section for phase cross-sections ≤16 mm², while for phase cross-sections >16 mm², it must be at least 16 mm².

For a conductor cross-section of 1.5 mm², the maximum permissible cable length is 100 m.

** The cable cross-section must be dimensioned in accordance with the installation situation and the specifications of the battery manufacturer.

Permissible cables for the data communication connection

Cables with the following design can be connected to the terminals of the inverter:

- Copper: round, solid
- Copper: round, fine-stranded

IMPORTANT!
Connect the individual conductors to an appropriate ferrule if several individual conductors are connected to one input of the push-in terminals.

WSD connections with push-in terminal						
Distance max.	**Stripping length**	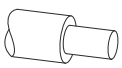	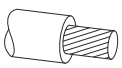	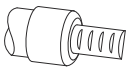	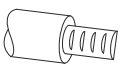	**Cable recommendation**
100 m 109 yd	10 mm 0.39 inch	0.14-1.5 mm² AWG 26 - 16	0.14-1.5 mm² AWG 26 - 16	0.14-1 mm² AWG 26 - 18	0.14-1.5 mm² AWG 26 - 16	min. CAT 5 UTP (unshielded twisted pair)

Modbus connections with push-in terminal						
Distance max.	**Stripping length**	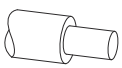	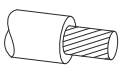	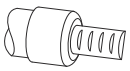	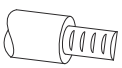	**Cable recommendation**
300 m 328 yd	10 mm 0.39 inch	0.14-1.5 mm² AWG 26 - 16	0.14-1.5 mm² AWG 26 - 16	0.14-1 mm² AWG 26 - 18	0.14-1.5 mm² AWG 26 - 16	min. CAT 5 STP (shielded twisted pair)

IO connections with push-in terminal						
Distance max.	**Stripping length**	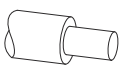	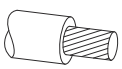	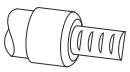	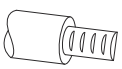	**Cable recommendation**
30 m 32 yd	10 mm 0.39 inch	0.14-1.5 mm² AWG 26 - 16	0.14-1.5 mm² AWG 26 - 16	0.14-1 mm² AWG 26 - 18	0.14-1.5 mm² AWG 26 - 16	Single conductor possible

LAN connections
Fronius recommends at least CAT 5 STP (shielded twisted pair) cables and a maximum distance of 100 m (109 yd).

Cable diameter of the AC cable

For a standard M32 cable gland **with a reducer:**
7-15 mm

For a standard M32 cable gland **without a reducer**:
11-21 mm
(with a cable diameter of less than 11 mm, the strain-relief force is reduced from 100 N to a maximum of 80 N)

With cable diameters greater than 21 mm, the M32 cable gland must be replaced by an M32 cable gland with a larger clamping area – item number: 42,0407,0780 – strain-relief device M32 x 1.5 KB 18-25.

Cable diameter of the DC cable

Cable diameter for the strain-relief device: max. 9 mm.
Cable diameter for the connection to the push-in terminal: max. 7 mm

IMPORTANT!
For double-insulated cables with a cable diameter over 7 mm, the outer layer of insulation must be removed to connect to the push-in terminal.

Maximum alternating current fuse protection

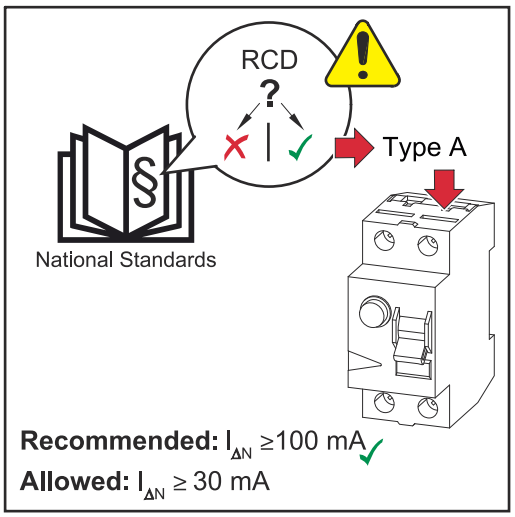

NOTE!

The national regulations of the grid operator or other factors may require a residual current circuit breaker in the AC connection lead.
For this situation, a type A residual current circuit breaker is generally adequate. Nevertheless, false alarms can be triggered for the type A residual-current circuit breaker in individual cases and depending on local conditions. For this reason, in accordance with national legislation, Fronius recommends that a residual-current circuit breaker with a tripping current of at least 100 mA suitable for frequency converters be used.

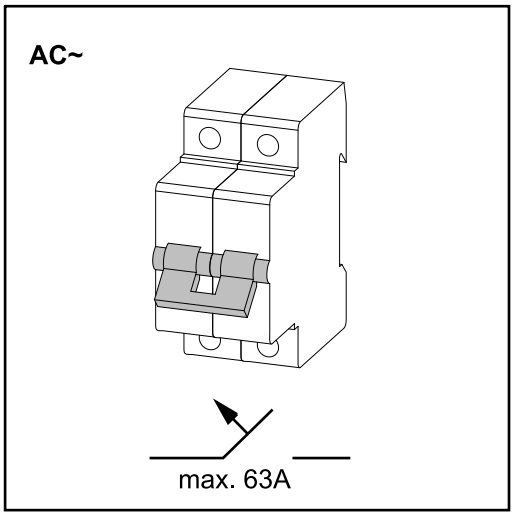

IMPORTANT!
The inverter can be fused with max. an automatic circuit breaker 63 A.

Inverter	Phases	AC output	Maximum fuse rating	Recommended fuse rating
Fronius Primo GEN24 8.0 kW	1	8000 W	63 A	50 A
Fronius Primo GEN24 10.0 kW	1	10,000 W	63 A	63 A

Connecting the inverter to the public grid (AC side)

Safety

⚠ WARNING!

Danger due to incorrect operation and incorrectly performed work.
This can result in serious injury and damage to property.
- ▶ Read the Installation and Operating Instructions before installing and commissioning the equipment.
- ▶ Only qualified personnel are authorised to commission your inverter and only within the scope of the respective technical regulations.

⚠ WARNING!

Danger due to grid voltage and DC voltage from solar modules that are exposed to light.
An electric shock can be fatal.
- ▶ Prior to any connection work, disconnect the inverter on the AC side and the DC side.
- ▶ Only an authorised electrical engineer is permitted to connect this equipment to the public grid.

⚠ WARNING!

Danger due to damaged and/or contaminated terminals.
This can result in serious injury and damage to property.
- ▶ Before making any connections, check the terminals for damage and contamination.
- ▶ Remove contamination in the de-energized state.
- ▶ Have defective terminals repaired by an authorised specialist.

IMPORTANT!
National standards and guidelines regarding load unbalance must be taken into account. The inverter does not have a communication link and does not automatically disconnect from the grid when the load unbalance is exceeded.

If the inverter is installed in Australia or New Zealand (required standard: AS/NZS4777.2:2020), the inverter must not be used as part of a three-phase combination, as there is no communication link between the inverters.

Connecting the inverter to the public grid (AC side)

NOTE!

The neutral conductor must be connected in order to operate the inverter.
It is not possible to operate the inverter in unearthed grids, such as IT grids (insulated grids without ground conductor).
- ▶ Make sure that the grid's neutral conductor is earthed.

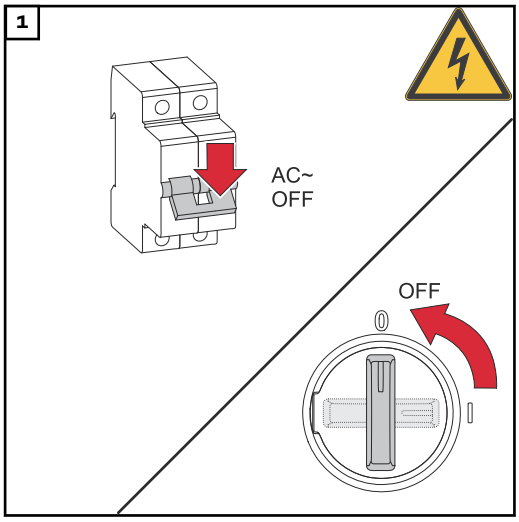

Turn off the automatic circuit breaker. Set the DC disconnector to the "Off" switch position.

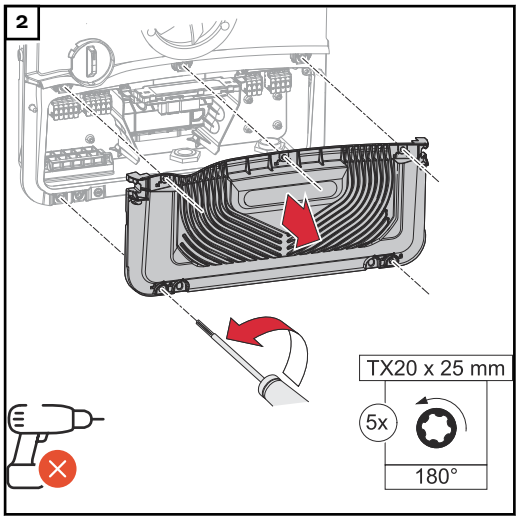

Loosen the 5 screws of the connection area cover by rotating them 180° to the left using a screwdriver (TX20). Remove the connection area cover from the device.

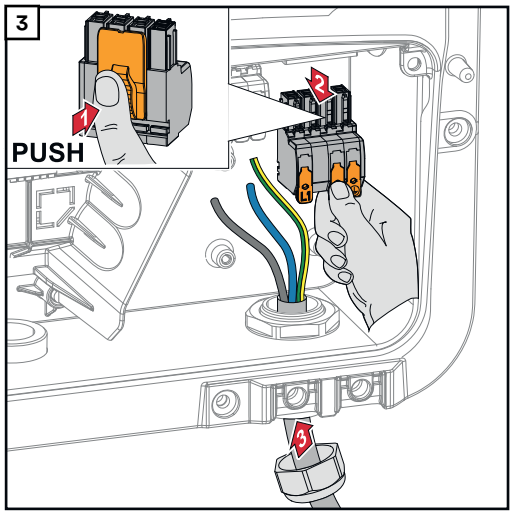

Press the lock on the back of the terminal and remove the AC terminal. Guide the mains cable from below through the cable gland on the right side.

IMPORTANT!
The ground conductor must be dimensioned longer and laid with a movement loop so that it is strained last in the event of a failure of the cable gland.
For more information on the cable gland, see chapter **Cable diameter of the AC cable** on page **69**.

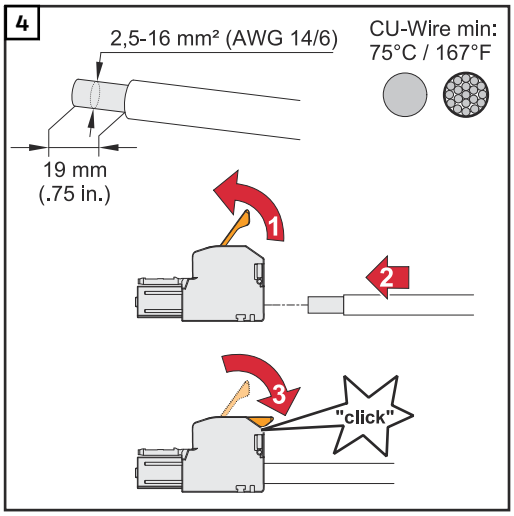

Strip the insulation of the single conductors by 19 mm.
Select the cable cross section in accordance with the instructions in **Permissible cables for the electrical connection** from page **67**.
Lift to open the terminal's operating lever and insert the stripped single conductor into the slot provided as far as it will go.
Then close the operating lever until it engages.

IMPORTANT!
Only one line may be connected to each pole. The AC cables can be connected to the AC terminal without ferrules.

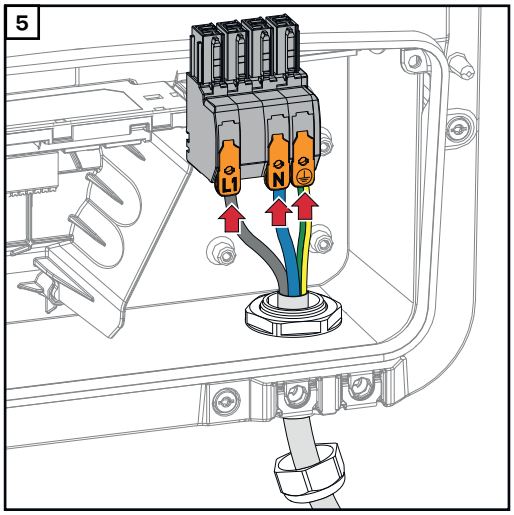

L1	Phase conductor
N	Neutral conductor
PE	Ground conductor

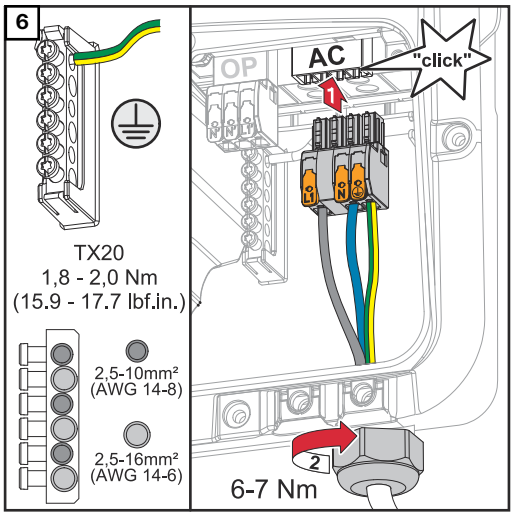

Insert the AC terminal into the AC slot until it engages. Fasten the union nut of the cable gland with a torque of 6 - 7 Nm.

Connecting solar module strings to the inverter

General comments regarding PV modules

To enable suitable PV modules to be chosen and to use the inverter as efficiently as possible, it is important to bear the following points in mind:

- If insolation is constant and the temperature is falling, the open-circuit voltage of the PV modules will increase. The open-circuit voltage must not exceed the maximum permissible system voltage. If the open-circuit voltage exceeds the specified values, the inverter will be destroyed and all warranty claims will be forfeited.
- The temperature coefficients on the data sheet of the PV modules must be observed.
- Exact values for sizing the PV modules can be obtained using suitable calculation tools, such as the **Fronius Solar.creator**.

IMPORTANT!
Before connecting up the PV modules, check that the voltage for the PV modules specified by the manufacturer corresponds to the actual measured voltage.

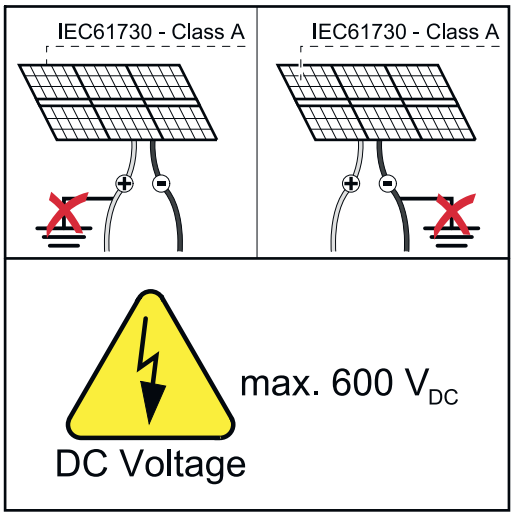

IMPORTANT!
The PV modules connected to the inverter must comply with the IEC 61730 Class A standard.

IMPORTANT!
Solar module strings must not be earthed.

Safety

⚠ WARNING!

Danger due to incorrect operation and incorrectly performed work.
This can result in serious injury and damage to property.

- ▶ Commissioning as well as maintenance and service work in the power module of the inverter must only be carried out by service personnel trained by Fronius and only within the scope of the respective technical regulations.
- ▶ Read the Installation and Operating Instructions before installing and commissioning the equipment.

⚠ WARNING!

Danger due to grid voltage and DC voltage from solar modules that are exposed to light.
This can result in serious injury and damage to property.

- ▶ Ensure that the AC and DC side of the inverter are de-energised before carrying out any connection, maintenance or service tasks.
- ▶ Only an authorised electrical engineer is permitted to connect this equipment to the public grid.

⚠ WARNING!

Danger due to damaged and/or contaminated terminals.
This can result in serious injury and damage to property.

- ▶ Before making any connections, check the terminals for damage and contamination.
- ▶ Remove contamination in the de-energized state.
- ▶ Have defective terminals repaired by an authorised specialist.

Module array - general information

2 independent PV inputs (PV 1 and PV 2) are available. These can be connected to a different number of modules.

When using for the first time, set up the module array according to the respective configuration (also possible later in the **"System configuration"** menu under the **"Components"** menu item).

Module array configuration 8 - 10 kW

IMPORTANT!
The installation must be carried out in accordance with the nationally applicable standards and directives. If the Arc Fault Circuit Interrupter integrated in the inverter is used for the requirement according to IEC 63027 for arc detection, the solar module strings must not be combined in front of the inverter.

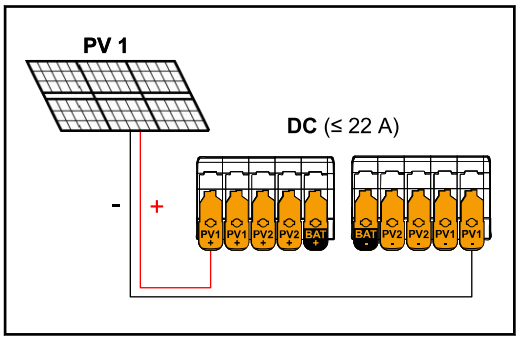

Current equal to or less than 22 A (I_{dcmax}).

Module array settings:
PV 1: **ON**
PV 2: **OFF**

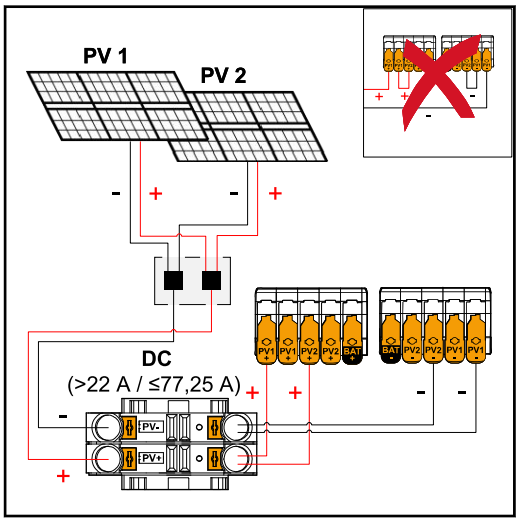

Combined solar module strings with total current greater than 22 A (I_{dcmax}).

Module array settings:
PV 1: **ON**
PV 2: **OFF**
PV 1 + PV 2 (connected in parallel): **ON**

IMPORTANT!
The maximum current load of a single terminal is 22 A. PV-connection strings with a total current of more than 22 A must be split between both PV inputs upstream of the terminals ($I_{SC\ max}$ ≤ 77.25 A). The plug connection for splitting the total current must be sufficiently dimensioned, suitable and correctly installed. Splitting the current by bridging from PV 1 to PV 2 at the terminal is not permitted.

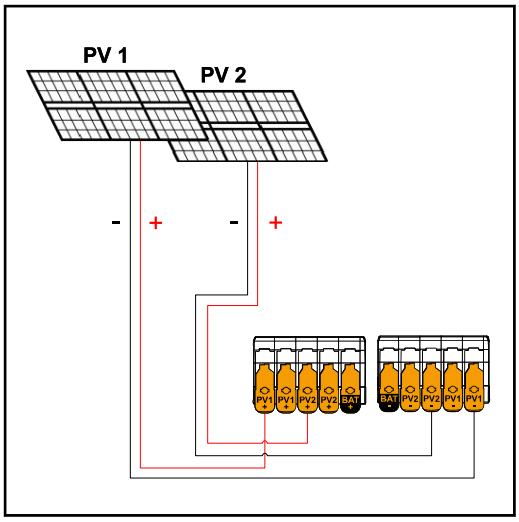

PV 1 less than or equal to 41.25 A ($I_{SC\ PV1}$)
PV 2 less than or equal to 36 A ($I_{SC\ PV2}$)

Module array settings:
PV 1: **ON**
PV 2: **ON**

Connecting the solar module strings to the inverter

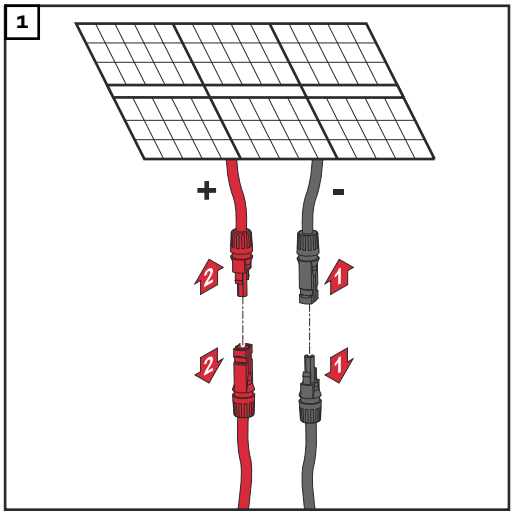

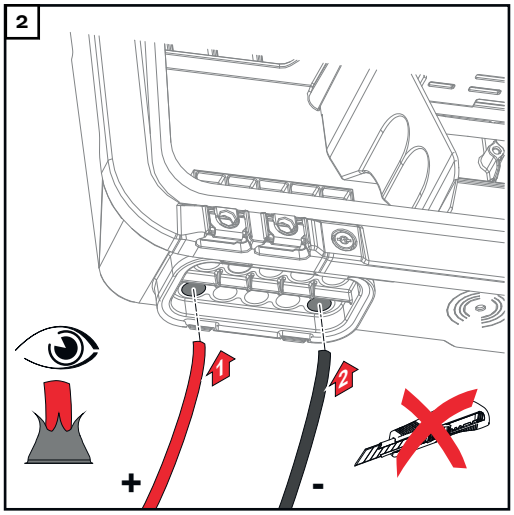

Push the DC cables through the DC bushings by hand.

IMPORTANT!
Before stripping the insulation, push the cables through the DC bushings to prevent individual wires being bent or broken.

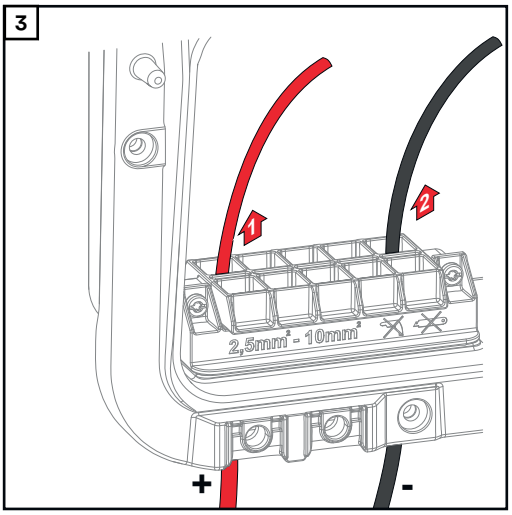
3
1
2
2,5mm² - 10mm²
+
-

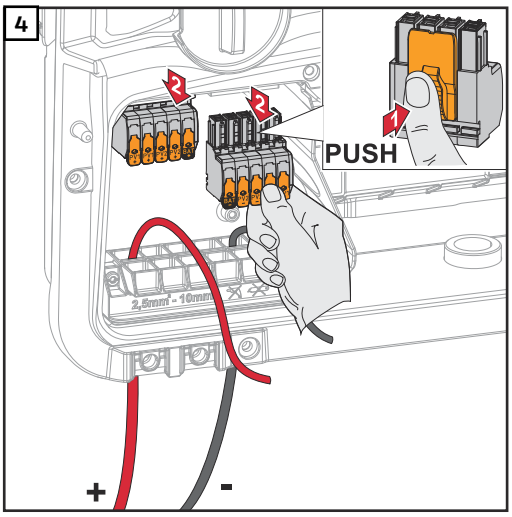
4
2
2
1
PUSH
+
-

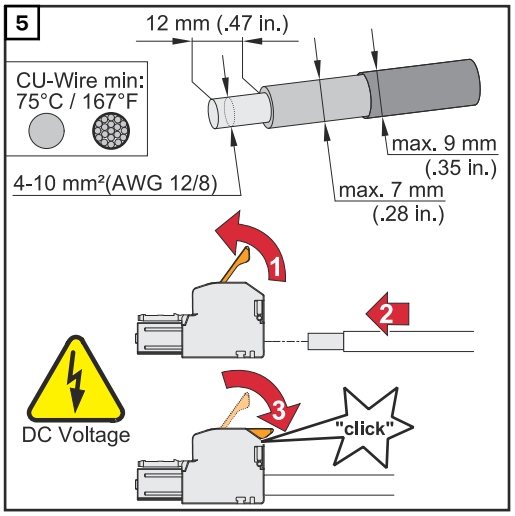

Select the cable cross section in accordance with the instructions in **Permissible cables for the electrical connection** from page **67**.
Strip the insulation of the single conductors by 12 mm. Lift to open the terminal's operating lever and insert the stripped single conductor into the slot provided, in each case as far as it will go. Then close the operating lever until it engages.

⚠ WARNING!

Danger due to individual conductors in the terminal that are loose and/or improperly connected.
This can result in serious injury and damage to property.

- ▶ Only connect one single conductor in the slot provided for each terminal.
- ▶ Check that the single conductor is held securely in the terminal.
- ▶ Ensure that all of the single conductor is within the terminal and that no individual wires are sticking out of the terminal.

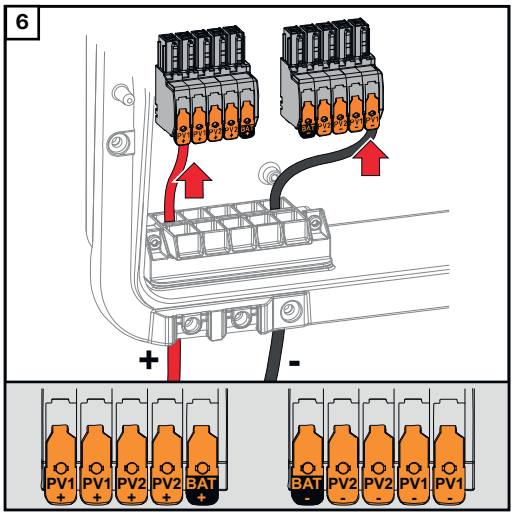

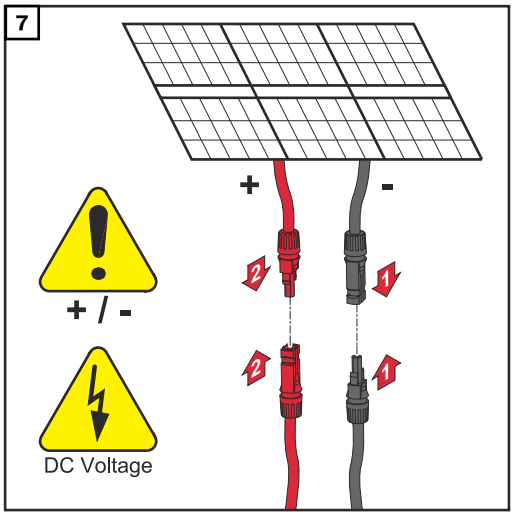

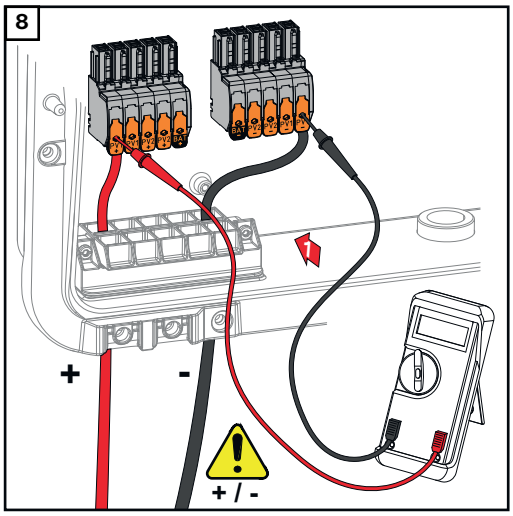

Use a suitable measuring instrument to check the voltage and polarity of the DC cabling. Remove both DC terminals from the slots.

⚠ CAUTION!

Danger due to polarity reversal at the terminals.
This may result in severe damage to the inverter.

- ▶ Use a suitable measuring instrument to check the polarity of the DC cabling.
- ▶ Use a suitable measuring instrument to check the voltage (**max. 600 V_{DC}**)

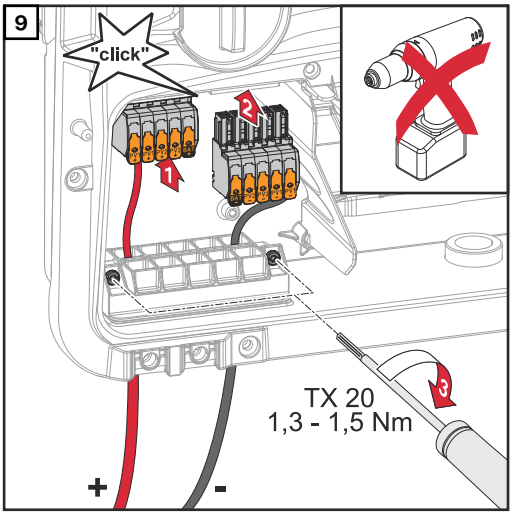

Insert the DC terminals into the respective slot until they engage. Fasten the screws of the cable guide to the housing using a screwdriver (TX20) and a torque of 1.3-1.5 Nm.

NOTE!

Risk due to overtorque on the strain relief.
This may result in damage to the strain-relief device.

- ▶ Do not use a drill driver.

Connecting the battery to the inverter

Safety

⚠ WARNING!

Danger due to incorrect operation and incorrectly performed work.
This can result in serious injury and damage to property.
- ▶ Commissioning as well as maintenance and service work on the inverter and battery must only be carried out by service personnel trained by the respective inverter or battery manufacturer and only within the scope of the respective technical regulations.
- ▶ Read the Installation and Operating Instructions provided by the respective manufacturer before installing and commissioning the equipment.

⚠ WARNING!

Danger due to grid voltage and DC voltage from solar modules that are exposed to light and from batteries.
This can result in serious injury and damage to property.
- ▶ Ensure that the AC and DC side of the inverter and the battery are de-energised before carrying out any connection, maintenance or service tasks.
- ▶ Only an authorised electrical engineer is permitted to connect this equipment to the public grid.

⚠ WARNING!

Danger due to damaged and/or contaminated terminals.
This can result in serious injury and damage to property.
- ▶ Before making any connections, check the terminals for damage and contamination.
- ▶ Remove contamination in the de-energized state.
- ▶ Have defective terminals repaired by an authorised specialist.

Connecting the battery on the DC side

⚠ CAUTION!

Danger due to operation of the battery above the permissible altitude as specified by the manufacturer.
Operating the battery above the permissible altitude can result in restricted operation, failure of the operation, and unsafe states of the battery.
- ▶ Adhere to the manufacturer's instructions regarding the permissible altitude.
- ▶ Operate the battery only at the altitude specified by the manufacturer.

IMPORTANT!
Prior to installing a battery, ensure that the battery is switched off. The max. DC cable length for the installation of external batteries must be taken into account according to the manufacturer's specifications, see chapter **Suitable batteries** on page **26**.

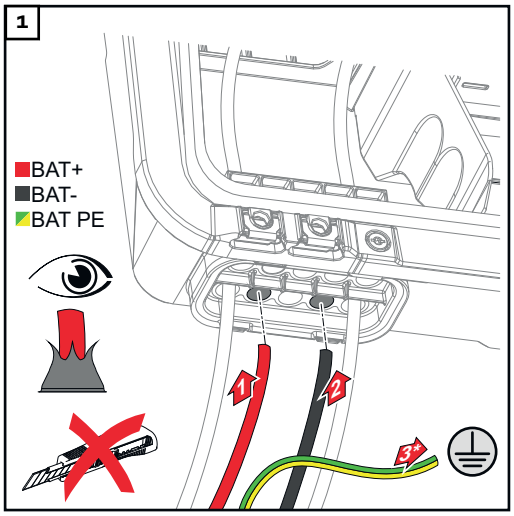

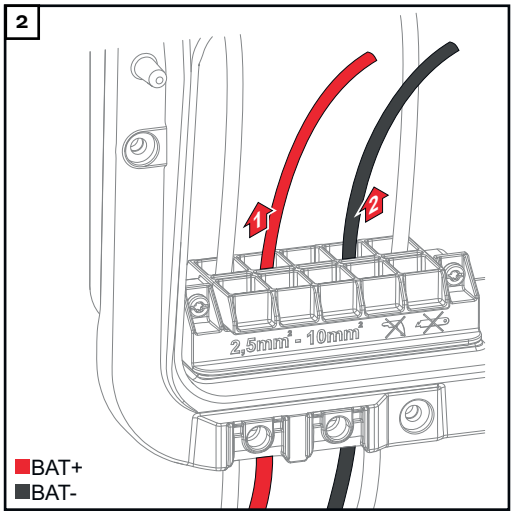

Manually push the battery cables through the DC bushings.

* The battery ground conductor must be connected externally (e.g. switch cabinet). When connecting an LG FLEX battery, the battery ground conductor can be connected in the inverter (see chapter **Connecting the LG FLEX ground conductor** on page **84**. Observe the minimum cross section of the ground conductor to the battery.

IMPORTANT!
Before stripping the insulation, push the cables through the DC bushings to prevent individual wires being bent or broken.

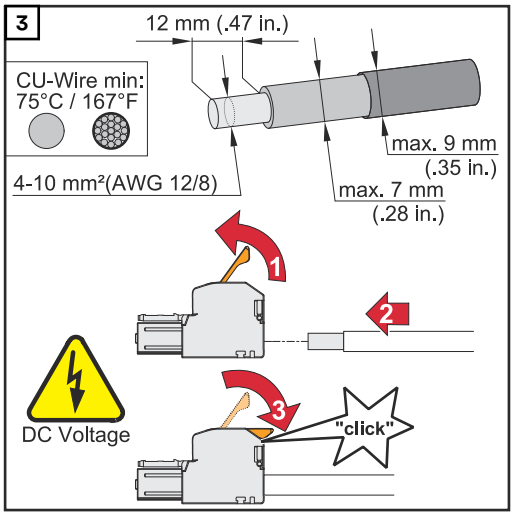

Select the cable cross section in accordance with the instructions in **Permissible cables for the electrical connection** from page **67**.
Strip the insulation of the individual conductors by 12 mm. Lift to open the terminal's operating lever and insert the stripped single conductor into the slot provided, in each case as far as it will go. Then close the operating lever until it engages.

⚠ WARNING!

Danger due to individual conductors in the terminal that are loose and/or improperly connected.
This can result in serious injury and damage to property.

- ▶ Only connect one single conductor in the slot provided for each terminal.
- ▶ Check that the single conductor is held securely in the terminal.
- ▶ Ensure that all of the single conductor is within the terminal and that no individual wire strands are sticking out of the terminal.

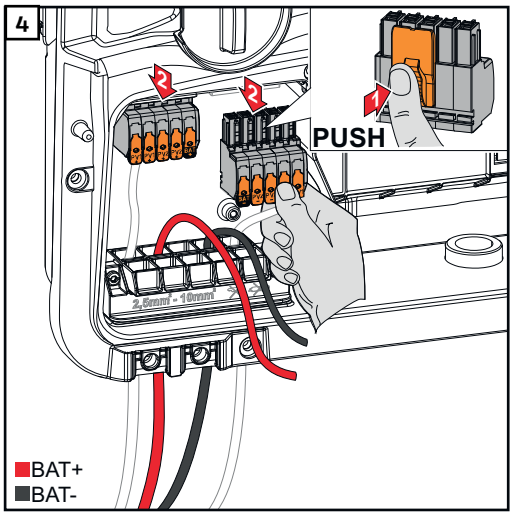

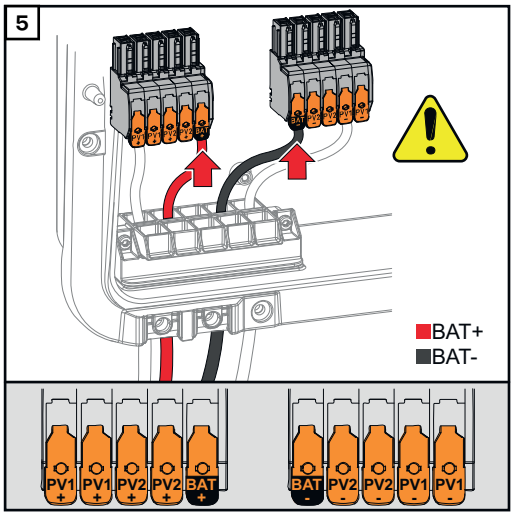

⚠ CAUTION!

Risk due to overvoltage when using other slots on the terminal.
This may result in damage to the battery and/or the PV modules due to discharge.

▶ Only use the slots marked BAT for connecting the battery.

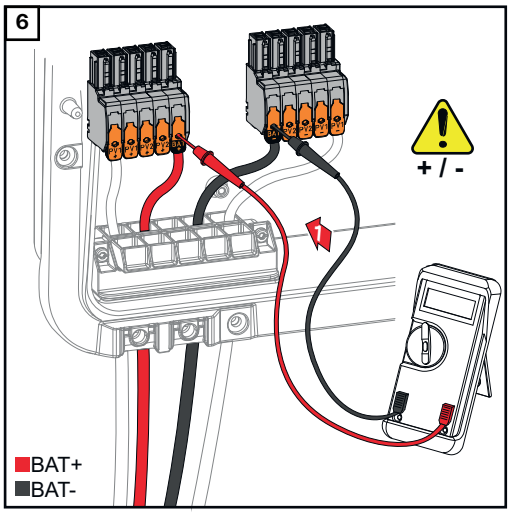

⚠ CAUTION!

Danger due to polarity reversal at the terminals.
Serious damage to the PV system may result.

▶ Use a suitable measuring instrument to check the polarity of the DC cabling when the battery is switched on.

▶ The maximum voltage for the battery input must not be exceeded (see **Technical data** on page **182**).

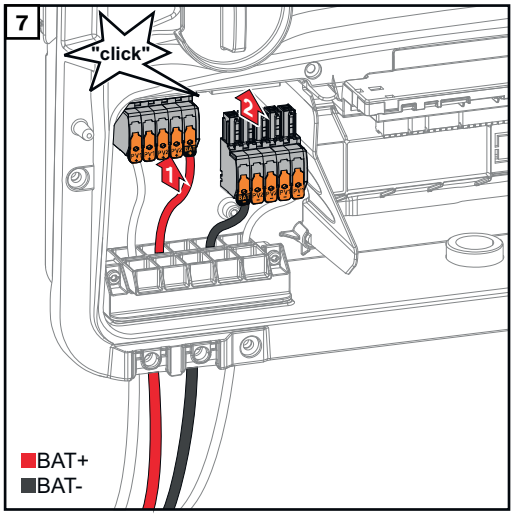

Insert the DC terminals into the respective slot until they engage.

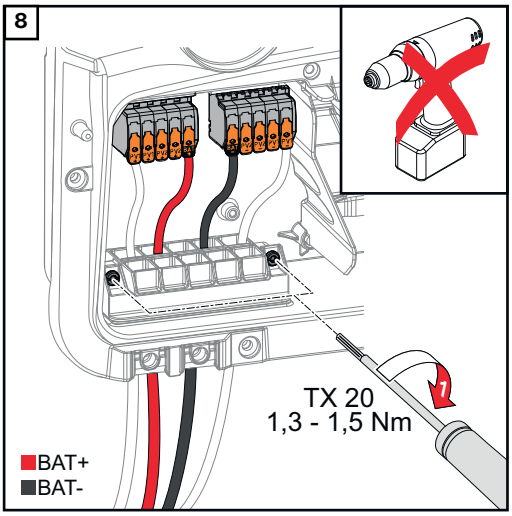

Fasten the screws of the cable guide to the housing using a screwdriver (TX20) and a torque of 1.3 – 1.5 Nm.

NOTE!

Risk due to overtorque at the strain-relief device.
This may result in damage to the strain-relief device.
▶ Do not use a drill driver.

IMPORTANT!
Information for the battery-side connection can be found in the Installation Instructions from the relevant manufacturer.

Connecting the LG FLEX ground conductor

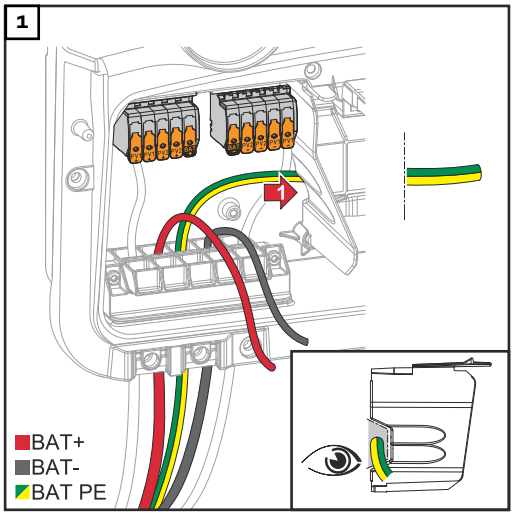

Route the battery ground conductor into the integrated cable duct of the connection area divider and into the AC connection area.

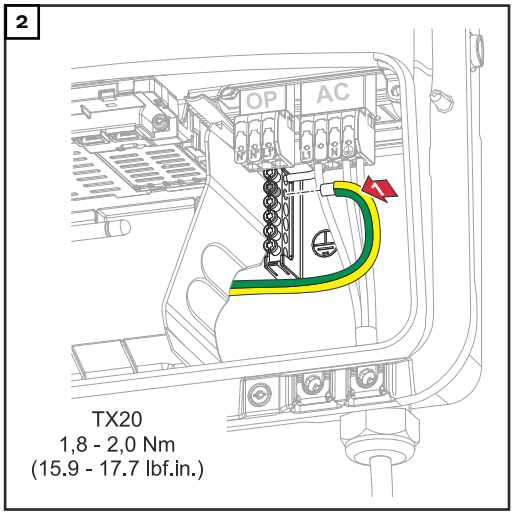

Fasten the battery ground conductor to the second input of the ground electrode terminal from the top using a screwdriver (TX20) and a torque of 1.8 – 2 Nm.

IMPORTANT!
Information for the battery-side connection can be found in the Installation Instructions from the relevant manufacturer.

Connecting backup power - PV Point (OP)

Safety

⚠ WARNING!

Danger due to work that has been carried out incorrectly.
This can result in serious injury and damage to property.
- ▶ Installing and connecting an option must only be carried out by service personnel trained by Fronius and only within the scope of the respective technical regulations.
- ▶ Follow the safety rules.

⚠ WARNING!

Danger due to damaged and/or contaminated terminals.
This can result in serious injury and damage to property.
- ▶ Before making any connections, check the terminals for damage and contamination.
- ▶ Remove contamination in the de-energized state.
- ▶ Have defective terminals repaired by an authorised specialist.

NOTE!

During the switch from grid-connected operation to backup power mode, momentary interruptions will occur. The PV Point output requires PV power from the solar modules or a battery to power the connected loads.
Connected loads will not be supplied with power during the switchover.
- ▶ Do not connect any loads that require an uninterruptible supply (e.g. IT networks, life-sustaining medical devices).

IMPORTANT!
The valid national laws, standards and provisions, as well as the specifications of the relevant grid operator are to be taken into account and applied.
It is highly recommended that the specific installation be agreed with the grid operator and explicitly approved by this operator. This obligation applies to system constructors in particular (e.g. installers).

Installation

NOTE!

All loads that have to be supplied via the OP terminal must be protected by means of a residual current circuit breaker.
In order to ensure the residual current circuit breaker operates properly, a connection must be established between the neutral conductor N´ (OP) and earth.

For the Circuit Diagram recommended by Fronius, see **Circuit Diagram - PV Point (OP)** on page **199**.

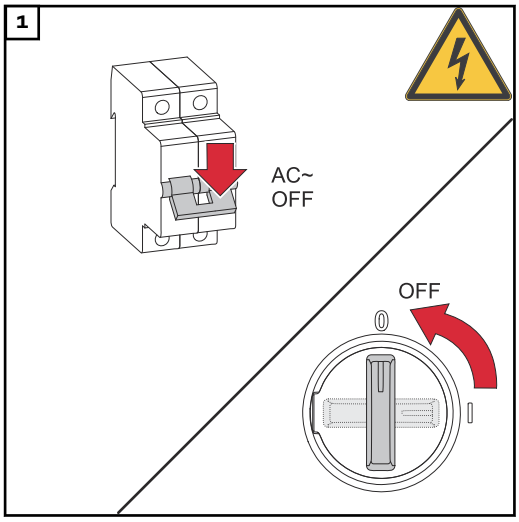

Switch off the automatic circuit breaker and DC disconnector. Turn the DC disconnector to the "Off" switch position.

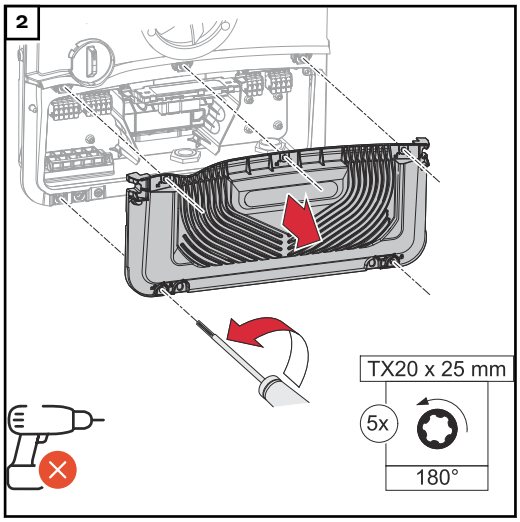

Loosen the 5 screws of the connection area cover by rotating them 180° to the left using a screwdriver (TX20). Remove the connection area cover from the device.

⚠ CAUTION!

Danger from faulty or incorrect holes.
This may lead to injuries to the eyes and hands as a result of flying debris and sharp edges, as well as damage to the inverter.

- ▶ When drilling, wear suitable protective goggles.
- ▶ Only use a step drill when drilling.
- ▶ Ensure that nothing is damaged inside the device (e.g. connection block).
- ▶ Adapt the diameter of the hole to match the corresponding connection.
- ▶ Deburr the holes using a suitable tool.
- ▶ Remove the drilling residues from the inverter.

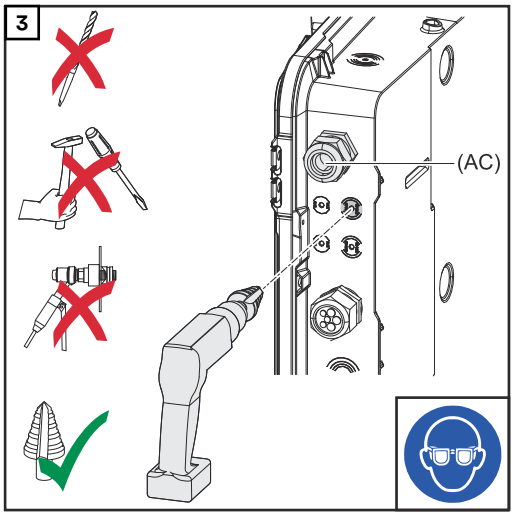

Drill out the optional cable guide with a step drill.

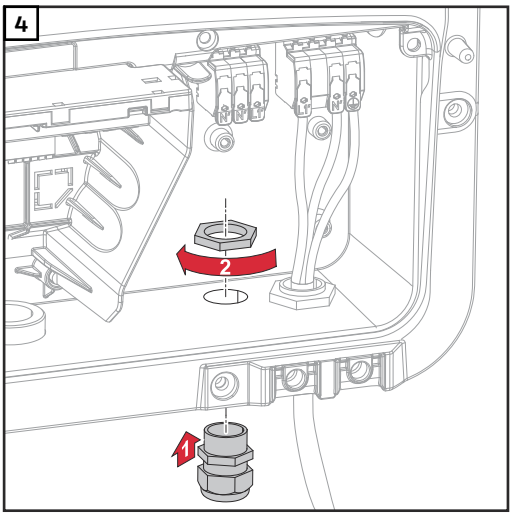

Insert the cable gland into the hole and secure to the torque specified by the manufacturer.

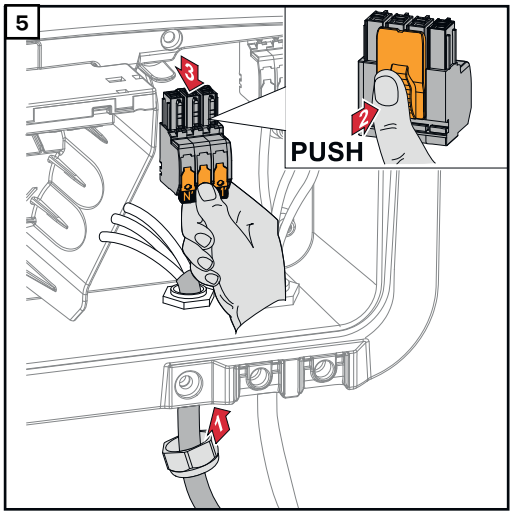

Guide the mains cable through the cable gland from below.
Pull off the OP terminal.

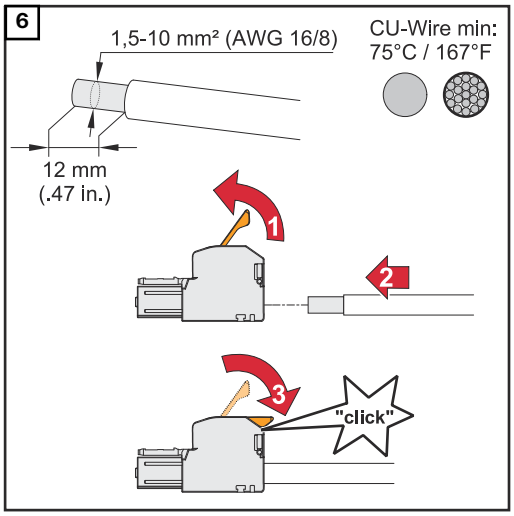

Strip the insulation of the single conductors by 12 mm.
The cable cross section must be between 1.5 mm² and 10 mm². Lift to open the terminal's operating lever and insert the stripped single conductor into the slot provided, all the way up to the stop. Then close the operating lever until it engages.

⚠ WARNING!

Danger due to individual conductors in the terminal that are loose and/or improperly connected.
This can result in serious injury and damage to property.

- ▶ Only connect one single conductor in the slot provided for each terminal.
- ▶ Check that the single conductor is held securely in the terminal.
- ▶ Ensure that all of the single conductor is within the terminal and that no individual wires are sticking out of the terminal.

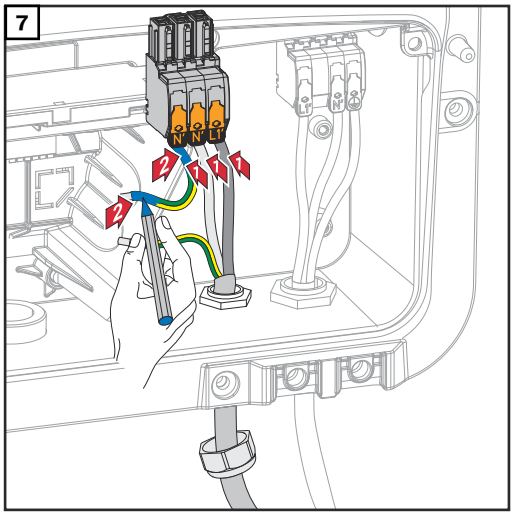

L1´ Phase conductor
N´ Neutral conductor
N´ PEN conductor

IMPORTANT!
The PEN conductor must be produced with ends that are permanently marked blue, according to the national provisions, and have a cross section of 10 mm².

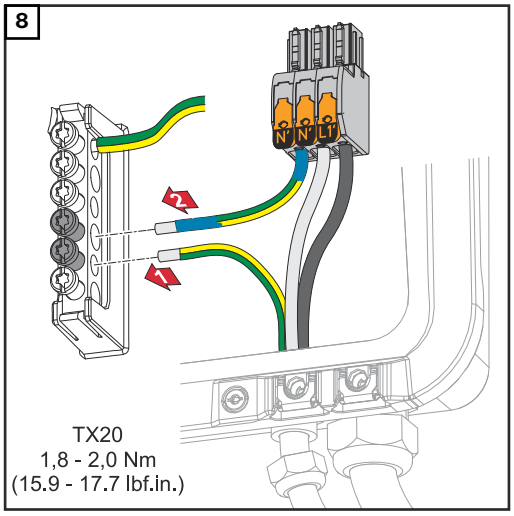

Fasten the ground conductor and PEN conductor to the ground electrode terminal using a screwdriver (TX20) and a torque of 1.8 – 2 Nm.

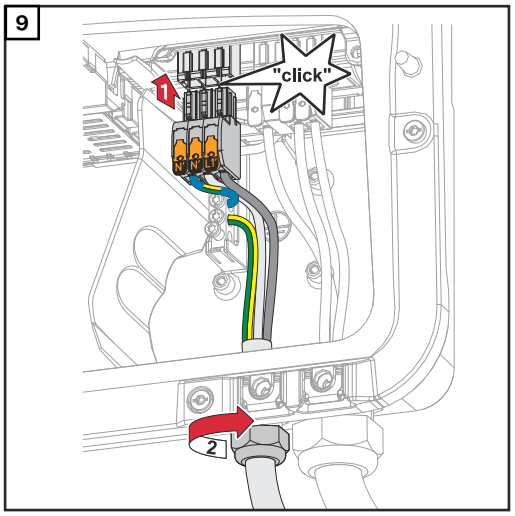

Insert the OP terminal into the OP slot until it engages. Tighten the union nut of the cable gland to the torque specified by the manufacturer.

Testing backup power mode

After the initial installation and configuration of the backup power operation, it is recommended to test the backup power operation. For test mode, a battery charge of min. 30 % is recommended.

A description on how to run test mode can be found in the **backup power checklist** (https://www.fronius.com/en/search-page, item number: 42,0426,0365).

Connecting backup power - Full Backup

Safety

⚠ WARNING!

Danger from incorrect installation, commissioning, operation or incorrect use.
This can result in severe personal injury/damage to property.

- ▶ Only trained and qualified personnel are authorised to install and commission the system, and only within the scope of the technical regulations.
- ▶ The Installation and Operating Instructions must be read carefully prior to use.
- ▶ If anything is unclear, contact your vendor immediately.

IMPORTANT!
The valid national laws, standards and provisions, as well as the specifications of the relevant grid operator are to be taken into account and applied.
It is highly recommended to coordinate the concrete examples implemented and in particular the specific installation with the grid operator to obtain their explicit approval. This obligation applies to system constructors in particular (e.g. installers).
The examples suggested here show a backup power supply with or without an external protection relay (external grid and system protection unit). Whether an external protection relay must be used or not is the decision of the respective grid operator.

IMPORTANT!
An uninterruptible power supply (UPS) may only be used to supply individual loads (e.g. computers). Feeding into the power supply of the house network is not permitted. The Installation and Operating Instructions must be read carefully prior to use. If anything is unclear, contact your vendor immediately.

The examples given in this document (in particular cabling variants and Circuit Diagrams) are suggestions only. These examples have been carefully developed and tested. They can therefore be used as a basis for real-life installation. Anyone following or using these examples does so at their own risk.

Automatic switch to backup power 1-pin separation, e.g. Austria or Australia

Circuit diagrams on page. on page .

Cabling of backup power circuit and non-backup power circuits:If not all the loads in the home need to be supplied in a backup power situation, the circuits need to be divided into backup power circuits and non-backup power circuits. The total load of the backup power circuits must not exceed the rated power of the inverter.The backup power circuits and non-backup power circuits must be fused separately according to the required safety measures (residual current circuit breaker, automatic circuit breaker, etc.)In backup power mode, only the backup power circuits are 1-pin disconnected from the grid by contactor K1. The rest of the home network is not supplied with power in this case.

The following points regarding cabling must be considered:

- The main contacts of contactor K1 must be installed between the Fronius Smart Meter and the inverter and the residual current circuit breaker of the backup power circuits.
- The supply voltage for contactor K1 is provided by the public grid and must be connected to phase 1 (L1) after the Fronius Smart Meter and fused accordingly.
- An NC contact for relay K3 interrupts the supply voltage to contactor K1. This prevents the backup power network of the inverter from being switched to the public grid.
- The NO contact of relay K3 gives feedback to the inverter on whether the locking was successfully performed by relay K3.
- Additional inverters or other AC sources can be installed in the backup power circuit after the main contacts of K1. The sources are not synchronised to the network of the inverter because this backup power network has a frequency of 53 Hz.

Automatic switch to backup power 2-pin separation, e.g. Germany, France, UK, Spain

Circuit diagrams on page. on page. on page. on page .

Cabling of backup power circuit and non-backup power circuits: If not all the loads in the home need to be supplied in a backup power situation, the circuits need to be divided into backup power circuits and non-backup power circuits. The total load of the backup power circuits must not exceed the rated power of the inverter. The emergency power circuits and non-emergency power circuits must be fused separately according to the required safety measures (residual current circuit breaker, automatic circuit breaker, etc.).In backup power mode, only the backup power circuits are all-pin disconnected from the grid by contactor K1; a ground connection is only established for these circuits. The rest of the home network is not supplied with power in this case.

The following points regarding cabling must be considered:

- The main contacts of contactor K1 must be installed between the Fronius Smart Meter and the residual-current circuit breaker of the inverter or the residual-current circuit breaker of the emergency power circuits.
- The supply voltage for contactor K1 is provided by the public grid and must be connected to phase 1 (L1) after the Fronius Smart Meter and fused accordingly.
- To ensure residual-current circuit breakers function in backup power mode, the connection between the neutral conductor and the ground conductor must be established as close as possible to the inverter, but in any case upstream of the first residual-current circuit breaker. An NC contact is used for this purpose for each of the main contacts of contactors K4 and K5. This ensures that the ground connection is established as soon as the public grid connection is no longer available.
- As with contactor K1, the supply voltage for contactors K4 and K5 is provided via phase 1 (L1) of the public grid.
- An NC contact for relay K3 interrupts the supply voltage to contactors K1, K4 and K5. This prevents the ground connection from being immediately disconnected again when power returns to the public grid and the backup power network of the inverter from being switched to the public grid.
- The NO contact of relay K3 gives feedback to the inverter on whether the locking was successfully performed by relay K3.
- Additional inverters or other AC sources can be installed in the backup power circuit after the main contacts of K1. The sources are not synchronised to the network of the inverter because this backup power network has a frequency of 53 Hz.
- A Fronius Smart Meter with current transformer is required for the UK (e.g. Fronius Smart Meter 50kA-3 or Fronius Smart Meter TS 5kA-3).

Automatic switch to backup power 2-pin double separation with ext. grid and system protection - e.g. Italy

Circuit diagram on page .

Cabling for backup power circuit and non-backup power circuits:IMPORTANT! Fronius Smart Meter US-240 must be used for these circuit variants.The backup power circuits and non-backup power circuits must be fused separately according to the required safety measures (residual current circuit breaker, automatic circuit breaker, etc.)In backup power mode, only the backup power circuits are disconnected from the grid by contactors K1 and K2; an earth connection is only established for these circuits. The rest of the home network is not supplied with power in this case.

The following points regarding cabling must be considered:

- The main contacts of contactors K1 and K2 must be installed between the Fronius Smart Meter and the residual-current circuit breaker of the inverter and the residual-current circuit breaker of the backup power circuits.
- The supply voltage for contactors K1 and K2 is provided by the public grid and must be connected to phase 1 (L1) downstream of the Fronius Smart Meter and fused accordingly.
- Actuation of contactors K1 and K2 is carried out by the external grid and system protection unit.
- The external grid and system protection unit must be installed downstream of the Fronius Smart Meter. Precise installation and wiring instructions for the external grid and system protection unit can be found in its separate Operating Instructions.
- The remote trip input of the external grid and system protection unit must be set to NC according to the manufacturer's Operating Instructions.
- To ensure residual-current circuit breakers function in backup power mode, the connection between the neutral conductor and the ground conductor must be established as close as possible to the inverter, but in any case upstream of the first residual-current circuit breaker. An NC contact is used for this purpose for the main contacts of contactors K4 and K5. This ensures that the ground connection is established as soon as the public grid connection is no longer available.
- The supply voltage for contactors K1, K2, K4 and K5 is provided via phase 1 (L1) of the public grid and is switched via the external grid and system protection unit.
- An NC contact for relay K3, which activates the remote input of the external grid and system protection unit, interrupts the supply voltage to contactors K1, K2, K4 and K5. This prevents the ground connection from being immediately disconnected again when power returns to the public grid and the backup power network of the inverter from being switched to the public grid.
- The NO contact of relay K3 gives additional feedback to the inverter on whether the locking was successfully performed by relay K3.
- Additional inverters or other AC sources can be installed in the backup power circuit downstream of the main contacts of K1 and K2. The sources are not synchronised to the network of the inverter because this backup power network has a frequency of 53 Hz.

Manual switch to backup power 1-pin separation, e.g. Australia / 2-pin separation, e.g. Germany

Circuit diagrams on page. on page .

IMPORTANT!The Circuit Diagrams to be used are to be applied depending on the country standard and implementation regulations of the grid operator.

Cabling of backup power circuit and non-backup power circuits If not all the loads in the home need to be supplied in a backup power situation, the circuits need to be divided into backup power circuits and non-backup power circuits. The total load of the backup power circuit must not exceed the rated power of

the inverter.The backup power circuits and non-backup power circuits must be fused separately according to the required safety measures (residual current circuit breaker, automatic circuit breaker, etc.).In backup power mode, only the backup power circuits and inverter are disconnected from the grid by the changeover switch Q1. In the case of two-pin separation, an additional earth connection is established. In this case, the loads in the non-backup circuit are not supplied by the inverter.

The following points regarding installation must be considered

- The changeover switch Q1 must be dimensioned for the fuses installed upstream, the max. occurring amperage and the max. occurring short circuit current. An auxiliary switching element with two NO contacts is required for switch position 1 (grid operation) to match the installed Q1 changeover switch.The Q1 switch used must fulfil a short-circuit breaking capacity of at least 10kA according to the standard IEC 60947-1. If the short circuit current at the installation point reaches a value above 10kA, a switch with an appropriate short-circuit breaking capacity must be used.
- The circuit is to be used exclusively in household applications and installations (small trade and agriculture) or up to upstream fuses with a nominal current of 63A.
- Min. impulse withstand voltage of the changeover switch of 4kV according to IEC 60947-1.
- Whether 1-pin or 2-pin separation is to be used must be clarified with the grid operator.
- The protective measure must be tested regularly; if this is not regulated by law, it must be performed annually.
- Data transfer between the Fronius Smart Meter and the inverter may be interrupted in backup power mode (switch position 2). This is optionally ensured via a contact of the changeover switch. Interrupting the Smart Meter connection is optional and prevents the backup power function from ending when the public grid returns. If this does not take place, the inverter interrupts the backup power supply when the public grid returns. Failure to manually switch to grid-parallel operation within the first 10 minutes of the public grid returning may cause the inverter and battery to shut down. In this case, a manual system start must be carried out. (See chapter on page). This behaviour must be taken into account especially during a test of the manual switchover, because the inverter does not start backup power mode due to the existing Smart Meter data when the grid connection is established.
- The data communication connection with the Fronius Smart Meter must be established separately from the battery to its dedicated Modbus input so that battery data communication is maintained. (See chapter on page).
- Feedback to the digital inputs (IOs) of the inverter via the changeover switch Q1 (switch position 2), is a start condition for the inverter's backup power mode.
- The AC output of the inverter is de-energised when switching over via switch position 0. This is ensured by interrupting the WSD line with 2 contacts of the changeover switch Q1 in position 0.
- The continuous connection between the equipotential bonding rail and the neutral conductor from the inverter must not be interrupted in the case of 1-pin separation.
- In the case of 2-pin separation, the PE-N conductor connection is established via the main contacts of the changeover switch Q1 in a double version.
- Additional inverters or other AC sources can be installed in the backup power circuit after the changeover switch Q1. The sources will not synchronise to the inverter's backup power network in case of backup power because this is operated at 53 Hz.

Testing backup power mode

After the initial installation and configuration of the backup power operation, it is recommended to test the backup power operation. For test mode, a battery charge of min. 30 % is recommended.

A description on how to run test mode can be found in the **backup power checklist** (https://www.fronius.com/en/search-page, item number: 42,0426,0365).

Connecting the data communication cable

Modbus participants

The inputs M0 and M1 can be selected for this purpose. A maximum of 4 Modbus participants can be connected to the Modbus terminal on inputs M0 and M1.

IMPORTANT!
Only one primary meter, one battery and one Ohmpilot can be connected per inverter. Due to the high data transfer of the battery, the battery occupies 2 participants. If the **"Inverter control via Modbus"** function is activated in the **"Communication"** → **"Modbus"** menu, no Modbus participants are possible. It is not possible to send and receive data at the same time.

Example 1:

Input	Battery	Fronius Ohmpilot	Quantity Primary meter	Quantity Secondary meter
Modbus 0 (M0)	✗	✗	0	4
	✓	✗	0	2
	✓	✓	0	1
Modbus 1 (M1)	✗	✗	1	3

Example 2:

Input	Battery	Fronius Ohmpilot	Quantity Primary meter	Quantity Secondary meter
Modbus 0 (M0)	✗	✗	1	3
Modbus 1 (M1)	✗	✗	0	4
	✓	✗	0	2
	✓	✓	0	1

Routing data communication cables

IMPORTANT!
If data communication cables are wired into the inverter, observe the following points:

- Depending on the number and cross section of the wired data communication cables, remove the corresponding blanking plugs from the sealing insert and insert the data communication cables.
- Make sure that you insert the corresponding blanking plugs into any free openings on the sealing insert.

IMPORTANT!
Should the blanking plugs be missing or improperly fitted, then safety class IP66 cannot be guaranteed.

1

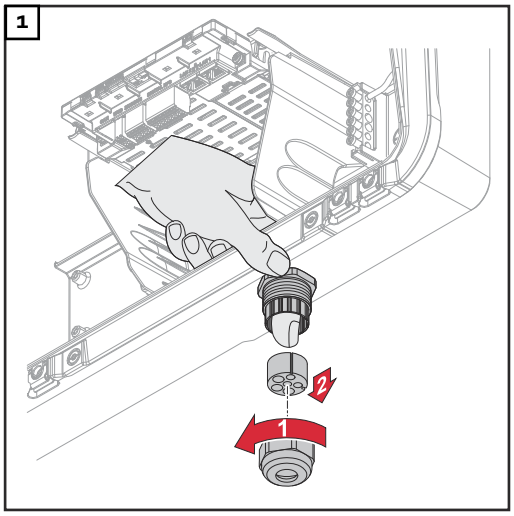

Undo the cable gland union nut and push out the sealing ring and the blanking plug from the inside of the device.

2

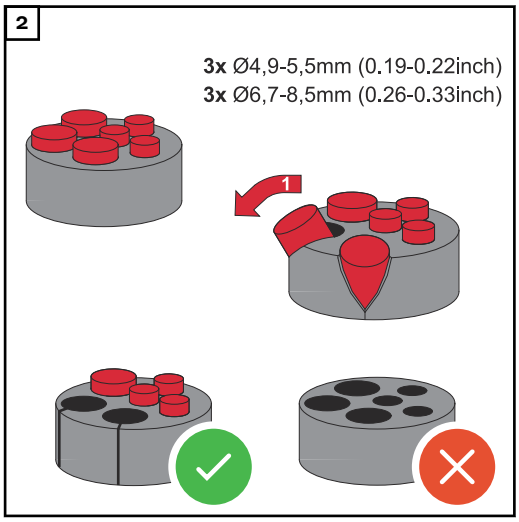

Open up the sealing ring at the location where the blanking plug is to be removed.

* Liberate the blanking plug by moving it sideways.

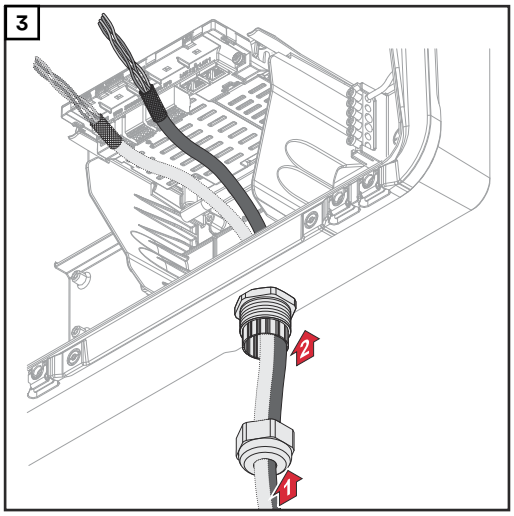

Guide the data cables first through the cable gland union nut and then through the housing opening.

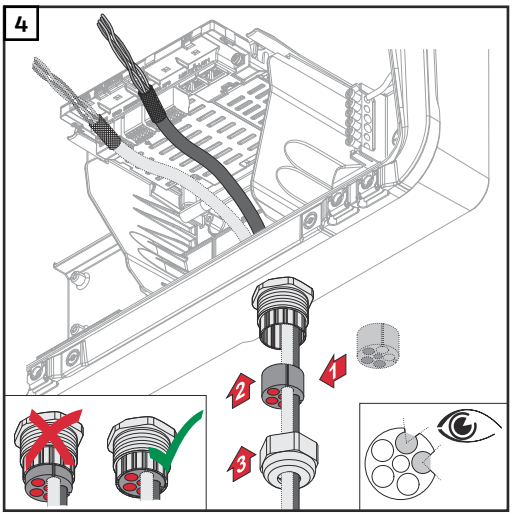

Insert the sealing ring between the union nut and the housing opening. Press the data cables into the seal's cable guide. Then press in the seal until it reaches the underside of the cable gland.

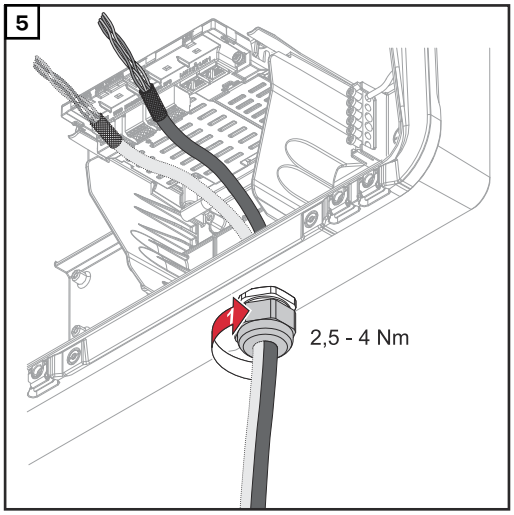

Tighten the union nut for the cable gland to a torque of min. 2.5 to max. 4 Nm.

Connecting the battery communication cable

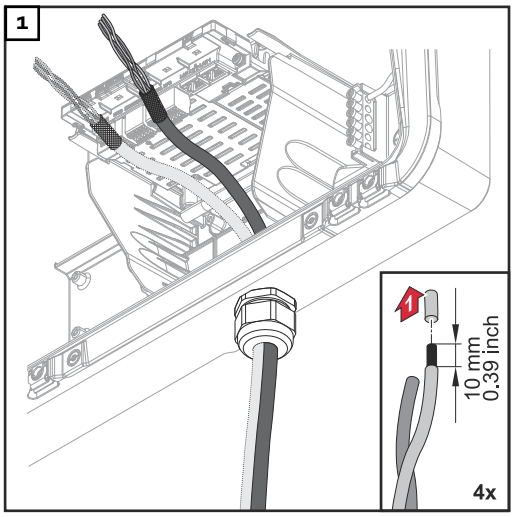

Strip 10 mm from the single conductors and mount the ferrules if necessary.

IMPORTANT!
Connect the individual conductors to an appropriate ferrule if several individual conductors are connected to one input of the push-in terminals.

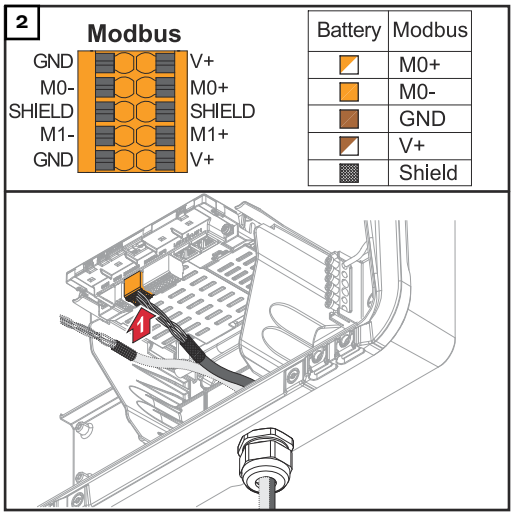

Insert the cable into the respective slot and check the cable is securely retained.

IMPORTANT!
Use only twisted pairs for connecting "Data +/-" and "Enable +/-", see **Permissible cables for the data communication connection** on page **68**.

Twist the cable shield and insert into the "SHIELD" slot.

IMPORTANT!
Improperly fitted shielding can cause data communication problems.

For the wiring proposal recommended by Fronius, see page **195**.

Terminating resistors

It may be possible for the system to function without terminating resistors. However, owing to interference, the use of terminating resistors according to the following overview is recommended for trouble-free functioning.

For permissible cable and max. distances for the data communication range see chapter **Permissible cables for the data communication connection** on page **68**.

IMPORTANT!
Terminating resistors that are not positioned as illustrated can result in interference in the data communication.

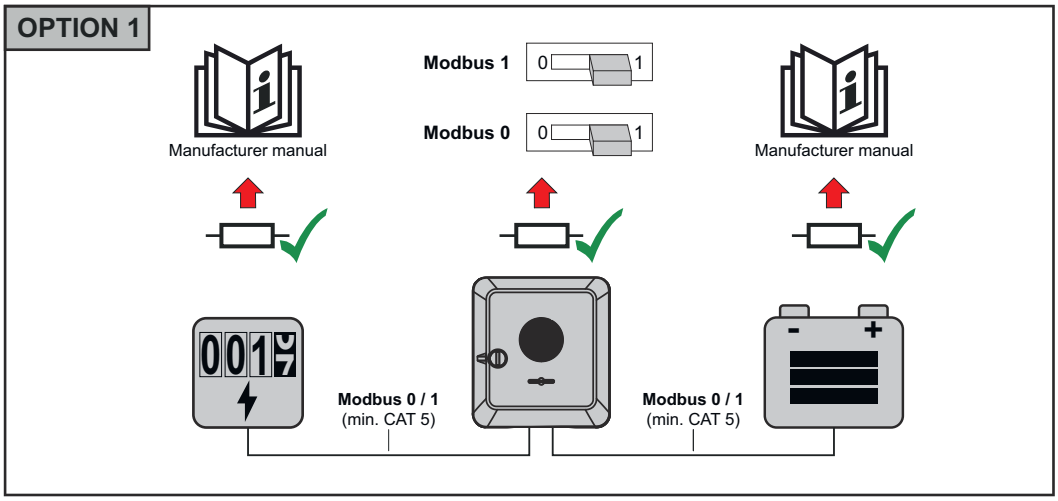
OPTION 1
Manufacturer manual
Modbus 1
0
1
Modbus 0
0
1
Manufacturer manual
Modbus 0 / 1
(min. CAT 5)
Modbus 0 / 1
(min. CAT 5)

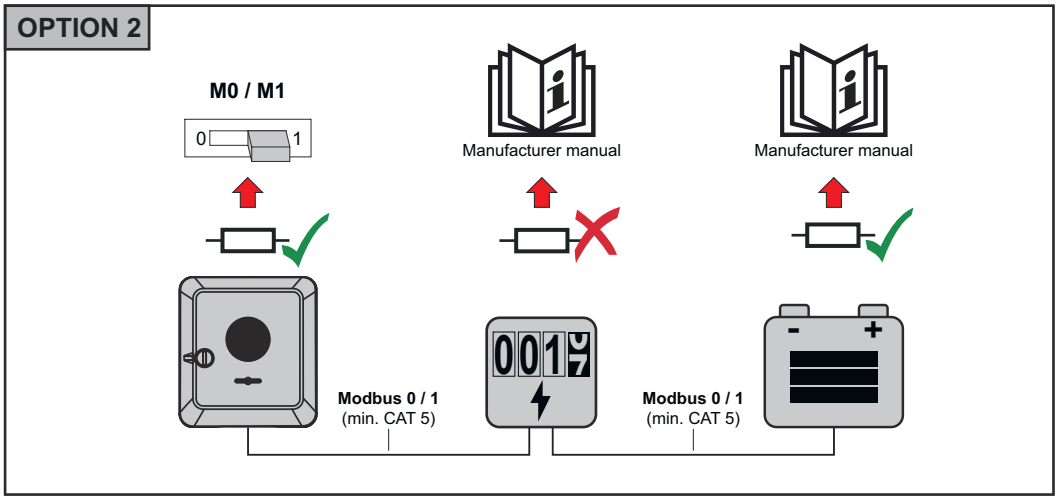
OPTION 2
M0 / M1
0
1
Manufacturer manual
Manufacturer manual
Modbus 0 / 1
(min. CAT 5)
Modbus 0 / 1
(min. CAT 5)

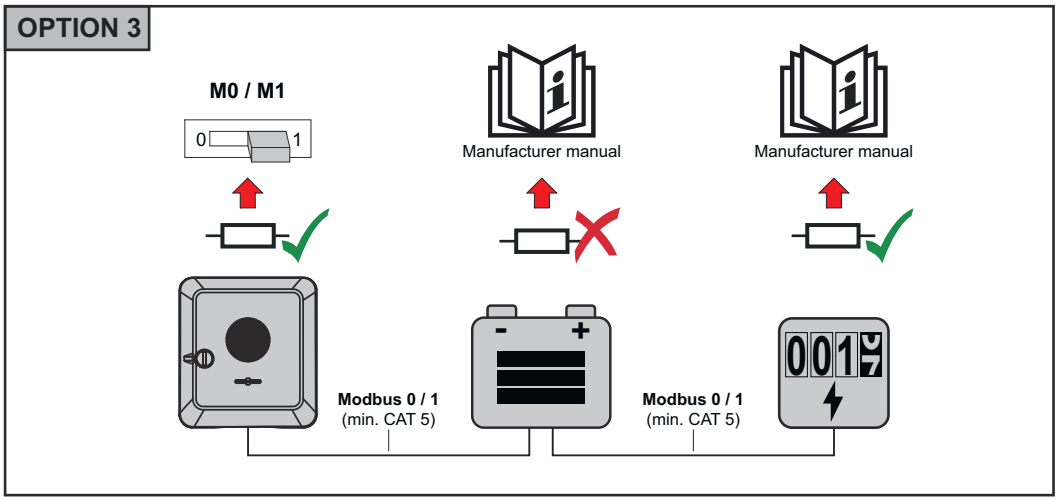
OPTION 3
M0 / M1
0
1
Manufacturer manual
Manufacturer manual
Modbus 0 / 1
(min. CAT 5)
Modbus 0 / 1
(min. CAT 5)

Installing the WSD (wired shutdown)

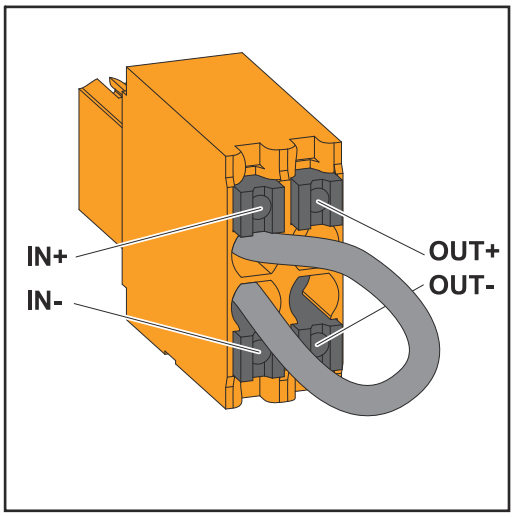

IMPORTANT!
The push-in WSD terminal in the inverter's connection area is delivered with a bypass ex works as standard. The bypass must be removed when installing a trigger device or a WSD chain.

The WSD switch of the first inverter with connected trigger device in the WSD chain must be in position 1 (primary device). The WSD switch of all other inverters should be in the 0 (secondary device) position.

Max. distance between 2 devices: 100 m
Max. number of devices: 28

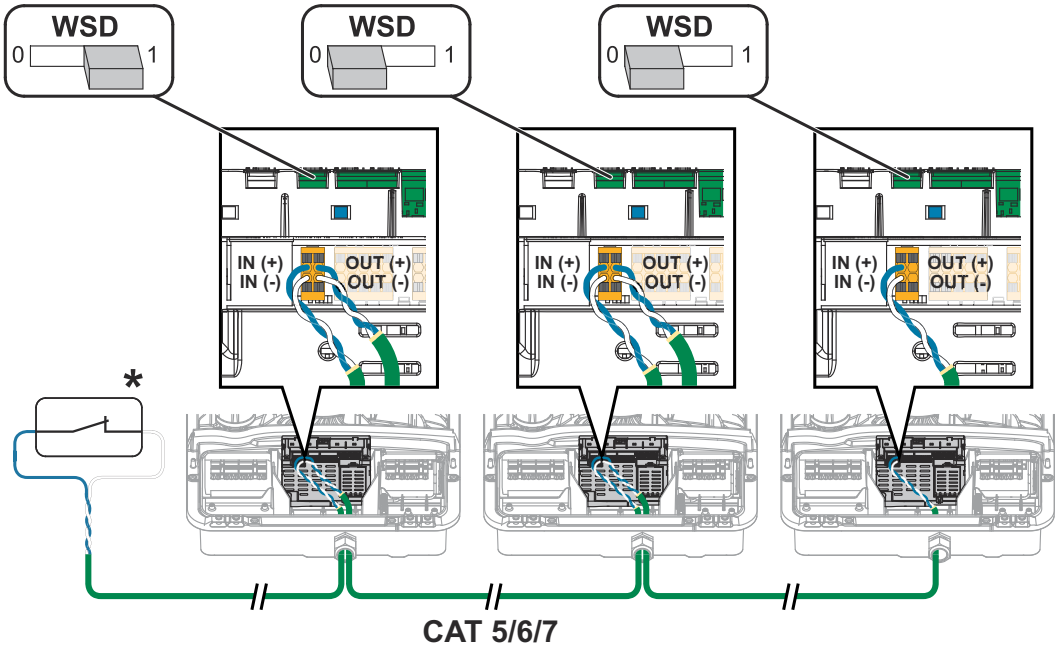

* Floating contact of the trigger device (e.g. central grid and system protection). If several floating contacts are used in a WSD chain, they must be connected in series.

Closing and commissioning the inverter

Closing the inverter's connection area/housing cover, and commissioning

NOTE!

The housing cover is fitted with a lock for safety reasons, which allows the housing cover on the inverter to be pivoted only when the DC disconnector is switched off.

- ▶ Only clip and pivot the housing cover onto the inverter when the **DC disconnector is switched off**.
- ▶ Do not use excessive force to clip in and pivot the housing cover.

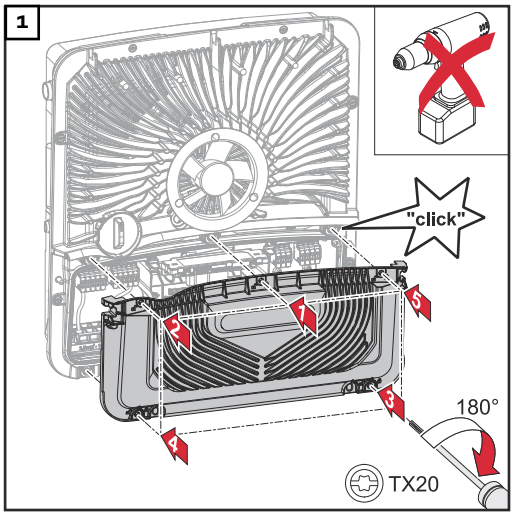

Place the cover on the connection area. Tighten the five screws by rotating them 180° to the right in the indicated order using a screwdriver (TX20).

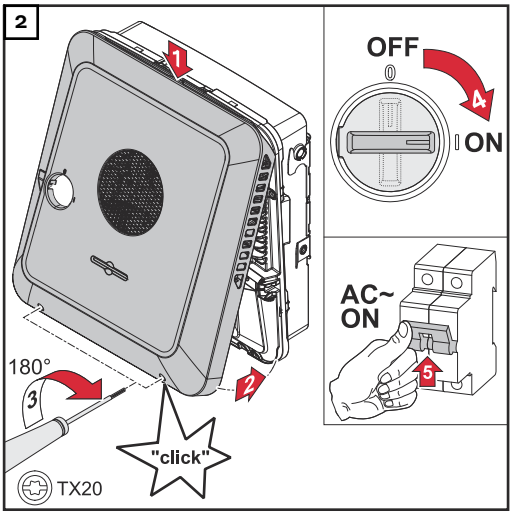

Clip the housing cover in at the top of the inverter.
Press on the lower part of the housing cover and tighten the two screws 180° to the right using a Torx screwdriver (TX20).
Turn the DC disconnector to the "On" switch position. Switch on the automatic circuit breaker. For systems with a battery, observe the switch-on sequence as per chapter **Suitable batteries** on page **26**.

IMPORTANT! Open WLAN Access Point with the optical sensor, see chapter **Button functions and LED status indicator** on page **35**

Starting the inverter for the first time

When starting the inverter for the first time, various setup settings must be configured.

If the setup process is cancelled before the process is complete, any data that has been input up to this point is lost and the start screen with the installation wizard is shown again. If the process is interrupted, such as in the event of a power outage, the data is saved. Commissioning may be continued from the point at which the process was interrupted once the power supply has been restored. If the setup was interrupted, the inverter feeds energy into the grid at maximum 500 W and the operating status LED flashes yellow.

The country setup can only be set when starting the inverter for the first time. If the country setup needs to be changed at a later date, please contact your installer / Technical Support team.

Installation with the app

The "Fronius Solar.start" app is required for this installation method. Depending on the end device with which the installation will be carried out, download the app for the respective platform.

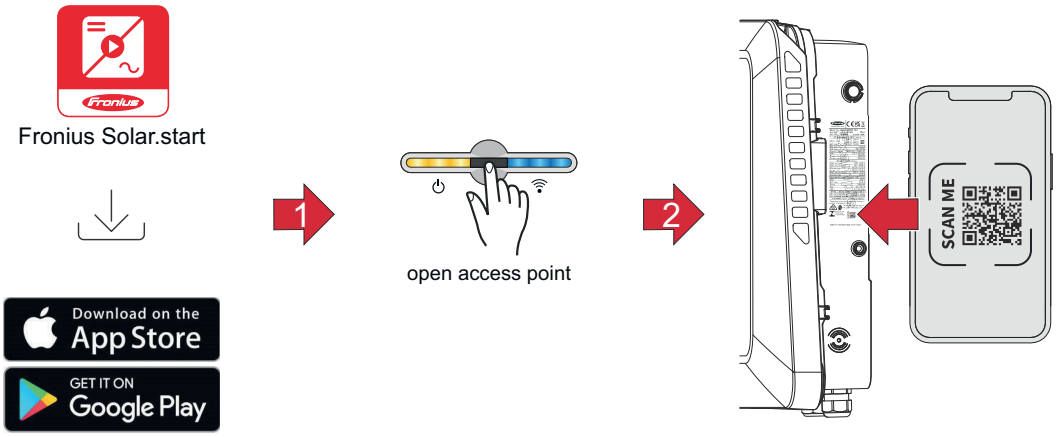

1 Download and install the Fronius Solar.start app.

2 Open the access point by touching the sensor

✓ *Communication LED flashes blue.*

3 Open the Solar.start app and follow the installation wizard. Scan the QR code on the rating plate with a smartphone or tablet to connect to the inverter.

4 Add system components in Solar.web and start up the PV system.

The network wizard and the product setup can be carried out independently of each other. A network connection is required for the Solar.web installation wizard.

Installation using the web browser

WLAN:

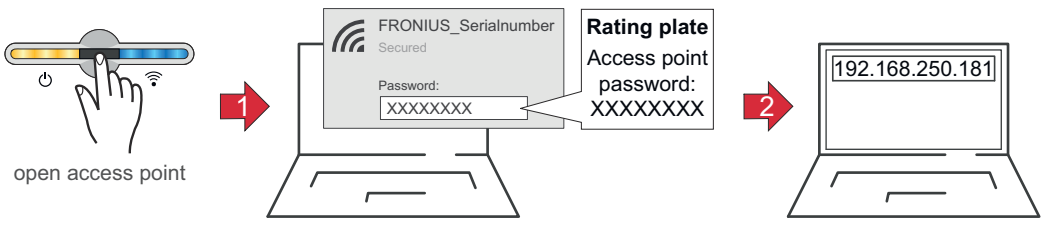

1 Open the access point by touching the sensor

✓ *Communication LED flashes blue.*

2 Establish the connection to the inverter in the network settings (the inverter is displayed with the name "FRONIUS_" and the serial number of the device).

3 Enter the password from the rating plate and confirm.
IMPORTANT!
To enter the password on a Windows 10 operating system, the link "Connect using a security key instead" must first be activated to establish a connection with the password.

4 In the browser address bar, enter and confirm the IP address 192.168.250.181. The installation wizard is opened.

5 Follow the installation wizard in the individual sections and complete the installation.

6 Add system components in Solar.web and start up the PV system.

The network wizard and the product setup can be carried out independently of each other. A network connection is required for the Solar.web installation wizard.

Ethernet:

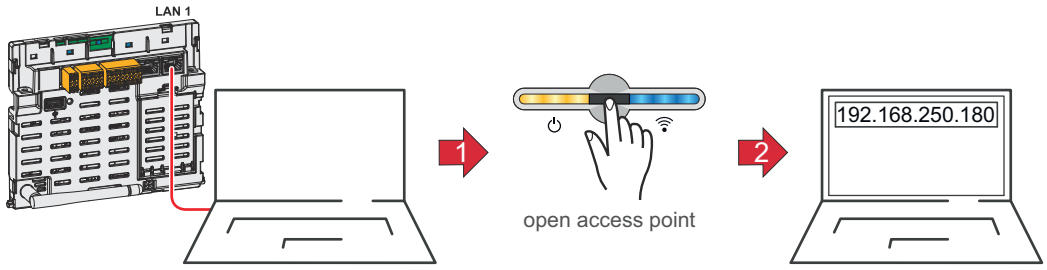

1 Establish a connection to the inverter (LAN1) with a network cable (CAT5 STP or higher).

2 Open the access point by touching the sensor once

✓ *Communication LED flashes blue.*

3 In the browser address bar, enter and confirm IP address 169.254.0.180. The installation wizard is opened.

4 Follow the installation wizard in the individual sections and complete the installation.

5 Add system components in Solar.web and start up the PV system.

The network wizard and the product setup can be carried out independently of each other. A network connection is required for the Solar.web installation wizard.

Switching off current supply and restarting the inverter

De-energising the inverter and switching it on again

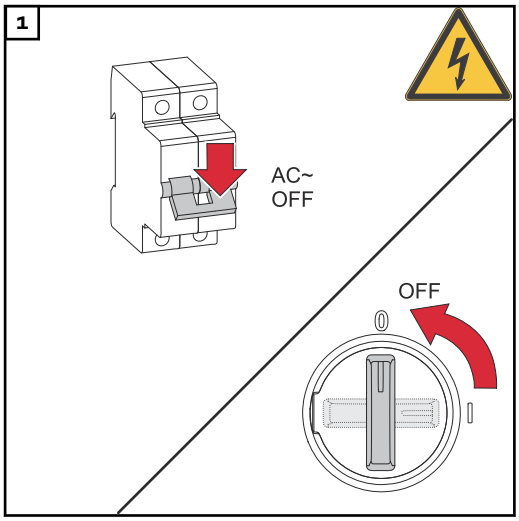

1. Turn off the automatic circuit breaker.
2. Turn the DC disconnector to the "Off" switch position.

To start up the inverter again, follow the steps listed above in reverse order.

Settings - user interface of the inverter

User settings

User login

1. Open the user interface of the inverter in your browser.
2. In the **"Login"** menu, log in using your user name and password, or go to the **"User"** menu and click on the **"User login"** button and then log in with your user name and password.

IMPORTANT!
Depending on the user's authorization, settings can be executed in the individual menus.

Selecting the language

1. In the **“User”** menu, click on the **“Language”** button and select the desired language.

Device configuration

Components

Select **"Add component+"** to add all available components to the system.

PV generator
Activate the MPP tracker and enter the connected PV power in the associated field. For combined solar module strings, "PV 1 + PV 2 connected in parallel" must be activated.

Battery
If the SoC mode is set to "Automatic", the values "Minimum SoC" and "Maximum SoC" are preset according to the technical specifications of the battery manufacturer.

If the SoC mode is set to "Manual", the values "Minimum SoC" and "Maximum SoC" may be changed after consultation with the battery manufacturer within the scope of their technical specifications. In the event of a power outage requiring backup power, the set values are not taken into account.

Using the "Allow battery charging from additional producers in home network" setting, charging of the battery from other external producers is enabled/disabled.

Using the "Allow battery charging from public grid" setting, charging of the battery from the public grid is enabled/disabled.
The normative or feed-in tariff rules must be taken into account with this setting. The setting does not affect the charging of the battery by other producers within the home. It merely relates to the process of drawing charging energy from the public grid. Regardless of this setting, any charging from the public grid that is required for service reasons (e.g. necessary re-charging to protect against deep discharge) is still performed.

IMPORTANT!
Fronius accepts no liability for damage to third-party batteries.

Primary meter
To ensure smooth operation in conjunction with other energy producers and in Full Backup backup power mode, it is important to install the Fronius Smart Meter at the feed-in point. The inverter and other producers must be connected to the public grid via the Fronius Smart Meter.
This setting also affects the behaviour of the inverter at night. If the function is deactivated, the inverter switches to Standby mode as soon as there is no more PV power available, provided that no energy management command is sent to the battery (e.g. minimum state of charge reached). The message "Power low" is displayed. The inverter restarts as soon as an energy management command is sent or sufficient PV power is available.
If the function is activated, the inverter remains permanently connected to the grid so that energy can be drawn from other producers at any time.
After connecting the meter, the position must be configured. A different Modbus address needs to be set for each Smart Meter.
The Watt value on the generator meter is the sum of all generator meters. The Watt value on the consumption meter is the value of all secondary meters.

Ohmpilot
All Ohmpilots available in the system are displayed. Select the desired Ohmpilot and add it to the system via "Add".

Functions and I/Os

Backup power
"Off", "PV Point" or "Full Backup" can be selected for backup power mode. **"Full Backup"** backup power mode can only be activated once the required I/O assignments have been configured for backup power. In addition, a meter must be mounted and configured at the feed-in point for **"Full Backup"** backup power mode.

IMPORTANT!
When configuring "PV Point" backup power mode, the information in chapter **Safety** on page **85** must be observed.
When configuring "Full Backup" backup power mode, the information in chapter **Safety** on page **90** must be observed.

Backup power nominal voltage
When backup power mode is activated, the nominal voltage of the public grid must be selected.

State of charge warning limit
A warning is output when the residual capacity of the battery specified here is reached in backup power mode.

Reserve capacity
The set value results in a residual capacity (depending on the capacity of the battery) that is reserved for backup power. The battery is not discharged below the residual capacity in grid-connected operation. In backup power mode, the manually set value **"Minimum SoC"** is not taken into account. If there is a power outage, the battery is always discharged down to the automatically preset minimum SoC in accordance with the technical specifications of the battery manufacturer.

Load management
Up to 4 pins can be selected for load management here. Additional load management settings are available in the "**Load management**" menu item.
Default: Pin 1

Australia - Demand Response Mode (DRM)
The pins for control via DRM can be set here:

Mode	Description	Information	DRM pin	I/O pin
DRM0	Inverter disconnects itself from the grid	DRM0 occurs if there is an interruption or short circuit on the REF GEN or COM LOAD leads, or if the combinations DRM1 - DRM8 are invalid. The mains relays open.	REF GEN COM LOAD	IO4 IO5
DRM1	Import $P_{nom} \leq 0\%$ without disconnection from the grid	currently not supported	DRM 1/5	IN6
DRM2	Import $P_{nom} \leq 50\%$	currently not supported	DRM 2/6	IN7
DRM3	Import $P_{nom} \leq 75\%$ & $+Q_{rel}^{*} \geq 0\%$	currently not supported	DRM 3/7	IN8
DRM4	Import $P_{nom} \leq 100\%$	currently not supported	DRM 4/8	IN9

Mode	Description	Information	DRM pin	I/O pin
DRM5	Export P_{nom} ≤ 0% without disconnection from the grid	currently not supported	DRM 1/5	IN6
DRM6	Export P_{nom} ≤ 50%	currently not supported	DRM 2/6	IN7
DRM7	Export P_{nom} ≤ 75% & $-Q_{rel}$* ≥ 0%	currently not supported	DRM 3/7	IN8
DRM8	Export P_{nom} ≤ 100%	currently not supported	DRM 4/8	IN9

The percentages always refer to the nominal device output.

IMPORTANT!
If the Demand Response Mode (DRM) function is enabled and no DRM control is connected, the inverter switches to Standby mode.

Demand Response Modes (DRM)

Here you can enter a value for the apparent power input and the apparent power output for the Australia country setup.

Inverter

"Enforce Standby"
When the function is activated, the feed-in mode of the inverter is interrupted. This enables a powerless shutdown of the inverter and protects its components. When the inverter is restarted, the standby function is automatically deactivated.

"PV 1" and **"PV 2"**

Parameter	Value range	Description
"Mode"	Off	The MPP tracker is deactivated.
	Auto	The inverter uses the voltage at which the max. possible power of the MPP tracker is possible.
	Fix	The MPP tracker uses the voltage defined in the **"UDC fix"**.
"UDC fix"	80 - 530 V	The inverter uses the fixed preset voltage used at the MPP tracker.
"Dynamic Peak Manager"	Off	The function is deactivated.
	On	The entire solar module string is checked for optimisation potential and determines the best possible voltage for feed-in mode.

"Ripple Control"
Ripple control signals are signals sent out by the energy company to switch controllable loads on and off. Depending on the installation situation, ripple control

signals may be attenuated or amplified by the inverter. The settings below can be used to counteract this if necessary.

Parameter	Value range	Description
"Reduction of Influence"	Off	The function is deactivated.
	On	The function is activated.
"Frequency of Ripple Control Signal"	100 - 3000 Hz	The frequency specified by the energy company must be entered here.
"Grid Inductance"	0.00001 - 0.005 H	The value measured at the feed-in point must be entered here.

"Measures against RCD/RCMU false triggers"
(when using a 30 mA residual current circuit breaker)

NOTE!

The national regulations of the grid operator or other factors may require a residual current circuit breaker in the AC connection lead.
For this situation, a type A residual-current circuit breaker is generally adequate. Nevertheless, false alarms can be triggered for the type A residual-current circuit breaker in individual cases and depending on local conditions. For this reason, in accordance with national legislation, Fronius recommends that a residual-current circuit breaker with a tripping current of at least 100 mA suitable for frequency converters be used.

Parameter	Value range	Description
"Switch-Off before 30mA RCD Trip"	0	No measures to prevent false tripping.
	1	The inverter switches off at 15 mA before the residual-current circuit breaker trips.
"Leakage current factor to reduce RCMU/RCD false trips" (only for Symo GEN24)	0 - 0.25 (default: 0.16)	Reducing the setting value reduces the leakage current and raises the intermediate circuit voltage, which slightly reduces the efficiency. Setting value 0.16 enables optimum efficiency.

"Iso Warning"

Parameter	Value range	Description
"Iso Warning"	Off	The isolation warning is deactivated.
	On	The isolation warning is activated. A warning is issued in the event of an isolation fault.

Parameter	Value range	Description
"Iso Alternative Mode"	Accurate	Isolation monitoring is performed with the highest accuracy and the measured insulation resistance is displayed on the user interface of the inverter.
	Fast	Isolation monitoring is performed with lower accuracy, which shortens the duration of the isolation measurement, and the isolation value is not displayed on the user interface of the inverter.
"Isolation Warning Threshold"	100,000 - 10,000,000 Ω	If this threshold is undershot, status code 1083 is displayed on the user interface of the inverter.

"Backup Power"

Parameter	Value range	Description
"Backup Nominal Voltage"	220 - 240 V	Is the nominal phase voltage output in backup power mode.
"Backup Undervoltage Protection Limit U< [pu]"	0 - 2 %V	The setting value is used to set the limit value for switching off backup power mode, e. g. setting value 0.9 = 90% of the nominal voltage.
"Backup Undervoltage Protection Time U<"	0.04 - 20 s	Triggering time for falling below the backup power undervoltage protection limit value.
"Backup Overvoltage Protection Limit U> [pu]"	0 - 2 %V	The setting value is used to set the limit value for switching off backup power mode, e. g. setting value 1.1 = 110% of the nominal voltage.
"Backup Overvoltage Protection Time U>"	0.04 - 20 s	Triggering time for exceeding the backup power overvoltage protection limit value.
"Backup Restart Delay"	0 - 600 s	Is the waiting time for resumption of backup power mode after a shutdown.
"Backup Restart Attempts"	1 - 10	Is the max. number of automatic restart attempts. When the max. number of automatic restart attempts is reached, the service message 1177 must be acknowledged manually.
"Backup External Frequency Check" (Italy only)	Off	The function is deactivated
	On	For backup power mode (Full Backup) in Italy, the external frequency check must be activated. Before ending backup power mode, the grid frequency is checked. When the grid frequency is in the allowed limit range, the loads are connected to the public grid.
"Backup Short Circuit Trip Time"	0.001 - 60 s	If a short circuit occurs in backup power mode, this mode is interrupted within the set time.

Energy management

Maximum permitted battery charging from the public grid

New rules for charging batteries will apply in Germany from 1 January 2024. The maximum charging power from public grids is 4.2 kW when controlled in accordance with Section 14a of the EnWG (Law on the Fuel and Electricity Industries). The inverter must establish a connection to Solar.web for documentation purposes and be permanently connected to the internet in order to be able to prove the implementation of the external control commands.
The charging power is limited to a value below this by default. Make sure not to use more than the allowed 4.2 kW charging power.

Energy management

"Self-Consumption Optimization"
Set the operating mode to **"Manual"** or **"Automatic"**. The inverter always regulates to the set **"Target Value at Feed-In Point"**. In the **"Automatic"** operating mode (factory setting), an adjustment is made to 0 W at the feed-in point (maximum self-consumption).

The "Target Value at Feed-In Point" also applies if a further source feeds into this Smart Meter. However, in this case:
- The Fronius Smart Meter must be installed and configured at the feed-in point.
- The **"Allow battery charging from additional producers in home network"** function must be activated in the **"Components"** → **"Battery"** menu area.

"Target Value at Feed-In Point"
If "Manual" has been selected under Self-Consumption Optimization, the **"Operating Mode"** (**"Consumption"**/**"Feed-In"**) and the **"Target Value at Feed-In Point"** can be set.

IMPORTANT!
"Self-Consumption Optimization" has lower priority than **"Battery Management"**.

External producers (only possible with active battery)
If further decentralised producers are installed in the house, and these are incorporated into the self-consumption control of the Fronius Hybrid inverter, the setting **"Allow battery charging from additional producers in home network"** must be activated in the menu area **"Device Configuration"** → **"Components"** (see **Components** on page **108**
.This means that energy can be drawn from the home network and fed into the battery via the Fronius inverter (battery support required). You can restrict how much power is consumed by the Fronius inverter by specifying the maximum AC power (AC max.). A maximum power consumption of the AC rated power of the Fronius inverter is possible.

"Battery Management"
Using the time-dependent battery control, it is possible to prevent or restrict charging/discharging of the battery and to specify a defined charging power.

Battery management is influenced by the following settings, for example:
- Permitted battery charging from the public grid
- Power limitation of the inverter, energy storage device or overall system
- Control specifications via Modbus
- Self-consumption optimization

IMPORTANT!
The defined rules for battery control have the second lowest priority after Self-

Consumption Optimization. Depending on the configuration, the rules may not be satisfied due to other settings.

The following values can be selected for the rules of the time-dependent battery control:

- **"Max. charging power"**
  The battery is charged to the maximum level with the value set in the "**Power**" input field.
  If no feed-in to the public grid and/or direct consumption in the house is possible, the set "**Max. charging power**" value is ignored and the energy generated is charged into the battery.
- **"Min charging power"**
  The battery is charged as a minimum by the value set in the input field "**Power**".
- **"Max discharge power"**
  The battery is discharged at most by the value set in the input field "**Power**".
- **"Min discharge power"**
  The battery is discharged as a minimum by the value set in the input field "**Power**".

The timing for when the rule applies is set in the **"Time"** input fields and by selecting the relevant "**Weekdays**".

It is not possible to define a time window over midnight (00:00).
Example: To set a control from 22:00 to 06:00, two inputs are required: "22:00 - 23:59" and "00:00 - 06:00".

Examples - Time-dependent battery control

The examples below serve to explain the energy flows. Efficiency levels are not taken into account.

Example: Battery system	
PV system available power	1000 W
Power into the battery	500 W
Power output (AC) of the inverter	500 W
Target value set at feed-in point	0 W
Infeed into the public grid	0 W
Consumption in home	500 W

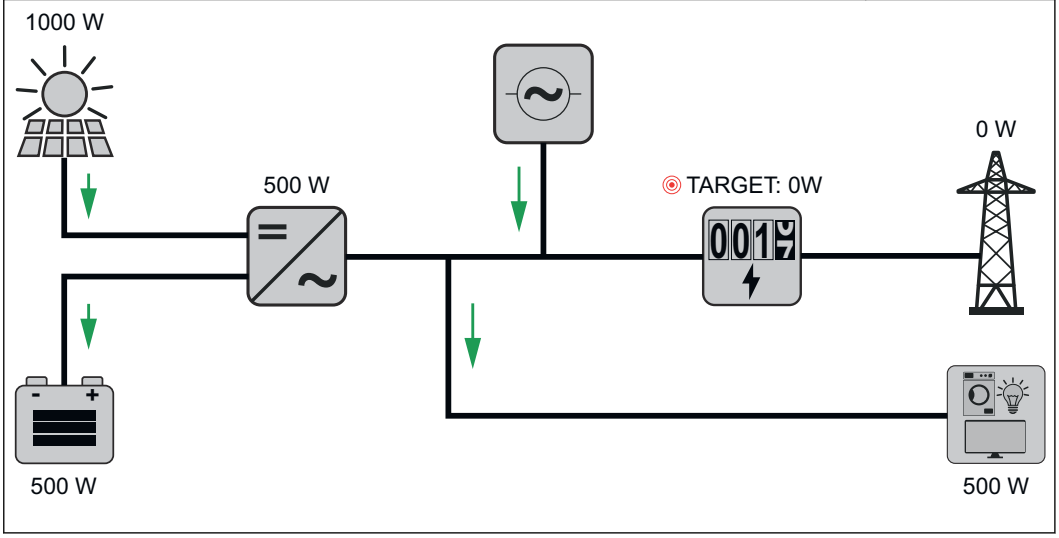

Example: Battery system without photovoltaics, including second producer in the house	
Power into the battery	1500 W
Power consumption (AC) of the inverter	1500 W
Second producer in home network	2000 W
Target value set at feed-in point	0 W
Infeed into the public grid	0 W
Consumption in home	500 W

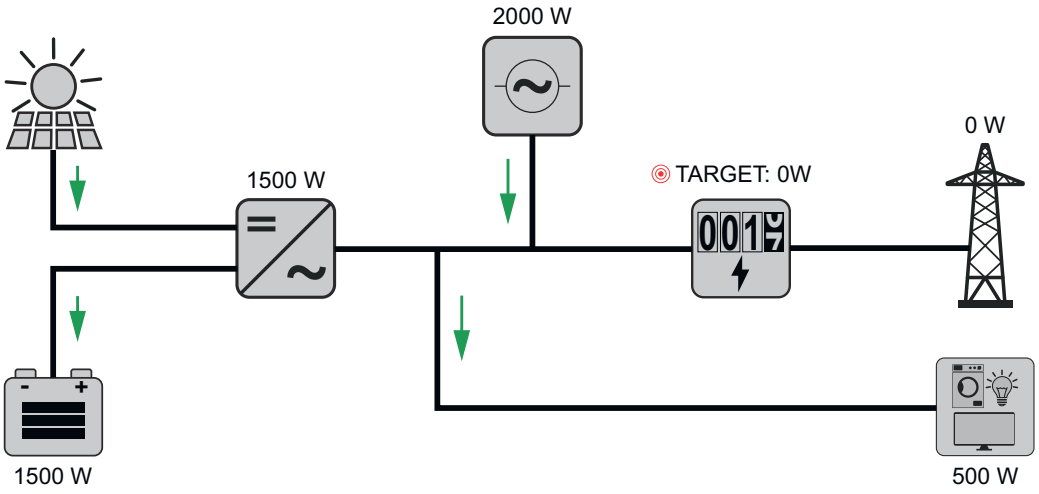

Example: Battery system including second producer in the house	
PV system available power	1000 W
Power into the battery	2500 W
Power consumption (AC) of the inverter	1500 W
Second producer in home network	2000 W
Target value set at feed-in point	0 W
Infeed into the public grid	0 W
Consumption in home	500 W

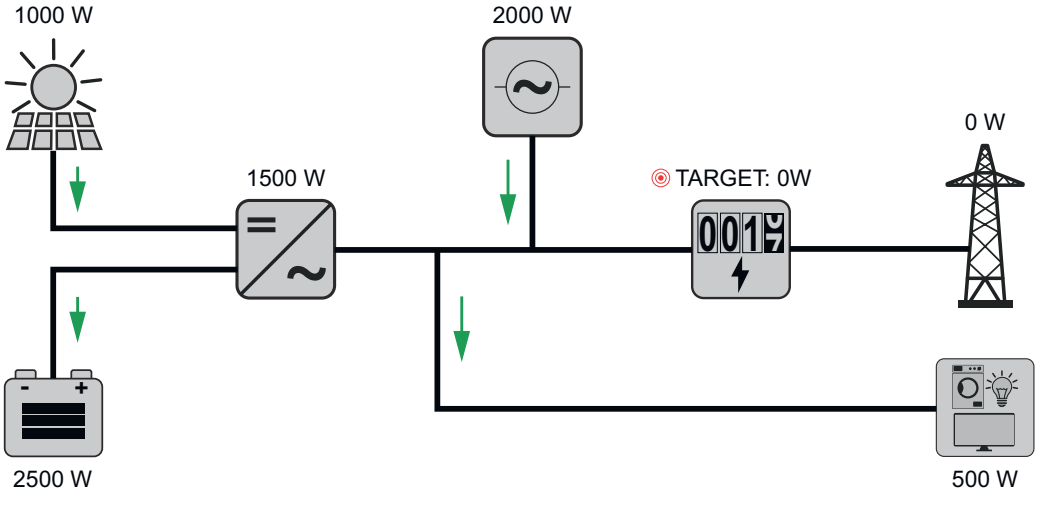

Example: Battery system including second producer in the house (with AC max. limitation)	
PV system available power	1000 W
Power into the battery	2000 W
Power consumption AC max. limited to	1000 W
Power consumption (AC) of the inverter	1000 W
Second producer in home network	2000 W
Target value set at feed-in point	0 W
Infeed into the public grid	500 W
Consumption in home	500 W

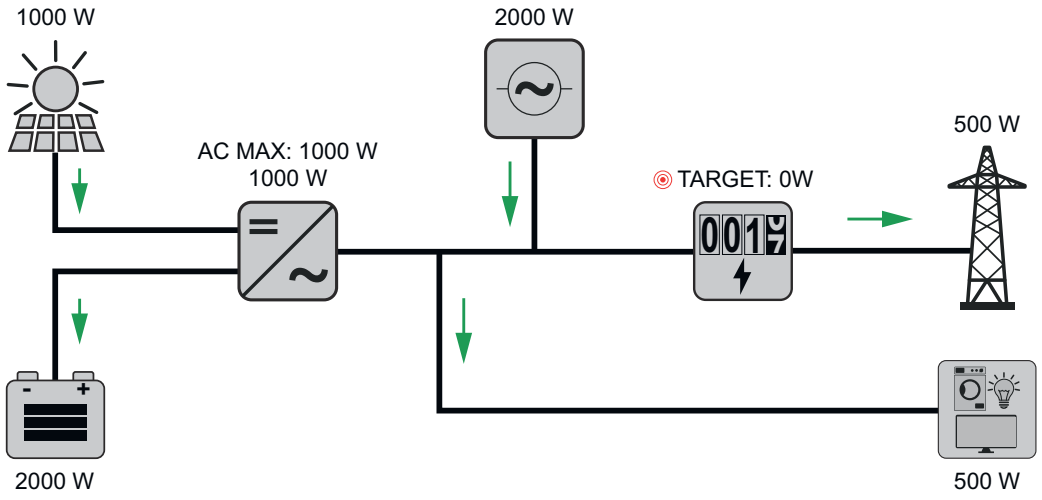

Allowed battery control rules

A rule always consists of a restriction or parameter and the time control **"Time"** and **"Weekdays"** while the rule is active. Rules with the same restriction (e.g. max. charging power) must not overlap in time.

Max. charging and discharging limits
The max. charging/max. discharging power can be configured at the same time.

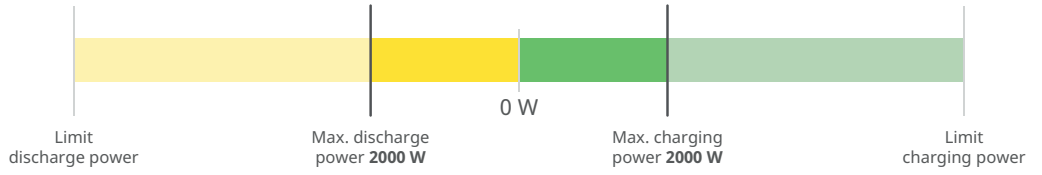

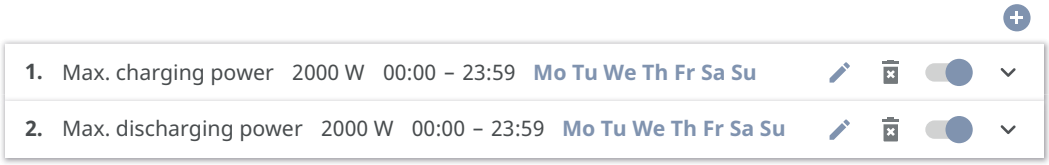

Specifying the charging range
It is possible to define a charging range with a min. and max. charging limit. In this case, it is not possible for the battery to discharge.

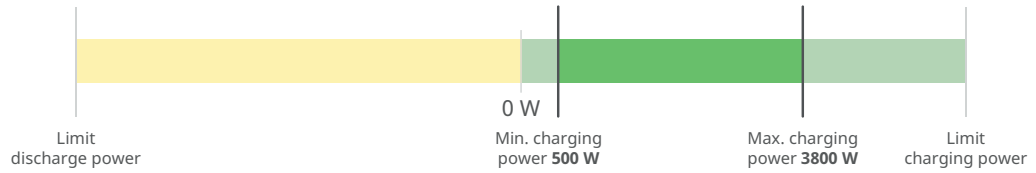

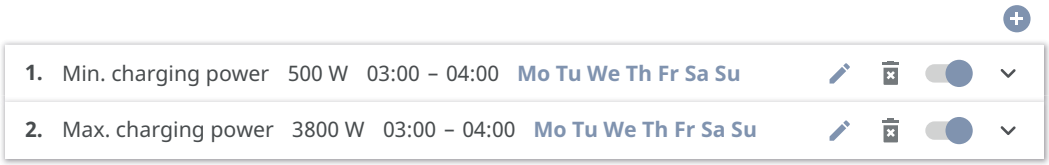

Specifying the discharging range
It is possible to define a discharging range with a min. and max. discharging limit. In this case, it is not possible for the battery to charge.

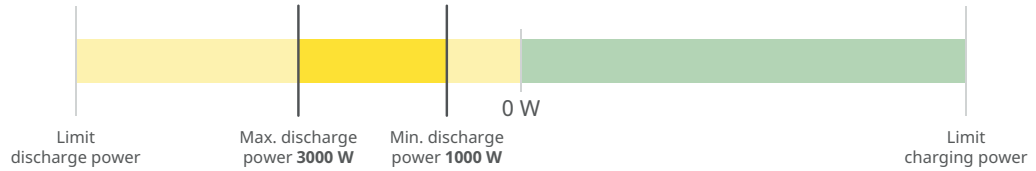

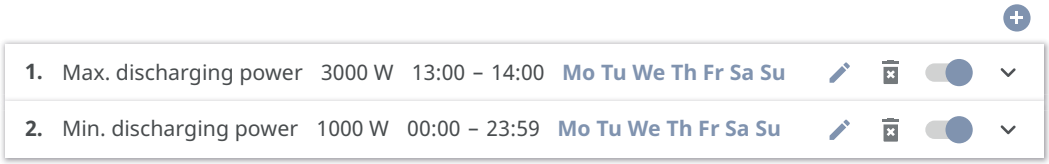

Specifying a defined charging power
A defined charging power can be specified by setting the min. and max. charging power to the same value.

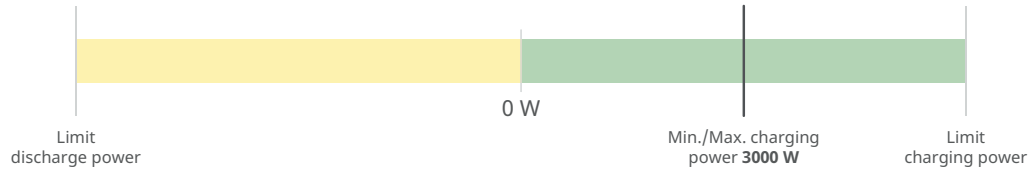

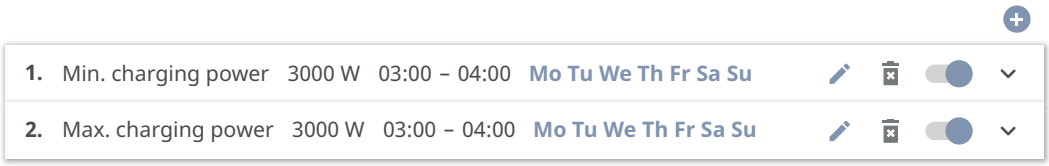

Specifying a defined discharging power
A defined discharging power can be specified by setting the min. and max. discharging power to the same value.

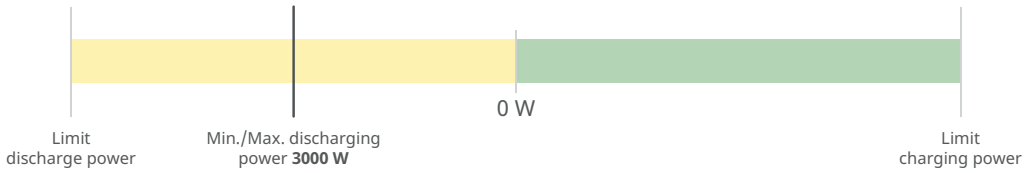

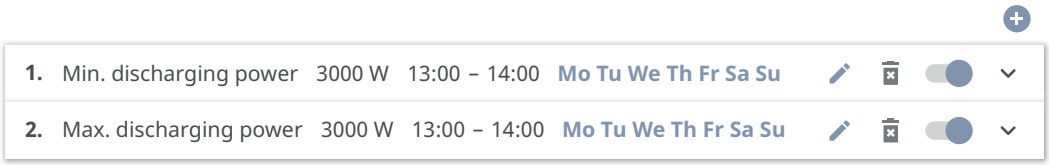

Possible applications
- Time-dependent electricity tariffs
- Battery reservation for market-specific power limitation
- Time-dependent storage reservation for a backup power situation

---

PV power reduction

The rules in the "Battery Management" menu area enable optimum use of the energy generated. Situations may arise, however, in which PV power cannot be used in full due to the time-dependent battery control.

Example	
Fronius inverter (max. output power)	6000 W
Defined battery discharging	6000 W
PV power	1000 W

In this case, the inverter would have to reduce the PV power to 0 W, since the output power of the inverter is max. 6000 W and this is already being used to capacity by the battery discharging.

Since it doesn't make sense to waste PV power, the power limit is automatically adjusted in Battery Management such that no PV power is wasted. In the example above, this means that the battery is discharged only at 5000 W, so that the 1000 W PV power can be used.

Load management

"Priorities"
If additional components (e.g. battery, Fronius Ohmpilot) are present in the system, the priorities can be set here. Devices having higher priority are actuated first, and subsequently, if there is still excess energy available, the other devices.

IMPORTANT!
If there is a Fronius Wattpilot in the photovoltaic system, it is seen as a load. The priority for the load management of the Wattpilot must be configured in the Fronius Solar.Wattpilot app.

"Rules"
It is possible for up to four different load management rules to be defined. At the same threshold values, the rules are activated in succession. For deactivation, this is done in reverse; the I/O last switched on is the first to be switched

off. In the case of different thresholds, the I/O with the lowest threshold is switched on first, followed by the second lowest, and so on.

I/Os controlled by the produced power are always prioritised over a battery and Fronius Ohmpilot. That is to say that an I/O can switch on and result in the battery no longer being charged or the Fronius Ohmpilot no longer being activated.

IMPORTANT!
An I/O is activated/deactivated only after 60 seconds.

"Load"
- Control is **"Off"** (disabled).
- Control is effected by the **"Power Production"**.
- Control is effected by **"Power Surplus"** (given feed limits). This option can only be selected if a meter has been connected. Control is effected using the actual power of feeding in with respect to the grid.

"Thresholds"
- **"On"**: For entering an effective power limit, at which the output is activated.
- **"Off"**: For entering an effective power limit, at which the output is deactivated.

"Duration"
- Field for enabling **"Minimum duration per on-signal"**, a minimum duration for which the output is to be activated for each switch-on process.
- Field for activating the **"Maximum duration per day"**.
- Field for enabling a **"Desired duration"** for which the output is to be activated in total per day (total of several switch-on processes).

System

General

General settings

1 In the **"System name"** input field, enter the name of the system (max. 30 characters).

2 **"Synchronize time automatically"** enabled → select "Area time zone" and "Location time zone". The date and time are applied from the time zone entered.

2 **"Synchronize time automatically"** disabled → enter or select "Date", "Time", "Area time zone" and "Location time zone".

3 Click on the **"Save"** button.

Update

All available updates are made available on the product page and in the "Download search" area under **www.fronius.com** .

Firmware update

1 Drag the firmware file into the "Drag&Drop file here" field or select it using "Select file".

The update will start.

Setup wizard

The guided setup wizard can be accessed here.

Restoring the factory settings

All settings
All configuration data is reset with the exception of the country setup. Changes to the country setup may only be carried out by authorized personnel.

All settings with no network
All configuration data is reset with the exception of the country setup and the network settings. Changes to the country setup may only be carried out by authorized personnel.

Event Log

Current Messages
All current events of the connected system components are shown here.

IMPORTANT!
Depending on the type of event, these must be confirmed via the "tick" button in order to be processed further.

History
All events of the connected system components that no longer exist are shown here.

Information

This menu displays all system information and the current settings.

Save as PDF

1. Click on the "Save as PDF" button.
2. Individually select information with the "tick" next to the information or tick to "Select all".
3. Enter the file name in the input field and click on the "Save" button.

The PDF is created and displayed.

License Manager

The licence file contains the performance data and the scope of functions of the inverter. When replacing the inverter, power stage set or data communication area, the licence file must also be replaced.

Licensing - online (recommended):
An Internet connection and completed configuration on Solar.web is required.

1. Complete the installation work (see chapter **Closing the inverter's connection area/housing cover, and commissioning** on page **101**).
2. Connect to the user interface of the inverter.
3. Enter the serial number and verification code (VCode) of the defective and replacement unit. The serial number and the VCode can be found on the rating plate of the inverter (see chapter **Warning notices on the device** on page **57**).
4. Click on the **"Start online licensing"** button.
5. Skip the Terms of use and Network settings menu items by clicking on **"Next"**.

The licence activation starts.

Licensing - offline:
There must be no Internet connection for this. When licensing offline with an established internet connection, the licence file is automatically uploaded to the inverter. Therefore, when uploading the licence file, the following error occurs: "The licence has already been installed and the wizard can be closed".

1. Complete the installation work (see chapter **Closing the inverter's connection area/housing cover, and commissioning** on page **101**).
2. Connect to the user interface of the inverter.
3. Enter the serial number and verification code (VCode) of the defective and replacement unit. The serial number and the VCode can be found on the rating plate of the inverter (see chapter **Warning notices on the device** on page **57**).
4. Click on the **"Start offline licensing"** button.
5. Download the service file onto the end device by clicking on the **"Download service file"** button.
6. Open the website **licensemanager.solarweb.com** and log in with your user name and password.
7. Drag or upload the service file into the **"Drop service file here or click to upload"** field.
8. Download the newly generated licence file onto the end device using the **"Download license file"** button.
9. Go to the user interface of the inverter and drag the licence file into the "Drag & drop license file here" field, or select it via "Choose license file".

The licence activation starts.

Support

Enable Support User

1 Click the **"Enable Support User"** button.

The support user is enabled.

IMPORTANT!
The support user only allows Fronius Technical Support to implement settings on the inverter via a secure connection. The button **"Terminate Support User Session"** deactivates the access.

Generate support info (for Fronius Support team)

1 Click on the **"Generate support info"** button.

2 The sdp.cry file is downloaded automatically. To download manually, click on the **"Download Support-Info"** button.

The sdp.cry file is saved in the downloads.

Activate Remote Access

1 Click on the **"Activate Remote Access"** button.

Remote maintenance access for the Fronius Support team is enabled.

IMPORTANT!
Remote maintenance access gives Fronius Technical Support exclusive access to the inverter via a secure connection. Diagnostic data is transmitted here that can be used for troubleshooting purposes. Only enable remote maintenance access following a request from the Fronius Support team.

Communication

Network

Server addresses for data transfer
If a firewall is used for outgoing connections, the following protocols, server addresses and ports must be allowed for successful data transfer:
- Tcp fronius-se-iot.azure-devices.net:8883
- Tcp fronius-se-iot-telemetry.azure-devices.net:8883
- Tcp fronius-se-iot-telemetry.azure-devices.net:443
- Udp sera-gen24.fronius.com:1194 (213.33.117.120:1194)
- Tcp cure-se.fronius.com:443
- Tcp firmware-download.fronius.com:443
- Tcp froniusseiot.blob.core.windows.net:443
- Tcp provisioning.solarweb.com:443
- Upd/Tcp 0.time.fronius.com:123

When using FRITZ!Box products, the Internet access must be configured to be unlimited and unrestricted. The DHCP Lease Time (validity) must not be set to 0 (=infinite).

LAN:

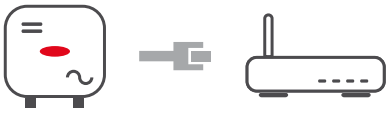

Establishing a connection:

1. Enter host name.
2. Select connection type **"automatic"** or **"static"**.
3. For connection type **"static"**: enter IP address, subnet mask, DNS and gateway.
4. Click on the **"Connect"** button.

✓ *The connection is established.*

After connecting, the status of the connection should be checked (see "**Internet Services**" on page **126**).

WLAN:



Establishing a connection via WPS:

☐ The access point of the inverter must be active. It is opened by touching the sensor → communication LED flashes blue.

1. Establish the connection to the inverter in the network settings (the inverter is displayed with the name "FRONIUS_" and the serial number of the device).
2. Enter the password from the rating plate and confirm.
   IMPORTANT!
   To enter the password on a Windows 10 operating system, the link "Connect using a security key instead" must first be activated to establish a connection with the password.
3. In the browser address bar, enter and confirm the IP address 192.168.250.181.

4 In **Network Settings**, click on the "**Enable**" button under **WLAN - WPS**.

5 Activate WPS on the WLAN router (see documentation provided with the WLAN router).

6 Click the **"Start"** button. The connection is established automatically.

7 Log in to the user interface of the inverter.

8 Check network details and Fronius Solar.web connection

After connecting, the status of the connection should be checked (see "**Internet Services**" on page **126**).

Select and connect WLAN network:

The networks found are shown in the list. Clicking on the refresh button ↻ will carry out a second search of the available WLAN networks. The **"Find network"** input field can be used to further restrict the selection list.

1 Select network from the list.

2 Select connection type **"automatic"** or **"static"**.

3 For connection type **"automatic"**: enter WLAN password and host name.

4 For connection type **"static"**: enter IP address, subnet mask, DNS and gateway.

5 Click on the **"Connect"** button.

✓ *The connection is established.*

After connecting, the status of the connection should be checked (see "**Internet Services**" on page **126**).

Access point:



The inverter serves as an access point. A PC or smart device connects directly to the inverter. It is not possible to connect to the internet. The **"Network name (SSID)"** and **"Network key (PSK)"** can be assigned in this menu.
It is possible to operate a connection via WLAN and via access point simultaneously.

Modbus

Modbus RTU interface 0 / 1

If one of the two Modbus RTU interfaces is set to Slave, the following input fields are available:

Baud rate The baud rate influences the transmission speed between the individual components connected in the system. When selecting the baud rate, ensure that it is the same at both the sending and receiving end.
Parity The parity bit can be used to check the parity. It detects transmission errors. A parity bit can safeguard a specific number of bits. The value (0 or 1) of the parity bit must be calculated by the sender and is checked by the recipient using the same calculation. The parity bit can be calculated for even and odd parity.

SunSpec Model Type
Depending on the SunSpec model, there are two different settings.

float: SunSpec Inverter Model 111, 112, 113 or 211, 212, 213.
int + SF: SunSpec Inverter Model 101, 102, 103 or 201, 202, 203.

Meter address

The value entered is the identification number (Unit ID) assigned to the meter.Can be found on the user interface of the inverter in the **Communication** → **Modbus** menu.
Factory setting: 200

Meter address
The value entered is the identification number (Unit ID) assigned to the meter.
Can be found on the user interface of the inverter in the **Communication** → **Modbus** menu.
Factory setting: 1

Slave as Modbus TCP

This setting is necessary to enable inverter control via Modbus. If the function **Slave as Modbus TCP** is activated, the following input fields are available:

Modbus port
Number of the TCP port that is to be used for Modbus communication.

SunSpec Model Type
Depending on the SunSpec model, there are two different settings.

float: SunSpec Inverter Model 111, 112, 113 or 211, 212, 213.
int + SF: SunSpec Inverter Model 101, 102, 103 or 201, 202, 203.

Meter address
The value entered is the identification number (Unit ID) assigned to the meter.Can be found on the user interface of the inverter in the **Communication** → **Modbus** menu.
Factory setting: 200

Inverter address
The value entered is the identification number (Unit ID) assigned to the inverter. Can be found on the user interface of the inverter in the **Communication** → **Modbus** menu.
Factory setting: This value is invariably defined as 1.

Inverter control via Modbus

If this option is activated, the inverter is controlled via Modbus.
Inverter control includes the following functions:
- on/off
- Power reduction
- Specification of a constant power factor (cos phi)
- Specification of a constant reactive power value
- Battery control specifications with battery

Restrict Control
An IP address can be entered here, which is the only one authorised to control the inverter.

Remote control

Remote control and **Profiles**
The grid operator/energy supplier can influence the output power of the inverter by means of remote control. The prerequisite for this is for the inverter to have an active internet connection.

Parameter	Value range	Description
Remote control	Off	Remote control of the inverter is deactivated.
	On	Remote control of the inverter is activated.
Allow remote control for regulatory purposes (Technician)	Deactivated/ Activated	The function **Allow remote control for regulatory purposes** may be mandatory for proper operation of the system. *)
Allow remote control for Virtual Power Plants (Customer)	Deactivated/ Activated	If the **Allow remote control for regulatory purposes** function is enabled (technician access required), the **Allow remote control for Virtual Power Plants** function is automatically enabled and cannot be disabled. *)

***) Cloud Control**
A virtual power plant is an interconnection of several power plant operators to form a network. This network can be controlled via the cloud over the internet. The inverter must have an active internet connection for this. System data is transmitted.

Fronius Solar API

The Fronius Solar API is an IP-based, open JSON interface. When enabled, IOT devices on the local network can access inverter information without authentication. For security reasons, the interface is deactivated at the factory and must be activated if it is required for a third-party application (e.g. EV charger, smart home solutions, etc.) or the Fronius Wattpilot.

For monitoring, Fronius recommends using Fronius Solar.web, which provides secure access to inverter status and production information.

When performing a firmware update to version 1.14.x, the setting of the Fronius Solar API is adopted. The Solar API is activated for systems with a version below 1.14.x. Above this version it is deactivated but can be switched on and off in the menu.

Activate the Fronius Solar API
Enable the **"Activate communication via Solar API"** function on the user interface of the inverter in the **"Communication"** → **"Solar API"**menu.

Internet Services

This menu displays information about the connections and the current connection status. In case of problems with the connection, a short error description is shown.

Safety and grid requirements

Country setup

⚠ WARNING!

Danger due to unauthorised error analyses and repair work.
This can result in serious injury and damage to property.
- ▶ Fault analyses and repair work on the photovoltaic system may only be carried out by installers/service technicians from authorised specialist companies in accordance with national standards and guidelines.

NOTE!

Risk due to unauthorised access.
Incorrectly set parameters can negatively influence the public grid and/or the inverter feeding energy into the grid, and lead to a loss of conformity with the standard.
- ▶ The parameters may only be adjusted by installers/service technicians from authorised specialist companies.
- ▶ Do not give the access code to third parties and/or unauthorised persons.

NOTE!

Risk due to incorrectly set parameters.
Incorrectly set parameters can negatively influence the public grid and/or cause faults and failures on the inverter, and lead to the loss of conformity with the standard.
- ▶ The parameters may only be adjusted by installers/service technicians from authorised specialist companies.
- ▶ The parameters may only be adjusted if the energy provider permits or requires this.
- ▶ Only adjust the parameters taking into account the nationally applicable standards and/or directives and the specifications of the energy provider.

The "Country Setup" menu area is intended exclusively for installers/service technicians from authorised specialist companies. To request the access code required for this menu area, see chapter **Requesting inverter codes in Solar.SOS**.

The selected country setup for the respective country contains preset parameters according to the nationally applicable standards and requirements. Depending on local grid conditions and the specifications of the energy provider, adjustments to the selected country setup may be necessary.

Requesting inverter codes in Solar.SOS

The "Country Setup" menu area is intended exclusively for installers/service technicians from authorised specialist companies. The inverter access code required for this menu area can be requested in the Fronius Solar.SOS portal.

Requesting inverter codes in Solar.SOS:

1. Go to **solar-sos.fronius.com** in a browser
2. Log in with your Fronius account
3. On the top right, click on the drop-down menu

4 Select the menu item **Show inverter codes**

✓ *A contract page appears on which the request for the access code to change the grid parameters for Fronius inverters is located*

5 Accept the Terms of use by checking **Yes, I have read and agree to the terms of use** and click **Confirm & Save**

6 After that, the codes can be retrieved in the drop-down menu at the top right under **Show inverter codes**

⚠ CAUTION!

Risk due to unauthorised access.
Incorrectly set parameters can negatively influence the public grid and/or the inverter feeding energy into the grid, and lead to a loss of conformity with the standard.

- ▶ The parameters may only be adjusted by installers/service technicians from authorised specialist companies.
- ▶ Do not give the access code to third parties and/or unauthorised persons.

Feed-in limitation

Energy companies or grid operators may stipulate feed-in limitations for an inverter (e.g. max. 70% of kWp or max. 5 kW).
The feed-in limitation takes account of self-consumption by the household before the power of an inverter is reduced:

- A custom limit can be set.
- A Fronius Smart Meter can be connected to the Modbus push-in terminal of the data communication area at the M0/M1- / M0/M1+ connections for Modbus data.

With the inverter, any PV power that is not allowed to be fed into the public grid is used to charge the battery instead and/or used by the Fronius Ohmpilot so that it does not go to waste. The feed-in limitation is only active if the power fed in is higher than the set power reduction.

"Power limitation" deactivated
The inverter converts the entire available PV power and feeds it into the public grid.

"Power limitation" activated
The entire PV system is restricted to a set power limit. The value of the total permissible feed-in power must be set.

"Total DC system power"
Input field for the total DC system power in Wp.
This value is used if the **"Maximum permitted feed-in power of the entire system"** is specified in %.

"Soft Limit"
If this value is exceeded, the inverter will regulate down to the set value within the time required by national standards and regulations.

"Hard Limit"
If this value is exceeded, the inverter switches off within max. five seconds. This value must be higher than the value set for **"Soft Limit"**.

"Maximum permitted feed-in power of the entire system"
Input field for the "Maximum permitted feed-in power of the entire system" in W or % (setting range: -10 to 100 %).

If there is no meter in the system or if a meter has failed, the inverter limits the feed-in power to the set value.

Example: Feed-in limitation (without consideration of the efficiency)	
PV system on Fronius inverter:	5,000 W
Consumption in home:	1,000 W
Maximum permitted feed-in power of the entire system:	60 % = 3,000 W
Case 1: The battery can be charged	
Power at grid feed-in point:	0 W
Power at inverter output:	1,000 W
Power into the battery:	3,000 W
Case 2: The battery cannot be charged	
Power at grid feed-in point	3,000 W
Power at inverter output:	4,000 W
Power into the battery:	0 W
In this example, no more than 3,000 W may be fed into the grid at the grid feed-in point. However, any loads that are located between the inverter and the grid feed-in point can be supplied by additional power from the inverter. These loads are also compensated as required.	

Dynamic power regulation with several inverters

Example 1: Fronius SnapINverter ≤ Fronius Primo GEN24
Only one primary meter is required for the Fronius Primo GEN24 inverter.

The power values shown are an example. Inverter configurations with power values other than those shown in the example are possible, taking into account the criteria for this example.

IMPORTANT!
Zero feed-in is not possible when using 2 inverters.

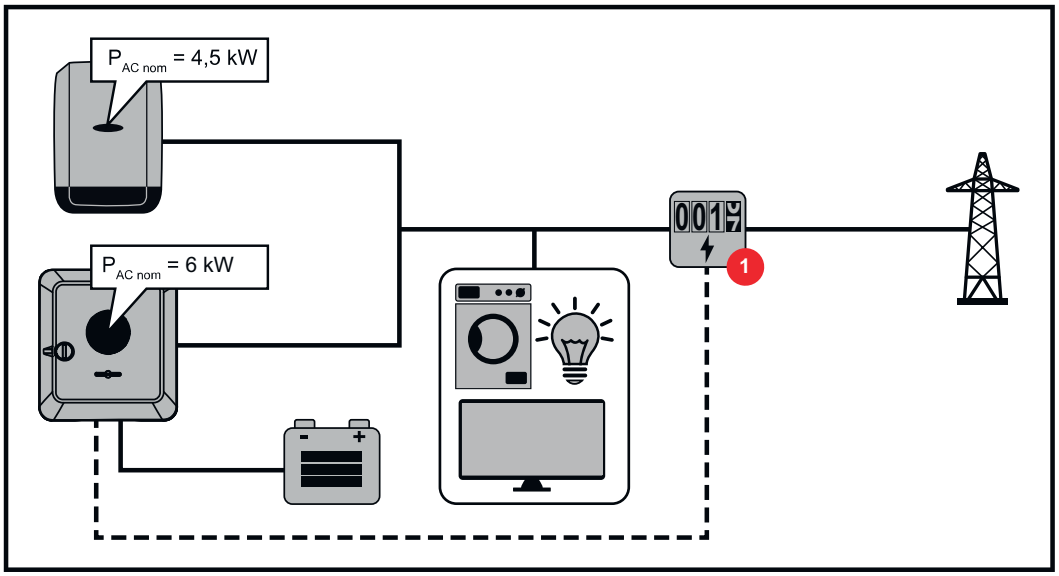

Settings on the user interface of the Fronius Primo GEN24 inverter:

1 Configure the primary meter at the feed-in point in the **"Device configuration"** → **"Components"** menu.

2 Activate the limit for the entire system in the **"Safety and grid regulations"** → **"Export limitation"** menu. Enter the DC rated power of the entire PV system in the **"Total DC system power"** input field. Enter the percentage value (50%, 60% or 70%) in the **"Maximum permitted feed-in power of the entire system"** input field.

Example 2a: Fronius SnapINverter > Fronius Primo GEN24
Two primary meters are required for the inverters.

The power values shown are an example. Inverter configurations with power values other than those shown in the example are possible, taking into account the criteria for this example.

IMPORTANT!
With two primary meters at the feed-in point without a secondary meter, Fronius SnapINverter and Fronius Primo GEN24 inverters cannot be displayed as a combined PV system in Solar.web. Two individual PV systems must be created in Solar.web.

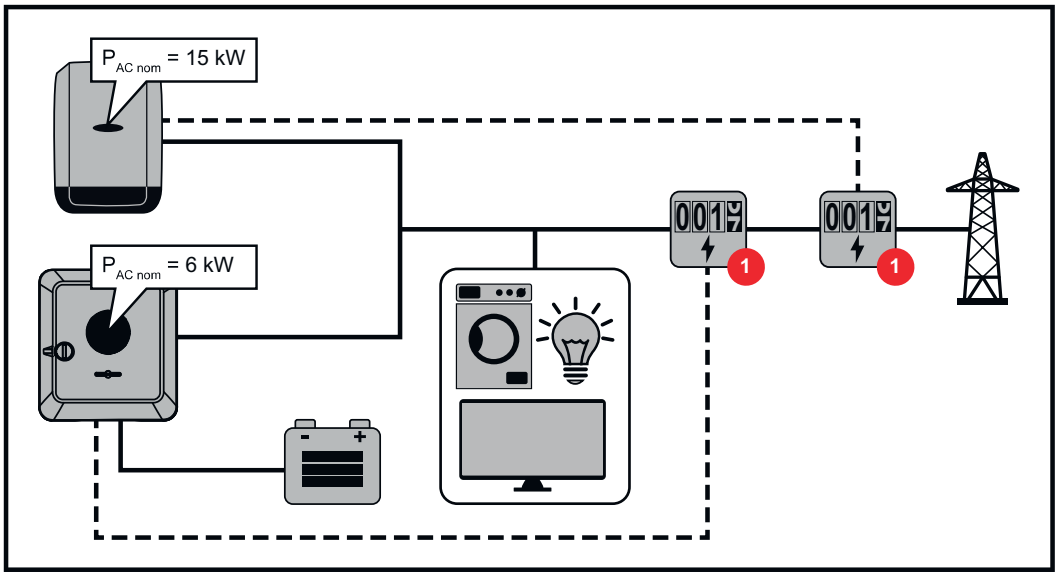

Settings on the user interface of the Fronius Primo GEN24 inverter:

1 Configure the primary meter at the feed-in point in the **"Device configuration"** → **"Components"** menu.

Settings in the system monitoring of the Fronius SnapInverter:

1 Configure the primary meter at the feed-in point in the **"Settings "** → **"Meter"** menu.

2 Activate the limit for the entire system in the **"DNO Editor"** → **"Dynamic power reduction"** menu. Enter the DC rated power of the entire PV system in the **"Total DC system power"** input field. Enter the percentage value (50%, 60% or 70%) in the **"Max. grid feed-in power"** input field.

Example 2b: Fronius SnapINverter > Fronius Primo GEN24
Two primary meters and one secondary meter are required for the inverters.

The power values shown are an example. Inverter configurations with power values other than those shown in the example are possible, taking into account the criteria for this example.

IMPORTANT!
In order to be able to record all PV system data in Solar.web in full, only the Fronius Primo GEN24 inverter may be created in this PV system. The Fronius SnapINverter data is transmitted from the secondary meter to the Fronius Primo GEN24 inverter and thus displayed in Solar.web.
We recommend that you set up the Fronius SnapINverter as a separate additional PV system in Solar.web for servicing and maintenance work (e.g. status codes, online updates, etc.).

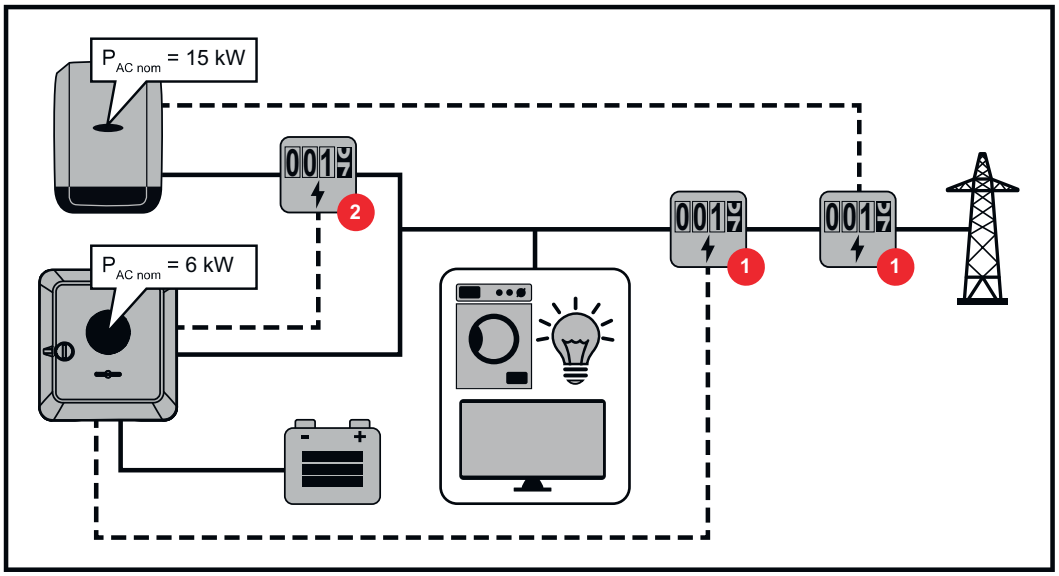

Settings on the user interface of the Fronius Primo GEN24 inverter:

1 Configure the primary meter at the feed-in point in the **"Device configuration"** → **"Components"** menu.

2 Configure the secondary meter in the **"Device configuration"** → **"Components"** menu.

Settings in the system monitoring of the Fronius SnapInverter:

1 Configure the primary meter at the feed-in point in the **"Settings "** → **"Meter"** menu.

2 Activate the limit for the entire system in the **"DNO Editor"** → **"Dynamic power reduction"** menu. Enter the DC rated power of the entire PV system in the **"Total DC system power"** input field. Enter the percentage value (50%, 60% or 70%) in the **"Max. grid feed-in power"** input field.

I/O power management

General
In this menu item, settings relevant for a distribution network operator (DNO) are made. An effective power limitation in % and/or a power factor limitation can be set.

IMPORTANT!
Select the **"Technician"** user for settings in this menu item, enter and the password for the **"Technician"** user and confirm. Settings in this menu area must only be made by trained and qualified personnel.

"Input pattern" (assignment of individual I/Os)
1 click = white (contact open)
2 clicks = blue (contact closed)
3 clicks = grey (not used)

"Power factor (cos φ)"
"ind" = inductive
"cap" = capacitive

"DNO feedback"
When the rule is enabled, output **"DNO feedback"** (pin 1 recommended) must be configured (e.g. for operating a signalling device).

For **"Import"** or **"Export"**, the data format *.fpc is supported.

Control priorities
For setting the control priorities for the ripple control signal receiver, the export limitation and control via Modbus.

1 = highest priority, 3 = lowest priority

Connection diagram - 4 relay

The ripple control signal receiver and the I/Os terminal of the inverter can be connected to one another in accordance with the connection diagram.
If the distance between the inverter and the ripple control signal receiver exceeds 10 m, at least a CAT 5 cable is recommended and the shield must be connected at one end to the push-in terminal of the data communication area (SHIELD).

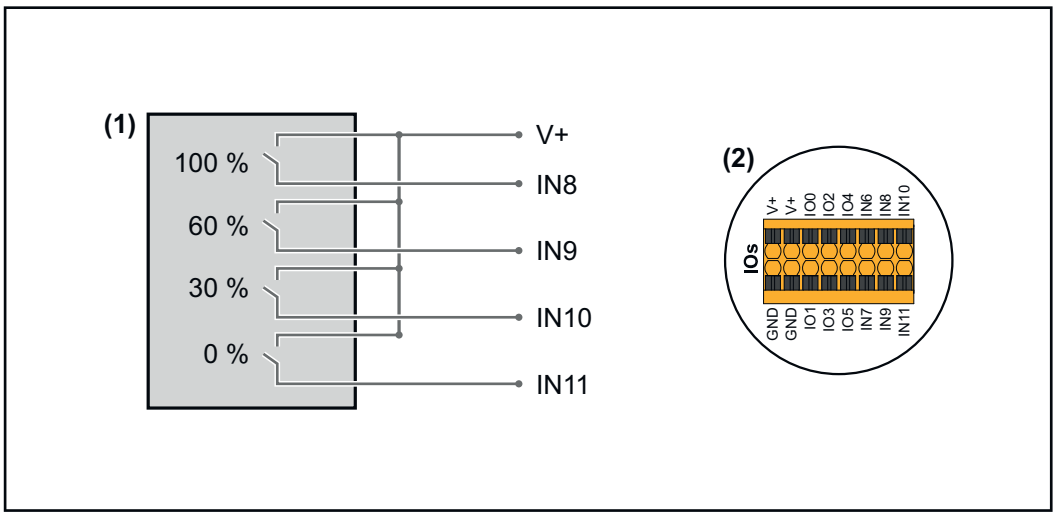

(1) Ripple control signal receiver with 4 relays, for effective power limiting.
(2) I/Os of the data communication area.

Use the preconfigured file for 4-relay mode:

1. Download the file (.fpc) **under 4-relay mode** onto the end device.
2. Upload the file (.fpc) in the **"I/O Power Management"** menu using the **"Import"** button.
3. Click on the **"Save"** button.

The settings for 4-relay mode are stored.

I/O power management settings - 4 relays



Connection diagram - 3 relay

The ripple control signal receiver and the I/Os terminal of the inverter can be connected to one another in accordance with the connection diagram.
If the distance between the inverter and the ripple control signal receiver exceeds 10 m, at least a CAT 5 cable is recommended and the shield must be connected at one end to the push-in terminal of the data communication area (SHIELD).

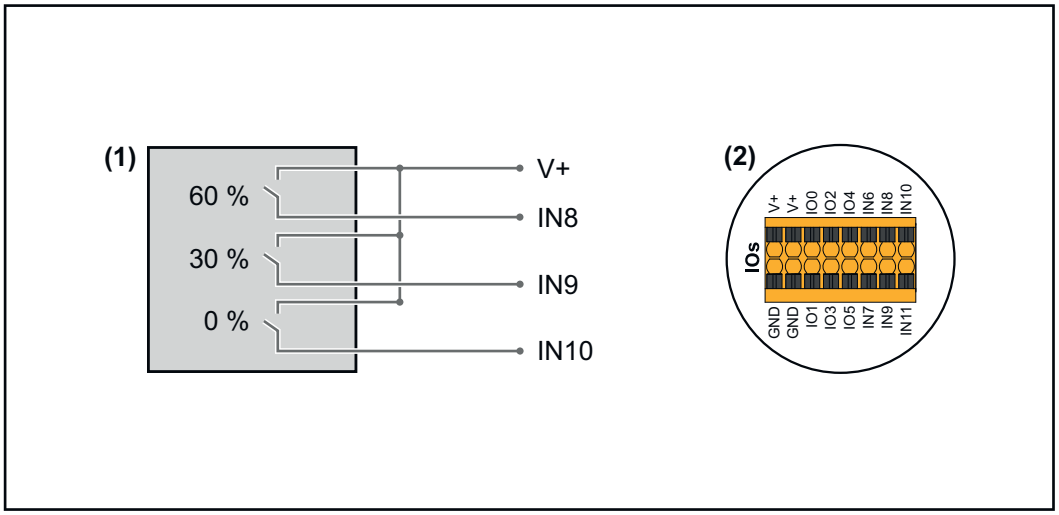

(1) Ripple control signal receiver with 3 relays, for effective power limiting.
(2) I/Os of the data communication area.

Use the preconfigured file for 3-relay mode:

1. Download the file (.fpc) **under 3-relay mode** onto the end device.
2. Upload the file (.fpc) in the **"I/O Power Management"** menu using the **"Import"** button.
3. Click on the **"Save"** button.

The settings for 3-relay mode are stored.

I/O power management settings - 3 relays

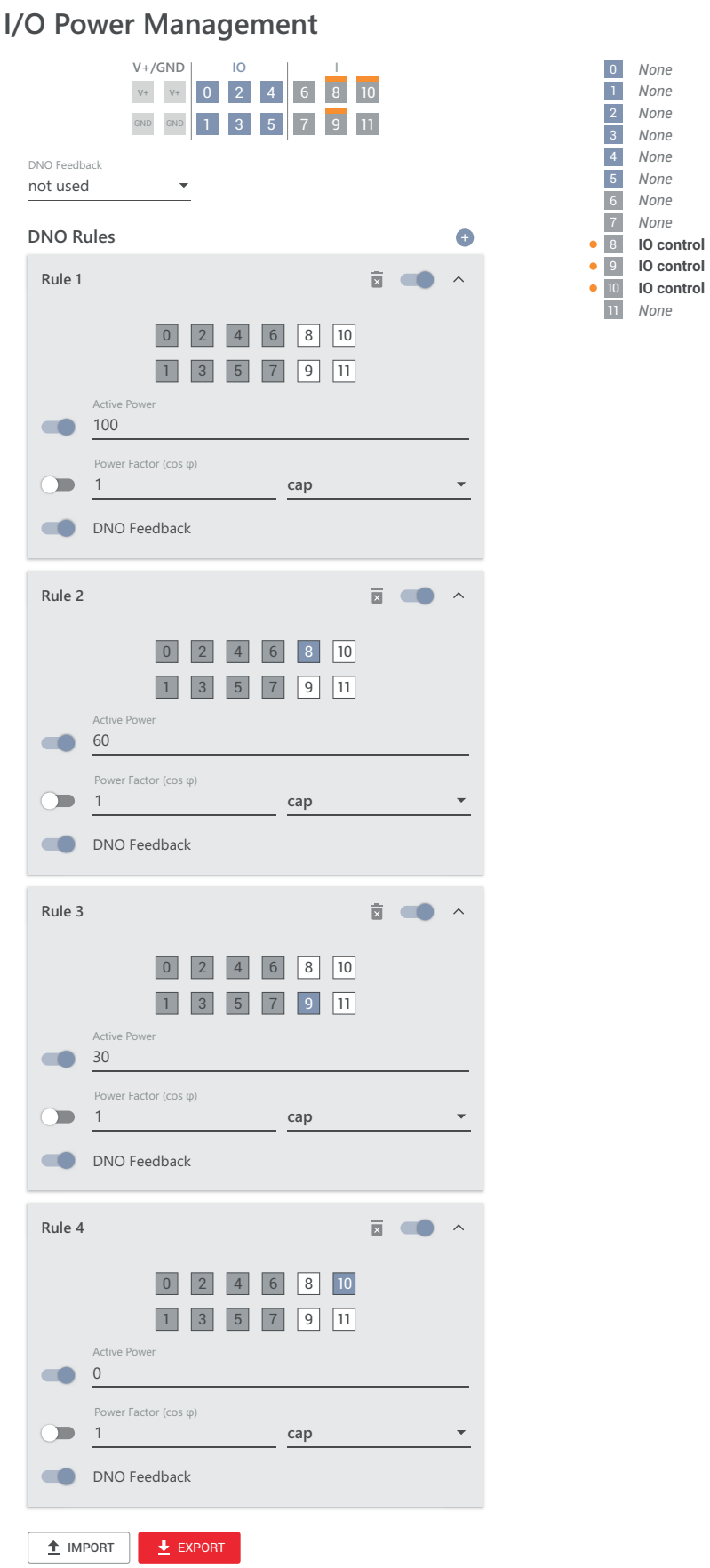

Connection diagram - 2 relay

The ripple control signal receiver and the I/Os terminal of the inverter can be connected to one another in accordance with the connection diagram.
If the distance between the inverter and the ripple control signal receiver exceeds 10 m, at least a CAT 5 cable is recommended and the shield must be connected at one end to the push-in terminal of the data communication area (SHIELD).

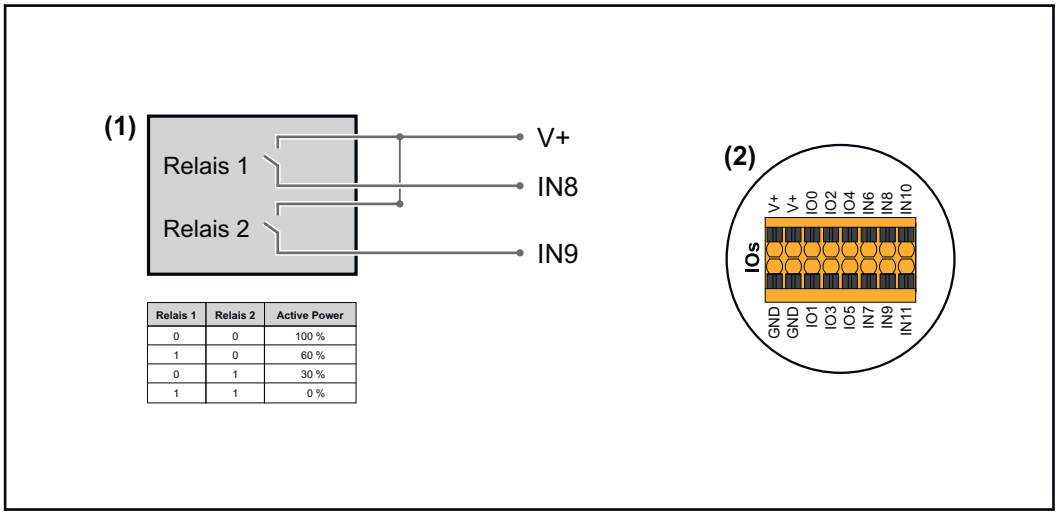

Relais 1	Relais 2	Active Power
0	0	100 %
1	0	60 %
0	1	30 %
1	1	0 %

(1) Ripple control signal receiver with 2 relays, for effective power limiting.
(2) I/Os of the data communication area.

Use the preconfigured file for 2-relay mode:

1. Download the file (.fpc) **under 2-relay mode** onto the end device.
2. Upload the file (.fpc) in the **"I/O Power Management"** menu using the **"Import"** button.
3. Click on the **"Save"** button.

The settings for 2-relay mode are stored.

I/O power management settings - 2 relays

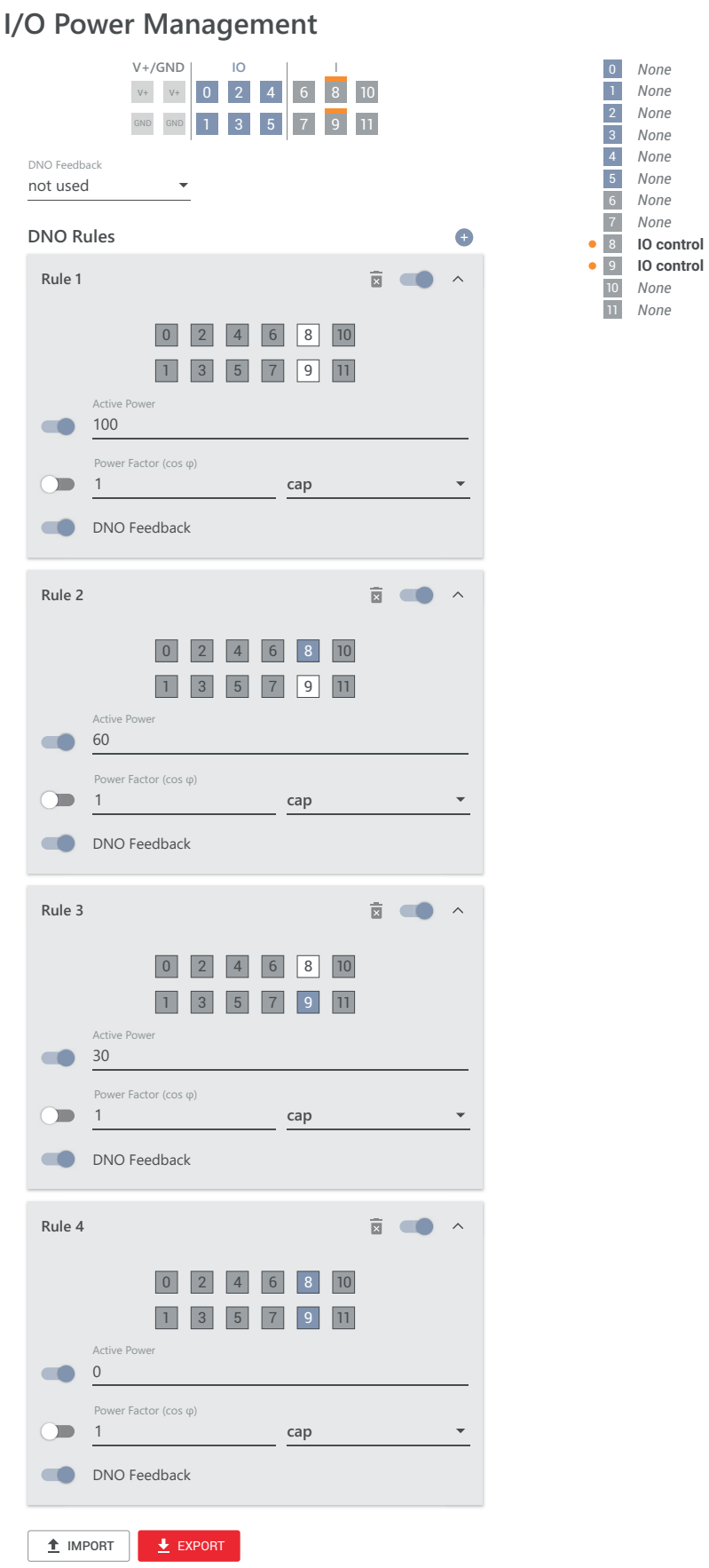

Connection diagram - 1 relay

The ripple control signal receiver and the I/Os terminal of the inverter can be connected to one another in accordance with the connection diagram.
If the distance between the inverter and the ripple control signal receiver exceeds 10 m, at least a CAT 5 cable is recommended and the shield must be connected at one end to the push-in terminal of the data communication area (SHIELD).

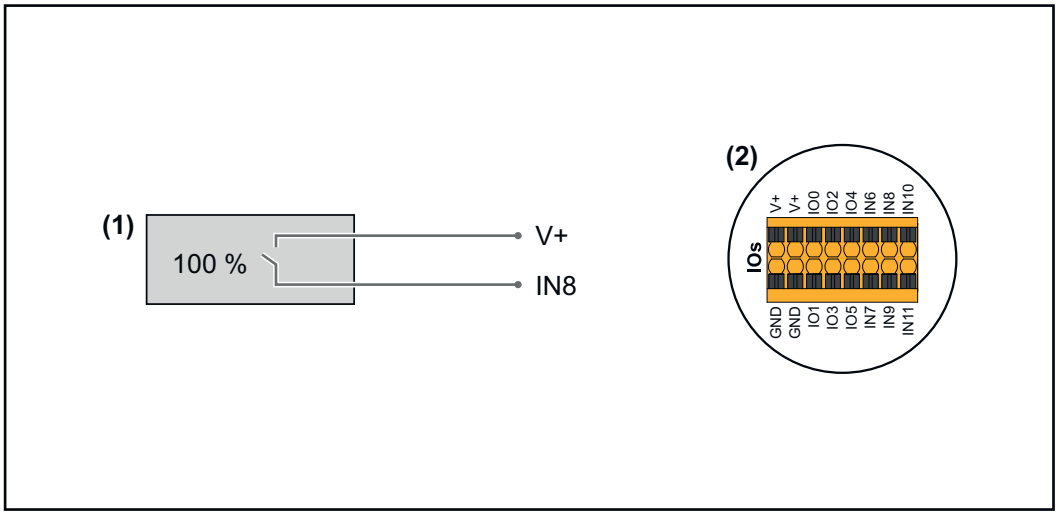

(1) Ripple control signal receiver with 1 relay, for effective power limiting.
(2) I/Os of the data communication area.

Use the preconfigured file for 1-relay mode:

1. Download the file (.fpc) **under 1-relay mode** onto the end device.
2. Upload the file (.fpc) in the **"I/O Power Management"** menu using the **"Import"** button.
3. Click on the **"Save"** button.

The settings for 1-relay mode are stored.

I/O power management settings - 1 relay

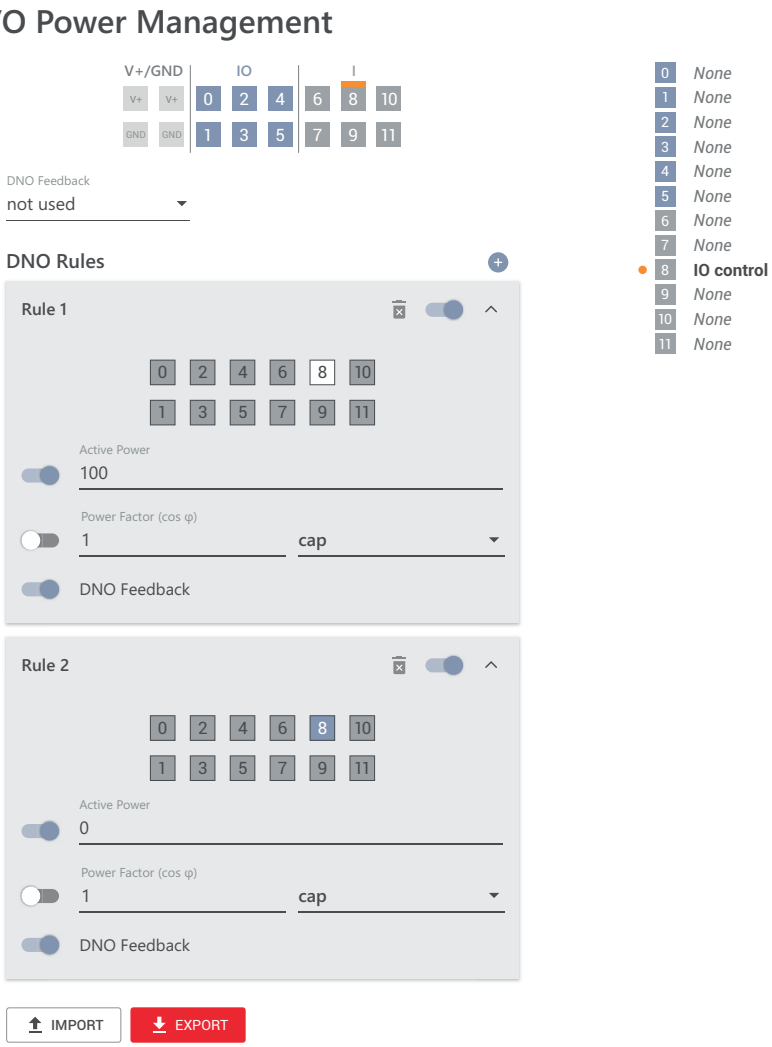

Connecting a ripple control receiver to multiple inverters

The grid operator may request the connection of one or more inverters to a ripple control receiver in order to limit the effective power and/or the power factor of the photovoltaic system.

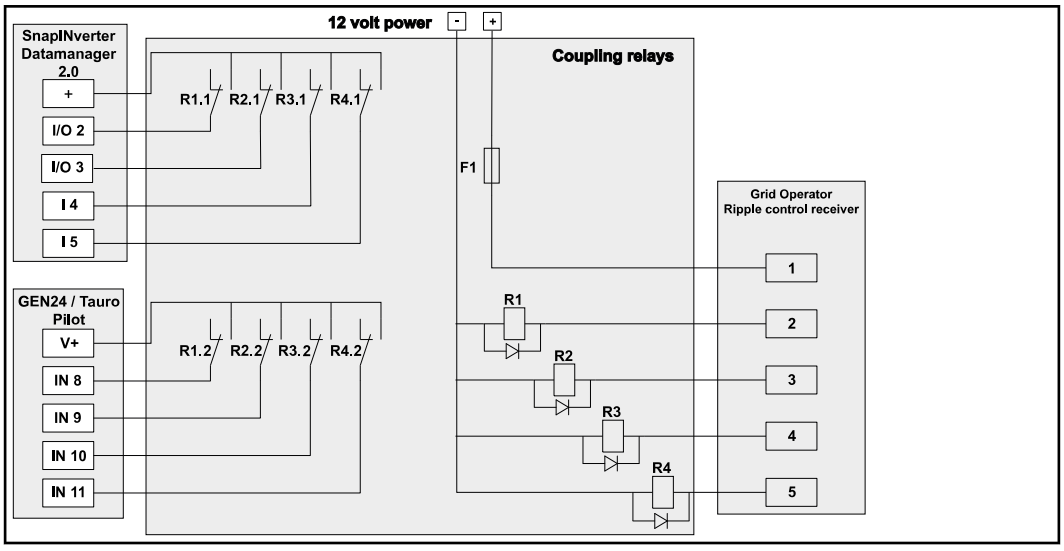

Connection diagram showing ripple control receiver with multiple inverters

The following Fronius inverters can be connected to a ripple control receiver via a distributor (coupling relay):
- Symo GEN24
- Primo GEN24
- Tauro
- SnapINverter (only devices with Fronius Datamanager 2.0)

IMPORTANT!
The **"4-relay mode"** setting (see **Connection diagram - 4 relay** and**I/O power management settings - 4 relays**) must be enabled on the user interface of each inverter connected to the ripple control receiver.

Autotest (CEI 0-21)

Description
The **"Autotest"** can be used to check the protection function required by Italian standards for monitoring the voltage and frequency limit values of the inverter during commissioning. In normal operation, the inverter constantly checks the current voltage and frequency actual value of the grid.
After starting the autotest, various individual tests run automatically one after the other. Depending on network conditions, the duration of the test is about 15 minutes.

IMPORTANT!
The inverter may only be commissioned in Italy after an autotest has been successfully performed (CEI 0-21). If the autotest is not passed, feeding energy into the grid is not permitted. Once the autotest is started, it must be completed successfully. The autotest cannot be started during backup power operation.

U max	Test for checking the maximum voltage in phase conductors
U min	Test for checking the minimum voltage in phase conductors
f max	Test for checking the maximum grid frequency
f min	Test for checking the minimum grid frequency
f max alt	Test for checking an alternative maximum grid frequency
f min alt	Test for checking an alternative minimum grid frequency
U outer min	Test for checking the minimum external voltages
U longT.	Test for checking the 10-minute mean voltage value

"Save as PDF"

1 Click on the **"Save as PDF"** button.

2 Enter the file name in the input field and click on the **"Print"** button.

The PDF is created and displayed.

Note on the autotest
The limit values are set in the **"Grid Code"** menu.
The access code for the **"Grid Code"** menu corresponds to the installer code (PROFI menu) and is only made available after a written request to Fronius. A corresponding application form is available from the national technical support.

Options

Surge protective device (SPD)

General

A surge protective device (SPD) protects against temporary overvoltages and dissipates surge currents (e.g. lightning strike). Building on an overall lightning protection concept, the SPD helps to protect your PV system components.
For detailed information on the wiring diagram of the surge protective device, see chapter **Surge protective device (SPD)** on page **214**.

If the surge protective device is triggered, the colour of the indicator changes from green to red (mechanical display) and the operation LED of the inverter lights up red (see chapter **Button functions and LED status indicator** on page **35**). The error code **"1030 WSD Open"** is displayed on the user interface of the inverter in the **"System"** → **"Event Log"** menu or in the user menu under **"Notifications"** as well as in Fronius Solar.web. In this case, the inverter must be repaired by an authorised specialist.

IMPORTANT!
The inverter also switches off if the 2-pin signal cable of the surge protective device is interrupted or damaged.

External surge protective device
To receive notification when external surge protective devices are triggered, it is recommended to connect the feedback contacts in series to the WSD input.

Safety

⚠ **WARNING!**

Danger due to electrical voltage on live parts of the photovoltaic system.
This can result in serious injury and damage to property.
- ▶ Disconnect live parts of the photovoltaic system on all pins and on all sides.
- ▶ Secure against re-activation in accordance with national regulations.
- ▶ Allow the capacitors of the inverter to discharge (2 minutes).
- ▶ Check that the inverter is de-energised with a suitable measuring device.

⚠ **WARNING!**

Danger due to work that has been carried out incorrectly.
This can result in serious injury and damage to property.
- ▶ Installing and connecting an option must only be carried out by service personnel trained by Fronius and only within the scope of the respective technical regulations.
- ▶ Follow the safety rules.

Scope of supply

The surge protective device (SPD) is an optional extra and can be retrofitted to the inverter.

For technical data, see chapter "**Technical data**" on page **182**.

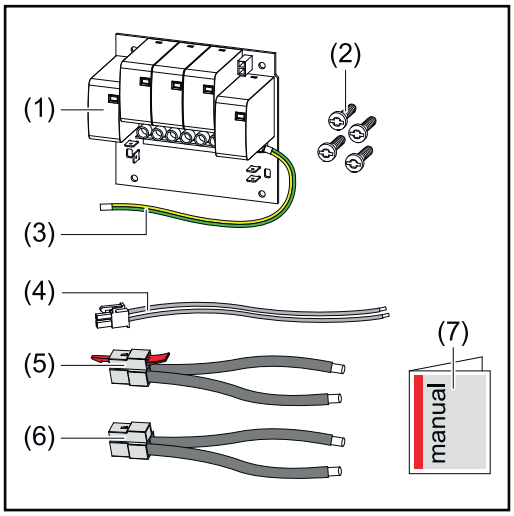

1. PC board
2. 4 TX20 screws
3. Ground conductor
4. 2-pin signal cable
5. PV cable
6. PV+ cable
7. User Information

De-energising the inverter

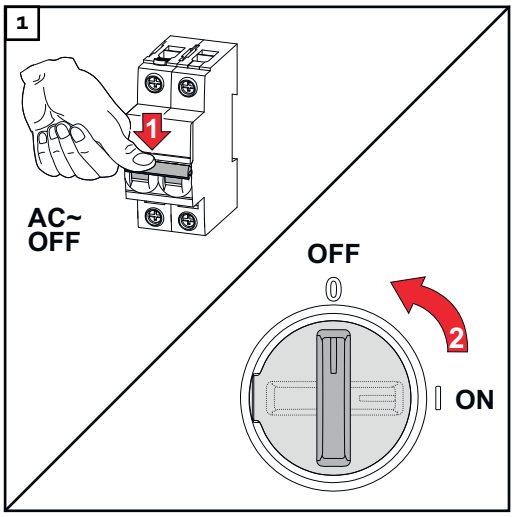

Turn off the automatic circuit breaker. Set the DC disconnector to the "Off" switch position.

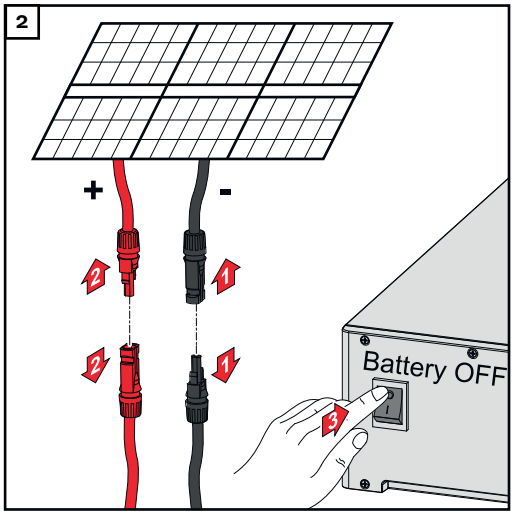

Disconnect connections from the solar module strings (+/-). Switch off the battery connected to the inverter.

Wait for the capacitors of the inverter to discharge (2 minutes).

⚠ CAUTION!

Danger due to insufficiently dimensioned ground conductor.
Damage to the inverter due to thermal overload can result.
▶ The national standards and guidelines must be observed for dimensioning the ground conductor.

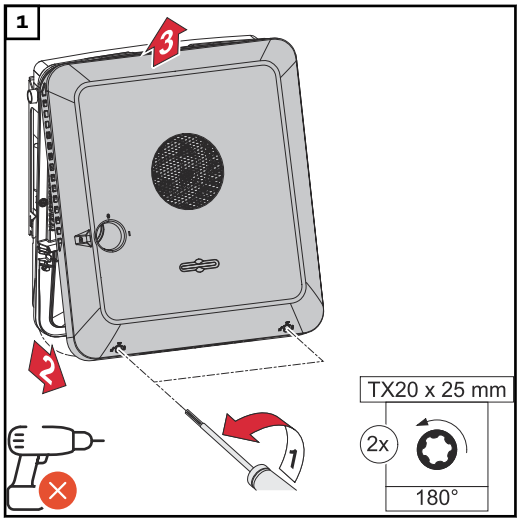

Loosen the two screws on the underside of the housing cover by rotating them 180° to the left using a screwdriver (TX20). Then lift the housing cover away from the inverter at the bottom and detach from above.

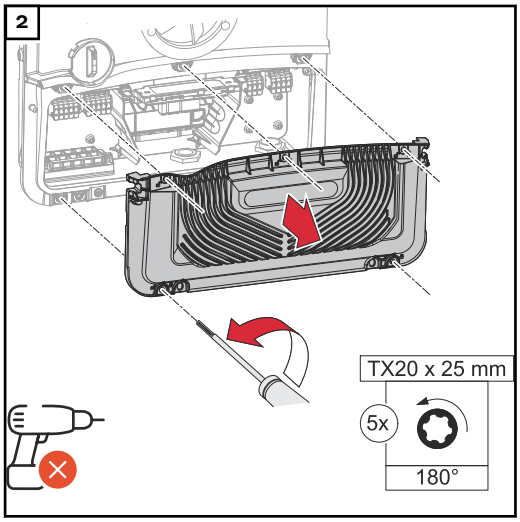

Loosen the five screws of the connection area cover by rotating them 180° to the left using a screwdriver (TX20). Remove the connection area cover from the device.

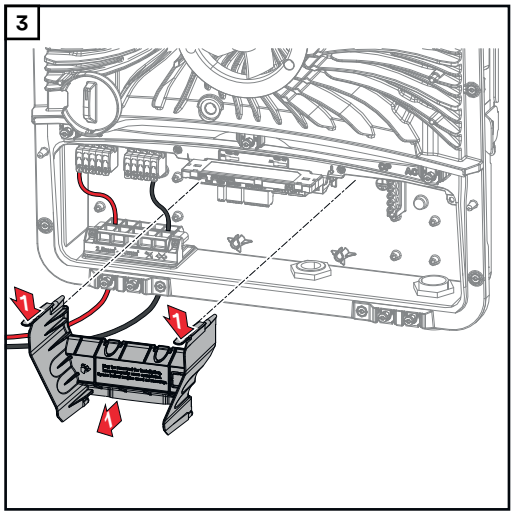

Remove the connection area divider by pressing the snap tabs.

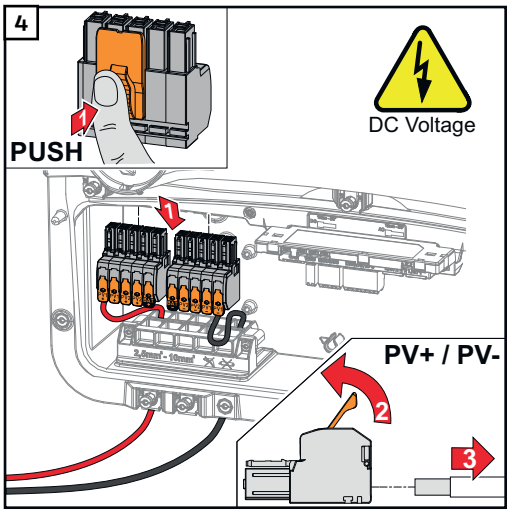

Remove the DC push-in terminals from the slots and disconnect them from the cables (only necessary if the installation already exists).

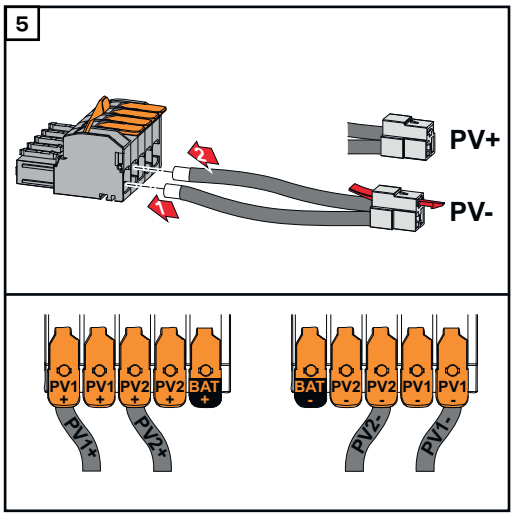

Connect the supplied PV+/PV- cables to the respective connections.

IMPORTANT!
Note the labelling of the cables when connecting.

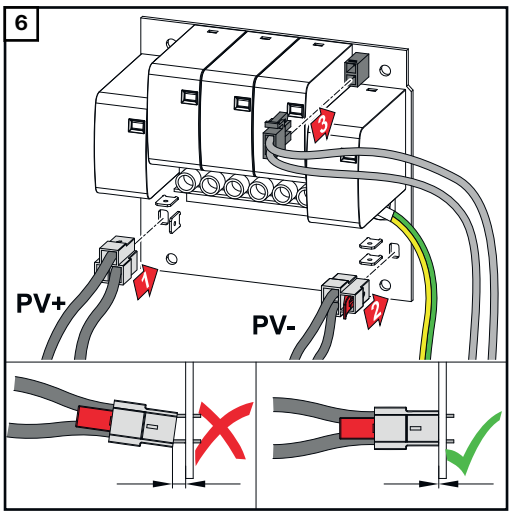

Connect the supplied cables to the respective connections on the PC board.

IMPORTANT!
The plugs must be connected onto the PC board as far as they will go.

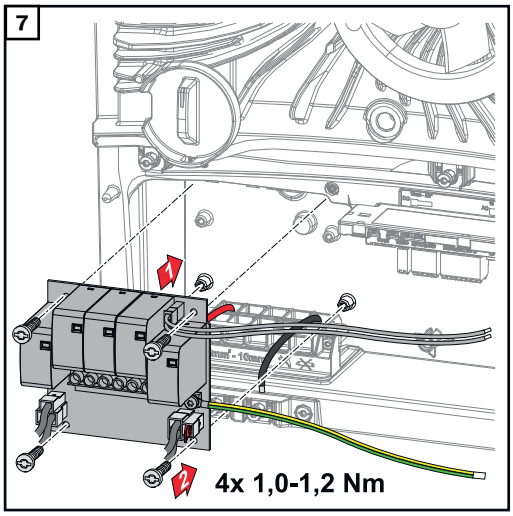

Insert the PC board into the inverter and secure with the four screws (TX20) supplied at a torque of 1.0 - 1.2 Nm.

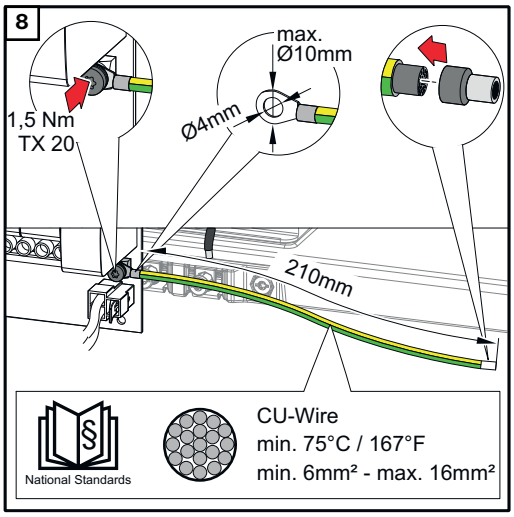

IMPORTANT!
Depending on national standards and guidelines, a larger cross section of the ground conductor may be required.

Dimension the cable cross section of the ground conductor according to the national standards and guidelines and fit a ring cable lug (inner diameter: 4 mm, outer diameter: max. 10 mm) as well as a corresponding ferrule. Fasten the ground conductor to the PC board with a torque of 1.5 Nm.

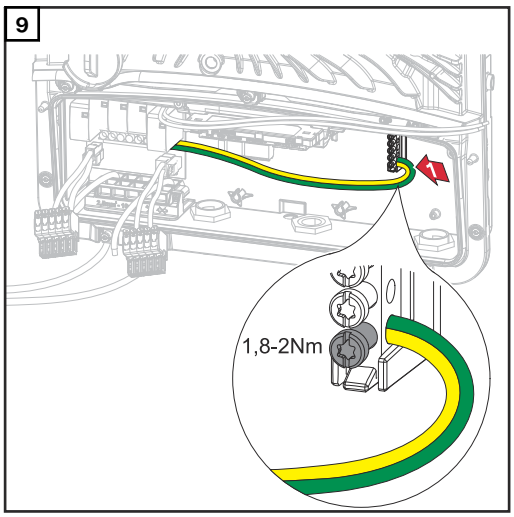

Fasten the ground conductor to the first input from the bottom of the ground electrode terminal using a screwdriver (TX20) and a torque of 1.8 - 2 Nm.

IMPORTANT!
The use of other inputs can make it difficult to insert the connection area divider or damage the ground conductor.

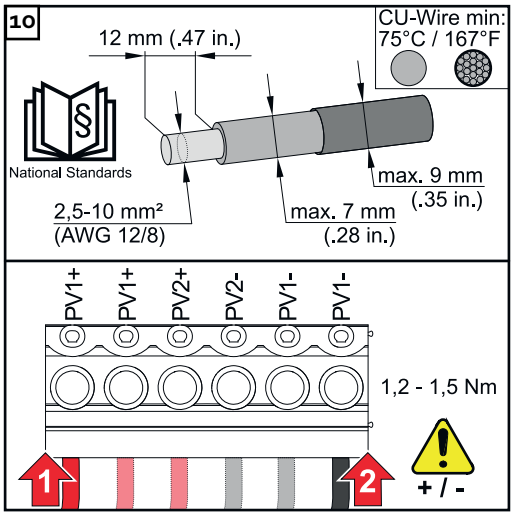

Strip the insulation on the single conductors by 12 mm and secure to the corresponding slot of the terminal on the PC board with a torque of 1.2 - 1.5 Nm.

IMPORTANT!
The cable cross-section must be selected according to the specifications for the respective inverter power category (see chapter **Permissible cables for the electrical connection** on page **67**).

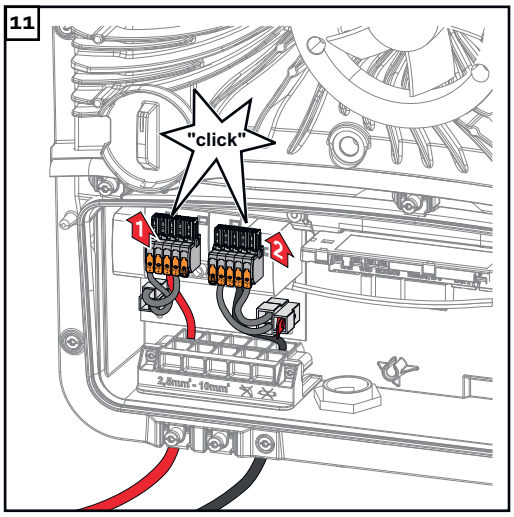

Push the DC push-in terminals into the corresponding slot until there is an audible click.

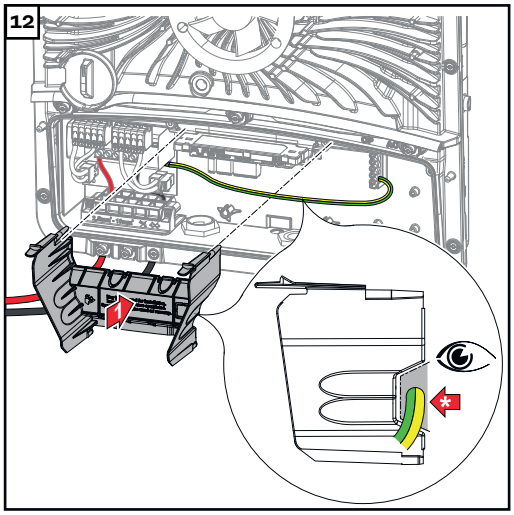

Re-insert the connection area divider.

***** Lay the ground conductor in the integrated cable duct.

IMPORTANT!
Make sure when inserting the connection area divider that the ground conductor is not damaged (kinked, pinched, crushed, etc.).

13

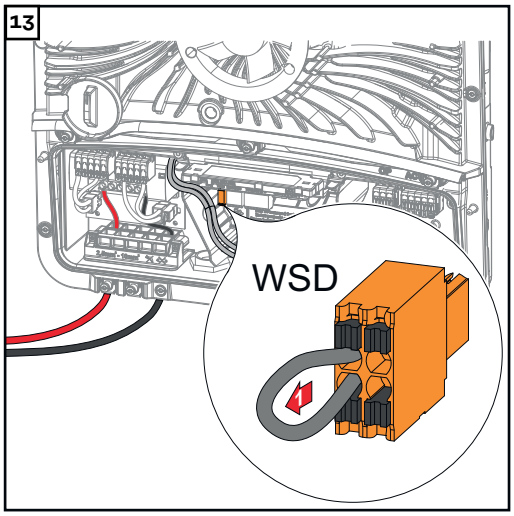

Remove the factory installed bypass on the push-in WSD terminal.

14

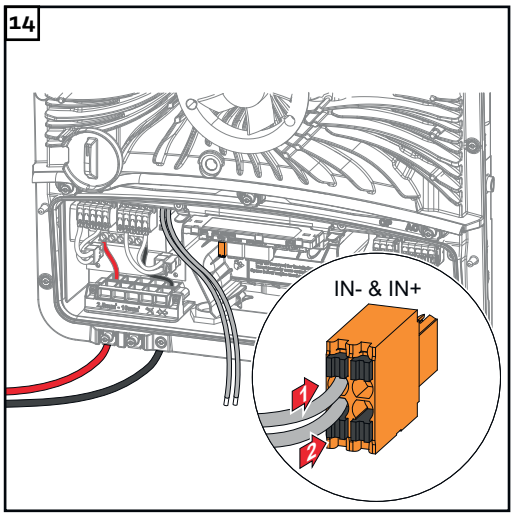

Connect the signal cable to the push-in WSD terminal on the IN- and IN+ slots, observing the labelling.

15

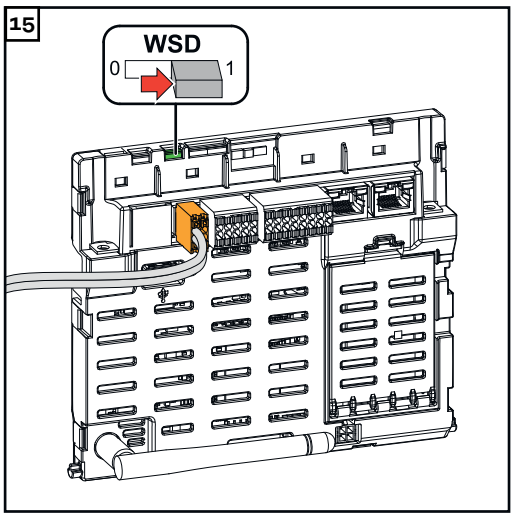

Check whether the WSD switch is in position 1, adjust if necessary (factory setting: position 1).

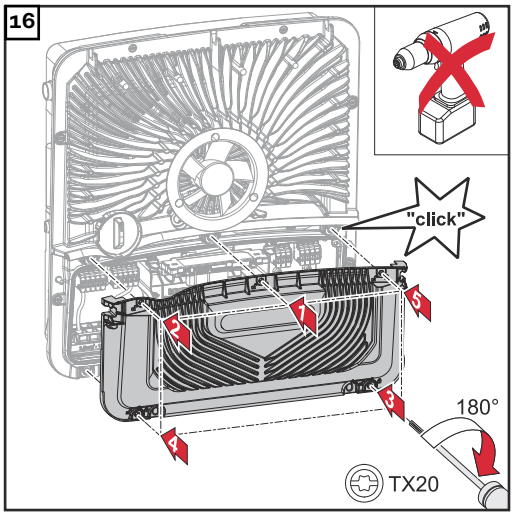

Place the cover on the connection area. Tighten the five screws by rotating them 180° to the right in the indicated order using a screwdriver (TX20).

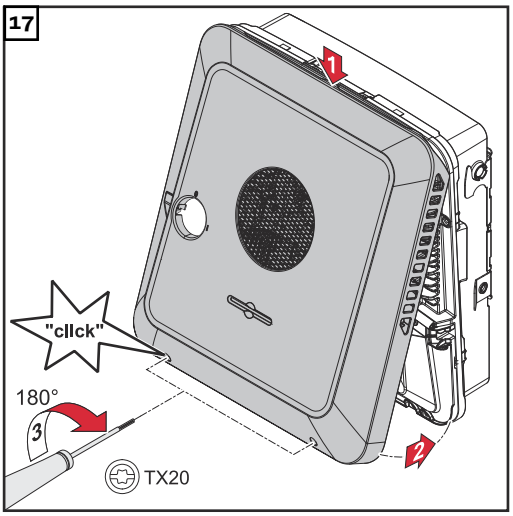

Clip the housing cover onto the inverter from above.
Press on the lower part of the housing cover and tighten the two screws by rotating them 180° to the right using a screwdriver (TX20).

Commissioning the inverter

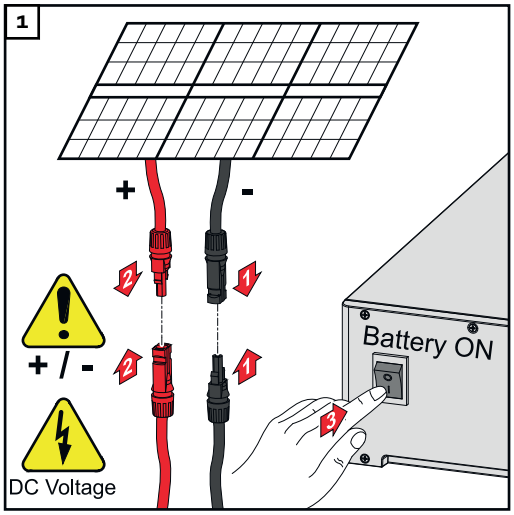

Connect the solar module strings (+/-).
Switch on the battery connected to the inverter.

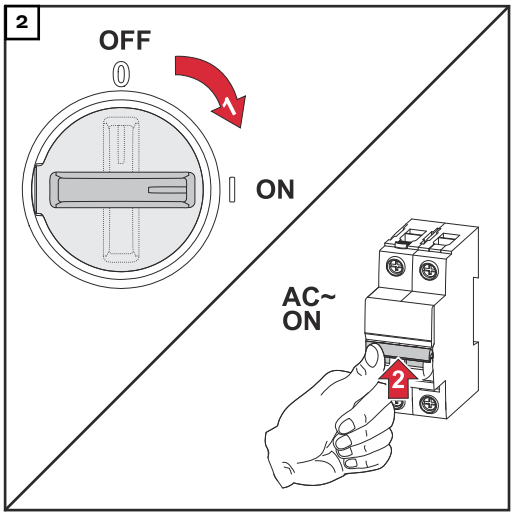

Set the DC disconnector to the "On" switch position. Switch on the automatic circuit breaker.

DC Connector Kit GEN24

General

The DC Connector Kit GEN24 (item no.: 4,240,046) enables the connection of PV connection strings with a total current above 25 A.

General comments regarding PV modules

To enable suitable PV modules to be chosen and to use the inverter as efficiently as possible, it is important to bear the following points in mind:

- If insolation is constant and the temperature is falling, the open-circuit voltage of the PV modules will increase. The open-circuit voltage must not exceed the maximum permissible system voltage. If the open-circuit voltage exceeds the specified values, the inverter will be destroyed and all warranty claims will be forfeited.
- The temperature coefficients on the data sheet of the PV modules must be observed.
- Exact values for sizing the PV modules can be obtained using suitable calculation tools, such as the **Fronius Solar.creator**.

IMPORTANT!
Before connecting up the PV modules, check that the voltage for the PV modules specified by the manufacturer corresponds to the actual measured voltage.

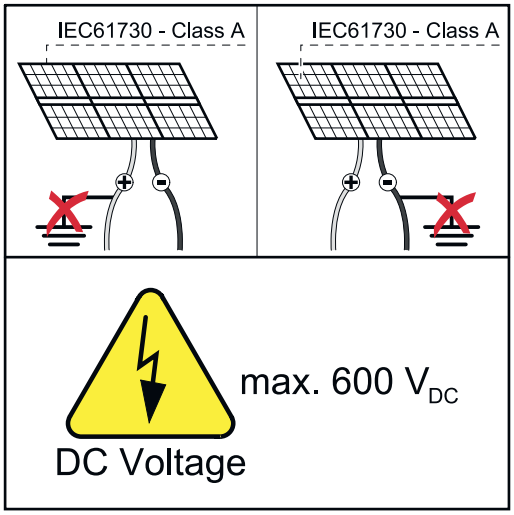

IMPORTANT!
The PV modules connected to the inverter must comply with the IEC 61730 Class A standard.

IMPORTANT!
Solar module strings must not be earthed.

Safety

⚠ WARNING!

Danger due to incorrect operation and incorrectly performed work.
This can result in serious injury and damage to property.

- ▶ Commissioning as well as maintenance and service work in the power module of the inverter must only be carried out by service personnel trained by Fronius and only within the scope of the respective technical regulations.
- ▶ Read the Installation and Operating Instructions before installing and commissioning the equipment.

⚠ WARNING!

Danger due to grid voltage and DC voltage from solar modules that are exposed to light.
This can result in serious injury and damage to property.
- ▶ Ensure that the AC and DC side of the inverter are de-energised before carrying out any connection, maintenance or service tasks.
- ▶ Only an authorised electrical engineer is permitted to connect this equipment to the public grid.

⚠ WARNING!

Danger due to damaged and/or contaminated terminals.
This can result in serious injury and damage to property.
- ▶ Before making any connections, check the terminals for damage and contamination.
- ▶ Remove contamination in the de-energized state.
- ▶ Have defective terminals repaired by an authorised specialist.

Scope of supply

The DC Connector Kit GEN24 is an optional extra and can be retrofitted to the inverter.

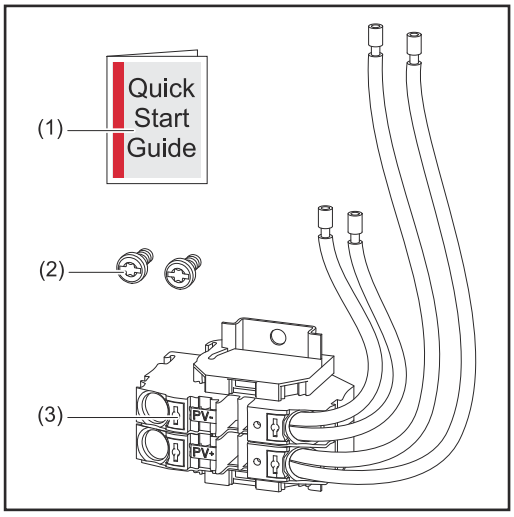

1. User Information
2. 2 TX20 screws
3. DC Connector Kit GEN24

De-energising the inverter

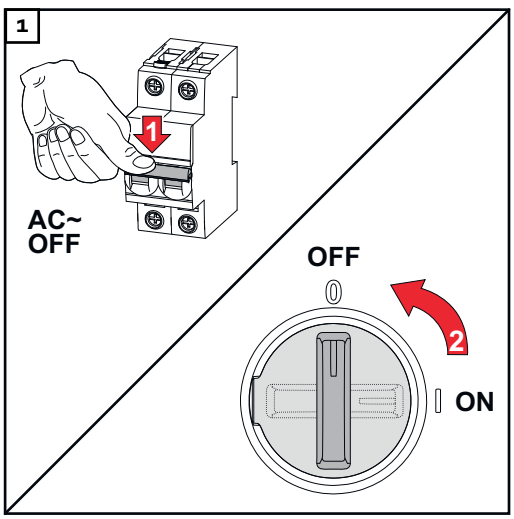

Turn off the automatic circuit breaker. Set the DC disconnector to the "Off" switch position.

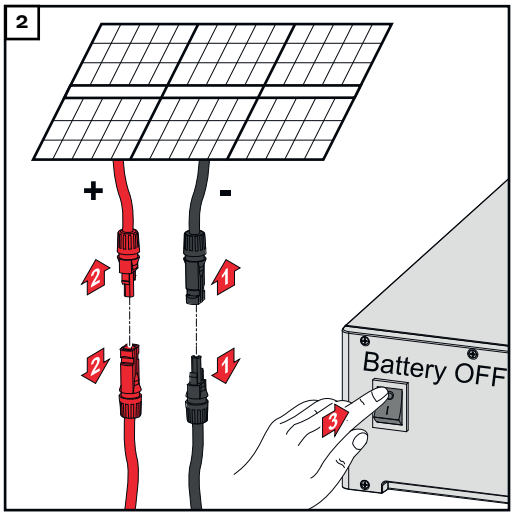

Disconnect connections from the solar module strings (+/-). Switch off the battery connected to the inverter.

Wait for the capacitors of the inverter to discharge (2 minutes).

Installation

⚠ CAUTION!

Danger due to insufficiently dimensioned DC cables.
Damage to the inverter due to thermal overload can result.
▶ When dimensioning the DC cables, adhere to the specifications in chapter **Permissible cables for the electrical connection** on page **67**.

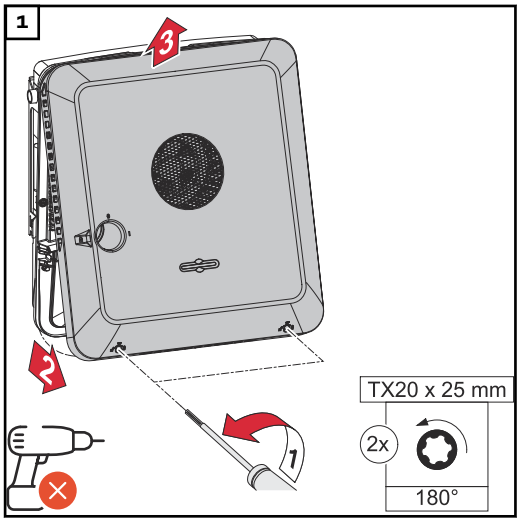

Loosen the 2 screws on the underside of the housing cover by rotating them 180° to the left using a screwdriver (TX20). Then lift the housing cover away from the inverter at the bottom and detach from above.

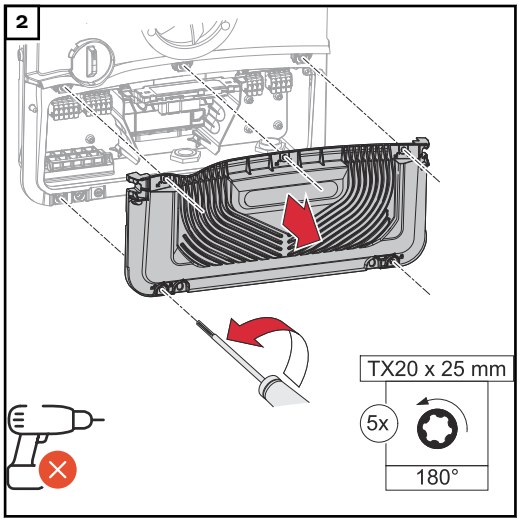

Loosen the 5 screws of the connection area cover by rotating them 180° to the left using a screwdriver (TX20). Remove the connection area cover from the device.

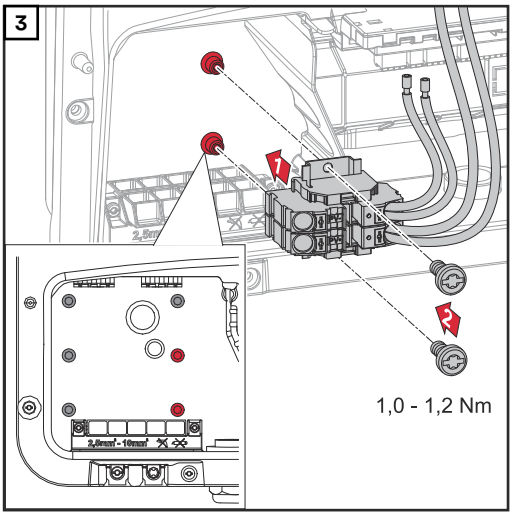

Insert the DC Connector GEN24 into the inverter and secure with the two screws (TX20) supplied at a torque of 1.0 - 1.2 Nm.

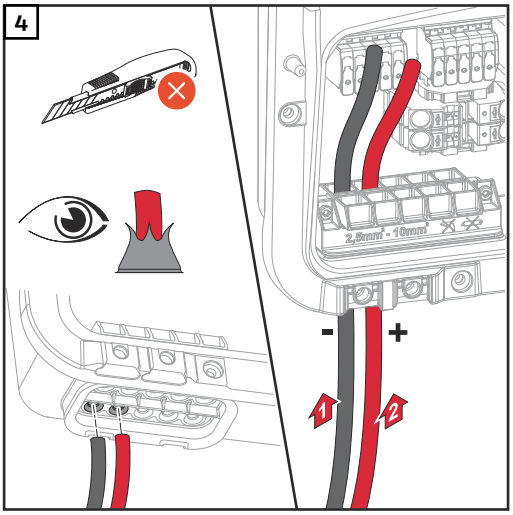

Manually push the DC cables through the DC bushings.

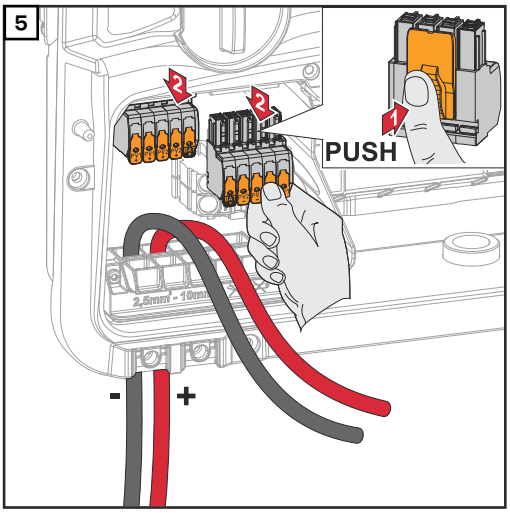

Press the lock on the back of the terminal and pull off the DC terminals.

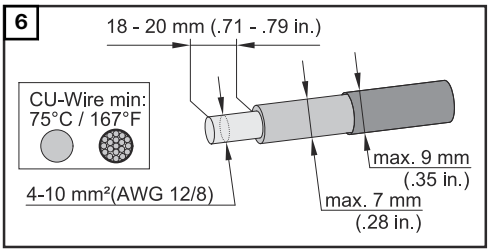

Strip the insulation of the single conductors by 18 – 20 mm.
Select the cable cross section in accordance with the instructions in **Permissible cables for the electrical connection** from page **67**.

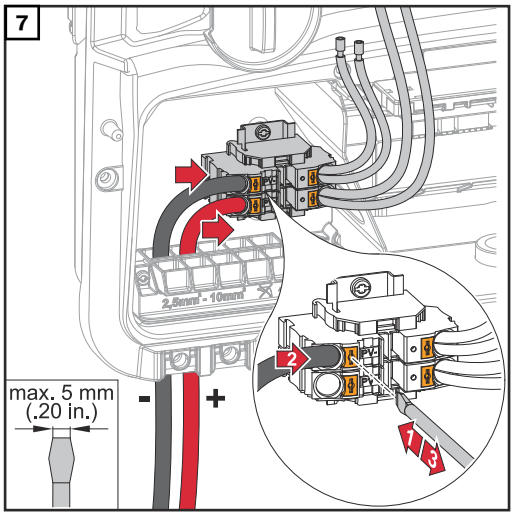

Use a slotted screwdriver to push in the lock on the terminal. Insert the stripped single conductor into the slot provided, in each case as far as it will go. Then withdraw the slotted screwdriver from the lock.

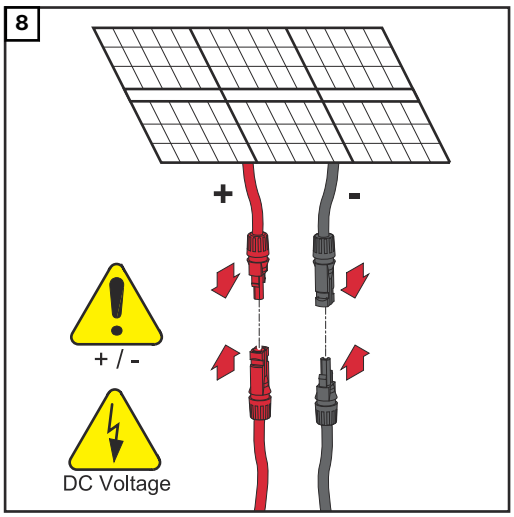

Connect the solar module strings (+/-).

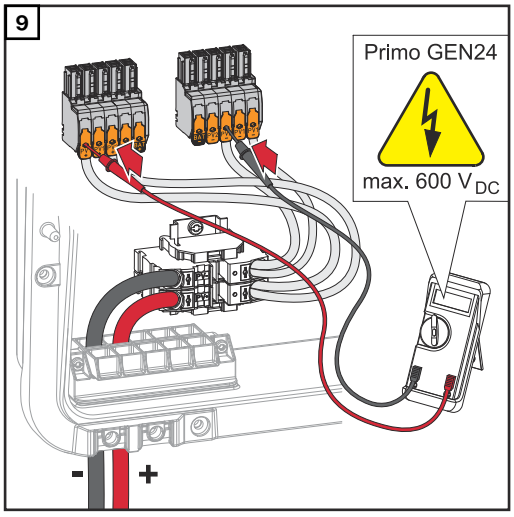

Use a suitable measuring instrument to check the voltage and polarity of the DC cabling.

⚠ CAUTION!

Danger due to polarity reversal at the terminals.
This may result in severe damage to the inverter.

▶ Check the voltage (**max. 600 V_{DC}**) and polarity of the DC cabling with a suitable measuring instrument.

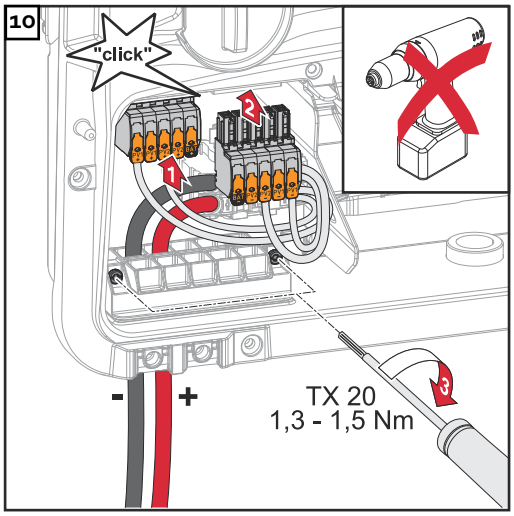

Insert the DC terminals into the respective slot until they engage. Fasten the screws of the strain-relief device to the housing using a screwdriver (TX20) and a torque of 1.3 – 1.5 Nm.

NOTE!

Risk due to overtorque at the strain-relief device.
This may result in damage to the strain-relief device.

▶ Do not use a drill driver.

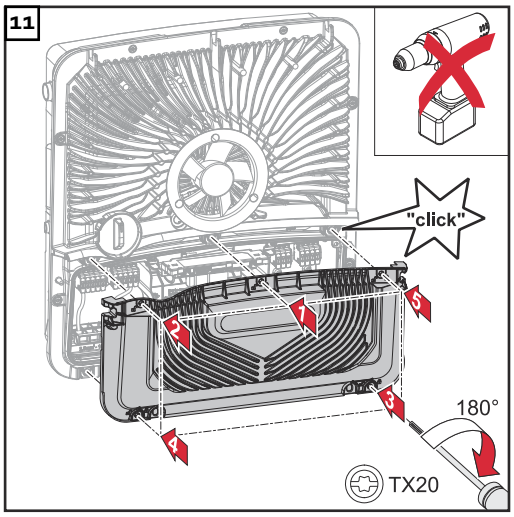

Place the cover on the connection area. Tighten the 5 screws by rotating them 180° to the right in the indicated order using a screwdriver (TX20).

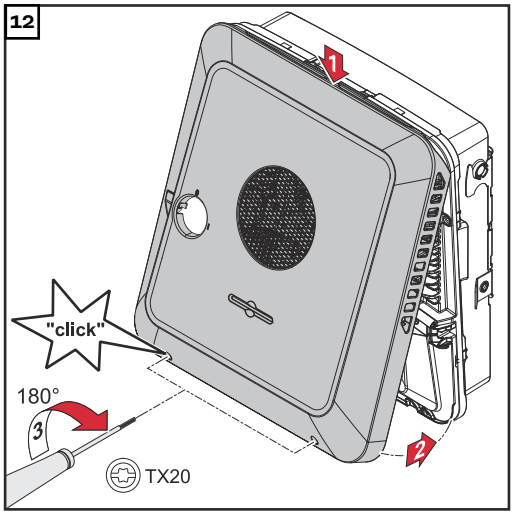

Clip the housing cover onto the inverter from above.
Press on the lower part of the housing cover and tighten the 2 screws by rotating them 180° to the right using a screwdriver (TX20).

Commissioning the inverter

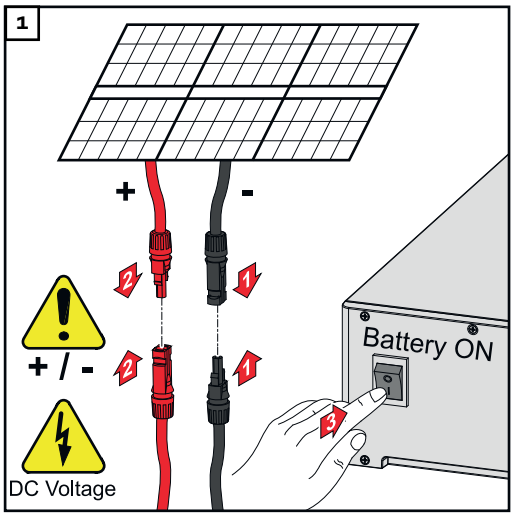

Connect the solar module strings (+/-). Switch on the battery connected to the inverter.

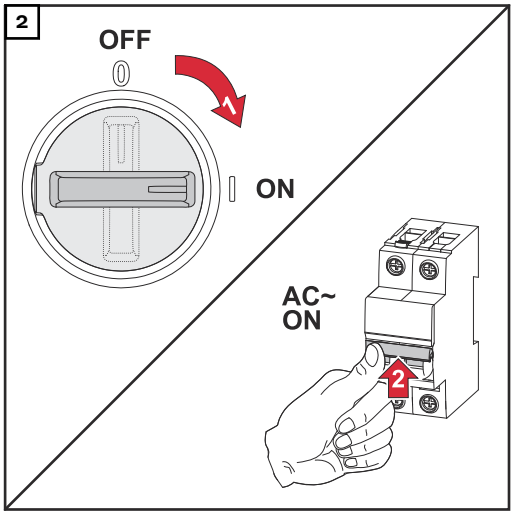

Set the DC disconnector to the "On" switch position. Switch on the automatic circuit breaker.

PV Point Comfort

Safety

⚠ WARNING!

Danger due to electrical voltage on live parts of the photovoltaic system.
This can result in serious injury and damage to property.
- ▶ Disconnect live parts of the photovoltaic system on all pins and on all sides.
- ▶ Secure against re-activation in accordance with national regulations.
- ▶ Allow the capacitors of the inverter to discharge (2 minutes).
- ▶ Check that the inverter is de-energised with a suitable measuring device.

⚠ WARNING!

Danger due to work that has been carried out incorrectly.
This can result in serious injury and damage to property.
- ▶ Installing and connecting an option must only be carried out by service personnel trained by Fronius and only within the scope of the respective technical regulations.
- ▶ Follow the safety rules.

⚠ WARNING!

Danger due to damaged and/or contaminated terminals.
This can result in serious injury and damage to property.
- ▶ Before making any connections, check the terminals for damage and contamination.
- ▶ Remove contamination in the de-energized state.
- ▶ Have defective terminals repaired by an authorised specialist.

NOTE!

The continuous supply via the PV Point depends on the available PV power.
If the solar modules are not supplying enough power, interruptions may occur.
- ▶ Do not connect any loads that require an uninterruptible supply.

IMPORTANT!
The valid national laws, standards and provisions, as well as the specifications of the relevant grid operator are to be taken into account and applied.
It is highly recommended that the specific installation be agreed with the grid operator and explicitly approved by this operator. This obligation applies to system constructors in particular (e.g. installers).

Scope of supply

The PV Point Comfort is an optional extra and can be retrofitted to the inverter.

For technical data, see "**Technical data**" on page **182**.

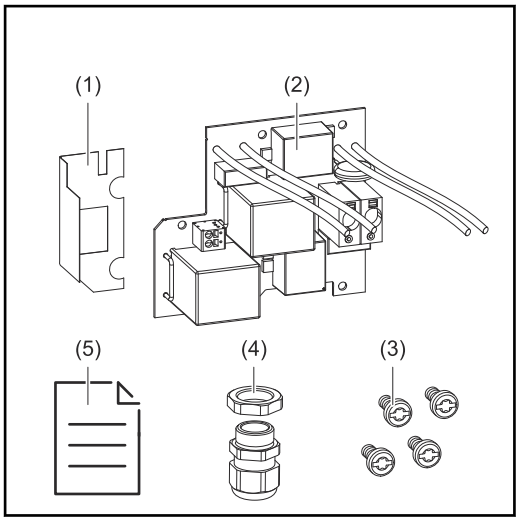

1. Insulation film
2. PV Point Comfort
3. 4 TX20 screws
4. Cable gland
5. User Information

De-energising the inverter

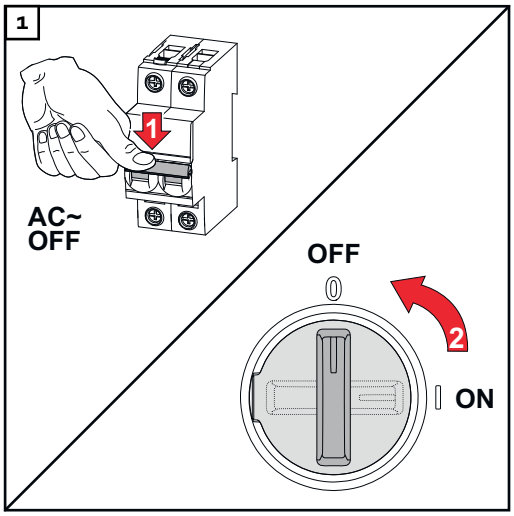

Turn off the automatic circuit breaker. Set the DC disconnector to the "Off" switch position.

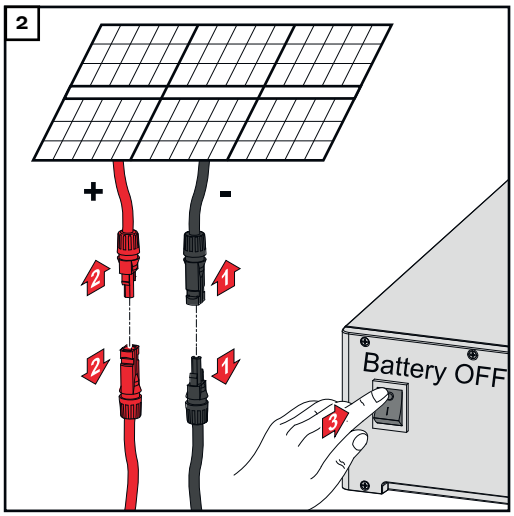

Disconnect connections from the solar module strings (+/-). Switch off the battery connected to the inverter.

Wait for the capacitors of the inverter to discharge (2 minutes).

⚠ CAUTION!

Danger due to insufficiently dimensioned ground conductor.
Damage to the inverter due to thermal overload can result.
▶ The national standards and guidelines must be observed for dimensioning the ground conductor.

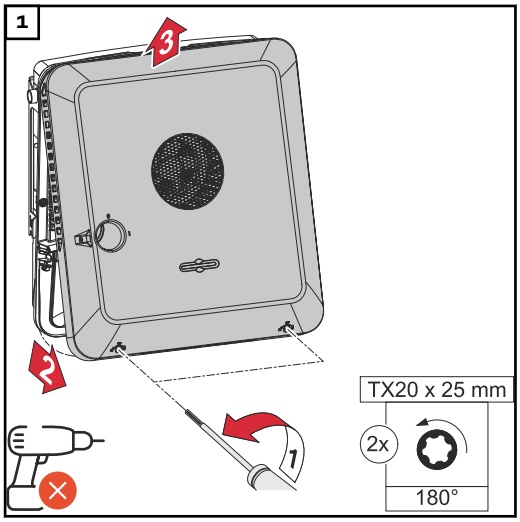

Loosen the 2 screws on the underside of the housing cover by rotating them 180° to the left using a screwdriver (TX20). Then lift the housing cover away from the inverter at the bottom and detach from above.

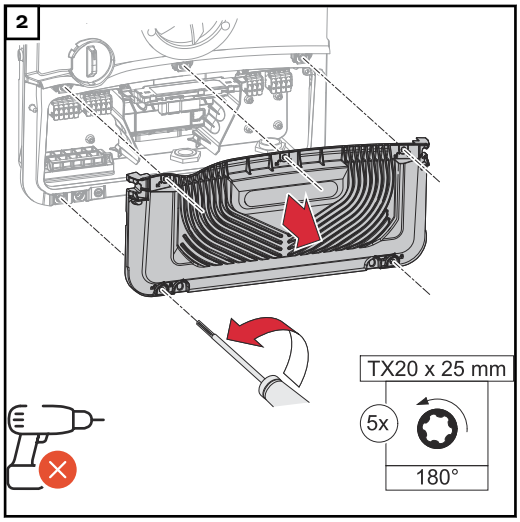

Loosen the 5 screws of the connection area cover by rotating them 180° to the left using a screwdriver (TX20). Remove the connection area cover from the device.

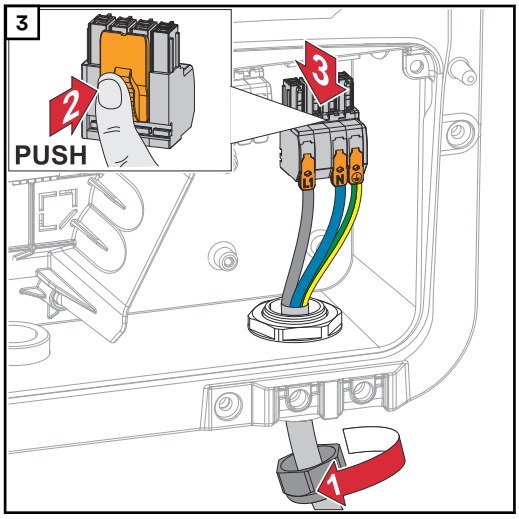

Press the lock on the back of the terminal and remove the AC terminals. Loosen the cable gland.

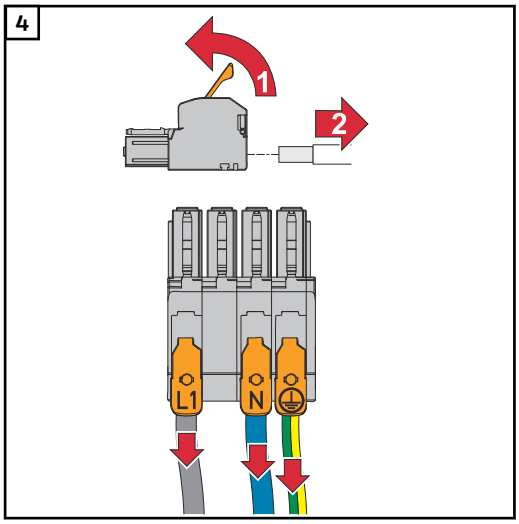

Disconnect the individual conductors from the AC terminal (only necessary if the installation already exists).

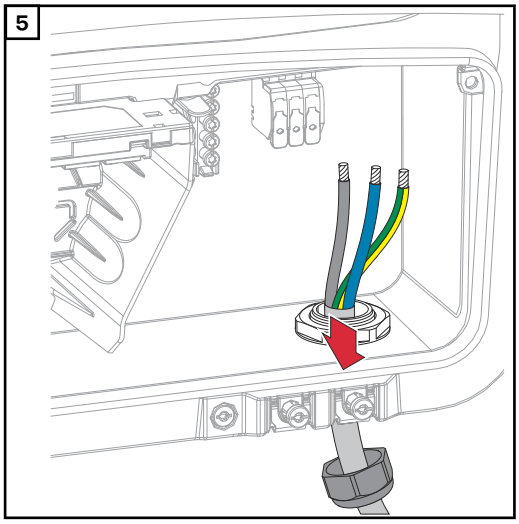

Remove the mains cable from the inverter.

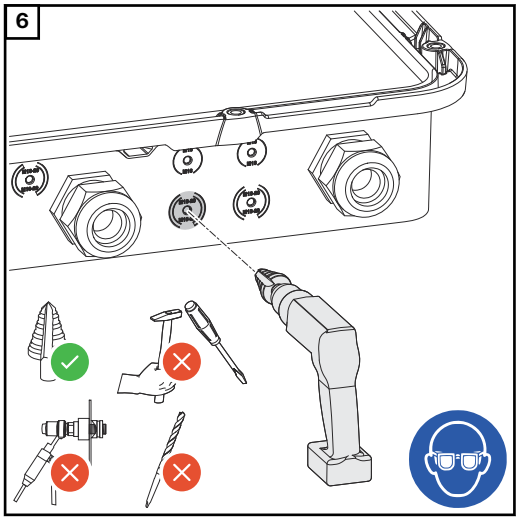

Drill out the optional cable guide with a step drill.

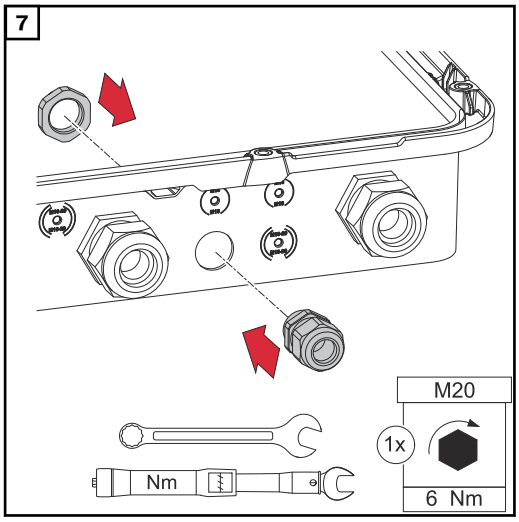

Insert the cable gland into the hole and tighten to a torque of 6 Nm.

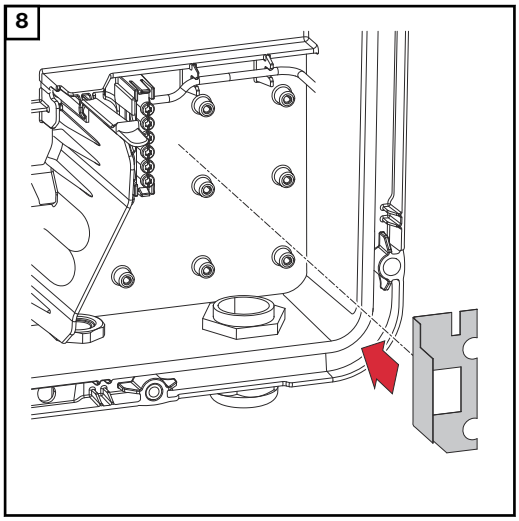

Insert the insulating film on the right side of the ground electrode terminal.

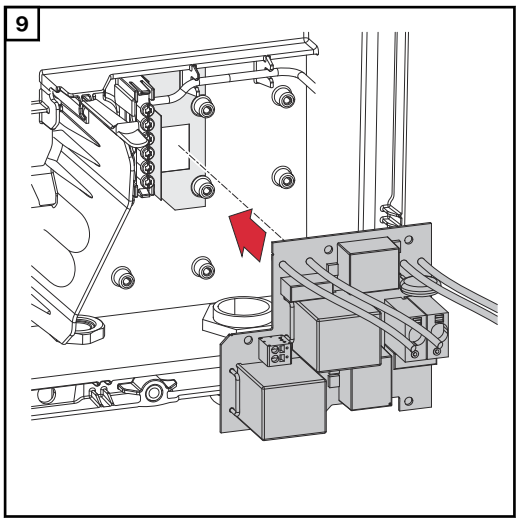

Insert the PC board into the inverter.

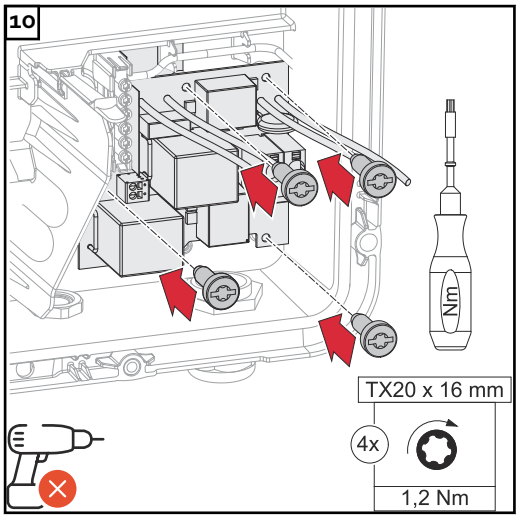

Fasten the PC board with the 4 screws (TX20) supplied and tighten to a torque of 1.2 Nm.

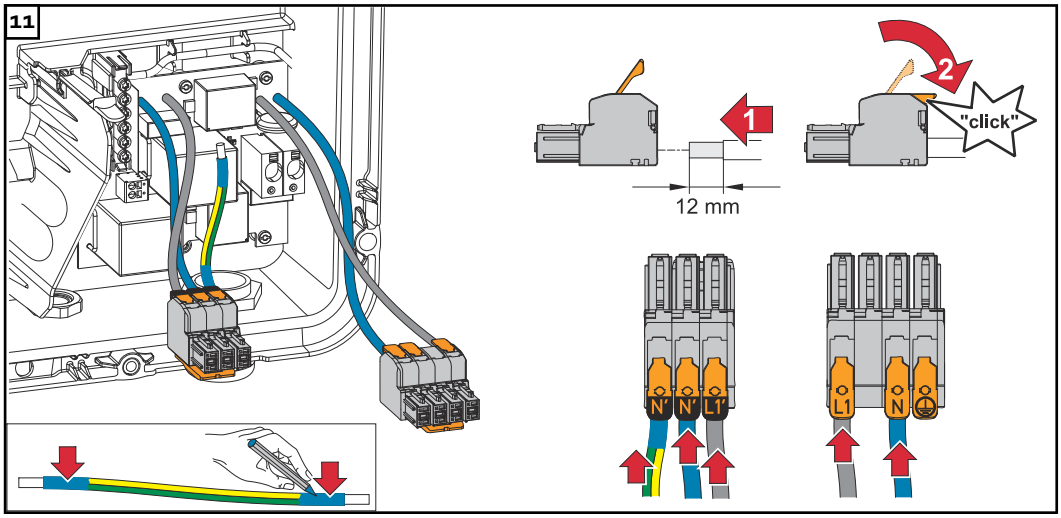

Strip the insulation of the single conductors by 12 mm. Lift to open the AC terminal's operating lever and insert the stripped single conductor into the slot provided, all the way up to the stop. Then close the operating lever until it engages.

IMPORTANT!
The PEN conductor must be produced with ends that are permanently marked blue, according to the national provisions, and have a cross section of 10 mm².

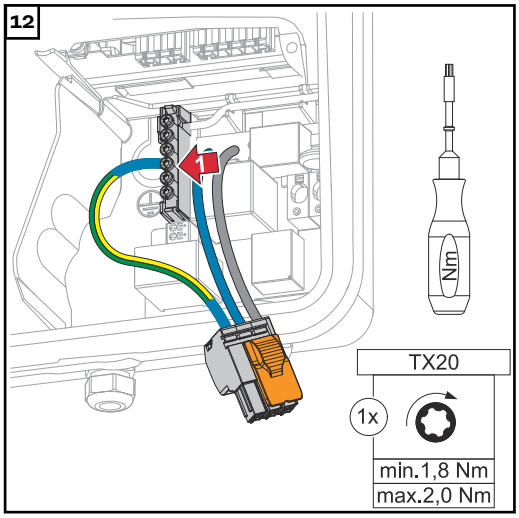

Fasten the PEN conductor to the third input of the ground electrode terminal from below using a screwdriver (TX20) and a torque of 1.8 – 2 Nm.

13

Inverter		Ø	
Primo GEN24 3 - 6 kW	Cu	2,5 - 10 mm²	12 mm
Primo GEN24 8 - 10 kW	Cu	2,5 - 16 mm²	19 mm
PV Point		Ø	
	Cu	1,5 - 2,5 mm²	12 mm

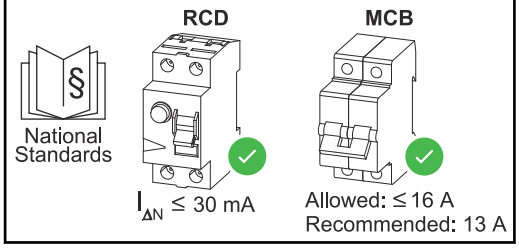

Strip the single conductors according to the specifications based on the power category of the inverter.
The cable cross-section must be selected according to the specifications for the respective power category of the inverter (see chapter **Permissible cables for the electrical connection** on page **67**).

IMPORTANT!
If necessary, an automatic circuit breaker with max. 16 A can also be used for protection. In backup power operation, a maximum of 13 A can be provided.
The residual current circuit breaker and automatic circuit breaker must be designed according to the national provisions

14

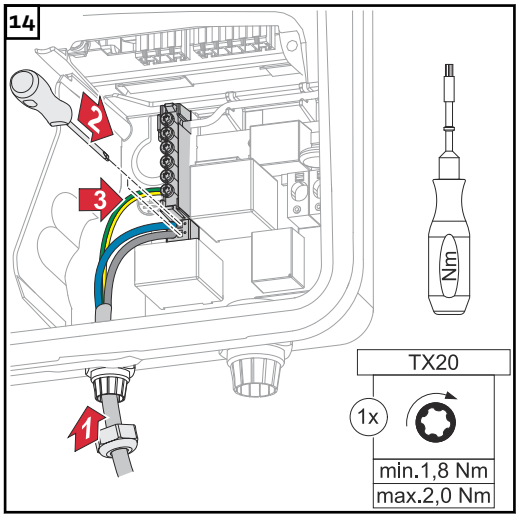

Connect the phase/neutral conductors to the terminals provided. Fasten the ground conductor at the first input to the ground electrode terminal using a screwdriver (TX20) and a torque of 1.8 – 2 Nm.

IMPORTANT!
The ground conductor must be connected with a movement loop so that if the cable gland fails, the ground conductor is disconnected last.

15

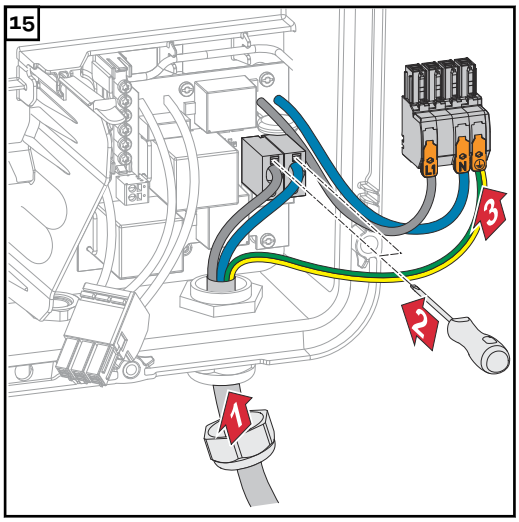

Connect the stripped phase/neutral conductors to the terminals provided.

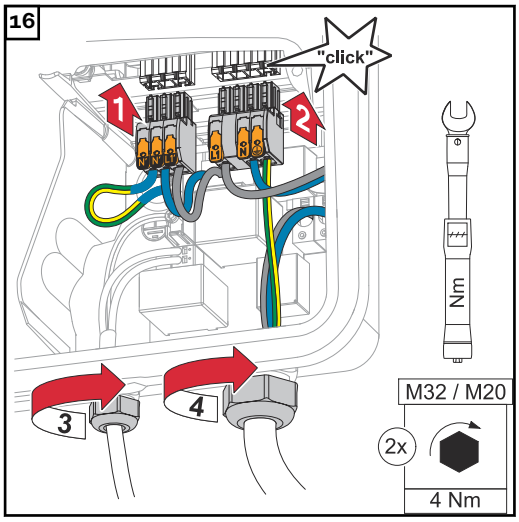

Insert the terminals into the respective slot until they engage. Fasten the union nut of the cable gland to a torque of 4 Nm.

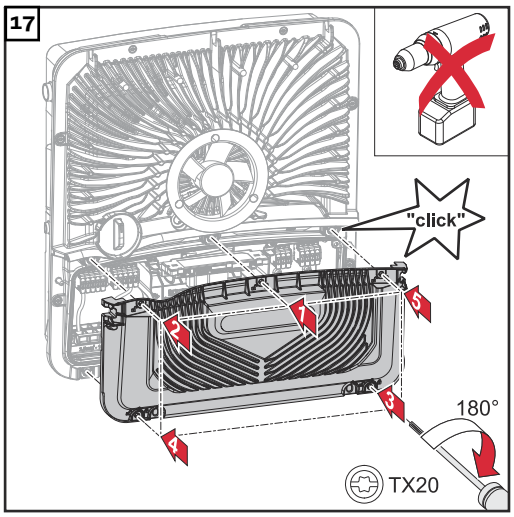

Place the cover on the connection area. Tighten the 5 screws by rotating them 180° to the right in the indicated order using a screwdriver (TX20).

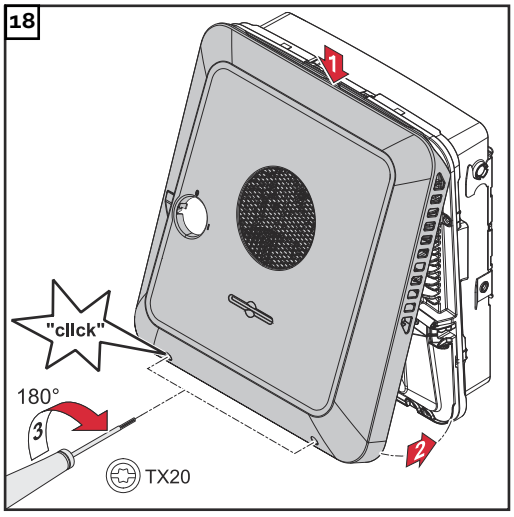

Clip the housing cover onto the inverter from above.
Press on the lower part of the housing cover and tighten the 2 screws by rotating them 180° to the right using a screwdriver (TX20).

Commissioning the inverter

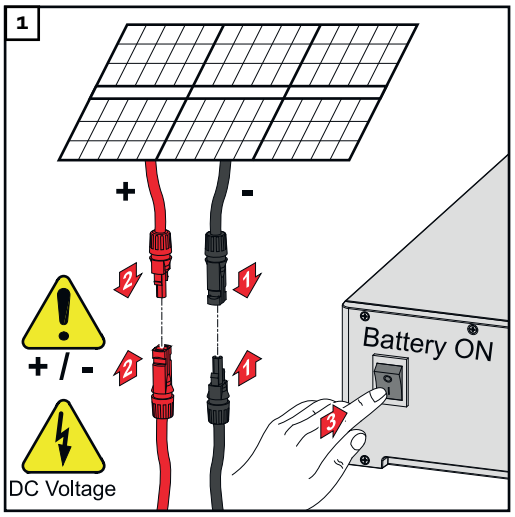

Connect the solar module strings (+/-). Switch on the battery connected to the inverter.

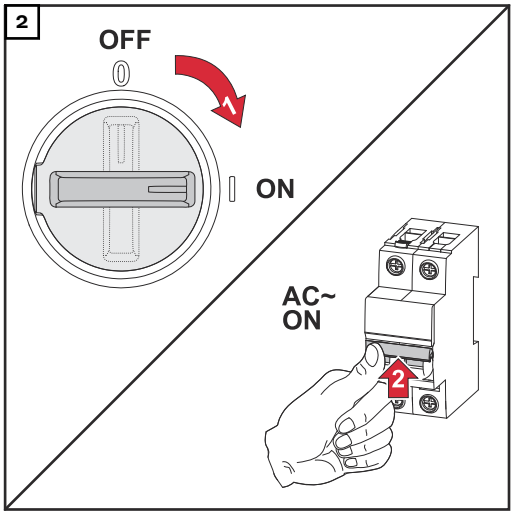

Set the DC disconnector to the "On" switch position. Switch on the automatic circuit breaker.

Configuring PV Point Comfort

Firmware version 1.25.2 or higher is required to commission the PV Point Comfort. Outdated firmware versions could lead to incompatibilities between the inverter and PV Point Comfort. In this case, the inverter firmware should be updated in accordance with the instructions in **Update** on page **120**.

1. Access the user interface of the inverter.
   - Open your web browser.
   - In the address bar of the browser, enter the IP address (IP address for WLAN: 192.168.250.181, IP address for LAN: 169.254.0.180) or the host and domain name of the inverter and confirm.
   - The user interface of the inverter is displayed.
2. Click the **"Device configuration"** button.
3. Log in to the login area with the **"Technician"** user and the technician password.
4. Open the **"Functions and I/Os"** menu.
5. Enable **"Backup power"** mode.
6. Select **"PV Point"** in the **"Backup power mode"** drop-down list.
7. Click the **"Save"** button to save the settings.

"PV Point" backup power mode has been configured.

Testing backup power mode

After the initial installation and configuration of the backup power operation, it is recommended to test the backup power operation. For test mode, a battery charge of min. 30 % is recommended.

A description on how to run test mode can be found in the **backup power checklist** (https://www.fronius.com/en/search-page, item number: 42,0426,0365).

Appendix

Care, maintenance and disposal

General

The inverter is designed in such a way that no additional maintenance work builds up. Nevertheless, a few points must be considered during operation to ensure that the inverter works perfectly.

Cleaning

Clean the inverter as required with a damp cloth.
Do not use cleaning agents, abrasives solvents or similar to clean the inverter.

Maintenance

Maintenance and servicing may only be carried out by Fronius-trained service technicians.

Safety

The DC disconnector is used only to switch off power to the power stage set.
When the DC disconnector is turned off, the connection area is still energized.

⚠ WARNING!

Danger from grid voltage and DC voltage from PV modules.
This can result in serious injury and damage to property.
- ▶ The connection area must only be opened by an authorised electrician.
- ▶ The separate power stage set area must only be opened by Fronius-trained service technicians.
- ▶ Prior to any connection work, disconnect the inverter on the AC side and the DC side.

⚠ WARNING!

Danger of residual voltage from capacitors.
This can result in serious injury and damage to property.
- ▶ Allow the capacitors of the inverter to discharge (2 minutes).

Operation in dusty environments

NOTE!

If the inverter is operated in dusty environments, dirt may build up on the heat sink and fan.
This may result in a loss of power due to insufficient cooling of the inverter.
- ▶ Make sure that the ambient air can always flow through the inverter's ventilation slots unimpeded.
- ▶ Remove any build-up of dirt on the heat sink and the fan.

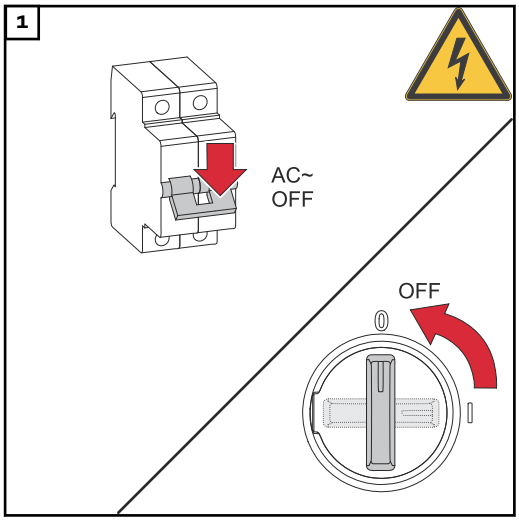

Switch off power to the inverter and wait for the specified time until the capacitors have discharged and the fan has shut down.
Turn the DC disconnector to the "Off" switch position.

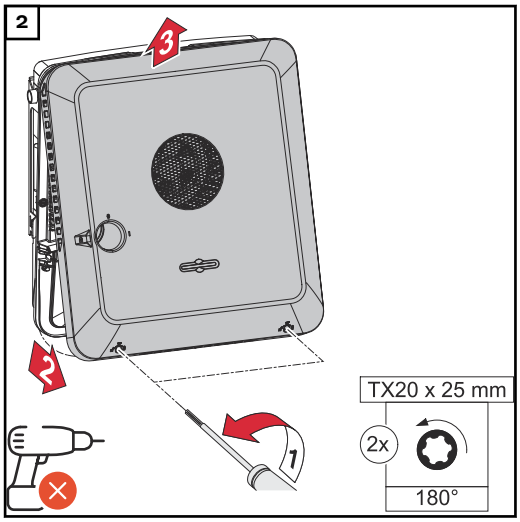

Loosen the screws on the underside of the housing cover by rotating them 180° to the left using a screwdriver (TX20). Then lift the housing cover away from the inverter at the bottom and detach from above.

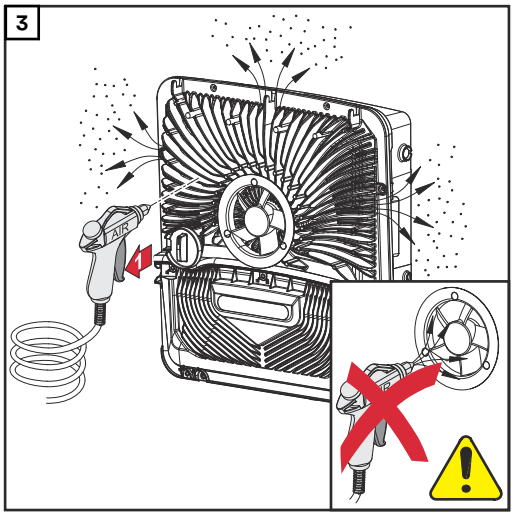

Remove any build-up of dirt on the heat sink and fan using compressed air, or a cloth or brush.

NOTE!

Risk due to damage to the fan bearing from improper cleaning.
Excessive speed and pressure on the fan bearing can cause damage.

- ▶ Block the fan and clean it with compressed air.
- ▶ When using a cloth or brush, clean the fan without applying pressure to the fan.

To start up the inverter again, follow the steps listed above in reverse order.

Disposal

Waste electrical and electronic equipment must be collected separately and recycled in an environmentally responsible manner in accordance with the EU Directive and national law. Used equipment must be returned to the distributor or through a local, authorised collection and disposal system. Proper disposal of the old device promotes sustainable recycling of material resources. Ignoring this may lead to potential health/environmental impacts.

Packaging materials
Collected separately. Check your municipality's regulations. Reduce the volume of the box.

Guarantee provisions

Fronius manufacturer's warranty

Detailed, country-specific warranty terms are available on the internet: www.fronius.com/solar/warranty

To obtain the full warranty period for your newly installed Fronius inverter or storage system, please register at: www.solarweb.com.

Components for switching to backup power

Components for automatic Full Backup backup power changeover

Device name	Current transformer	Item number
Fronius Smart Meter 63A-1	✗	43,0001,1477
Fronius Smart Meter 50kA-3	✓	43,0001,1478
Fronius Smart Meter TS 100A-1	✗	43,0001,0045
Fronius Smart Meter TS 5kA-3	✓	43,0001,0046
Fronius Smart Meter WR	✓	43,0001,3591

Grid and system protection unit (fuse protection: 1-pin, 6 A)Other manufacturers and types are permissible if they are technically and functionally identical to the examples below:

- VMD460-NA-D-2 (Bender GmbH & Co. KG)
- RE-NA003-M64 (Tele Haase Steuergeräte Ges.m.b.H.)

K1 and K2 - installation contactor with auxiliary contact	
Number of pins	1-pin or 2-pin(depending on the cabling variant)
Rated current	depends on house connection
Coil voltage	230 V AC
Rated frequency	50/60 Hz
Coil fuse	6 A
Min. short circuit current	3 kA (make contacts)
Test standard	IEC 60947-4-1
Auxiliary contact	
Number of NC contacts	1
Switching voltage	12-230 V @ 50/60 Hz
Min. nominal current	1 A
Min. short circuit current	1 kA
Examples of contactors and relays	ISKRA IK63-40 / Schrack BZ326461

Buffer power supply for Fault Ride Through cabling variant.Other manufacturers and types are permissible if they are technically and functionally identical to the examples below:

- BKE JS-20-240/DIN_BUF

K1 and K2 - DC installation contactor with auxiliary contact **(Fault Ride Through)**	
Number of pins	1-pin or 2-pin(depending on the cabling variant)
Rated current	depends on house connection
Coil voltage	24 V_{DC}
Min. short circuit current	3 kA (make contacts)
Test standard	IEC 60947-4-1
Auxiliary contact	
Number of NC contacts	1
Switching voltage	24 V_{DC}
Min. nominal current	1 A
Min. short circuit current	1 kA
Examples of contactors and relays	Finder 22.64.0.024.4710

K3 - modular relay	
Number of changeover contacts	2
Coil voltage	12 V DC
Test standard	IEC 60947-4-1
Examples of contactors and relays	Finder 22.23.9.012.4000 / Schrack relay RT424012 (bracket RT17017, relay base RT78725)

K4 and K5 - installation contactor	
Number of NC contacts	2 (25 A)
Coil voltage	230 V AC (2P)
Rated frequency	50/60 Hz
Coil fuse	6 A
Min. short circuit current	3 kA (make contacts)
Test standard	IEC 60947-4-1
Examples of contactors and relays	ISKRA IKA225-02

Components for manual Full Backup backup power changeover

Device name	Current transformer	Item number
Fronius Smart Meter 63A-1	✕	43,0001,1477

Device name	Current trans-former	Item number
Fronius Smart Meter TS 100A-1	⊗	43,0001,0045

Q1 manual changeover switch	
Number of pins	3-pin or 4-pin(depending on the cabling variant)
Rated current	depends on house connection
Coil voltage	230/400 V_{AC}
Rated frequency	50/60 Hz
Test standard	IEC 60947-4-1
Example	HIM306 / HIM406
Example	KA63B.T903.VE2 / KA40B.T904.VE2.F437

Status codes and remedy

Display

Status codes are displayed on the user interface of the inverter in the **"System"** → **"Event Log"** menu or in the user menu under **"Notifications"** or in Fronius Solar.web*.

* with corresponding configuration, see chapter **Fronius Solar.web** on page **17**.

Status Codes

1006 - ArcDetected (operation LED: flashes yellow)

Cause: An arc on the PV system was detected.

Remedy: No action required. Feed-in mode is started again automatically after 5 minutes.

1030 - WSD Open (operation LED: lights up red)

Cause: A device connected in the WSD chain has interrupted the signal line (e.g. a surge protective device) or the bypass ex works has been removed and no trigger device has been installed.

Remedy: If the SPD surge protective device is triggered, the inverter must be repaired by an authorised specialist.

OR: Install the bypass ex works or a trigger device.

OR: Set the WSD (wired shutdown) switch to position 1 (WSD primary device).

⚠ WARNING!

Danger due to work that has been carried out incorrectly.
This can result in serious injury and damage to property.
- ▶ Installing and connecting a surge protective device (SPD) must only be carried out by service personnel trained by Fronius and only within the scope of the respective technical regulations.
- ▶ Follow the safety rules.

1173 - ArcContinuousFault (operation LED: lights up red)

Cause: An arc on the PV system was detected and the maximum number of automatic switch-ons within 24 hours was reached.

Remedy: Press and hold the sensor on the inverter for 3 seconds (max. 6 seconds).

OR: Confirm the status **"1173 - ArcContinuousFault"** in the **"System"** → **"Event Log"** menu area on the user interface of the inverter.

OR: Confirm the status **"1173 - ArcContinuousFault"** in the **"Notifications"** user menu on the user interface of the inverter.

⚠ CAUTION!

Danger from damaged components of the photovoltaic system
This can result in severe personal injury/damage to property.
- ▶ Before the status **"1173 - ArcContinuousFault"** is confirmed, the entire photovoltaic system in question must be checked for possible damage.
- ▶ Have damaged components repaired by qualified personnel.

1191 - AfciDataTransfer (operation LED: flashes yellow)

Cause: An arc on the PV system was detected.

Remedy: No action required.

Technical data

Fronius Primo GEN24 8.0 / 8.0 Plus

DC input data	
MPP voltage range (at rated power)	260-480 V
Max. input voltage at 1000 W/m² / -10°C in an open circuit	600 V
Min. input voltage	65 V
Feed-in start-up input voltage in grid operation [5)]	80 V
Max. input current PV 1 PV 2	 22.0 A 22.0 A
Max. short circuit current of module array ($I_{SC\ PV}$) PV 1 PV 2	 41.25 A 36 A
Max. total short circuit current of module array ($I_{SC\ PV1} + I_{SC\ PV2} = I_{SC\ max}$)	77.25 A
Max. inverter backfeed current to the array [3)] PV 1 PV 2	 41.25 A 36 A
Number of inputs - PV 1	2
Number of inputs - PV 2	2
Maximum capacity of the module array against earth	1600 nF
Insulation resistance test limit value between module array and earth (on delivery) [10)]	100 kΩ
Adjustable range of insulation resistance test between module array and earth [9)]	10-10,000 kΩ
Limit value and tripping time of the sudden residual current monitoring (on delivery)	30 / 300 mA / ms 60 / 150 mA / ms 90 / 40 mA / ms
Limit value and tripping time of the continuous residual current monitoring (on delivery)	300 / 300 mA / ms
Adjustable range of continuous residual current monitoring [9)]	30-300 mA
Cyclic repetition of the insulation resistance test (on delivery)	24 h
Adjustable range for the cyclic repetition of the insulation resistance test	-

DC input data, battery	
Max. voltage	455 V
Min. voltage	150 V
Max. current	22 A
Max. output	8000 W
DC inputs	1

AC input/output data	
Rated power (P_{nom})	8000 W
Max. output power	8000 W
Rated apparent power	8000 VA
Nominal grid voltage	1 ~ NPE 220V / 230V / 240 V
Min. grid voltage	155 V [1)]
Max. grid voltage	270 V [1)]
Max. output current	45.45 A
Current (inrush) [6)]	20 A / 1.3 ms
Nominal frequency	50/60 Hz [1)]
Nominal frequency for Full Backup	53/63 Hz [1)]
Initial short circuit alternating current / phase I_K	45.5 A
Total harmonic distortion	< 3 %
Power factor cos phi [2)]	0.8-1 (adjustable)
Max. permitted mains impedance Z_{max} at PCC [4)]	None
Maximum output fault current / duration	29 A / 3 ms

AC output data, PV Point / PV Point Comfort	
Max. output power	4133 W (for 5 s)
Rated power	3000 W
Nominal output current	13 A
Nominal grid voltage	1 ~ NPE 220 V / 230 V / 240 V
Nominal frequency	53/63 Hz [1)]
Switching time	< 90 s
Power factor cos phi [2)]	0-1

AC output data, Full Backup	
Max. output power	11,024 W (for 5 s)
Rated power	8000 W
Nominal output current	34.8 A

AC output data, Full Backup	
Nominal grid voltage	1 ~ NPE 220 V 1 ~ NPE 230 V 1 ~ NPE 240 V
Nominal frequency for Full Backup	53/63 Hz [1)]
Switching time	< 90 s
Power factor cos phi [2)]	0-1

General data	
Maximum efficiency	97.4%
European efficiency ($U_{mpp\ nom}$)	96.9%
European efficiency ($U_{mpp\ max}$)	96.4%
European efficiency ($U_{mpp\ min}$)	96.5%
Self-consumption at night	9 W
Cooling	Controlled forced-air ventilation
Protection class	IP 66
Dimensions H x W x D	595 × 529 × 180 mm
Weight	23.5 kg
Inverter topology	Non-insulated transformerless
Permitted ambient temperature	-40 °C - +60 °C
Permissible humidity	0-100% (incl. condensation)
EMC emission class (according to IEC 61000-6-2, IEC 61000-6-3)	B
DC/AC overvoltage category (according to IEC 62109-1)	2 / 3
Pollution degree	2
Sound pressure	47 dB(A) (ref. 20µPa)
Safety class (in accordance with IEC 62103)	1

Protection devices	
DC isolation measurement [11)]	Warning / shutdown at R_{ISO} < 100 kOhm
Overload performance	Operating point shift, power limitation
DC disconnector	Integrated
RCMU [11)]	Integrated
RCMU classification	The software class of the safety platform(s) is specified as a class B control function (single channel with periodic self-test) according to IEC 60730 Annex H.
Active anti-islanding method	Frequency conversion method

Protection devices	
AFCI	Integrated
AFPE (AFCI) classification (according to IEC 63027) [11)]	= F-I-AFPE-1-4-1 Full coverage Integrated AFPE 1 monitored string per input port 4 input ports per channel (MPP1: 2, MPP2: 2) 1 monitored channel

Data communication	
WLAN SMA-RP connection (**FCC ID:** QKWPILOT01 / **IC ID:** 12270A-PILOT01)	802.11b/g/n (WPA, WPA2) Frequency: 2.4 GHz
Ethernet (LAN)	RJ45, 10/100 MBit
Wired shutdown (WSD)	Max. 28 devices / WSD chain Max. distance between two devices = 100 m
Modbus RTU SunSpec (2x)	RS485 2-wire
Voltage level of digital inputs	Low: min. 0 V - max. 1.8 V High: min. 4.5 V - max. 28.8 V
Input currents of digital inputs	Depending on the input voltage; input resistance = 70 kOhm
Total power for digital output (internal supply)	6 W at 12 V (USB not connected)
Power per digital output (external supply)	1 A at >12.5 V - 24 V (max. 3 A in total)
Datalogger/web server	Integrated

Fronius Primo GEN24 10.0 / 10.0 Plus

DC input data	
MPP voltage range (at rated power)	260-480 V
Max. input voltage at 1000 W/m² / -10°C in an open circuit	600 V
Min. input voltage	65 V
Feed-in start-up input voltage in grid operation [5)]	80 V
Max. input current PV 1 PV 2	 22.0 A 22.0 A
Max. short circuit current of module array ($I_{SC\ PV}$) PV 1 PV 2	 41.25 A 36 A

DC input data	
Max. total short circuit current of module array ($I_{SC\ PV1} + I_{SC\ PV2} = I_{SC\ max}$)	77.25 A
Max. inverter backfeed current to the array [3)] PV 1 PV 2	 41.25 A 36 A
Number of inputs - PV 1	2
Number of inputs - PV 2	2
Maximum capacity of the module array against earth	2000 nF
Insulation resistance test limit value between module array and earth (on delivery) [10)]	100 kΩ
Adjustable range of insulation resistance test between module array and earth [9)]	10-10,000 kΩ
Limit value and tripping time of the sudden residual current monitoring (on delivery)	30 / 300 mA / ms 60 / 150 mA / ms 90 / 40 mA / ms
Limit value and tripping time of the continuous residual current monitoring (on delivery)	300 / 300 mA / ms
Adjustable range of continuous residual current monitoring [9)]	30-300 mA
Cyclic repetition of the insulation resistance test (on delivery)	24 h
Adjustable range for the cyclic repetition of the insulation resistance test	-

DC input data, battery	
Max. voltage	455 V
Min. voltage	150 V
Max. current	22 A
Max. output	9,999 W
DC inputs	1

AC input/output data	
Rated power (P_{nom})	9,999 W
Max. output power	9,999 W
Rated apparent power	9,999 VA
Nominal grid voltage	1 ~ NPE 220V / 230V / 240 V
Min. grid voltage	155 V [1)]
Max. grid voltage	270 V [1)]

AC input/output data	
Max. output current	45.45 A
Current (inrush) [6]	20 A / 1.3 ms
Nominal frequency	50/60 Hz [1]
Nominal frequency for Full Backup	53/63 Hz [1]
Initial short circuit alternating current / phase I_K	45.5 A
Total harmonic distortion	< 3 %
Power factor cos phi [2]	0.8-1 (adjustable)
Max. permitted mains impedance Z_{max} at PCC [4]	None
Maximum output fault current / duration	29 A / 3 ms

AC output data, PV Point / PV Point Comfort	
Max. output power	4133 W (for 5 s)
Rated power	3000 W
Nominal output current	13 A
Nominal grid voltage	1 ~ NPE 220 V / 230 V / 240 V
Nominal frequency	53/63 Hz [1]
Switching time	< 90 s
Power factor cos phi [2]	0-1

AC output data, Full Backup	
Max. output power	13,780 W (for 5 s)
Rated power	9,999 W
Nominal output current	43.5 A
Nominal grid voltage	1 ~ NPE 220 V 1 ~ NPE 230 V 1 ~ NPE 240 V
Nominal frequency for Full Backup	53/63 Hz [1]
Switching time	< 90 s
Power factor cos phi [2]	0-1

General data	
Maximum efficiency	97.3%
European efficiency ($U_{mpp\ nom}$)	97%
European efficiency ($U_{mpp\ max}$)	96.5%
European efficiency ($U_{mpp\ min}$)	96.6%
Self-consumption at night	9 W
Cooling	Controlled forced-air ventilation

General data	
Protection class	IP 66
Dimensions H x W x D	595 × 529 × 180 mm
Weight	23.5 kg
Inverter topology	Non-insulated transformerless
Permitted ambient temperature	-40 °C - +60 °C
Permissible humidity	0-100% (incl. condensation)
EMC emission class (according to IEC 61000-6-2, IEC 61000-6-3)	B
DC/AC overvoltage category (according to IEC 62109-1)	2 / 3
Pollution degree	2
Sound pressure	47 dB(A) (ref. 20µPa)
Safety class (in accordance with IEC 62103)	1

Protection devices	
DC isolation measurement [11)]	Warning / shutdown at R_{ISO} < 100 kOhm
Overload performance	Operating point shift, power limitation
DC disconnector	Integrated
RCMU [11)]	Integrated
RCMU classification	The software class of the safety platform(s) is specified as a class B control function (single channel with periodic self-test) according to IEC 60730 Annex H.
Active anti-islanding method	Frequency conversion method
AFCI	Integrated
AFPE (AFCI) classification (according to IEC 63027) [11)]	= F-I-AFPE-1-4-1 Full coverage Integrated AFPE 1 monitored string per input port 4 input ports per channel (MPP1: 2, MPP2: 2) 1 monitored channel

Data communication	
WLAN SMA-RP connection (**FCC ID:** QKWPILOT01 / **IC ID:** 12270A-PILOT01)	802.11b/g/n (WPA, WPA2) Frequency: 2.4 GHz
Ethernet (LAN)	RJ45, 10/100 MBit
Wired shutdown (WSD)	Max. 28 devices / WSD chain Max. distance between two devices = 100 m

Data communication	
Modbus RTU SunSpec (2x)	RS485 2-wire
Voltage level of digital inputs	Low: min. 0 V - max. 1.8 V High: min. 4.5 V - max. 28.8 V
Input currents of digital inputs	Depending on the input voltage; input resistance = 70 kOhm
Total power for digital output (internal supply)	6 W at 12 V (USB not connected)
Power per digital output (external supply)	1 A at >12.5 V - 24 V (max. 3 A in total)
Datalogger/web server	Integrated

WLAN

WLAN	
Frequency range	2412–2462 MHz
Channels / power used	Channel: 1–11 b,g,n HT20 Channel: 3–9 HT40 <18 dBm
Modulation	802.11b: DSSS (1 Mbps DBPSK, 2 Mbps DQPSK, 5.5/11 Mbps CCK) 802.11g: OFDM (6/9 Mbps BPSK, 12/18 Mbps QPSK, 24/36 Mbps 16-QAM, 48/54 Mbps 64-QAM) 802.11n: OFDM (6.5 BPSK, QPSK, 16-QAM, 64-QAM)

Technical data of surge protective device DC SPD type 1+2 GEN24

General data	
Continuous operating current (I_{cpv})	< 0.1 mA
Rated discharge current (I_n) - 15 x 8/20 µs pulses	20 kA
Lightning surge current (I_{imp}) Max. discharge capacity @ 10/350 µs	6.25 kA
Protection level (U_p) (star-shaped mounting)	4 kV
Short-circuit strength PV (I_{scpv})	15 kA

Disconnector	
Thermal disconnector	Integrated
External fuse	None

Mechanical properties	
Disconnection indicator	Mechanical indicator (red)

Mechanical properties	
Remote communication of the connection interruption	Output on the changeover contact
Housing material	Thermoplastic UL-94-V0
Test standards	IEC 61643-31 / DIN EN 50539-11 UL1449 ed.4 / VDE 0185-305-3 Bbl. 5

Explanation of footnotes

1) The values stated are defaults; the inverter is configured specifically to suit the requirements of the relevant country.
2) Depending on the country setup or device-specific settings (ind. = inductive; cap. = capacitive).
3) Maximum current from a defective PV module to all other PV modules. From the inverter itself to one PV side of the inverter, it is 0 A.
4) Guaranteed by the electrical configuration of the inverter.
5) For backup power mode (PV Point) without battery, a minimum voltage of 150 V is required.
6) Current peak when switching on the inverter.
7) The sum of the rated power per phase must not exceed the rated power of the inverter.
8) Valid for Fronius Primo GEN24 with battery connection and Fronius Primo GEN24 Plus.
9) Specified values are standard values; depending on the requirement and PV power, these values must be adjusted accordingly.
10) Specified value is a max. value; exceeding the max. value may negatively affect the function.
11) Software class B (single-channel with periodic self-test) per IEC 60730-1 Annex H.

Integrated DC disconnector

General data	
Product name	Benedict LS32 E 7905
Rated insulation voltage	1000 V_{DC}
Rated impulse withstand voltage	8 kV
Suitability for insulation	Yes, DC only
Utilisation category and / or PV utilisation category	In accordance with IEC/EN 60947-3 utilisation category DC-PV2
Rated short-time withstand current (I_{cw})	Rated short-time withstand current (I_{cw}): 1000 A
Rated short-circuit making capacity (I_{cm})	Rated short-circuit making capacity (I_{cm}): 1000 A

Rated operating current and rated breaking capacity				
Rated operating voltage (U_e)	Rated operating current (I_e)	$I_{(make)}$ / $I_{(break)}$	Rated operating current (I_e)	$I_{(make)}$ / $I_{(break)}$
≤ 500 V_{DC}	14 A	56 A	36 A	144 A
600 V_{DC}	8 A	32 A	30 A	120 A
700 V_{DC}	3 A	12 A	26 A	88 A
800 V_{DC}	3 A	12 A	17 A	68 A
900 V_{DC}	2 A	8 A	12 A	48 A
1000 V_{DC}	2 A	8 A	6 A	24 A
Number of pins	1	1	2	2

Circuit diagrams

Fronius Primo GEN24 and BYD Battery-Box Premium HV

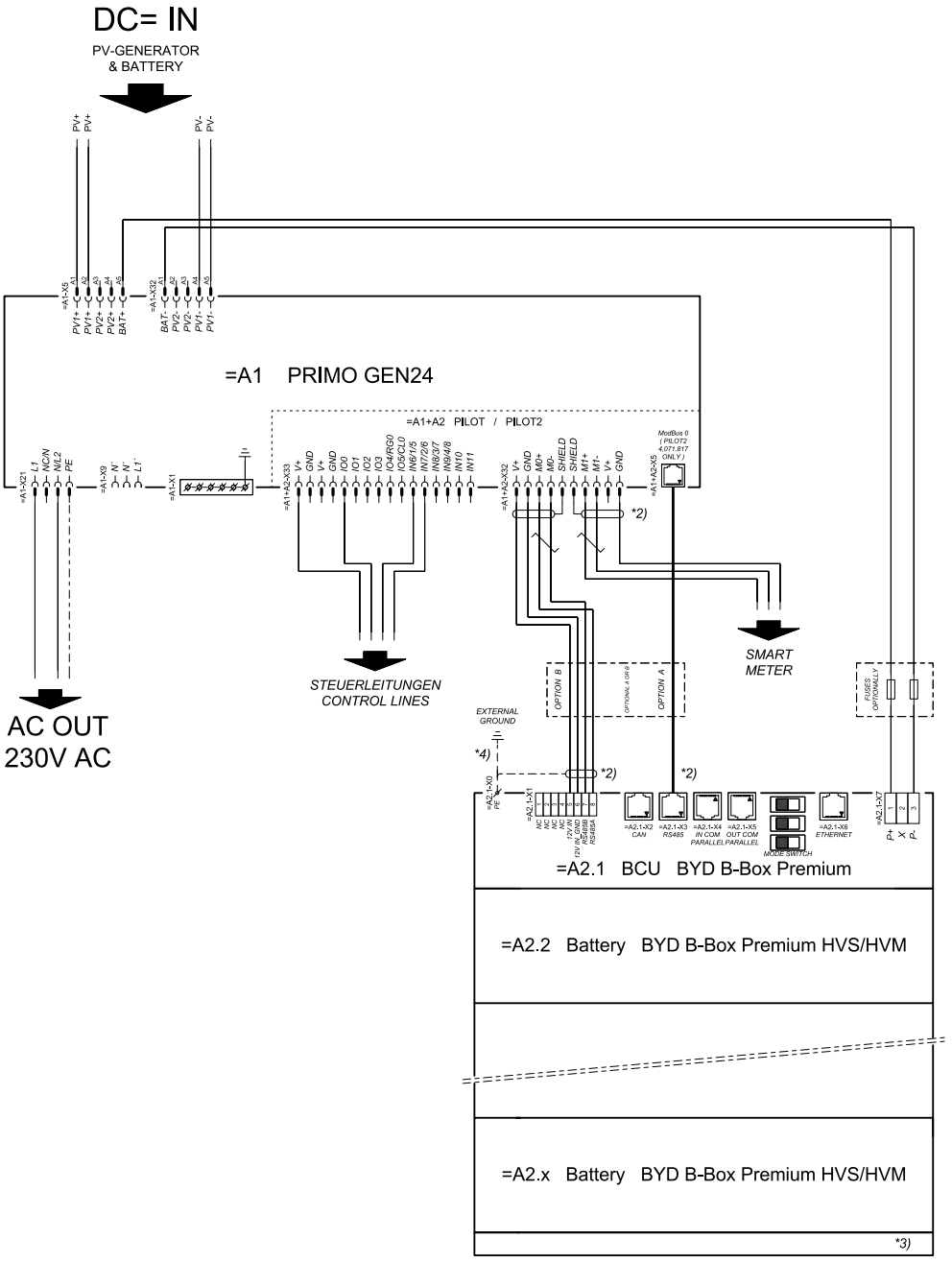

connection area at BCU:

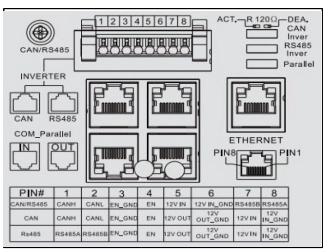

SYMBOL DEFINITION:

VERDRILLTE LEITUNG
TWISTED PAIR

2) DER MODBUS-KOMMUNIKATIONS-BUS ERFORDERT DEN ABSCHLUSS DER LEITUNGSENDEN MITTELS ABSCHLUSSWIDERSTÄNDE. DETAILS SIEHE WECHSELRICHTER-DOKUMENTATION.
THE MODBUS COMMUNICATION BUS REQUIRES THE TERMINATION OF CABLE ENDS WITH TERMINATION RESISTORS. DETAILS ACCORDING INVERTER MANUAL.

3) MIN/MAX ZULÄSSIGE MODULANZAHL
LAUT WECHSELRICHTER-DOKUMENTATION
MIN/MAX POSSIBLE NUMBER OF MODULES
ACCORDING INVERTER MANUAL

4) DEN QUERSCHNITT DER ERDUNGSLEITUNG AUS DER DOKUMENTATION DER BYD BATTERY-BOX PREMIUM ENTNEHMEN (-> 10 MM²)
REFER PE CABLE CROSS-SECTION ACCORDING TO BYD BATTERY-BOX PREMIUM MANUAL (-> 10 MM² / AWG7)

Fronius Primo GEN24 with two BYD Battery-Box Premium HV connected in parallel

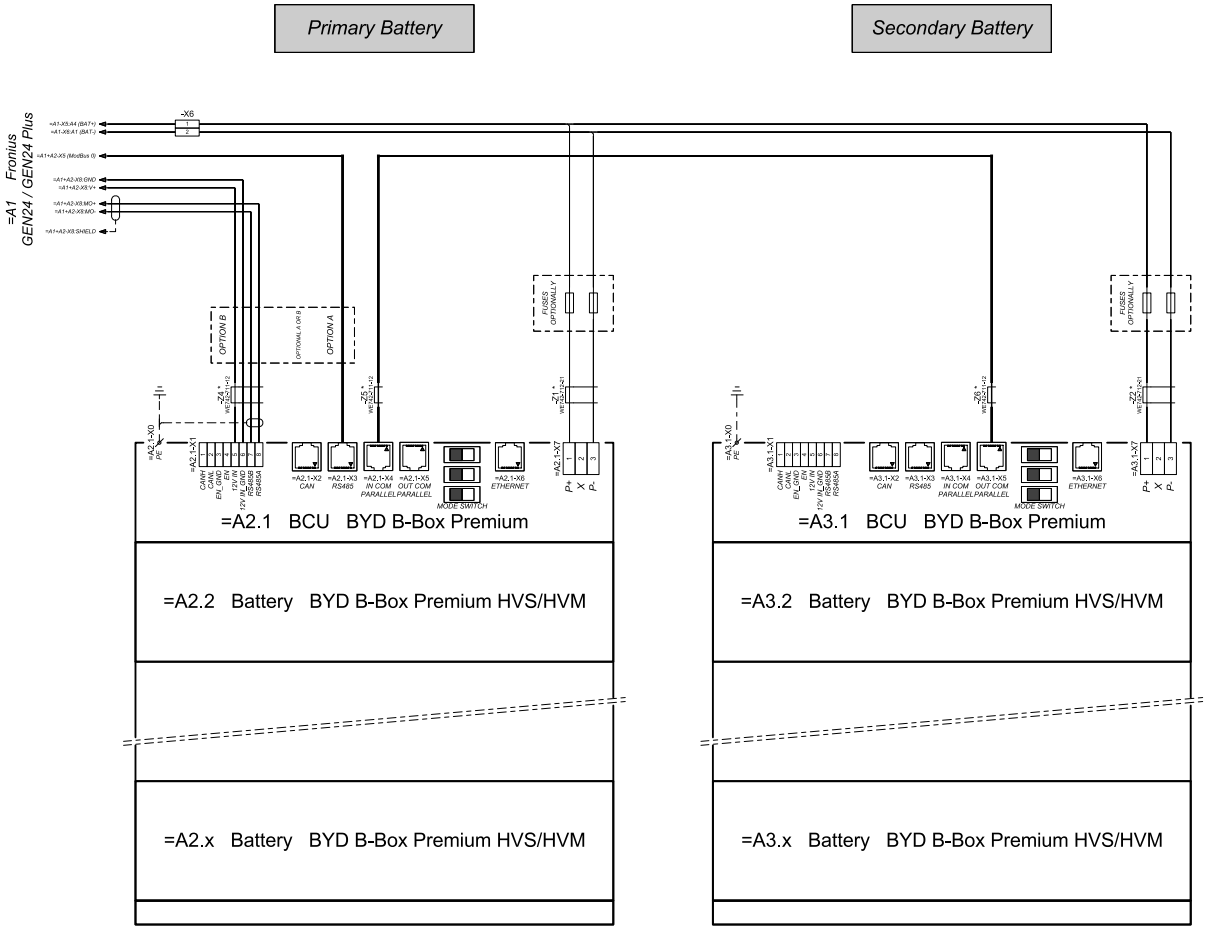

connection area at BCU´s:

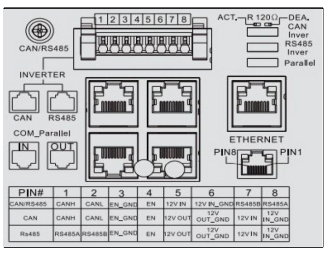

*
The ferrite cores -Z1 to -Z8 are only mandatory for storage installations in Italy!
Certified ferrites for DC connection path: -Z1 and -Z2: WE742-712-21, manufacturer: Würth
Certified ferrites for communication connection: -Z4 to -Z6: WE742-711-12, manufacturer: Würth

Fronius Primo GEN24 with three BYD Battery-Box Premium HV connected in parallel

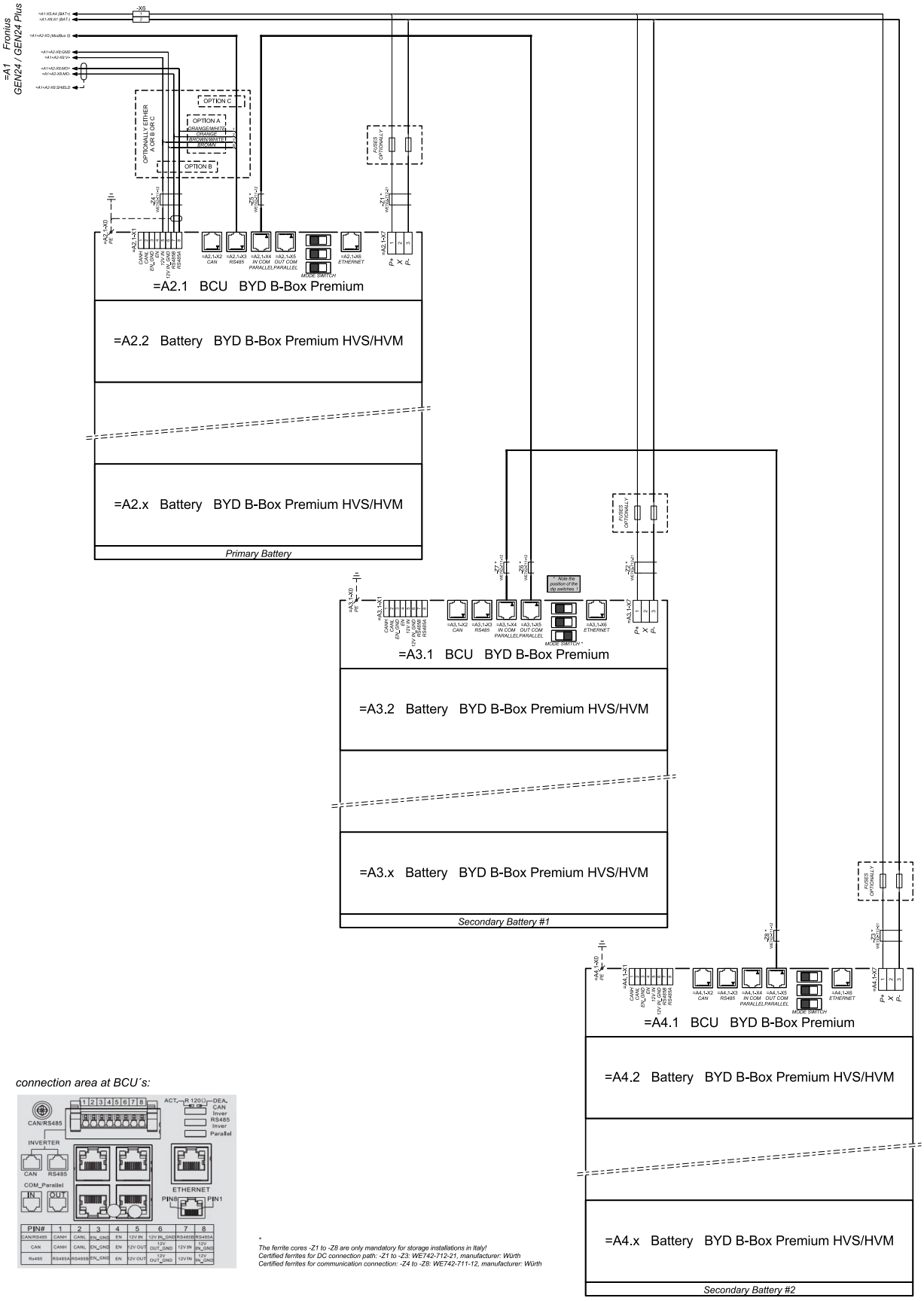

connection area at BCU´s:

The ferrite cores -Z1 to -Z8 are only mandatory for storage installations in Italy!
Certified ferrites for DC connection path: -Z1 to -Z3: WE742-712-21, manufacturer: Würth
Certified ferrites for communication connection: -Z4 to -Z8: WE742-711-12, manufacturer: Würth

Fronius Primo GEN24 and LG FLEX

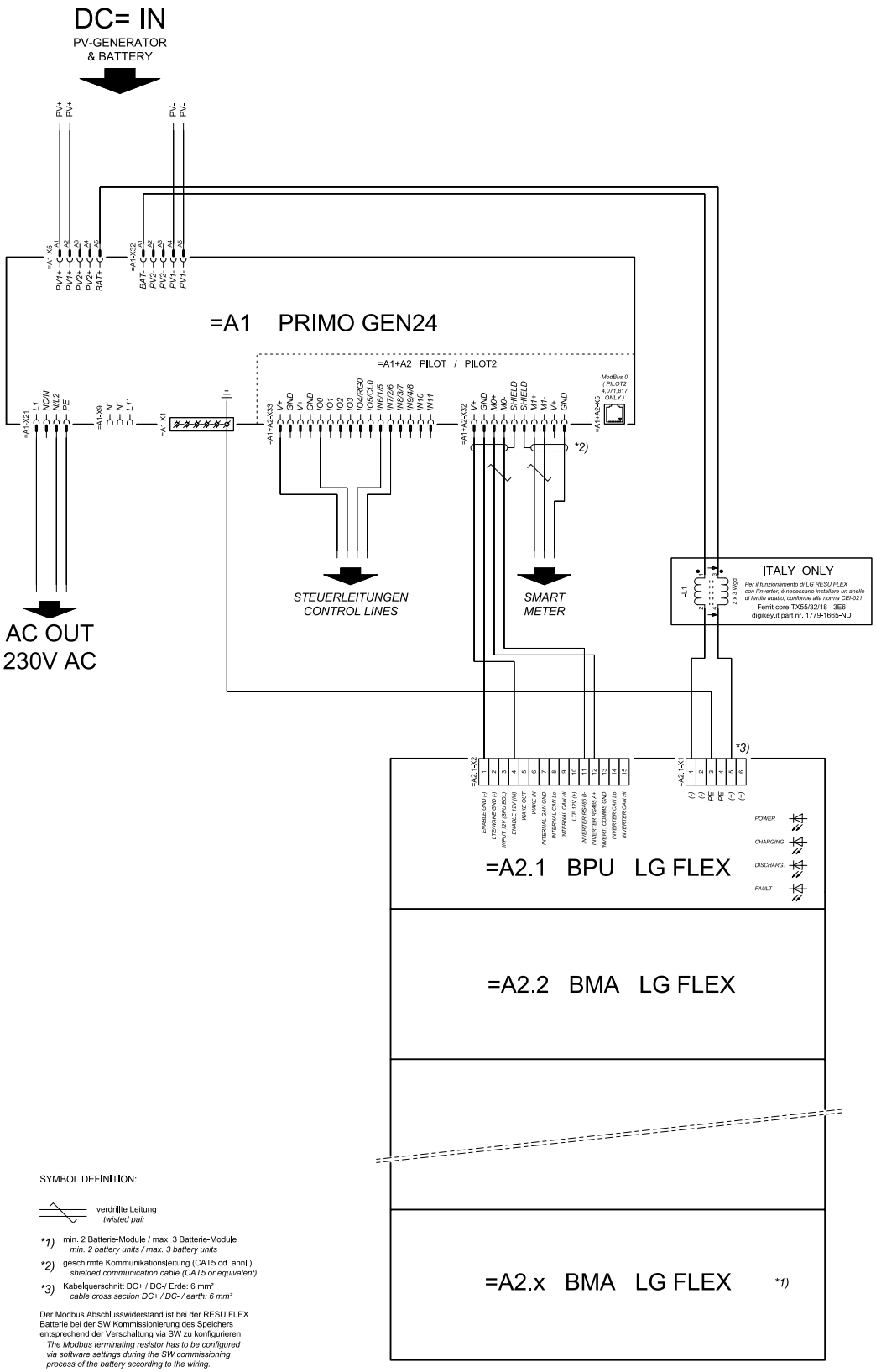

Circuit Diagram - PV Point (OP)

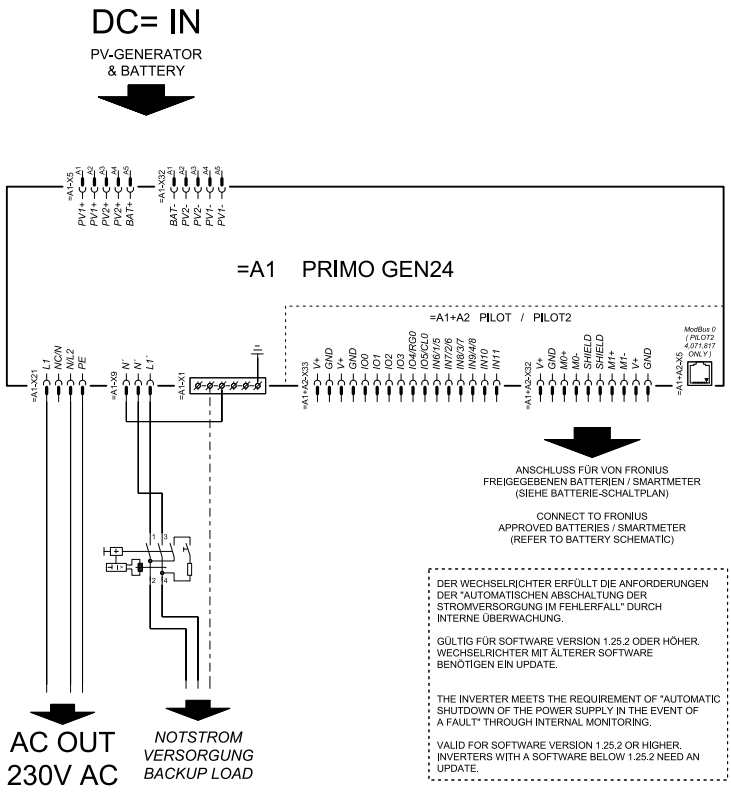

Circuit Diagram - PV Point (OP) Australia

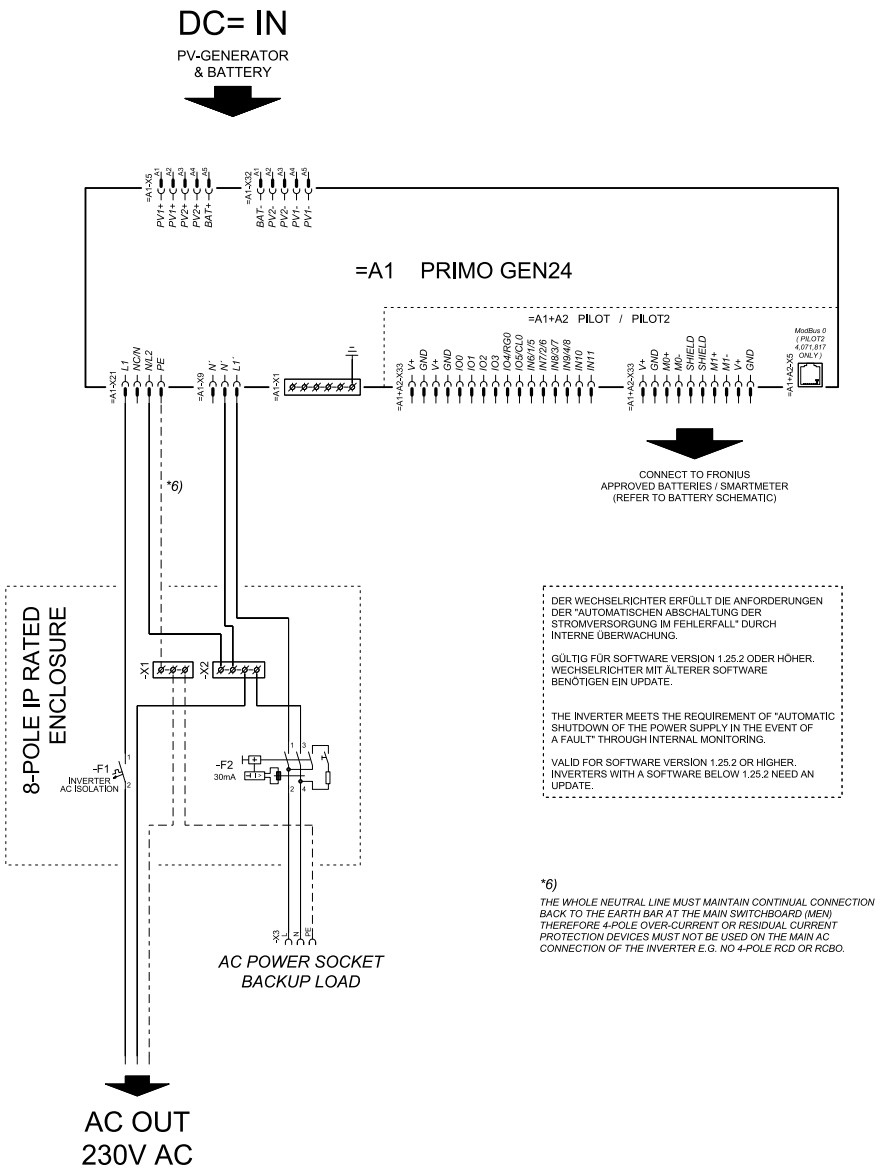

Backup power terminal - PV Point (OP) with battery only for France

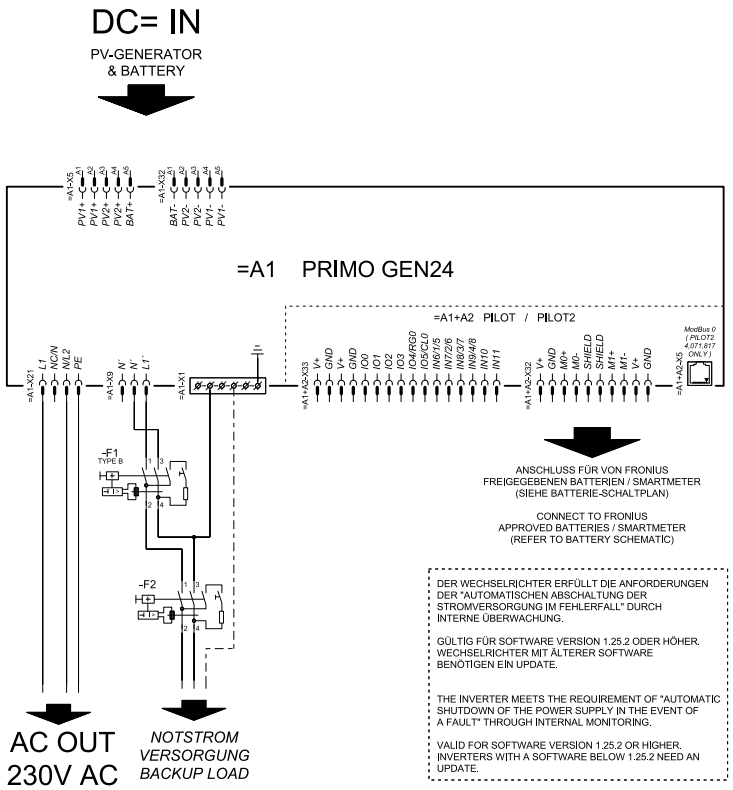

Backup power terminal - PV Point (OP) manual changeover

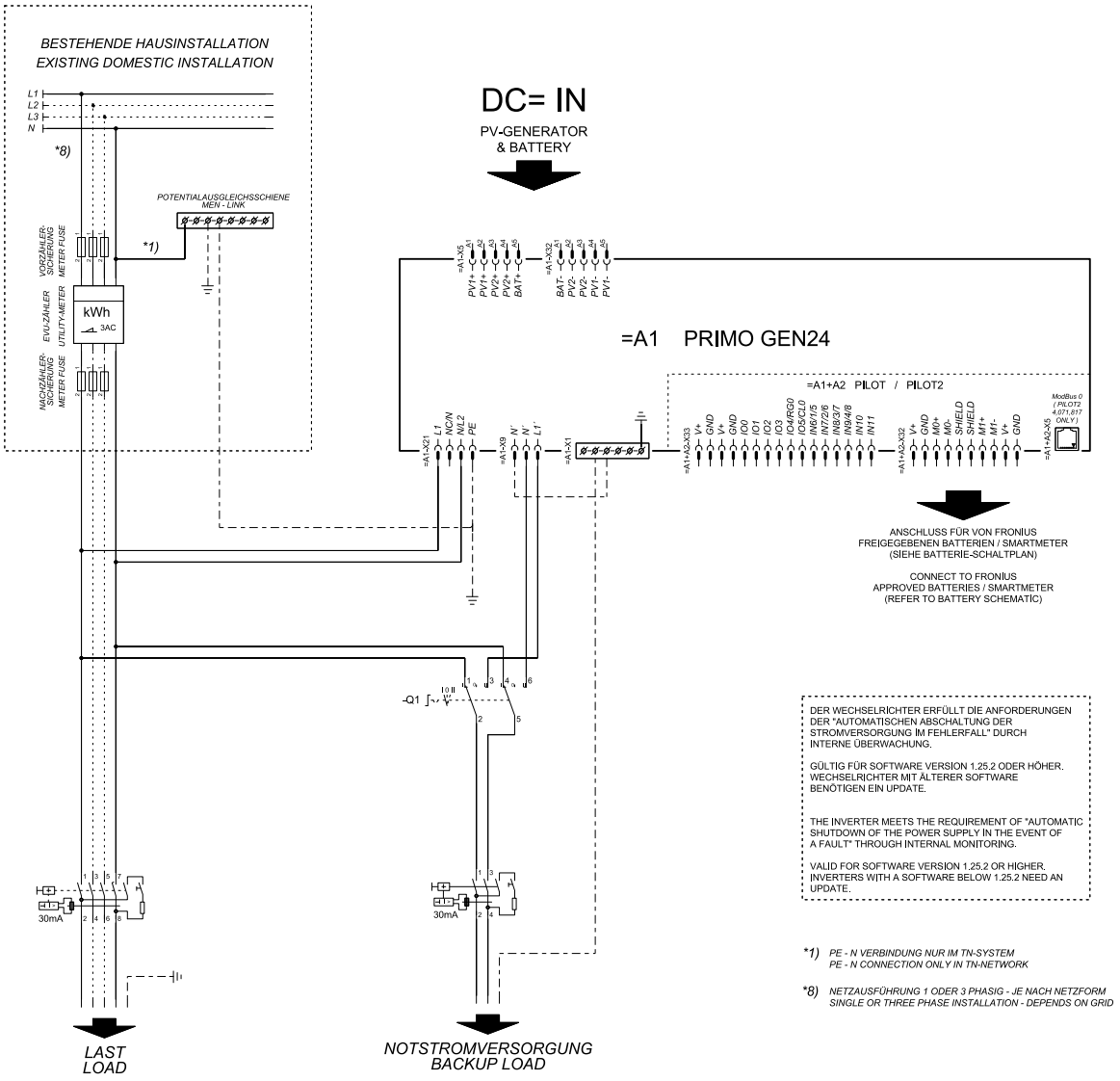

PV Point Comfort

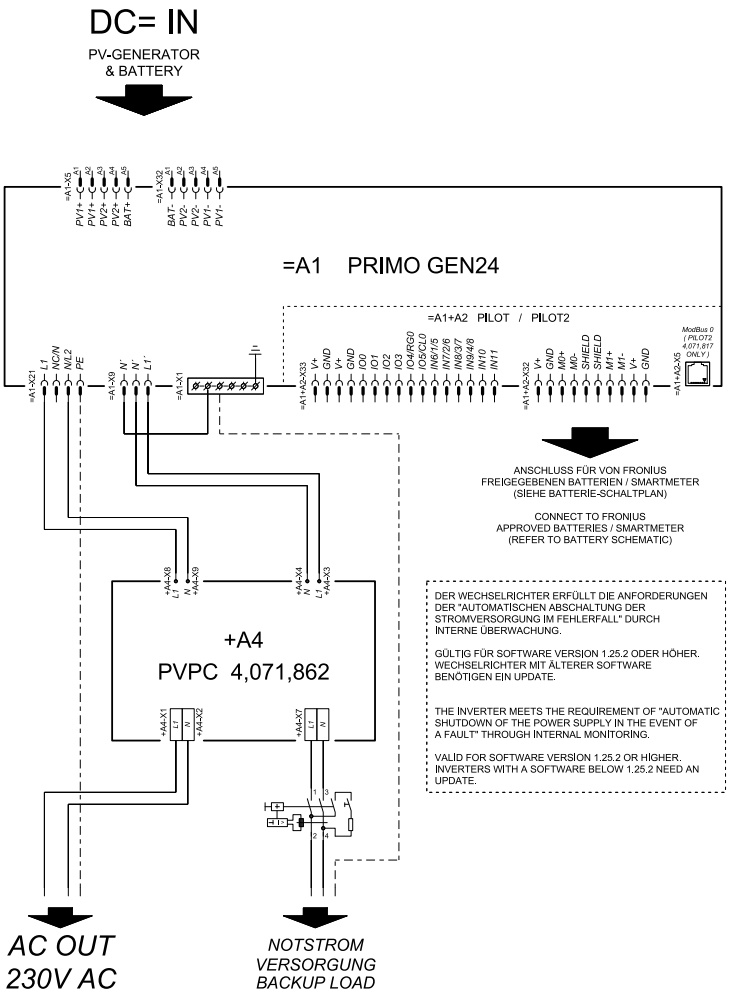

Automatic switch to backup power 1-pin single separation - e.g. Austria

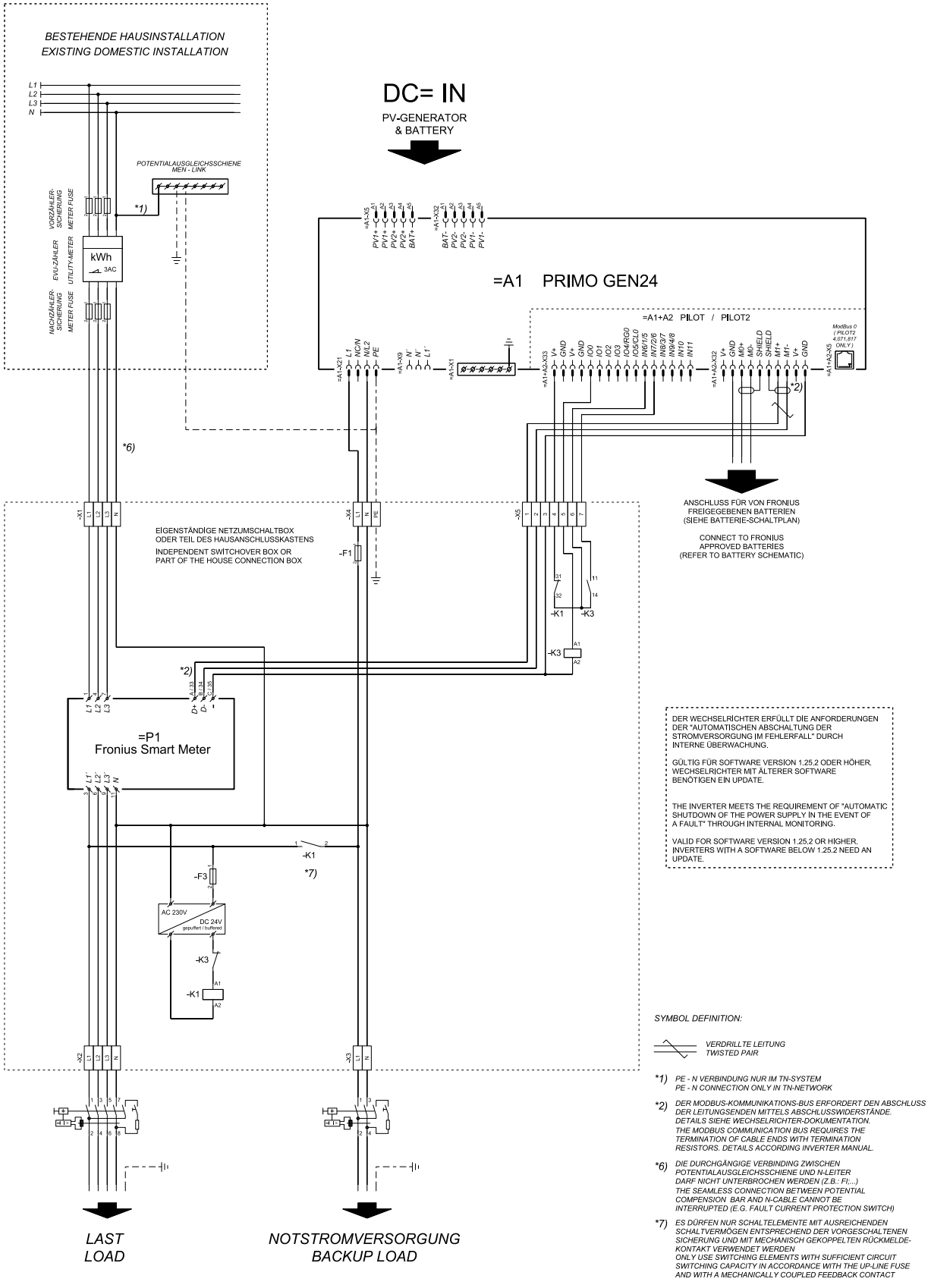

Automatic switch to backup power 1-pin single separation - e.g. Australia

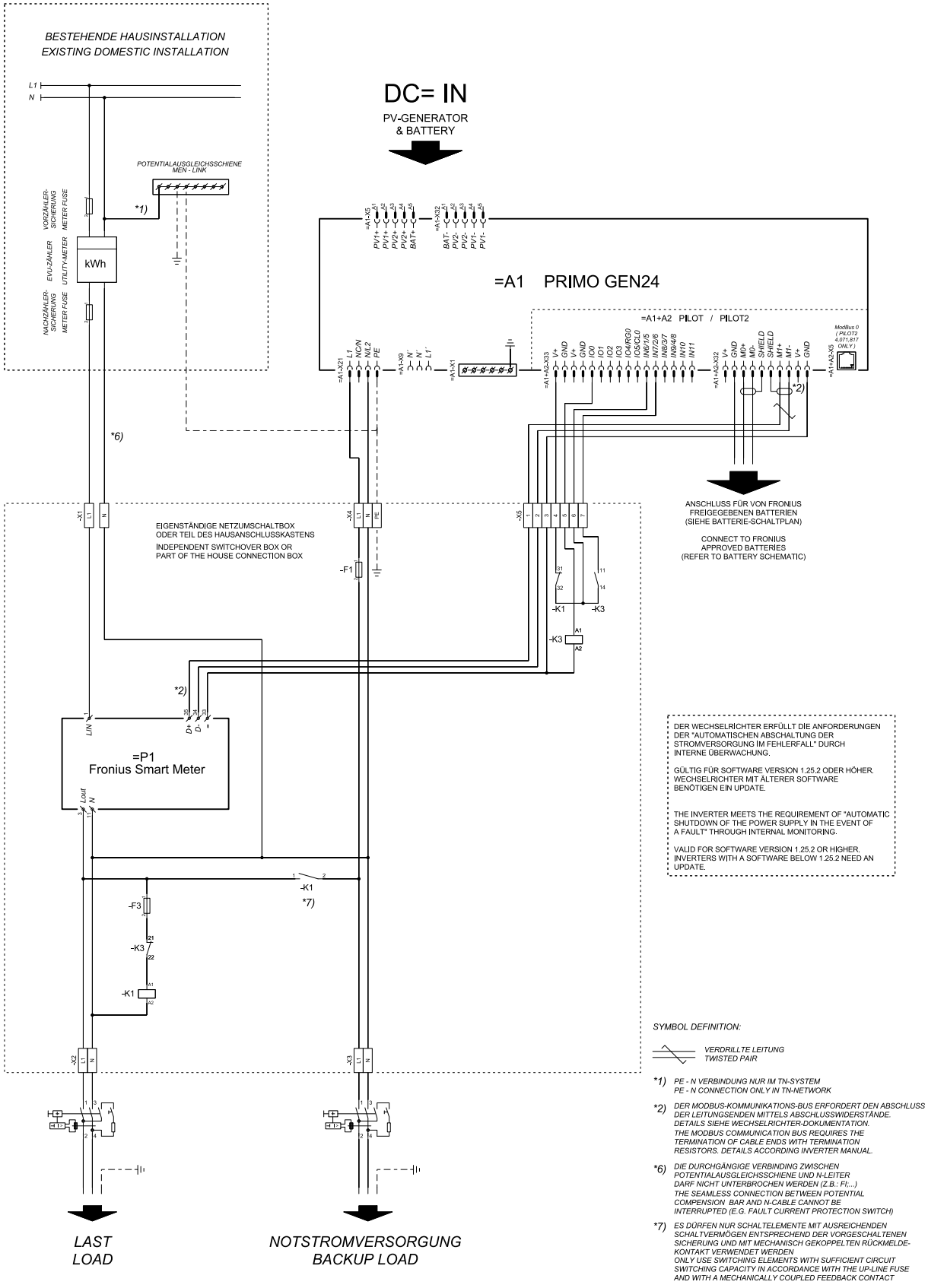

Automatic switch to backup power 2-pin single separation - e.g. Germany

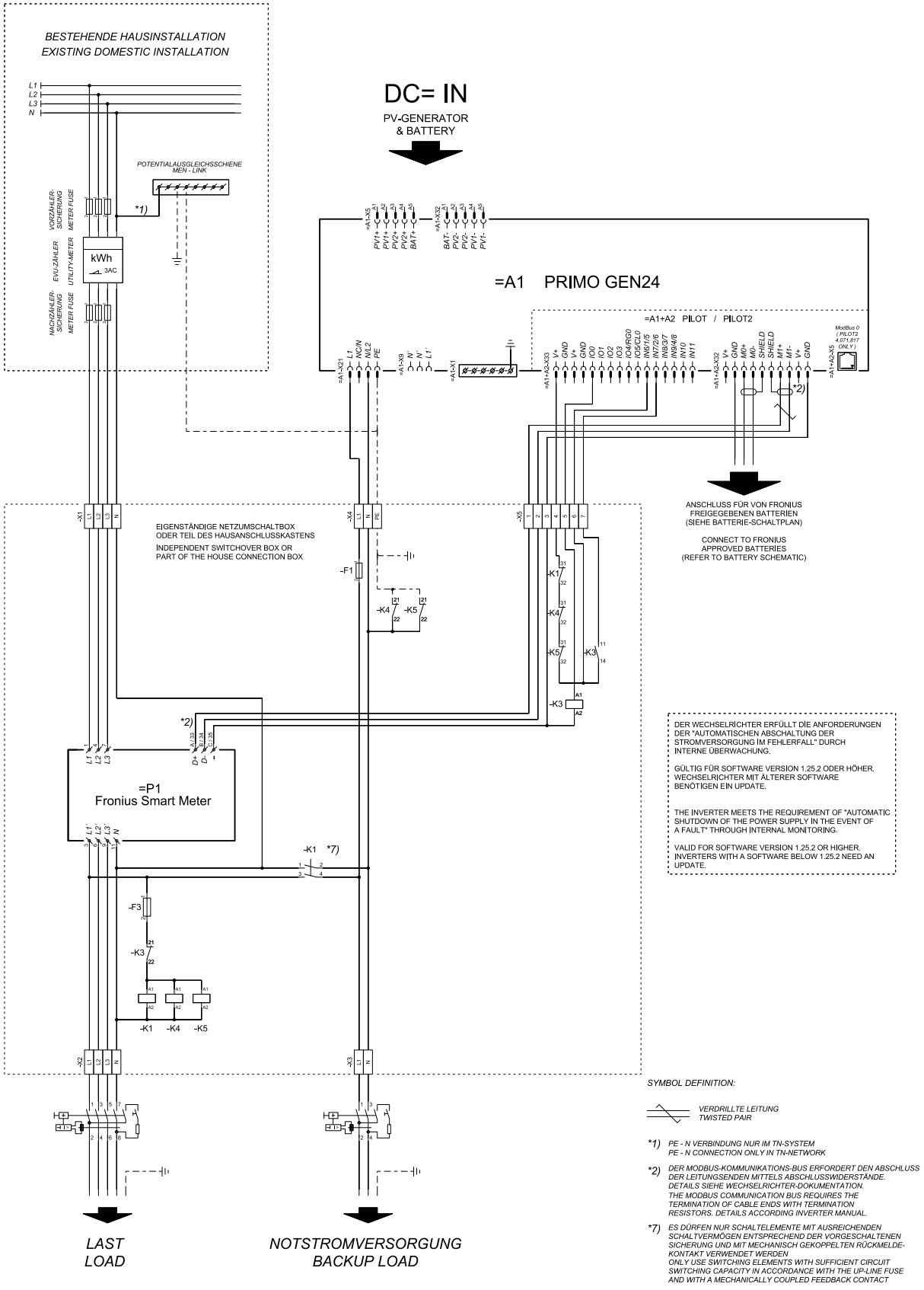

Automatic switch to backup power 2-pin single separation - e.g. France

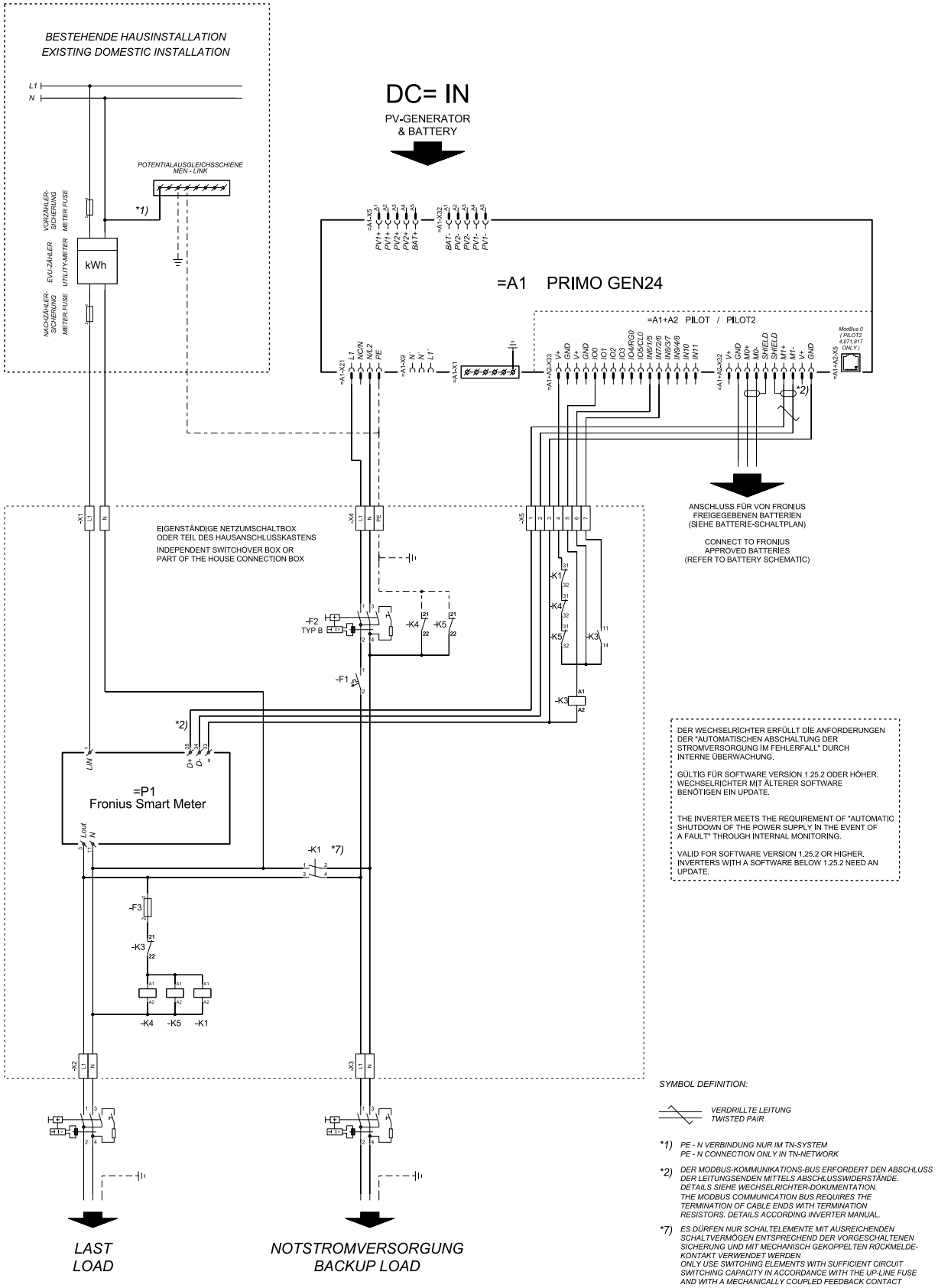

Automatic switch to backup power 2-pin single separation - e.g. UK

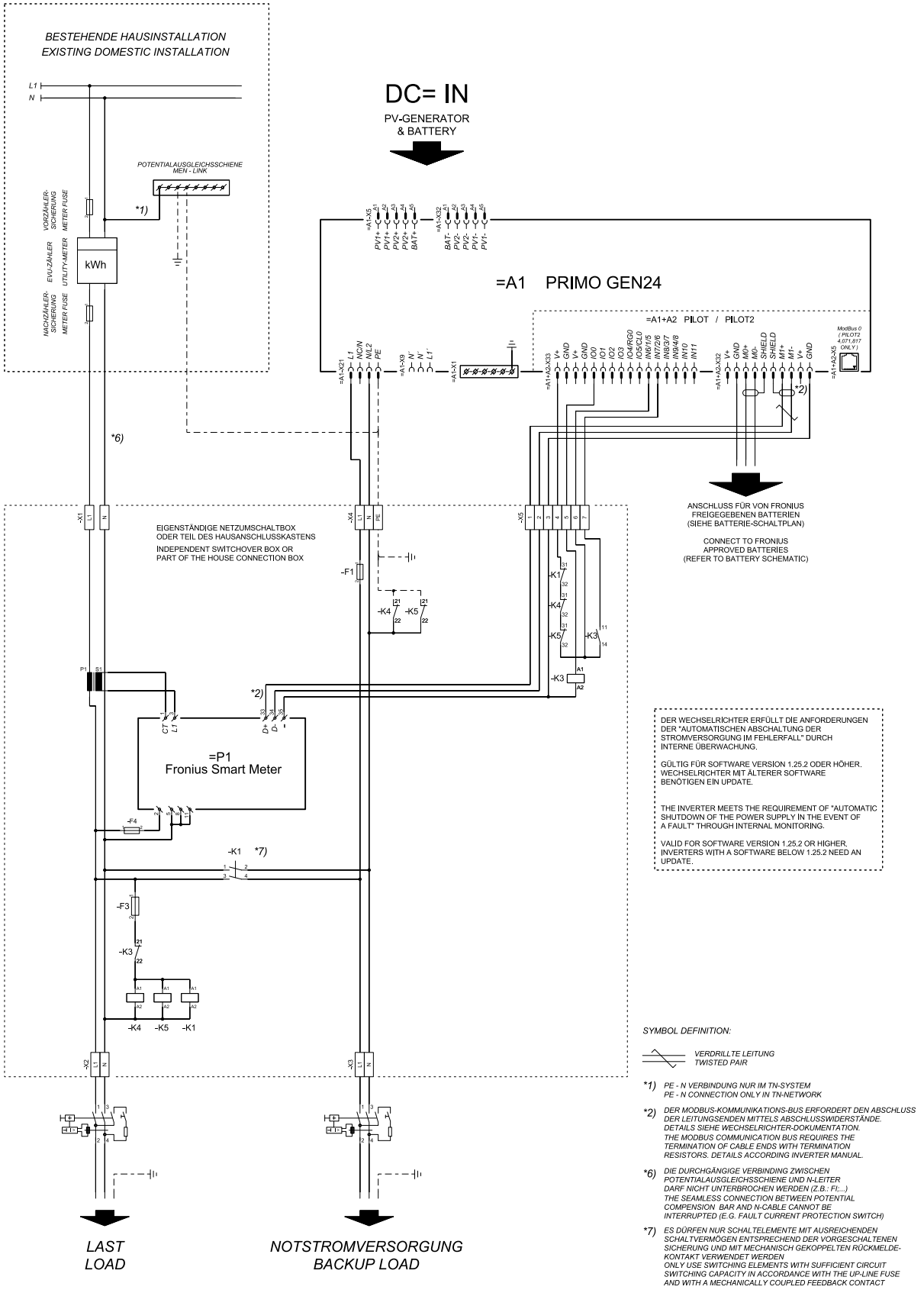

Automatic switch to backup power 2-pin single separation - e.g. Spain

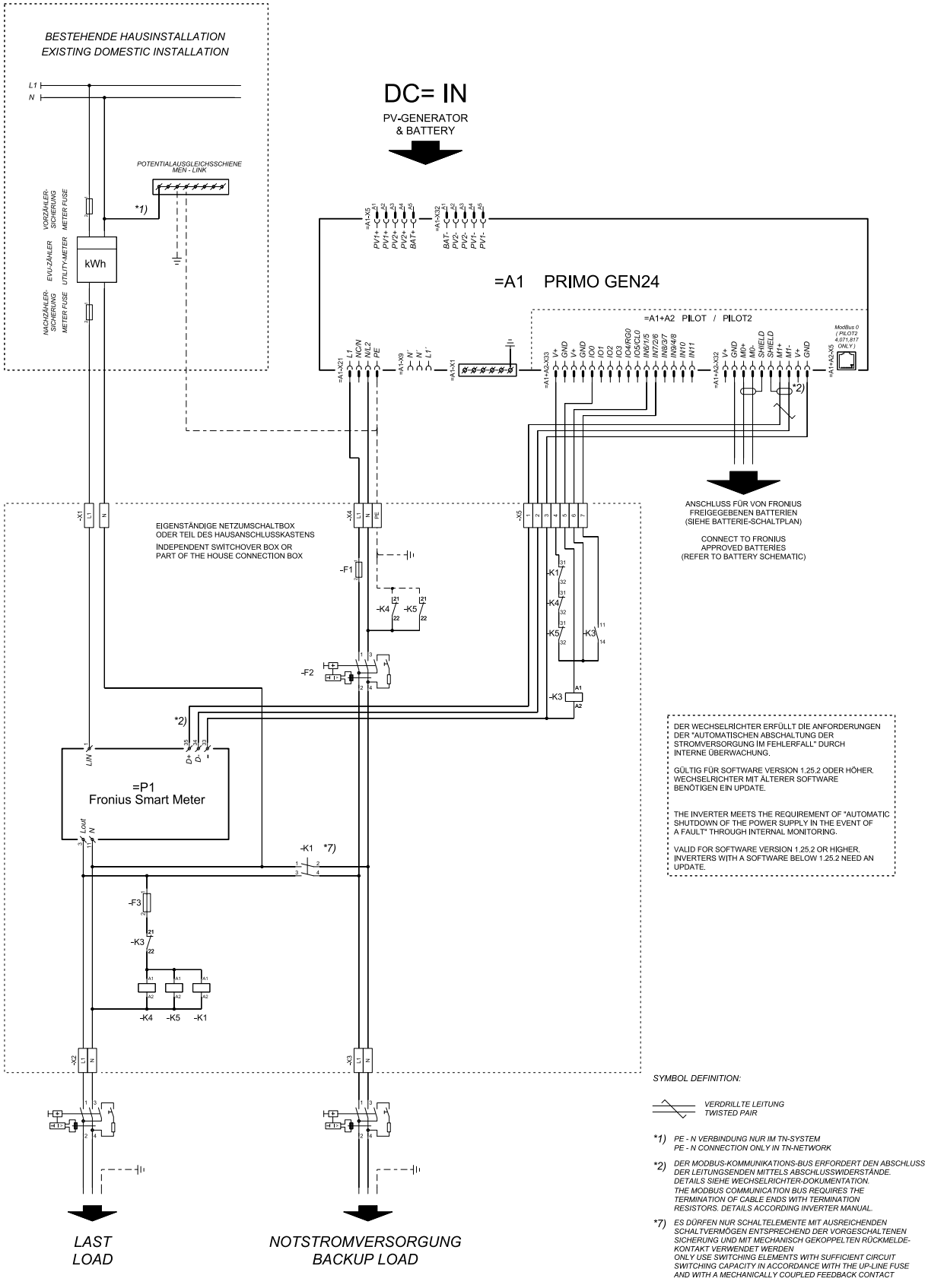

Automatic switch to backup power 2-pin double separation with ext. grid and system protection - e.g. Italy

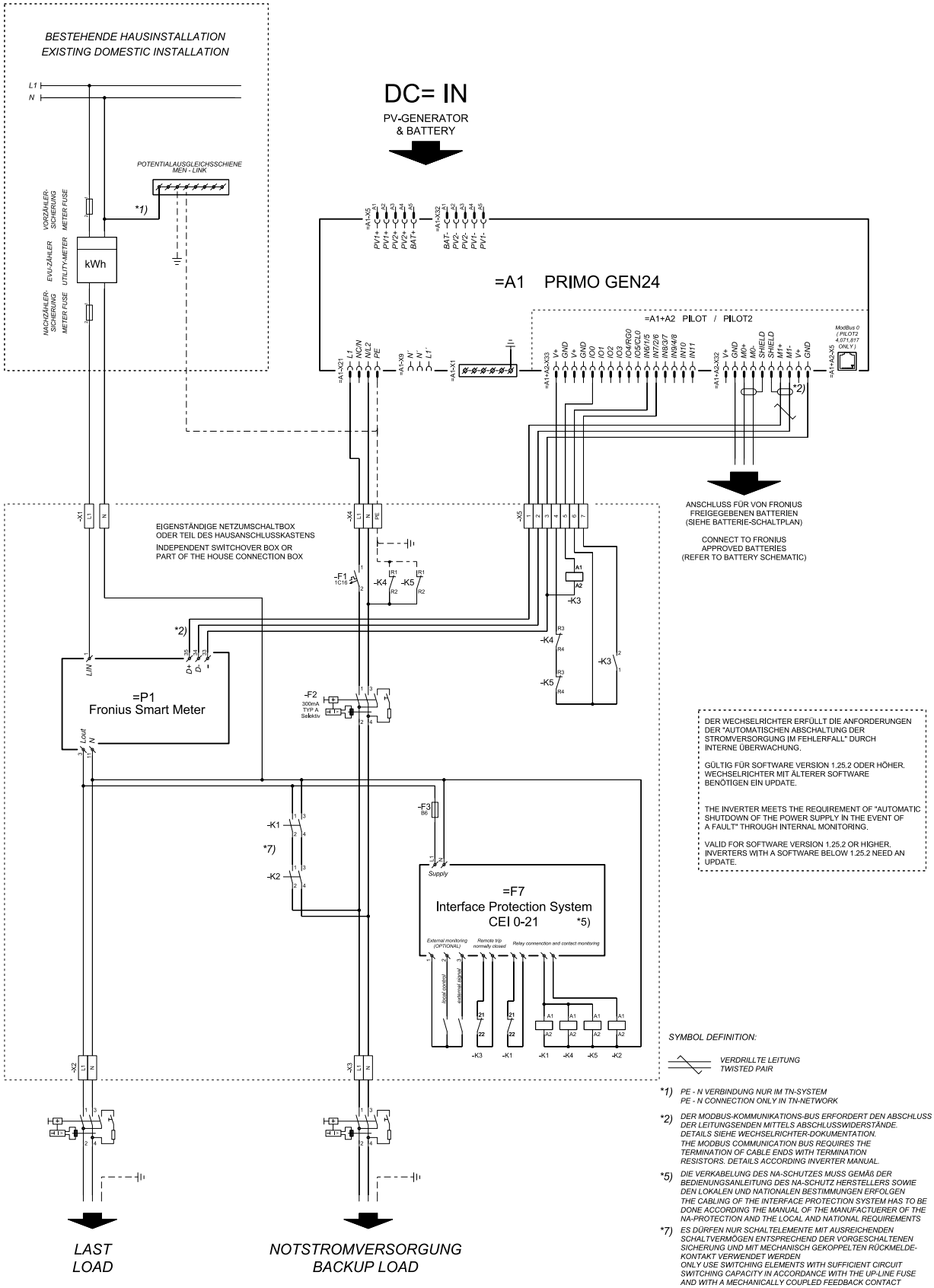

Fronius Primo GEN24 with Enwitec Box

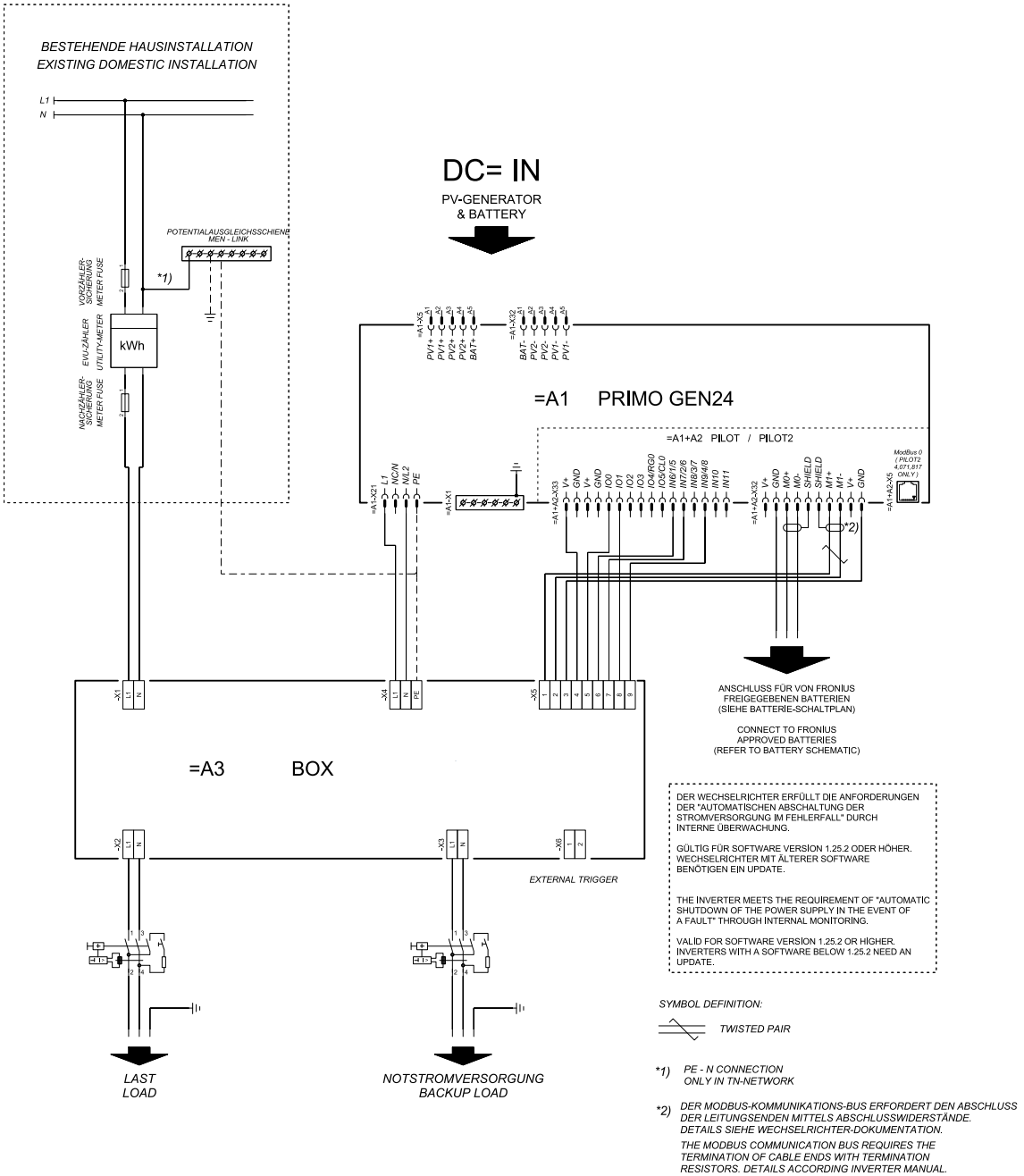

Manual switch to backup power 1-pin separation, e.g. Australia

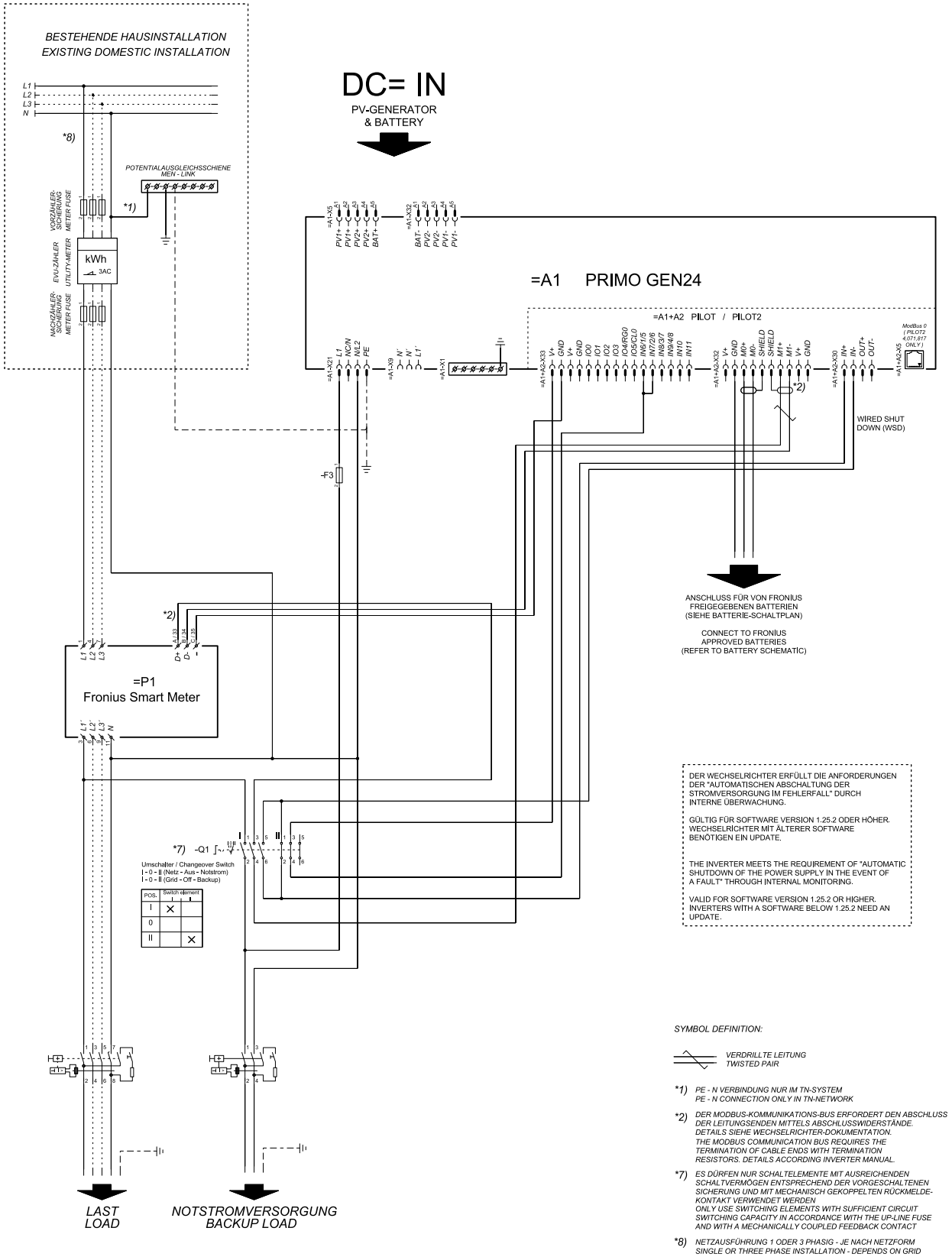

SYMBOL DEFINITION:

VERDRILLTE LEITUNG
TWISTED PAIR

*1) PE - N VERBINDUNG NUR IM TN-SYSTEM
PE - N CONNECTION ONLY IN TN-NETWORK

*2) DER MODBUS-KOMMUNIKATIONS-BUS ERFORDERT DEN ABSCHLUSS DER LEITUNGSENDEN MITTELS ABSCHLUSSWIDERSTÄNDE. DETAILS SIEHE WECHSELRICHTER-DOKUMENTATION.
THE MODBUS COMMUNICATION BUS REQUIRES THE TERMINATION OF CABLE ENDS WITH TERMINATION RESISTORS. DETAILS ACCORDING INVERTER MANUAL.

*7) ES DÜRFEN NUR SCHALTELEMENTE MIT AUSREICHENDEN SCHALTVERMÖGEN ENTSPRECHEND DER VORGESCHALTENEN SICHERUNG UND MIT MECHANISCH GEKOPPELTEN RÜCKMELDE-KONTAKT VERWENDET WERDEN
ONLY USE SWITCHING ELEMENTS WITH SUFFICIENT CIRCUIT SWITCHING CAPACITY IN ACCORDANCE WITH THE UP-LINE FUSE AND WITH A MECHANICALLY COUPLED FEEDBACK CONTACT

*8) NETZAUSFÜHRUNG 1 ODER 3 PHASIG - JE NACH NETZFORM
SINGLE OR THREE PHASE INSTALLATION - DEPENDS ON GRID

Manual switch to backup power 2-pin separation, e.g. Germany

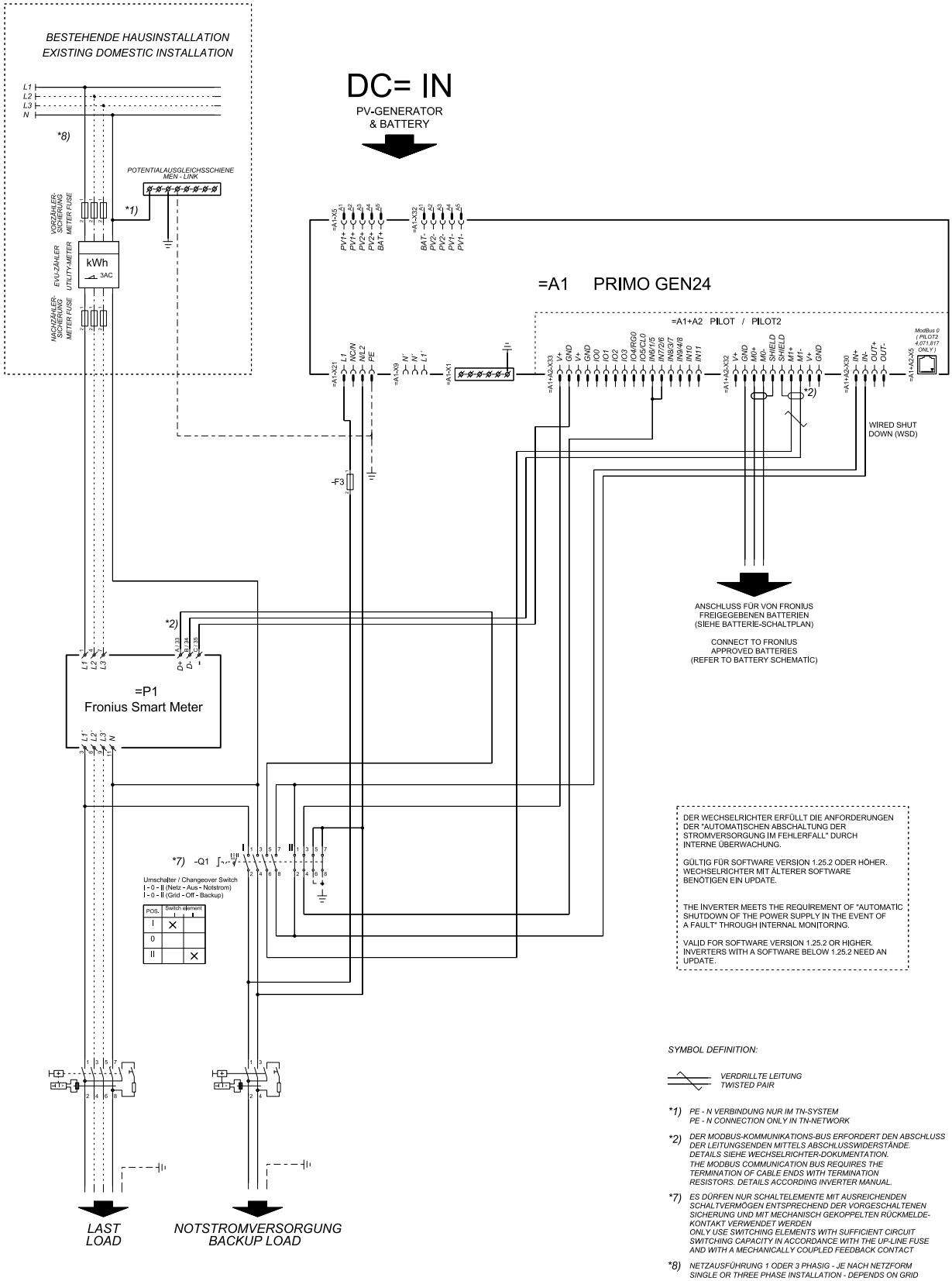

Surge protective device (SPD)

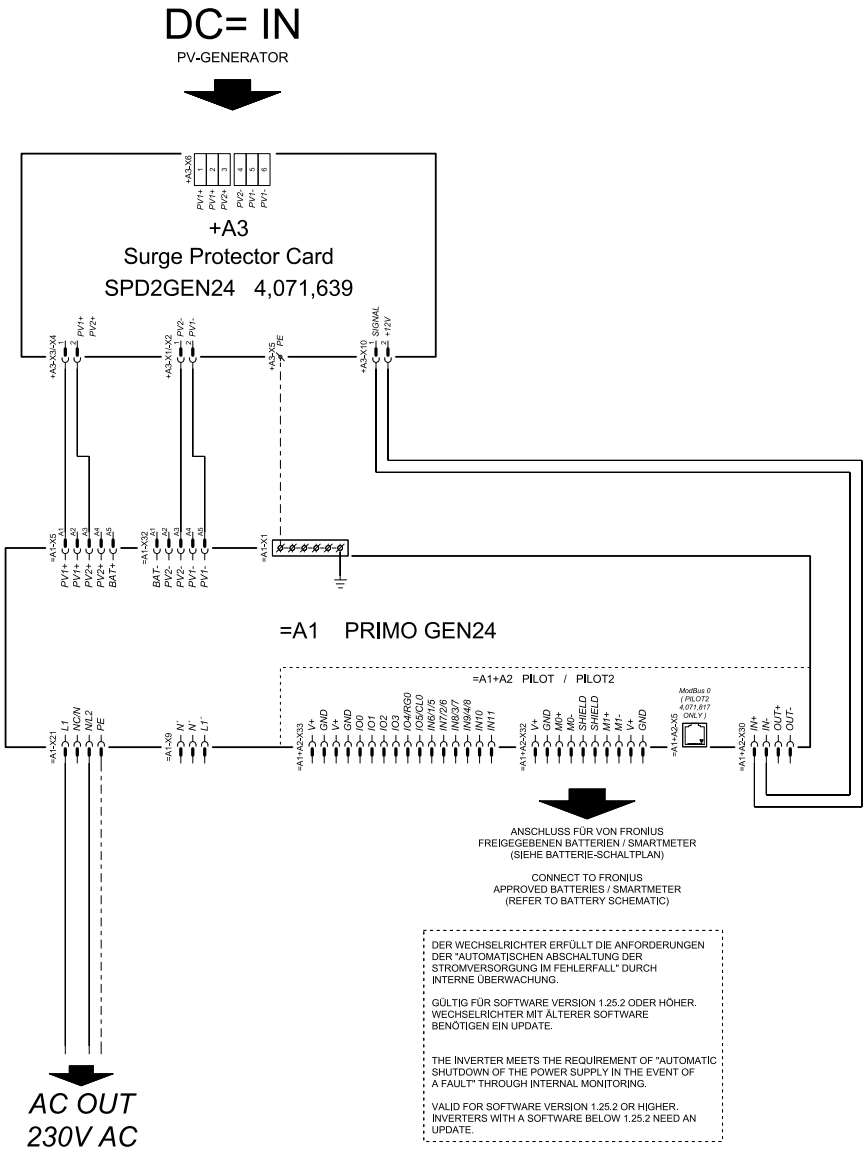

Dimensions of the inverter

Fronius Primo GEN24 8 - 10 kW

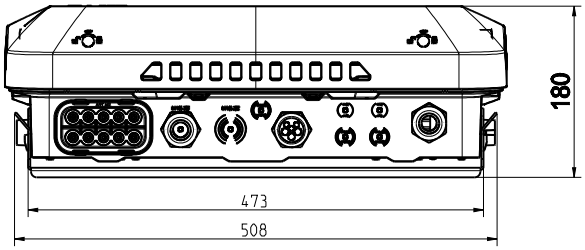

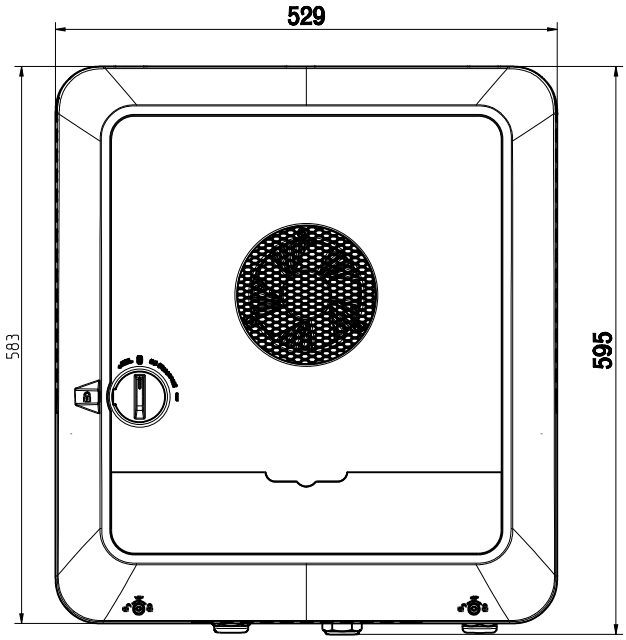

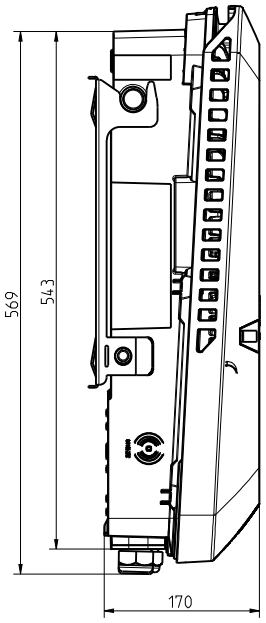

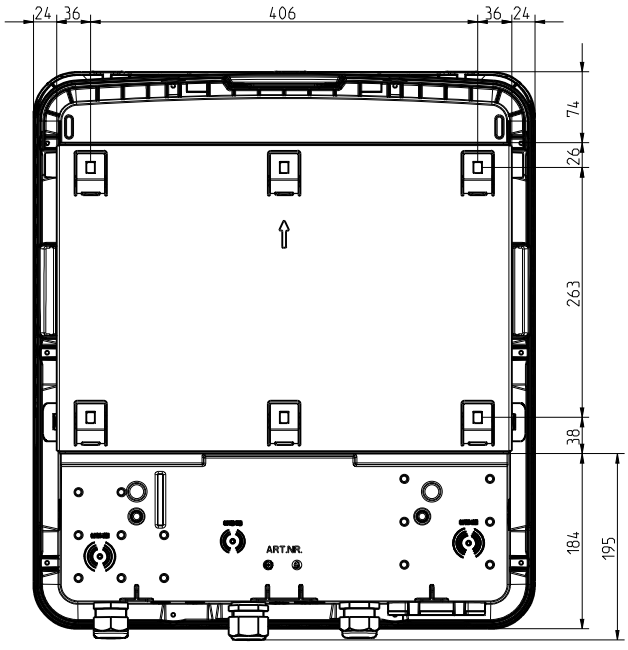



Fronius International GmbH
Froniusstraße 1
4643 Pettenbach
Austria
contact@fronius.com
www.fronius.com

At www.fronius.com/contact you will find the contact details of all Fronius subsidiaries and Sales & Service Partners.